Naval Submarine Medical Research Laboratory

NSMRL REPORT 1184 4 FEBRUARY 1993

THE EFFECTS OF DIGITAL SAMPLING RATE AND BIT QUANTIZATION ON PASSIVE AUDITORY SONAR TARGET DETECTION PERFORMANCE

J. S. Russotti
T. P. Santoro
T. E. Hanna
and
J. J. Wojtowicz

Released by
P. K. Weathersby, CAPT, MSC, USN
Commanding Officer
Naval Submarine Medical Research Laboratory

Approved for public release; distribution unlimited

The effects of digital sampling rate and bit quantization on passive auditory sonar target detection performance

J. S. Russotti, T. P. Santoro
T. E. Hanna, and J. J. Wojtowicz

Naval Submarine Medical Research Laboratory
NSMRL Report 1184

Naval Medical Research and Development Command
Work Unit 65856N - M0100.001-5051

Approved and Released by

P. K. Weathersby
Commanding Officer

Approved for public release; distribution unlimited

SUMMARY PAGE

PROBLEM

To determine critical parameters for digital presentation of audio in passive broadband sonar systems.

FINDINGS

There was a systematic degradation in aural detection performance when highly trained sonar operators were asked to detect more coarsely digitized target/noise signals. Nine combinations of sample rate and bit quantization were compared to one another and against a baseline of high quality digital processing. Detection performance, averaged across a representative sample of 15 sonar targets, was reduced from -12.4 dB at 48 kHz, 16-bit sampling to -7.1 dB at 3.125 kHz, 4-bit sampling.

APPLICATION

Advanced auditory sonar system design.

ADMINISTRATIVE INFORMATION

This research was carried out under Naval Medical Research and Development Command Work Unit No. 65856N - M0100.001-5051, "(U) Digital signal processing for auditory sonar." The views expressed in this report are those of the author and do not reflect the official policy or position of the Department of the Navy, Department of Defense, or the U.S. Government. It was approved for release on 3 Feb 93 and designated NSMRL Report No. 1184.

ABSTRACT

Modern signal-processing techniques have been applied in passive sonar to enhance sonar-operator performance for visually presented information. However, those same techniques degrade the auditory signal. These facts are surprising because, in many situations, such as the classification of transients and broadband signals with few tonal components, the sonar operator must rely heavily on auditory information. Therefore, it is important to ensure that the audio component of new sonar systems is not degraded by the use of inadequate digital techniques. This report describes our procedure for evaluation of digital sample rate and quantization and shows the significant degradation in detection performance as a function of both reduced sample rate and reduction in number of bits used to code signal amplitude.

THE EFFECTS OF DIGITAL SAMPLING RATE AND BIT QUANTIZATION ON PASSIVE AUDITORY SONAR TARGET DETECTION PERFORMANCE

Introduction

Sonar-operator performance on visually presented passive sonar contacts is enhanced by modern digital signal-processing techniques. However, the implementation of some of those same techniques has degraded the auditory signal. These facts are surprising because, in many situations, such as the classification of transients and broadband signals, the sonar operator must rely heavily on auditory information. Therefore, it is important to ensure that the audio component of new sonar systems is not degraded by the use of inadequate digital techniques. This report describes one step in the solution of that problem: an evaluation of the effect of digital sample rate and quantization on auditory detection performance.

Passive sonar systems are becoming completely digital. Digital beamforming has replaced large masses of hardware. The fact that digital processing now occurs nearly immediately after receipt of the signal by the hydrophones, makes preserving the quality of that digitally transformed signal essential. This point is a critical one for the future quality of auditory sonar. Digital sonar systems that have already been developed, provide audio signals of poor quality (Gersch, Russotti, & Kerivan, 1979; Russotti, 1987a, 1987b; Hanna, Russotti, & Marshall, 1987; Marshall & Nash, 1990). This degradation results from the fact that digital signals only approximate the true analog signal. Work by Nyquist (1928) on signal transmission using periodic discrete samples of a continuous signal, provides the basis for digital signal processing. Two mechanisms underlie the operation of all sampled data systems: the conversion (referred to as analysis) of a continuously varying signal, usually a varying voltage, into an ensemble of discrete numerical values and the synthesis of a continuous signal from a discrete numerical ensemble. The discrete nature of a numerical representation of the original continuous signal is the main potential source of problems limiting the validity of the representation, due to an inability to recreate a faithful reproduction of the original continuous signal. Since sampling yields a sequence of pulses that represent the amplitude of the signal at discrete intervals in time, the finer the increment in sampling, the more precisely the temporal changes in the original continuous signal can be resolved. Similarly, the precision with which the amplitude of each discrete sample is represented is critical to a faithful reproduction of the original. The precision in amplitude coding is commonly referred to as the degree of quantization of the signal. In digital signal processing, the number of bits assigned to coding each sample during analog-to-digital (A/D) conversion determines the number of discrete levels that can be assigned during any sample interval.

As applied in sonar system design, the poor quality of the digitally processed signal results from the fact that current digitization parameters are selected solely for their influence on visual displays. If future designs are not evaluated for audio quality, then parameters that were selected to efficiently optimize other important characteristics of the system will provide limited auditory information to the operator with no possibility of retrieving that lost information without major redesign.

We can ensure that system designers have the proper information for effective system design by evaluating the parameters essential to optimum human analysis of auditory signals. By specifying the performance characteristics associated with various parameters, we can ensure that future systems have sufficient audio quality to permit sonarmen to perform optimally. The purpose of the current research was to evaluate the effects of digital sample rate and bit quantization on auditory detection performance.

Method

Source Stimuli. Original analog target recordings were done on high quality 1/4" half-track tapes. The stimuli were a representative sample of 15 sonar contacts, chosen from a library of such contacts used extensively in our performance research on experimental displays (Russotti, 1987a, 1987b; Russotti & Wojtowicz, 1989). Background noise was modeled from analog sea-state 2 recordings measured on a B&K 2033 analyzer. The output of a General Radio model 1390-B white noise generator shaped by a GenRad 1500 1/3 octave multifilter was used to regenerate the model which was then digitized appropriately.

Subjects. Twenty-four highly trained sonar operator instructors were used as subjects. All had hearing within normal limits as measured by routine audiometry.

Experimental Design. Auditory detection of 15 sonar targets serially and randomly presented in sea-noise was investigated under normal and nine experimental conditions. In the normal presentation, the signal and the noise were digitized at a 48 kHz sample rate using 16-bit resolution for amplitude coding. These values are currently used in commercial professional applications including digital audio tape (DAT) recorders for extremely precise fidelity throughout the 20 Hz to 20 kHz bandwidth. In the experimental presentation, sample rates of 12.50 kHz, 6.25 kHz, and 3.125 kHz were employed in combination with either 12, 8, or 4-bit amplitude coding. All presentations were presented diotically (target and noise identical in both ears).

Subjects were randomly assigned to one of three groups, each group representing a different sample rate. Each subject was tested using a random order of the 15 targets, first with a 48 kHz sample rate with 16-bit coding. Then on subsequent days, subjects were presented a random order of the 15 targets, under one of the three randomly ordered conditions of bit resolution, all at the same sample rate.

Analog-to-Digital Conversion. The governing principle in sampled data systems derives from the Sampling Theorem of Nyquist (1928) and Shannon (1948). It states that in order to resolve the presence of a frequency, F, in a given test signal, one must sample that signal at a frequency of at minimum 2F. This cutoff is often referred to as the "Nyquist rate" and the process as "Nyquist sampling." For example, a sampling rate of 50 kHz will identify all frequencies present in the test signal up to and including 25 kHz. Less well known predictions of the sampling theorem involve the consequences of sampling and synthesizing frequencies above the 2F limit. Extraneous distortions categorized under the general term of "aliasing" result in both cases. Anti-aliasing filters (Moore, 1985; McGill, 1985) must be used at both A/D input (sampling) and digital to analog (D/A) output (synthesizing) locations to guarantee the integrity of the results. The bandwidth and roll-off of these filters must be selected according to the constraints of the Shannon theory; namely, that the filter's -3dB cutoff frequency be set at one-half the sample

rate or lower. In practice, the -3 dB cutoff frequency, F, is set even more conservatively; the sample rate is commonly 2.5F.

The requirement for an upper cutoff frequency on the sampled signal creates interesting variations in the sampled waveform as a function of the particular shape of the sampling filter or "window" (Marple, 1987). Various input windows are available for sampled-data systems. Each offers advantages depending on the particulars of the actual waveform in question and the desired results. We selected a rectangular window for initial study as it is most generally used and has good overall performance characteristics.

The analog-to-digital converter (ADC) we used to process our analog signals, produce binary samples of the input waveform that are 16 bits wide, which makes available all integer values from 0 to $2^{16} - 1$ (65,535) thereby, allowing a dynamic input signal range of 1:65535 or 96 dB. Our ADC and digital-to-analog converter (DAC) devices run under control of a DEC PDP 11/23 computer. The memory capacity available for storing sampled data is about 8 megabytes (4 million samples). We sampled our original analog data at 50 kHz allowing an input epoch of about 80 s for each target sample.

Since sample quantization is the primary variable of interest in the current experiments, we decided that doing the actual conversions with the highest number of amplitude levels available and then decreasing the number of levels would be the most efficient and the fairest way of producing sample epochs that differed only in this parameter. It is a straightforward numerical exercise to generate a binary representation of a given 16-bit number with only 12 or 8 or 4 bits. The resulting loss in resolution through truncation is identical to that which would be suffered if the actual conversion were done at the given precision, but has the added advantage of providing data samples identical in the time domain.

Sample rate differences could not be obtained by simple digital manipulation of high sample rate data files; because of the confounding effect of aliasing, we had to repeatedly sample the same input waveform at each of the different sample rates of interest. In each case we used anti-aliasing filters with bandwidth adjusted according to the sampling theorem. A Wavetek 752A filter having a rejection rate of 115 dB/octave was used for all low-pass filtering. The full matrix of sample rates, filter bands, and quantization levels are shown in Table 1. As seen in Table 1, the 15 stimuli were sampled at rates of 50.00k, 12.50k, 6.25k, and 3.125k Hz. Although, for a given sample rate R, a 1/2 R cutoff is theoretically

Table 1. Matrix of test conditions for each of 15 stimuli

Sample Rate	Low Pass -3dB Downpoint	Quantization Bits		
50.00 kHz	20.0 kHz	16		
12.50 kHz	5.0 kHz	12	8	4
6.25 kHz	2.5 kHz	12	8	4
3.12 kHz	1.2 kHz	12	8	4

acceptable, in practice (McGill, 1985), something less is used. For example, at our highest sample rate, 50 kHz, we could theoretically resolve 25 kHz, but in fact used a low-pass filter with a 3dB-down point of 20 kHz. Similarly, 3dB-down points of 5.0 kHz, 2.5 kHz, and 1.2 kHz were used to filter signals sampled at 12.50 kHz, 6.25 kHz, and 3.125 kHz, respectively. For the 50.00 kHz sample rate, 16 quantization bits were assigned. Signals sampled at rates of 12.50 kHz, 6.25 kHz, and 3.125 kHz were each quantized at three levels of precision, 12, 8, and 4 bits.

Digital-to-Analog Conversion. Once the A/D sampling function was completed, we needed to reproduce continuous analog signals from the various sample sets. A DAC with a 16-bit word size was used to generate a continuous repetition of the digitized sample (sound file). By editing this data file, we located start and stop points on the sample signals at zero crossing, thereby eliminating on/off clicks and the need for slow rise/fall times at the splice in the looped sound file.

Stimulus Storage and Playback. Fifteen different target test stimuli were processed at three different sampling rates and three different quantization levels for a total of 135 test signals. A sea-state 2 background was similarly processed at each of the three different sampling rates and three different quantization levels. In addition, the 15 high-quality digital target recordings (at the 50 kHz sample rate using 16-bit quantization) served as pretest target stimuli to be presented with an equivalently processed sea-state 2 background recording. For testing, all D/A signals were re-recorded using the analog inputs of a high fidelity DAT recorder. We used a Sony Professional PCM-2500 DAT running at 48 kHz with 16-bit resolution conforming to AES Standards (1984), having a 2 Hz - 22 kHz ($\pm$ 0.5 dB) bandwidth and > 90 dB dynamic range, to record a 20-minute sample for each member of our test stimulus matrix. While this reduced the upper sampling frequency to 48 kHz, it still provided an adequate rate for our stimuli.

Test Apparatus. As shown in Figure 1, a 16-channel multiple target injector operated under the control of a Digital Equipment Corporation PDP 11-34 microcomputer. All targets were presented at a single pre-set bearing 0.00^{o}. Target signals were supplied from eight Sony model 2500 DATs. Background noise recordings were supplied from a separate Sony model 2500 DAT.

Target levels were always set at 0 dB S/N in a 0.1 to 8 kHz band. Conditions employing anti-aliasing cutoffs at frequencies less than 8k were all adjusted to correct for the reduction in RMS level caused by the reduced bandwidth. To accomplish this, the RMS level of attenuation produced by a given anti-aliasing filter was compensated for in the threshold S/N ratios.

Target level attenuation in either 1 dB or 3 dB steps was programmed through the multiple target injector to produce the appropriate negative S/Ns. A Grason Stadler model 829E electronic switch, under PDP-11 control, gated the target signal using a 25 ms rise/decay time.

The Sennheiser HD430 headset, which presented the acoustic signal, provided a good representation of the measured electrical stimulus. In the 100 Hz to 8 kHz region, total frequency response variation was approximately 8 dB (Russotti, et al., 1985). All test presentations were presented diotically (target and noise identical in both ears).

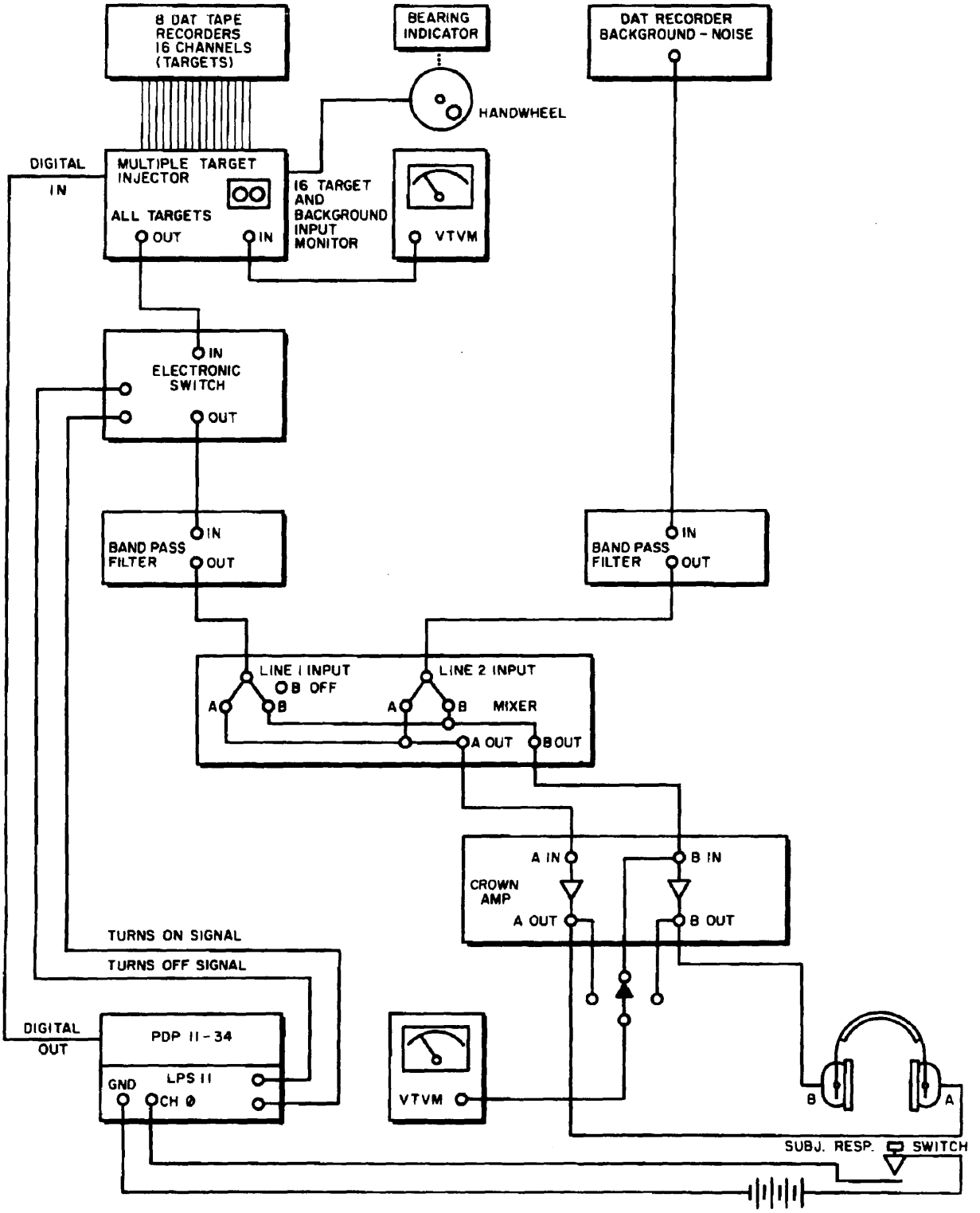

Figure 1. Test apparatus.

Test Procedure. The target detection threshold was estimated by rule using an adaptive tracking technique that was developed from the modified International Standards Organization threshold-tracking procedures described by Harris (1980).

The adaptive tracking technique used in threshold estimation required the subject to respond by pressing and releasing a button within specified time limits. Target on-time, including a 25 ms rise/decay time, was 3050 ms. This duration provided listeners with at least one complete period of target temporal changes for all 15 targets. Responses were evaluated using these temporal requirements:

(1) A button-press between 0 and 150 ms after the electronic switch (ES) turned "on" was ruled an invalid (premature) response.

(2) A button-press between 150 ms and 1035 ms from ES "on" was a valid "on" response.

(3) A button release prior to 3135 ms from ES "on" was an invalid response.

(4) A button release between 3135 and 3885 ms from ES "on" was a valid "off" response.

(5) Both the on- and off-responses had to be valid for that target to be scored "detected".

At the start of the trial, subjects heard the target played continuously at a 0 dB S/N ratio for a 20 s pre-test period. Then adaptive tracking testing began and the target was presented for detection at -10 dB S/N. If undetected, the target was raised 3 dB; if detected, it was attenuated an additional 3 dB. The 3 dB step size continued until the first reversal in the target-level adjustment. From this point, the step size was 1 dB. Threshold was the dB value half-way between successive reversals during a trial. From this, the absolute value of that threshold's deviation from the current trial accumulated mean was derived. The sum of these absolute values was used to determine the average deviation (AD) which had to be 2 dB or less. At the end of six thresholds, if the value of the AD exceeded 2, additional thresholds were measured until six successive thresholds yielded an AD of 2 dB or less. Once this criterion was met, the averaged threshold and AD were recorded for the completed trial. If after an additional two thresholds, the criterion was not met, testing was suspended and the subject re-instructed. A trial was also terminated and the subject re-instructed if the distance between successive reversals was greater than 10 dB.

Results and Discussion

Figure 2 presents average detection thresholds for the nine combinations of sample rate and bit quantization tested. A mixed design 3-way analysis of variance, Winer Case I (1962), showed a significant effect due to sample rate, $F(2,21) = 18.05$, $p < .0001$, and a significant effect due to bit quantization, $F(2,42) = 40.60$, $p < .0001$. There was an interaction between sample rate and number of bits used in amplitude coding, $F(4,42) = 2.82$, $p < .05$. This interaction is graphically depicted in Figure 3 which shows the effects of sample rate on detection. Each curve represents a different number of bits. As seen in this figure, the interaction between sample rate and number of bits occurs at the 8-bit quantization level (no interaction would be graphically seen as three parallel lines for the three bit-quantizations). There was a huge significant difference in detectability of targets, $F(14, 294) = 376.46$, $p < .0001$. This difference in detectability of targets interacted with sample rate,

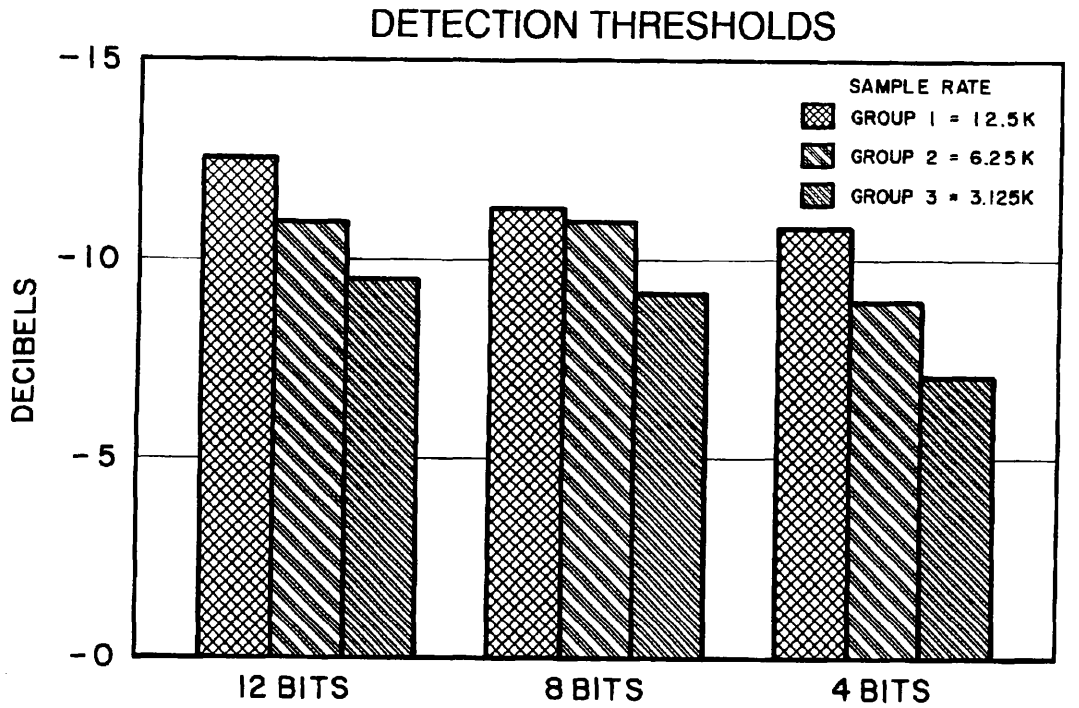

Figure 2. Detection thresholds obtained for the nine test conditions.

F (28, 294) = 22.71, $p < .0001$, and bit-quantization, F(28,588)=5.79, $p < .0001$.

Results of a 2-way analysis of variance to compare each group's pretest performance at the 48 kHz sample rate with 16-bit quantization, showed *no* significant difference among groups, F(2,21) = 2.94, p = .075. As a result of this similarity in performance we can combine pretest data for the three groups and also compare performance differences across groups. The averaged group detection performance at 48 kHz with 16-bit coding was -12.4 dB. As expected, these pretest data showed that there was a significant difference in detectability of individual targets, F(14, 294) = 146.08, $p < .0001$, which was why they were chosen as a representative sample, though these target differences were not significantly different from one group to another and produced no interactions, F(28, 294)=0.81.

Since the 48 kHz 16-bit condition was always presented as a preliminary training session, we would expect measured performance to be reduced somewhat from more practiced performance at that bit-quantization and sample rate. Despite this predicted reduction, *t* tests of individual differences showed that for all but the 12-bit 12.5 KHz sample rate, there was always a significant difference, $p < .05$, between detection performance at the 48 kHz, 16-bit condition and all eight remaining treatment conditions. At the 12.5 kHz sample rate shown as the cross-hatched bars in Figure 2, detection performance significantly dropped from -12.6 to -11.3 ($p = < .05$) as the number of bits was reduced from 12 to 8. A reduction to -10.8 dB at 4 bits, while significantly different from 12 bits ($p < .001$), was not significantly different from 8-bit performance at that sample rate.

At the 6.25 kHz sample rate, seen in Figure 2 as the broad striped bars, 12 bits and 8 bits produced detection thresholds of -10.9 and
-11.0 dB respectively, though there was a significant reduction in performance from both of these to -9.0 dB at 4 bits, $p < .01$.

At the 3.125 kHz sample rate, depicted in Figure 2 using narrow striped bars, the difference in detectability of -9.5 dB at 12 bits and -9.1 dB at 8 bits was not significant, though there again the significant degradation in performance to -7.1 dB occurred from both 12 and 8 to 4-bit quantization ($p < .0001$).

Since the pretest data analysis of variance produced no significant differences between the three groups and no interaction between the detectability of individual targets and groups, we can safely compare performance across sample rates. See Figure 3.

At 12-bit quantization, averaged detection performance dropped significantly from -12.6 dB at 12.5 kHz to -10.9 dB at 6.25 kHz ($p < .01$) and again dropped significantly from both of these to -9.5 dB at 3.125 kHz ($p < .001$). At 8-bit quantization, averaged detection performance remained unchanged at -11.3 and -11.0 dB respectively when 12.5 kHz and 6.25 kHz sample rates were employed, while a significant reduction in performance from both of these to -9.1 dB occurred at 3.125 kHz ($p < .01$). At 4-bit quantization, averaged detection performance dropped significantly from -10.8 dB at 12.5 kHz to -9.0 dB at 6.25 kHz ($p < .01$) and then again dropped significantly to -7.1 dB at 3.125 kHz ($p < .0001$).

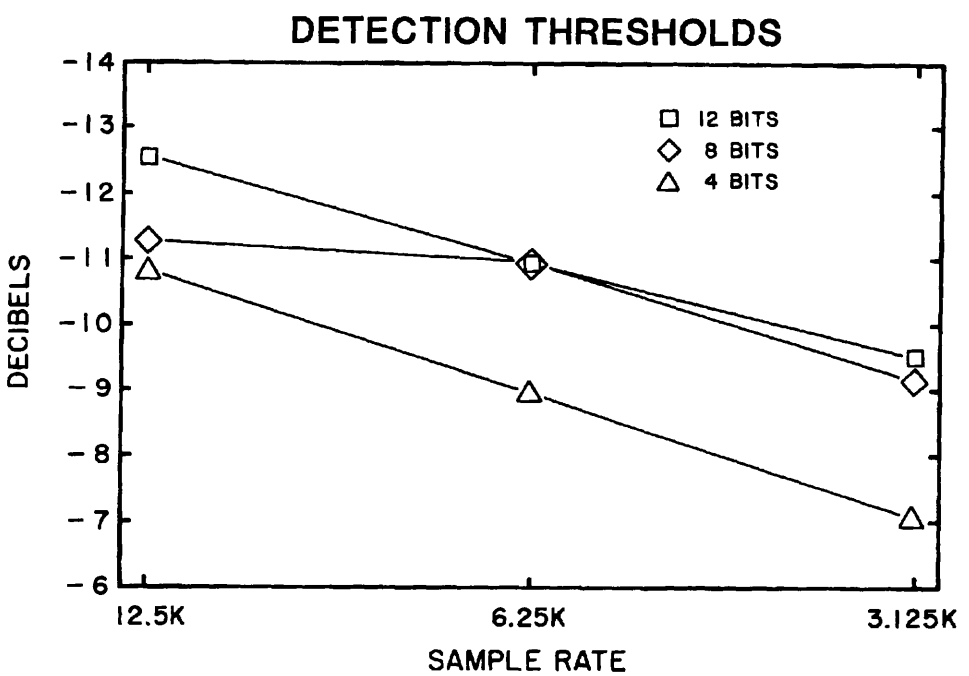

Figure 3. Effect of sample-rate on detection performance at the various levels of bit quantization.

Summary

These results show strong and statistically significant degradation in performance, from an average of -12.4 dB S/N across targets at 48 kHz sample rate using 16 bits, down to a low -7.1 dB target average at 3.125 kHz sample rate with 4-bit quantization.

These data strongly imply that the auditory detection performance of our sonar operators will be seriously limited by the failure to present optimal auditory information as a result of reduced sample rate and reduction in the number of bits used to encode amplitude. The degradation in performance by no means ends there however, since auditory target discrimination performance relies on these same auditory cues. We are in the process of measuring the effects of these same parameters on target discrimination performance and will report these in a follow-on study.

References

Audio Engineering Society. (1984). AES recommended practice for professional audio applications--preferred sampling frequencies. *Journal of the Audio Engineering Society, 32*(10), 781-785.

Gersch, D. M., Russotti, J. S., and Kerivan, J. E. (1979). *Critical uses of analog audio display in passive sonar* (U) (Report No. 903). Groton, CT: Naval Submarine Medical Research Laboratory. CONFIDENTIAL.

Hanna, T. E., Russotti, J. S., and Marshall, L. M. (1988). *Auditory sonar: The importance of high quality channels in system design* (U) (Report No. 1109). Groton, CT: Naval Submarine Medical Research Laboratory. SECRET.

Harris, J. D. (1980). *A comparison of computerized audiometry by ANSI, Bekesy fixed frequency, and modified ISC procedures in an industrial hearing conservation program* (Report No. 930). Groton, CT: Naval Submarine Medical Research Laboratory .

Marple, S. L., Jr. (1987). *Digital Analysis with Applications*. New Jersey: Prentice Hall.

Marshall, L. M., and Nash, M. (1990). *Analog audio, digital audio and alarms on the AN/BQQ5 sonar system: Sonar technicians ratings* (U) (Report No. 1169). Groton, CT: Naval Submarine Medical Research Laboratory. SECRET.

McGill, J. F. (1985). An introduction to digital recording and reproduction. In J. Strawn (Ed.), *Digital audio engineering: An anthology* (pp. 1-28). California: William Kaufman.

Moore, F. R. (1985). An introduction to the mathematics of digital signal processing. In J. Strawn (Ed.), *Digital Audio Signal Processing: An Anthology* (pp. 1-67). California: William Kaufman.

Nyquist, H. (1928). Certain topics in telegraph transmission theory. *Transactions of the American Institute of Electrical Engineers, 47*, 617-644.

Russotti, J. S. (1987a). *Experimental auditory display* (U) (Report No. 1094). Groton, CT: Naval Submarine Medical Research Laboratory. SECRET.

Russotti, J. S. (1987b). *Effects of system bandwidth on passive sonar target detection using normal and experimental auditory displays* (U) (Report No. 1103).

Groton, CT: Naval Submarine Medical Research Laboratory. SECRET.

Russotti, J. S., Haskell, G. B., Neal, R., Santoro, T. P., and Carpenter, S. M. (1985). *Frequency response and distortion measurement of headsets for use in auditory sonar displays* (Report No. 1066). Groton, CT: Naval Submarine Medical Research Laboratory.

Russotti, J. S., and Marshall, L. M. (1987). *Problems with current sonar system design* (U) (Presentation). Jacksonville, FL: Acoustic Analysis Working Group of the Atlantic Fleet Antisubmarine Warfare Improvement Program. SECRET.

Russotti, J. S., and Wojtowicz, J. (1989). *Effects of degree of noise correlation on passive sonar target detection using experimental auditory displays* (U) (Report No. 1139). Groton, CT: Naval Submarine Medical Research Laboratory. SECRET.

Shannon, C. E. (1948). A mathematical theory of communication. *Bell Systems Technical Journal, 27*, 379-423, 623-656.

Winer, B. J. (1962). *Statistical Principles in experimental design*. New York: McGraw-Hill.

UNCLASSIFIED
SECURITY CLASSIFICATION OF THIS PAGE

REPORT DOCUMENTATION PAGE

Form Approved
OMB No. 074-0188

1a. REPORT SECURITY CLASSIFICATION UNCLASSIFIED	1b. RESTRICTIVE MARKINGS
2a. SECURITY CLASSIFICATION AUTHORITY 2b. DECLASSIFICATION/DOWNGRADING SCHEDULE	3. DISTRIBUTION/AVAILABILITY OF THE REPORT Approved for public release; distribution unlimited
4. PERFORMING ORGANIZATION REPORT NUMBER(S) NSMRL Report 1184	5. MONITORING ORGANIZATION REPORT NUMBER(S) NA
6a. NAME OF PERFORMING ORGANIZATION Naval Submarine Medical Research Laboratory 6b. OFFICE SYMBOL (If Applicable)	7a. NAME OF MONITORING ORGANIZATION Naval Medical Research and Development Command
6c. ADDRESS (City, State, Zip Code) Box 900, Naval Submarine Base NLON, Groton, CT 06349-5900	7b. ADDRESS (City, State, Zip Code) 8901 Wisconsin Ave Bethesda, MD 20889-5606
8a. NAME OF FUNDING/SPONSORING ORGANIZATION Same as 7a 8b. OFFICE SYMBOL (If Applicable)	9. PROCUREMENT INSTRUMENT IDENTIFICATION NUMBER
8c. ADDRESS (City, State, Zip Code) Same as 7b	10. SOURCE OF FUNDING NUMBERS PROGRAM ELEMENT NO. 65856N; PROJECT NO. M0100; TASK NO. 001; WORK UNIT ACCESSION NO. DN240501

11. TITLE (Include Security Classification)
The effects of digital sampling rate and bit quantization on passive auditory sonar target detection performance

12. PERSONAL AUTHOR(S)
J. S. Russotti, T. P. Santoro, T. E. Hanna, and J. J. Wojtowicz

13a. TYPE OF REPORT	13b. TIME COVERED	14. DATE OF REPORT (Year, Month, Day)	15. PAGE COUNT
Interim	FROM ____ TO ____	1993 Feb 04	11

16. SUPPLEMENTARY NOTATION

17. COSATI CODES			18. SUBJECT TERMS (Continue on reverse if necessary and identify by block number)
FIELD	GROUP	SUB-GROUP	Sonar operator performance; acoustics; sonar; digital processing

19. ABSTRACT (Continue on reverse if necessary and identify by block number)

Modern signal-processing techniques have been applied in passive sonar to enhance sonar-operator performance for visually presented information. However, those same techniques degrade the auditory signal. These facts are surprising beacuse, in many situations, such as the classification of transients and broadband signals, the sonar operator must rely heavily on auditory information. Therefore, it is important to ensure that the audio component of new sonar systems is not degraded by the use of inadequate digital techniques. This report describes our procedure for evaluation of digital sample rate and quantization and shows the significant degradation in detection performance as a function of both reduced sample rate and reduction in number of bits used to code signal amplitude

20. DISTRIBUTION/AVAILABILITY OF ABSTRACT [X] UNCLASSIFIED/UNLIMITED [ ] SAME AS REPORT [ ] DTIC USERS	21. ABSTRACT SECURITY CLASSIFICATION UNCLASSIFIED	
22a. NAME OF RESPONSIBLE INDIVIDUAL Susan D. Monty, Publications Office	22b. TELEPHONE (Include Area Code) (203) 449-3967	22c. OFFICE SYMBOL

DD Form 1473, JUN 86 — Previous editions are obsolete. S/N 0102-LF-014-6603

SECURITY CLASSIFICATION OF THIS PAGE
UNCLASSIFIED