NRL Report 6410

Electrodynamics of a Superconducting Parallel Path Circuit

E. E. King

Energy Conversion Branch
Electronics Division

May 9, 1966

U.S. NAVAL RESEARCH LABORATORY
Washington, D.C.

DISTRIBUTION OF THIS DOCUMENT IS UNLIMITED

ABSTRACT

In order to understand better the behavior of superconductors in electrical circuitry, a detailed study is presented of a circuit composed of two superconducting inductances connected in parallel. This circuit forms a closed superconducting path through which the magnetic flux will remain constant only if the resistance of the superconductor is zero. In this regard, an upper limit for the d.c. resistivity of a superconductor is found by two methods. The first method appears in the literature several times and consists of an attempt to detect the decay of a persistent current. The second method has not been reported previously and consists of an attempt to observe between the two branches a current distribution different from that which conserves the flux linkage. These methods differ in that, in the first method, the persistent current exists entirely within the superconductor; whereas, in the second method, the externally supplied current must both enter and leave the superconductor.

The transient response of the circuit is investigated also. The flux linkage is verified to remain constant to within an experimental error of ~ 1% for current changes as short as ~ 1 microsecond.

A particularly interesting transient is that which occurs when an attempt is made to induce a persistent current suddenly. It is discovered that the more basic "steady state" solution, in this case, is an oscillatory current rather than a persistent current; since the oscillatory current solution conserves the energy stored in the circuit as well as the flux linkage of the circuit. These current oscillations are observed, and it is found that their frequency is greater than the expected frequency which is calculated using bridge measurements. A simple model of a superconducting coil is proposed to explain the data.

PROBLEM STATUS

This is a final report on a particular phase of the overall problem.

AUTHORIZATION

NRL Problem E02-02
Project RR 010-01-44-5601

Manuscript submitted March 15, 1966.

ACKNOWLEDGMENTS

I wish to acknowledge the help and advice of Dr. G. T. Rado as advisor of this thesis. In addition, I wish to acknowledge many helpful discussions and suggestions from D. S. Toffolo, who originally proposed the study of the parallel path circuit, and from D. J. Hanrahan.

TABLE OF CONTENTS

Chapter		Page
ACKNOWLEDGEMENT		ii
I.	INTRODUCTION	1
II.	DISCUSSION	2
	A. Current Division Between the Parallel Paths	2
	B. Flux Conservation	4
	C. Induction of a Persistent Current	5
III.	CIRCUIT EQUATIONS	8
	A. Current Division Between the Parallel Paths	8
	B. Induction of a Persistent Current	12
IV.	APPARATUS	18
	A. Superconducting Coils	18
	B. Measuring Equipment	20
	C. Dewar System	21
	D. Current Supply	21
V.	EXPERIMENT	22
	A. Current Division Between the Parallel Paths, and Persistent Currents	22
	1. 20 mil Pb and 5 mil Pb Circuit	24
	2. 20 mil Pb and 15 mil Sn Circuit	27
	3. Currents in Excess of the Critical Current	28
	B. Induction of Persistent Currents	29
VI.	CONCLUSIONS	33

VII. APPENDIX 35

A. Equivalent Circuit for a Superconducting Coil 36

B. Equivalent Circuit for a Capacitor 37

C. The Complete Transient Solution 38

D. Calculations 40

1. Pb - Pb Circuit at ~20 kcps 42

2. Pb - Pb Circuit at ~60 kcps 44

3. Pb - Sn Circuit at ~20 kcps 44

E. Discussion of the Results 45

SELECTED BIBLIOGRAPHY 48

LIST OF FIGURES

Figure		Page
1.	Basic schematic of the parallel path circuit	49
2.	Parallel path circuit connected to a power source	50
3.	Parallel path circuit with resistive branches.	51
4.	Parallel path circuit with provision for making one path resistive	52
5.	Parallel path circuit with distributed capacitance included.	53
6.	20 mil Pb - 5 mil Pb circuit: Current division data for slow current changes	54
7.	20 mil Pb - 5 mil Pb circuit: Current division data for fast current changes	55
8.	20 mil Pb - 15 mil Sn circuit: Current division data for slow current changes	56
9.	20 mil Pb - 15 mil Sn circuit: Current division data for fast current changes	57
10.	Persistent current induction transient of the Pb - Sn circuit.	58
11.	Persistent current induction transient of the Pb - Sn circuit with added capacitance	59
12.	Equivalent circuit for the superconducting coil.	60
13.	Complete equivalent circuit for a superconductor	61
14.	A.C. equivalent circuit for the superconducting coil	62
15.	Equivalent circuit for a capacitor	63
16.	A.C. equivalent circuit for a capacitor.	64
17.	Superconducting parallel path circuit with added capacitance.	65

LIST OF TABLES

Table		Page
1.	Measured and Calculated Values of Coil Inductances.	66
2.	Fast Induction of Persistent Currents in the 20 mil Pb - 5 mil Pb Circuit.	67
3.	Fast Induction of Persistent Currents in the 20 mil Pb - 15 mil Sn Circuit	68
4.	Values of the Circuit Parameters for the Resonant Frequency Oscillation Data.	69

ELECTRODYNAMICS OF A SUPERCONDUCTING PARALLEL PATH CIRCUIT

CHAPTER I

INTRODUCTION

There is, at present, considerable interest in the use of superconductors in electrical circuitry. In order to use superconductors effectively, however, their behavior should be predictable in a given circuit and under specified operating conditions. In order to provide information toward this end, the behavior of a simple but nontrivial superconducting circuit is investigated in detail.

The circuit chosen for study, the parallel path circuit, is composed of two inductances connected in parallel, Fig. 1. Any information obtained from this circuit should be applicable directly to the design of such devices as superconducting transformers and superconducting energy storage coils. It is of primary concern to measure any resistance appearing in the superconducting coils, since it is specifically the low power loss property of superconductors which makes them attractive for circuit application.

Note: This report is based on a thesis submitted to the Faculty of the Graduate School of the University of Maryland in partial fulfillment of the requirements for the degree of Master of Science - 1965.

CHAPTER II

DISCUSSION

A. Current Division Between the Parallel Paths. Perhaps the first question that might be asked concerning the behavior of the parallel path circuit is how a steady current will divide between the two branches. According to Kirchoff's laws, the current will divide so that the ratio of the branch currents is equal to the ratio of the reciprocals of the branch resistances,

$$\frac{I_1}{I_2} = \frac{R_2}{R_1} . \tag{1}$$

In the case of a superconducting circuit, however, the branch resistances become infinitesimal and, thus, the current ratio becomes indeterminate.

M. vonLaue[1] succeeded in deriving expressions for the current division between parallel branches by means of an energy argument. He reasoned that the current would divide between the two branches in such a way as to minimize the energy stored in the magnetic fields associated with the inductances of the circuit. For a circuit with branch inductances L_1 and L_2 having a mutual inductance M, this current division is found to be

$$\begin{aligned} I_1 &= \frac{L_2-M}{L_1+L_2-2M} I , \\ I_2 &= \frac{L_1-M}{L_1+L_2-2M} I . \end{aligned} \tag{2}$$

---

[1]M. vonLaue, Superconductivity, Academic Press, 1952, p. 8 ff.

Of course, a minimum energy argument also is applicable for deriving the current distribution when the branches are resistive. In this case, however, it is the steady state energy output due to the branch resistances which must be minimized. In general, this steady state energy output per unit time, the power, is

$$P = I_1^2 R_1 + I_2^2 R_2 ,$$

where R_1 and R_2 are the resistances of the two branches. The current division for minimum energy output is found by setting the derivative of P with respect to either I_1 or I_2 equal to zero, subject to the condition that $I = I_1 + I_2$ is a constant. The resulting current division is

$$I_1 = \frac{R_2}{R_1+R_2} I ,$$
$$I_2 = \frac{R_1}{R_1+R_2} I . \qquad (3)$$

It is apparent from a comparison of (2) and (3) that observation of the steady state current division, in a suitable circuit, would allow a definite conclusion to be reached concerning the value of the d.c. resistivity of a superconductor. Unfortunately, there is no way to determine when the steady state current distribution described by (2) has been reached; therefore, only an upper limit can be placed upon the resistivity if the current division (2) is observed. Upper limits on the resistivity of Pb have been found previously by observation of a persistent current[2, 3, 4]; however, as Blatt[5] has pointed out, there

---

[2]S. C. Collins (unpub) quoted by J. W. Crowe, IBM J. Research Develop., 1, 1957, p. 295.

[3]R. F. Broom, Nature, 190, 1961, p. 992.

[4]D. J. Quinn, III, and W. B. Ittner, III, J. Appl. Phys., 33, 1962, p. 748.

[5]J. M. Blatt, Theory of Superconductivity, Academic Press, 1964, p. 309.

is a theoretical difference between a current in the superconductor which originates external to the superconductor and a persistent current which exists entirely within the superconductor. For this reason, it is important to investigate the resistance of the superconductors in the parallel path circuit by means of the current division.

The vonLaue current division equations have been verified to within about 1% by Justi and Zickner[6] for the special case $L_1 < M < L_2$. This inequality produces the strange situation of having a current run "uphill" in branch two. In discussing their experiment, Justi and Zickner assumed the property of zero resistivity for their superconductors. However, it should be recognized that, even if the branch resistances had not been zero but only sufficiently small, the same current divisions would have been observed. In the present experiment, the vonLaue equations will be verified for a different inductance situation and a particular current division will be observed as a function of time, so that a statement can be made about the resistivity of the superconductors which were used.

B. Flux Conservation. The current division derived by vonLaue is just that division necessary to conserve the magnetic flux within the air space of the superconducting loop, the flux of induction. By definition, the flux of induction, Φ, is given by LI; therefore, for the parallel path circuit

$$\Phi = (L_1-M)I_1 - (L_2-M)I_2$$

where account has been taken of the fact that the currents are defined in opposite directions with respect to the sense of the loop. If the current division is given by (2), the flux of induction is

$$\Phi = \left[\frac{(L_1-M)(L_2-M)}{L_1+L_2-2M} - \frac{(L_2-M)(L_1-M)}{L_1+L_2-2M}\right]I = 0.$$

[6] Von E. Justi and G. Zickner, Physik. Z. 42, 15 Sept 1941, p. 257 ff.

Thus, the current divides in a manner which will keep the flux of induction constant.

The fact that flux is conserved within the closed superconducting path is not coincidental but could have been predicted from Faraday's law of electromagnetic induction,

$$\iint_S \frac{\partial \bar{B}}{\partial t} \cdot d\bar{S} = -c \oint_C \bar{E} \cdot d\bar{\ell} \quad .$$

Since assuming perfect conductivity is equivalent to setting $\bar{E} = 0$,

$$\frac{\partial}{\partial t} \iint_S \bar{B} \cdot d\bar{S} = 0 \quad .$$

This equation states that $\iint_S \bar{B} \cdot d\bar{S}$, the flux of induction, is a constant.[7]

The fact should not be overlooked that Faraday's induction law applies to all circuits. That is, if an attempt is made to change the magnetic flux passing through any circuit, a current is induced which tends to maintain the initial flux situation. Of course, only in a circuit having no resistance can this induced current persist.

C. Induction of a Persistent Current. An experiment for inducing a persistent current is described frequently.[8] In this experiment, one path of the parallel path circuit is driven normal, which results in the total current, I, flowing down the superconducting path. Returning the normal path to the superconducting state "traps" the current, I, in the branch which has remained in the superconducting state. In order to understand the effect of this normal-to-superconducting transition, the transition can be divided into two parts, one part in which the branch

---

[7]The presence of a penetration depth has been neglected in this derivation since, for bulk superconductors, its effect on flux conservation is negligible. For a more complete discussion, see F. London, Superfluids, Vol. I, Dover, 1961, p. 47 ff.

[8]vonLaue, op. cit., p. 10.

is resistive, and a second part in which the branch has no resistance. During the first part, no current will shift from the zero-resistance path to the resistive path. The instant the second part applies, the principle of flux conservation can be used. The initial flux of induction is

$$\Phi_i = (L_1-M)I_{1i}$$

and, in general, the final flux of induction is

$$\Phi_f = (L_1-M)I_{1f} - (L_2-M)I_{2f} \ .$$

Requiring that flux be conserved, $\Phi_i = \Phi_f$, and that the sum of the branch currents always equals the total current, $I = I_{1i} = I_{1f} + I_{2f}$, it is verified easily that $I_{2f} = 0$ and thus $I_{1i} = I_{1f}$.[9]

If, under the conditions $I_1 = I$ and $I_2 = 0$, the current, I, is interrupted, a current which conserves the flux of induction must be induced in the loop. This current always is assumed to be the persistent current; however, when the current source is disconnected suddenly, two questions arise: (1) In view of the fact that current cannot change infinitely fast in an inductance, what is the transient behavior?

---

[9]The problem may be slightly more complicated since an inductance change due to the Meissner effect, as well as the resistance change, occurs at the transition. Suppose, for example, that the resistance change takes place before the inductance change. In that case, there is an inductance change after both branches have become superconducting. The initial flux of induction is then

$$\Phi_i = (L_1-M')I_{1i}$$

where M' is the mutual inductance between the two branches before the inductance of branch two has assumed its superconducting value. The final flux of induction remains

$$\Phi_f = (L_1-M)I_{1f} - (L_2-M)I_{2f} \ .$$

Now, in order that the flux of induction be conserved, I_{2f} cannot remain zero but must become

$$I_{2f} = \frac{M'-M}{L_1+L_2-2M} I \ .$$

(2) What accounts for the energy difference between the initial and the final current distributions? That energy is "lost" in the general case is verified by the following calculation:

For the circuit of Fig. 1, the stored magnetic energy is

$$\mathcal{E} = \tfrac{1}{2}L_1 I_1^{\,2} + \tfrac{1}{2}L_2 I_2^{\,2} + M I_1 I_2$$

and the flux linkage is

$$\Phi = (L_1 - M)I_1 - (L_2 - M)I_2 \quad .$$

Initially, one path carries the total current, $I_{1i} = I$ and $I_{2i} = 0$, so that

$$\mathcal{E}_i = \tfrac{1}{2}L_1 I^2 \ ,$$

$$\Phi_i = (L_1 - M)I \quad .$$

In the final state, that of a persistent current, $I_{1f} = -I_{2f}$, and

$$\mathcal{E}_f = \tfrac{1}{2}(L_1 + L_2 - 2M)I_{1f}^{\,2} \ ,$$

$$\Phi_f = (L_1 + L_2 - 2M)I_{1f} \quad .$$

The constant flux linkage requirement is satisfied by setting $\Phi_i = \Phi_f$, in which case

$$I_{1f} = \frac{L_1 - M}{L_1 + L_2 - 2M} I \quad .$$

The final energy can then be written

$$\mathcal{E}_f = \tfrac{1}{2}I^2 \frac{(L_1 - M)^2}{L_1 + L_2 - 2M} \ .$$

Finally, the energy difference between the initial and the final states, that is, the energy that must be accounted for, is given by

$$\Delta\mathcal{E} = \mathcal{E}_i - \mathcal{E}_f = \tfrac{1}{2}I^2\left[\frac{L_1 L_2 - M^2}{L_1 + L_2 - 2M}\right] \quad . \tag{5}$$

The energy difference is zero only for the special case of perfect coupling, $M = \sqrt{L_1 L_2}$.

CHAPTER III

THE CIRCUIT EQUATIONS

Derivations of circuit behavior based directly upon fundamental principles, such as vonLaue's current division derivation based upon a minimum energy principle, can be very instructive; however, such derivations usually lend themselves only to the simplest of problems. In general, a circuit's behavior is found much more readily by means of ordinary circuit theory. Although it might appear at first that the solution of superconducting circuit problems by circuit theory would be complicated by the fact that the resistances approach zero (c.f. the current division result based upon Kirchoff's laws, that the current ratio is indeterminate), the solutions can be obtained by going through the transient.

A. Current Division Between the Parallel Paths. The vonLaue current division equations can be obtained by solving the circuit equations. Fig. 2 represents the zero-resistance parallel path circuit connected to a power source. When the switch is closed, the following equations are applicable:

$$E = iR + V \,, \qquad \text{(a)}$$

$$V = L_1\frac{di_1}{dt} + M\frac{di_2}{dt} = L_2\frac{di_2}{dt} + M\frac{di_1}{dt} \,, \qquad \text{(b)}$$

$$i = i_1 + i_2 \,, \qquad \text{(c)} \qquad (6)$$

$$i(0) = i_1(0) = i_2(0) = 0 \,. \qquad \text{(d)}$$

Combining terms in (6b),

$$(L_1-M)\frac{di_1}{dt} = (L_2-M)\frac{di_2}{dt} .$$

A relationship between the branch currents at any time, t, then can be found by integration,

$$\int_o^t (L_1-M)\frac{di_1}{dt}dt = \int_o^t (L_2-M)\frac{di_2}{dt}dt , \tag{7}$$

$$(L_1-M)i_1(t) = (L_2-M)i_2(t) .$$

Eliminating i(t) and $i_2(t)$ in (6a) by means of (6c) and (7) respectively,

$$E = \left[\frac{L_1+L_2-2M}{L_2-M}\right]Ri_1 + \left[\frac{L_1L_2-M^2}{L_2-M}\right]\frac{di_1}{dt} .$$

This equation can be rewritten in the form

$$dt = \frac{di_1}{\frac{E(L_2-M)}{L_1L_2-M^2} - i_1\left[\frac{L_1+L_2-2M}{L_1L_2-M^2}\right]R} ,$$

which is readily integrated to obtain

$$i_1 = \frac{L_2-M}{L_1+L_2-2M}\frac{E}{R}\left\{1-\exp\left[-\frac{t}{\theta}\right]\right\}$$

where

$$\theta = \frac{L_1L_2-M^2}{(L_1+L_2-2M)R} .$$

A similar expression for i_2 can be written immediately by symmetry

$$i_2 = \frac{L_1-M}{L_1+L_2-2M}\frac{E}{R}\left\{1-\exp\left[-\frac{t}{\theta}\right]\right\} .$$

The steady state branch currents are those obtained by vonLaue, since $\frac{E}{R} = I$; and, in addition, it is seen that the transient occurs exponentially with the time constant θ. Notice that the flux of induction is conserved at any time, t.

In order to make a statement concerning any resistances in the

paths, it must be known how these resistances would affect the current division. Fig. 3 represents the resistive branch case of the parallel path circuit; and the applicable equations upon closing the switch are

$$
\begin{aligned}
E &= iR + V , \\
V &= i_1R_1 + L_1\frac{di_1}{dt} + M\frac{di_2}{dt} , \\
V &= i_2R_2 + L_2\frac{di_2}{dt} + M\frac{di_1}{dt} , \\
i &= i_1 + i_2 , \\
i(0) &= i_1(0) = i_2(0) = 0 .
\end{aligned}
\tag{8}
$$

To solve these more complicated equations, it is convenient to use the Laplace transformations.[10] Denoting the transformed functions by bars, equations (8) become

$$
\begin{aligned}
\frac{E}{s} &= \bar{i}R + \bar{V} , \\
\bar{V} &= \bar{i}_1R_1 + L_1s\bar{i}_1 + Ms\bar{i}_2 , \\
\bar{V} &= \bar{i}_2R_2 + L_2s\bar{i}_2 + Ms\bar{i}_1 , \\
\bar{i} &= \bar{i}_1 + \bar{i}_2 .
\end{aligned}
\tag{9}
$$

These equations may be combined to give

$$
\begin{aligned}
\frac{E}{s} &= \bar{i}_1(R+R_1+L_1s) + \bar{i}_2(R + Ms) , \\
\frac{E}{s} &= \bar{i}_1(R + Ms) \quad + \bar{i}_2(R+R_2+L_2s) .
\end{aligned}
$$

The determinant method for solving simultaneous equations can be used to find $\bar{i}_1$,

$$
\bar{i}_1 = \frac{N_1(s)}{D(s)}
$$

---

[10] See e.g. Gardner and Barnes, Transients in Linear Systems, Vol. I, Wiley, 1947.

where
$$N_1(s) = \begin{vmatrix} \frac{E}{s} & R + Ms \\ \frac{E}{s} & R+R_2+L_1 s \end{vmatrix},$$

and
$$D(s) = \begin{vmatrix} R+R_1+L_1 s & R + Ms \\ R + Ms & R+R_2+L_2 s \end{vmatrix}.$$

Thus, $\bar{i}_1$ can be written

$$\bar{i}_1 = \frac{E[R_2+(L_1-M)s]}{s\left\{[L_1L_2-M^2]s^2+[L_1(R+R_2)+L_2(R+R_1)-2RM]s+R_1R_2+R[R_1+R_2]\right\}}.$$

The Laplace transform of this function is

$$i_1 = \frac{ER_2}{R(R_1+R_2)+R_1R_2}\left\{1 + \left[\frac{\gamma \sinh \eta t}{2(L_1L_2-M^2)\eta} - \cosh \eta t\right]e^{-\xi t}\right\} \tag{10}$$

where
$$\xi = \frac{L_1R_2+L_2R_1+R(L_1+L_2-2M)}{2(L_1L_2-M^2)},$$

$$\eta = \frac{\left\{[L_2(R+R_1)-L_1(R+R_2)]^2+4L_1L_2R^2-4MR[L_1(R+R_2)+L_2(R+R_1)]+4M^2(R+R_1)(R+R_2)\right\}^{\frac{1}{2}}}{2(L_1L_2-M^2)},$$

and
$$\gamma = (R+R_1)L_2-(R+R_2)L_1+\frac{2R_1RL_2}{R_2}-2MR_1\left[\frac{R+R_2}{R_2}\right].$$

Notice that the steady state current is $\frac{R_2}{R_1+R_2}$ I, since $\frac{E}{R+\frac{R_1R_2}{R_1+R_2}}$ is I.

It might appear from a superficial look at the time constant, $1/\xi$, that the steady state current is reached quickly in the resistive case even though R_1 and R_2 are very small. Actually, the situation is more complicated and the time constant $1/\eta$ must be considered as well. Expressing the hyperbolic functions in their exponential form and collecting terms, (10) becomes

$$i_1 = \frac{ER_2}{R(R_1+R_2)+R_1R_2}\left[1+\frac{B-1}{2}e^{(\eta-\xi)t}-\frac{B+1}{2}e^{-(\eta+\xi)t}\right]$$

where
$$B = \frac{\left[(R+R_1)L_2-(R+R_2)L_1+\frac{2R_1RL_2}{R_2}-2MR_1\frac{R+R_2}{R_2}\right]}{\left\{[L_2(R+R_1)-L_1(R+R_2)]^2+4L_1L_2R^2-4MR[L_1(R+R_2)+L_2(R+R_1)]+4M^2(R+R_1)(R+R_2)\right\}^{\frac{1}{2}}}.$$

If R_1 and R_2 are allowed to approach zero, $\xi = \eta$, and the steady state solution is no longer $\frac{ER_2}{R(R_1+R_2)+R_1R_2}$ but is, in fact, $\frac{L_2-M}{L_1+L_2-2M}\frac{E}{R}$.[11] The important point is that, if R_1 and R_2 are very small, $(\eta - \xi)t$ is nearly zero for a considerable time; therefore, since $(\eta + \xi)$ is ordinarily large, a quasi-steady state, which depends only upon the inductances, is reached quickly. One then must wait until $(\eta - \xi)t$ becomes large before the effects of the branch resistances can be detected. However, even if no current division change is observed, one can place only an upper limit on the branch resistances.

B. Induction of a Persistent Current. In order to induce a persistent current in the parallel path circuit, the flux linkage must be made different from zero. This can be accomplished by driving one path normal momentarily, as explained previously. A qualitative representation of this operation can be imagined as opening and closing a switch which short circuits a resistance in one of the branches, Fig. 4. This idealized model will be sufficient for the present work since only the final current states are of importance.

Only the special case of $L_1 = L_2 = L$ and $M = 0$ will be considered since the arbitrary inductance case is more complex and provides no important additional information. For the circuit of Fig. 4, after switch s_1 has been closed and the steady state current distribution has been reached, s_2 is opened. At this point the following equations apply,

$$E = iR+V ,$$

$$V = L\frac{di_1}{dt} = L\frac{di_2}{dt} + i_2R , \qquad (11)$$

[11] It is interesting to note that the vonLaue current division equations can be obtained from the resistive branch solution by a limiting process; that is, by allowing the branch resistances to approach zero.

$$i = i_1 + i_2 \quad ,$$

$$i_1(0) = i_2(0) = \frac{E}{2R} \quad .$$

Combining these equations and performing the Laplace transformations,

$$\frac{E}{s} = (\bar{i}_1 + \bar{i}_2)R + Ls\bar{i}_1 - \frac{E}{2R}L \quad ,$$

$$\frac{E}{s} = (\bar{i}_1 + \bar{i}_2)R + Ls\bar{i}_2 + R_2\bar{i}_2 - \frac{E}{2R}L \quad .$$

Solving these simultaneous equations for $\bar{i}_1$ and $\bar{i}_2$,

$$\bar{i}_1 = \frac{E}{2R}\left[\frac{2}{s} - \frac{s+\frac{2R+R_2}{2L}}{\left[s+\frac{2R+R_2}{2L}\right]^2 - \frac{4R^2+R_2^2}{4L^2}} - \frac{\frac{2R+R_2}{2L}}{\left[s+\frac{2R+R_2}{2L}\right]^2 - \frac{4R^2+R_2^2}{4L^2}}\right] ,$$

$$\bar{i}_2 = \frac{E}{2R}\left[\frac{\frac{2R-R_2}{2L}}{\left[s+\frac{2R+R_2}{2L}\right]^2 - \frac{4R^2+R_2^2}{4L^2}} + \frac{s+\frac{2R+R_2}{2L}}{\left[s+\frac{2R+R_2}{2L}\right]^2 - \frac{4R^2+R_2^2}{4L^2}}\right] \quad .$$

The currents are, therefore,

$$i_1 = \frac{E}{2R}\left[2 - \left\{\frac{2R+R_2}{(4R^2+R_2^2)^{\frac{1}{2}}}\sinh\frac{(4R^2+R_2^2)^{\frac{1}{2}}}{2L}t + \cosh\frac{(4R^2+R_2^2)^{\frac{1}{2}}}{2L}t\right\}e^{-\left(\frac{2R+R_2}{2L}\right)t}\right] ,$$

$$i_2 = \frac{E}{2R}\left[\frac{2R-R_2}{(4R^2+R_2^2)^{\frac{1}{2}}}\sinh\frac{(4R^2+R_2^2)^{\frac{1}{2}}}{2L}t + \cosh\frac{(4R^2+R_2^2)^{\frac{1}{2}}}{2L}t\right]e^{-\left(\frac{2R+R_2}{2L}\right)t} \quad .$$

As expected, the current in the resistive branch switches to the zero resistance path.

The normal path may be made "superconducting" again by closing the switch, s_2. Under these conditions,

$$E = iR + V, \qquad \text{(a)}$$

$$V = L\frac{di_1}{dt} = L\frac{di_2}{dt} \quad , \qquad \text{(b)} \qquad (12)$$

$$i = i_1 + i_2 \ , \tag{c}$$

$$i_1(0) = \frac{E}{R} \ , \ i_2(0) = 0 \ . \tag{d}$$

Integrating (12b),

$$i_1 - \frac{E}{R} = i_2 \ .$$

Combining this expression with (12c),

$$i = 2i_2 + \frac{E}{R} \ ,$$

and substituting into (12a),

$$E = 2i_2R + E + L\frac{di_2}{dt} \ .$$

This equation can be integrated from t = 0 to t to obtain

$$t = -\frac{1}{2R}(\ln i_2 + \infty) \ .$$

The only way in which this equation can be satisfied for arbitrary values of t is for $i_2(t)$ to remain zero. This, of course, means that $i_1(t)$ must remain constant, $i_1(t) = \frac{E}{R}$. This result is reasonable, since shorting out the resistance R_2 does not produce a voltage change in the circuit.

Now, a flux conserving current must be induced in the superconducting loop if switch s_1 is opened. Since it must be that $V = L\frac{di_1}{dt} = L\frac{di_2}{dt}$, it is obvious that $\frac{d(i_1 - i_2)}{dt} = 0$, or $(i_1 - i_2)$ is a constant. If, initially, a current I exists in path #1 and no current exists in path #2, $i_1 - i_2 = I$. The only possible d.c. steady state current distribution after s_1 has been opened, consistent with $i_1 + i_2 = 0$, is $i_1 = \frac{I}{2}$ and $i_2 = -\frac{I}{2}$, the flux conserving persistent current. This may be a satisfactory solution to the problem when the external current is reduced very slowly to zero; but for the case where the switch, s_1, is opened suddenly, it would appear that the current must change

discontinuously in the branches. Since a current cannot change discontinuously in an inductance, the initial condition that s_1 is opened quickly must be non-physical. In the real circuit, arcing would occur across this switch to insure that it was not opened too quickly. This provides a mechanism for dissipating the "lost" energy, since the prolonged connection with the external circuitry allows energy to be dissipated in the external resistances.

In any real circuit there will be distributed capacitances associated with each branch, and these capacitances should be included in the circuit analysis. Adding this distributed capacitance to the circuit in the form of a lumped capacitor shunting the inductances, Fig. 5, the following equations are appropriate when switch s_1 is opened,

$$V = L_1\frac{di_1}{dt}+M\frac{di_2}{dt} = L_2\frac{di_2}{dt}+M\frac{di_1}{dt} ,$$

$$V = \frac{1}{C}\int i_c dt ,$$

$$i+i_1+i_c = 0 \text{ for } t>0 ,$$

$$i_1(0) = I,\ i_2(0) = 0,\ V(0) = 0 .$$

The solutions of these equations are

$$i_1 = I\left[\frac{L_2-M}{L_1+L_2-2M}\right]\left[\frac{L_1-M}{L_2-M}+\cos\ \omega t\right] ,$$

$$i_2 = -I\left[\frac{L_1-M}{L_1+L_2-2M}\right]\left[1-\cos\ \omega t\right] ,$$

$$i_c = -I\cos\ \omega t ,$$

where

$$\omega = \left[\frac{L_1+L_2-2M}{(L_1L_2-M^2)C}\right]^{\frac{1}{2}} .$$

This solution conserves the flux within the loop,

$$\Phi_f = (L_1-M)i_1-(L_2-M)i_2$$

$$= \frac{(L_1-M)(L_2-M)}{L_1+L_2-2M}I\left[\frac{L_1-M}{L_2-M}+\cos\ \omega t+1-\cos\ \omega t\right]$$

$$= (L_1-M)I = \Phi_i \ ,$$

and, in addition, no energy is "lost." The initial energy stored in the circuit is $\mathcal{E}_i = \frac{1}{2}L_1I^2$. After switching, the energy stored by the inductances is $\mathcal{E}_L = \frac{1}{2}L_1i_1^2+\frac{1}{2}L_2i_2^2+Mi_1i_2$ which is

$$\mathcal{E}_L = \frac{I^2}{2(L_1+L_2-2M)}\left[(L_1-M)^2+(L_1L_2-M^2)\cos^2\omega t\right] .$$

The energy stored in the capacitance is $\mathcal{E}_c = \frac{1}{2}CV^2$. Since

$$V = L_1\frac{di_1}{dt}+M\frac{di_2}{dt} \ ,$$

$$\mathcal{E}_c = \frac{I^2}{2}\left[\frac{L_1L_2-M^2}{L_1+L_2-2M}\right]\sin^2\omega t \ .$$

The total final energy is then

$$\mathcal{E}_f = \mathcal{E}_L+\mathcal{E}_c = \frac{I^2}{2}\left[\frac{(L_1-M)^2}{L_1+L_2-2M}+\frac{L_1L_2-M^2}{L_1+L_2-2M}(\sin^2\omega t+\cos^2\omega t)\right] ,$$

or

$$\mathcal{E}_f = \frac{1}{2}L_1I^2 = \mathcal{E}_i \ .$$

Thus, it has been found that the persistent current solution is not the only solution to the switching problem which conserves flux; in fact, some type of dissipation mechanism is required before the persistent current can appear.

Although, as mentioned previously, resistances in the external circuitry can provide a damping resistance, one easily can imagine situations in which the external circuitry is disconnected from the superconducting circuit before the oscillations can be damped. Any further damping of the oscillations, then, would have to arise from

resistive effects connected directly with the superconducting circuit. It is possible, therefore, that a switching experiment of this kind could provide a very sensitive method for measuring a.c. resistance effects in superconductors.

It is important at this point to distinguish between the results of an effective parallel and an effective series damping resistance. If a resistance appeared in series with the superconducting loop, as could be the case for some type of a.c. resistance effect in the superconductor, the flux of induction would no longer have to remain constant; and the final loop current, after the oscillations have been damped out, would have to be less than the flux-conserving persistent current. If, on the other hand, a damping resistance acted in parallel with the parallel path circuit, the flux of induction would have to remain constant; and a flux-conserving persistent current would have to remain after the damping of the oscillations.

Two measurements are important here, then, if the switching experiment can be performed: (1) the value of the persistent current present after the oscillations have been damped, to determine the value of any series resistance; (2) the damping rate of the oscillations, so that the parallel components of resistance can be calculated.

CHAPTER IV

APPARATUS

A. Superconducting Coils. Each superconducting path consisted of wire wound in the form of a flat spiral. The wire was laid into grooves machined in teflon to assure reproducible and identical paths. This groove was 0.025" wide and 0.025" deep; spacing between grooves was 0.050" center to center. The teflon form had an outside diameter of 3 inches and an inside diameter of 1 inch, which allowed 19 turns of wire. A space was left between turns in order to reduce magnetic and thermal interaction between adjacent turns.

Coils were wound with wire of different sizes and of different materials so that branch resistances, if present, would not be equal necessarily. In particular, coils were wound with 20 mil three-9's Pb wire, 5 mil Pb wire (made from the 20 mil wire so that impurity content would be equivalent), and 15 mil 99.5% Sn wire. The self-inductances of the coils were measured on a General Radio Type 1632A inductance bridge in both their superconducting and normal states. The absolute accuracy of the bridge was stated to be 0.1%, but errors involved in correcting for measurement leads, as well as variations in making the coil connections, reduced this accuracy to perhaps 0.75%. A small inductance change was observed between the normal and the superconducting states due to current redistribution. In the normal state, the current is distributed almost uniformly throughout the wire's cross-section; whereas, in the superconducting state, the current is confined to the surface. Since the degree of current redistribution is greater the larger the wire size, the

inductance change also should be greater the larger the wire size. Shoenberg gives a formula for the inductance of a ring for both volume and surface currents[12] from which an approximate inductance change for the spiral coil can be calculated. The difference between the inductance in the normal and the superconducting states for a ring is

$$\Delta L = -7\pi b + 8\pi b = \pi b$$

where b is the mean radius of the ring and the assumption made is that the radius of the wire's cross-section is small compared to b. Approximating the spiral coil by 19 concentric rings, the total inductance change is found to be 0.148 μh; that is, the inductance decreases by about 0.148 μh when changing from the normal to the superconducting state. This result cannot be expected to be accurate since it predicts the same inductance change regardless of conductor size. Calculations of the normal inductances of the coils wound with the various wire sizes were made using NBS equations[13] which were stated to be accurate to about one percent. Of course, these calculations do not include the coil leads which, for the small inductance coils, are a significant factor. Measured values include the coil connections; however, corrections have been made for the measurement leads. Table I contains both the calculated and the measured inductance values.

The coils were mounted one above the other and placed at right angles. This positioning reduced the mutual inductance to an immeasurably small value, less than 0.005 μh, or less than 0.03% of the self-inductance.

---

[12] D. Shoenberg, Superconductivity, Cambridge, 1962, p. 30.

[13] Radio Instruments and Measurements, Circular of the Natl. Bureau of Stds C74, 1937, p. 260 ff.

In order to complete a superconducting loop, the leads from each coil were cleaned mechanically, twisted together, and soldered into small copper cups containing 50-50 Pb-Sn alloy solder. In order to verify that the junctions were superconducting, a persistent current always was observed for an hour. No measurable current decay at the end of that time was assumed to indicate a superconducting circuit.

A thermal switch was used in the 20 mil Pb wire path to drive part of this path normal. The switch consisted of a short section of the 20 mil Pb wire non-inductively wound with 5 mil molybdenum wire and sealed in a small (5/16" diameter) glass dewar with silicone grease. A very small amount of power, about 40 milliwatts, applied to the molybdenum wire was sufficient to drive the Pb normal.

B. Measuring Equipment. A Radio-Frequency Lab gaussmeter, Model 1890, having a maximum sensitivity of one gauss full-scale and using an InAs Hall-effect probe, was used to monitor the magnetic field from one coil. This probe was placed at the center of either the 5 mil Pb or 15 mil Sn coils. Since the Hall-effect probe responds only to the perpendicular component of a magnetic field, there was no measurable pickup of field from the coil not being measured. Steady state field measurements reproducible to ~1% could be made with this instrument.

In order to observe the transient behavior of the circuit, 250-turn (#28 copper wire) search coils having inductances of ~1.2 mh could be mounted within the one-inch-diameter center openings of the coils. The voltages across these coils were monitored on a multi-channel Tektronix oscilloscope. In addition, the voltage across a 0.25Ω, 30 watt resistance in series with one lead to the parallel path circuit also was monitored in order to observe the current in the external circuitry.

C. Dewar System. A closed dewar system was used so that the temperature of the helium bath could be lowered by pumping. This was necessary in order to reach temperatures below the transition temperature of Sn. Pressure above the He bath was measured by a USG vacuum gauge. No attempt was made to determine the temperature accurately since it was necessary only to have the Sn below its transition temperature.

D. Current Supply. Storage batteries were used to supply the current. Current was varied by the use of a transistor "rheostat." A dpdt switch was used for the switching in order that the superconducting circuit could be isolated completely from the external circuitry.

CHAPTER V

EXPERIMENT

A. Current Division Between the Parallel Paths, and Persistent Currents. Current division experiments were performed with circuits composed of the 20 mil Pb wire coil, coil A, and either the 5 mil Pb wire or the 15 mil Sn wire coil, coils B_1 and B_2 respectively. In each experiment, the magnetic field from coil B was measured and then was related to an equivalent current in coil B, I_B, by means of a calibration constant. This calibration constant was determined by plotting the magnetic field versus the input current, I, with coil A partially normal.[14] Knowledge of the input current, I, and the current in coil B allowed the current in coil A, I_A, to be deduced.

It will be convenient to discuss the data in terms of the dimensionless branch current ratio, $\epsilon = \frac{I_B}{I_A}$, since this ratio should be a constant for any given parallel path circuit having zero branch resistances. The current division data obtained when no persistent current flows provides one determination of ϵ; $\epsilon = \frac{I_B}{I_A} = \frac{I_B}{I-I_B}$. Even if the current and field measurements are accurate to within 1%, the error in this calculated value of ϵ could be as large as 3%; however, if averages are taken from a large number of data in the actual calculation of ϵ, this error should be reduced to something less than 3%.

When a persistent current, I_{PC}, is present, a current, I, should divide in such a way that, if the flux of induction is to be conserved,

[14] In an early experiment, the magnetic field of the 20 mil wire path was monitored also. It was verified that no measurable current flowed down this path when the thermal switch was on.

ϵ is given by $\frac{I_B - I_{PC}}{I - I_B + I_{PC}}$. In this expression, I_{PC} is taken as positive if its flow is positive in coil B.

A value of ϵ also can be calculated from persistent current induction data. If initially the total input current, I, flows through coil B, then reducing I to zero should induce a persistent current $I_{PC} = \frac{I}{1+\epsilon}$ if flux is to be conserved. Since it is the initial and final currents in coil B which are measured, $I_{Bi} = I$ and $I_{Bf} = I_{PC}$ respectively, ϵ is given by $\frac{I_{Bi} - I_{Bf}}{I_{Bf}}$.

The values of ϵ found from the current measurements are to be compared with the values of ϵ given by the inductance ratios, $\frac{L_A}{L_B}$. Since the measured coil inductances are expected to be accurate to within 0.75%, the calculated inductance ratios should be accurate to within about 1.75%. Thus, for the current measurements to be consistent with constant flux linkage, the values of ϵ calculated from the inductance measurements and from the individual current measurements should agree to within at least 4.75%; and the values of ϵ calculated from the averaged current data should agree to within perhaps 2.75% of the inductance ratios.

The current measurements were obtained after both slow and fast current changes had been made. The slow current changes were made by slowly adjusting the rheostat, and the fast current changes were made by pre-adjusting the rheostat and then closing the dpdt knife switch to connect the circuit. For the slow current changes, there is no reason to believe that the flux linkage would not be conserved unless the superconductor's d.c. resistivity is not zero. However, since superconductors do exhibit a.c. resistance effects, it is conceivable that the flux linkage might not be conserved during a fast transient. Such an effect, if present, could be observed in the data as a difference in ϵ

between fast and slow current changes.

1. 20 mil Pb and 5 mil Pb circuit. From the measured inductance values in Table I, ϵ_L is found to be 0.995 ± 0.017. Since both branches of this 20 mil Pb and 5 mil Pb circuit are composed of the same Pb, any d.c. resistivity present should be common to both branches; and, therefore, a resistance ratio, ϵ_R, can be calculated. Since $R = \frac{\rho \ell}{A}$, where ℓ is the conductor's length (which is about the same for both branches) and A the conductor's cross-sectional area,

$$\epsilon_R = \frac{R_A}{R_{B1}} = \frac{A_{B1}}{A_A} = \frac{1}{16} = 0.0625 \ .$$

Thus, if the resistivity were not zero, the current division would change from an initial ~50-50 split to a final ~6-94 split. This significant difference in ϵ_L and ϵ_R increases the probability of detecting the resistivity of Pb if it is not zero.

In order to verify that the parallel path circuit was superconducting, a $\frac{1}{2}$-amp persistent current was observed for one hour. No current decay was observed during this time. Since a change in the persistent current of 2 ma (a field change of about 0.01 gauss) should have been detectable easily, the d.c. resistivity of Pb for a persistent current had to be at least less than $2.3 \times 10^{-17} \Omega$-cm.

A one-amp current was introduced into the parallel path circuit, and the division was noted. With the external current constant, the gaussmeter reading was observed for two hours. Again, no current change was observed, and it could be stated that no current change larger than 2 ma occurred in the 5 mil wire branch. This requires that the d.c. resistivity of Pb for current division be less than $2.6 \times 10^{-17} \Omega$-cm.

The calibration curve of field versus current for the 5 mil wire coil is shown in Fig. 6. All points lie on a straight line having a slope

of 4.766 to within an error of 1%, except for currents of 0.2A and less, which were only within 3% due to inability to obtain more than two significant figures in the meter readings. No attempt was made to determine the calibration in terms of absolute field units; however, since a one-ampere coil current was found to produce a field of about 5.4 gauss at the center of the coil, a reasonably accurate idea of the magnitude of the magnetic field strengths can be determined.

With both coils superconducting and the current being increased slowly, the field strength again was recorded as a function of the current. This data also is plotted in Fig. 6. The average slope of this curve is 2.368, and the same 1% accuracy obtains for the current values greater than 0.2A. From this data, the measured value of the current division ratio for the slow current changes is found to be 0.987. This value of ϵ is within 1% of the calculated value of ϵ_L.

The current division then was measured after the current had been introduced to the circuit suddenly by closing a switch. The rise time was not excessively fast, however, being about 1 μ sec. This data, plotted in Fig. 7, has an average slope of 2.349, from which the current ratio is found to be 0.972. This value is about 1.5% smaller than the value which was measured previously and about 2.4% smaller than the inductance ratio.

Next, persistent currents were induced by disconnecting suddenly the parallel path circuit from the external circuit under the initial condition that all of the current, I, was flowing through the 5 mil wire branch. The results are presented in tabular form in Table 2. The scatter in the ϵ-values calculated from this data is about 4%, and the trend is for ϵ to be slightly low. This trend, if valid, would

indicate an increase in the flux linkage, assuming that the correct value of ϵ is 0.987. It is more likely, however, that the current increases slightly during the time in which the normal-to-superconducting transition of the 20 mil wire coil takes place and, thus, the initial current reading (before switching) is actually too low. Since the trend was observed for ϵ to be slightly low, even for the slow induction of persistent currents in a different experiment, it appears that this trend is not peculiar to the speed of induction. All of these values of ϵ are within the 4+% error for individual data discussed earlier.

The current division for slow current changes again was measured after having induced a persistent current of about $\frac{1}{2}$A. This data is shown plotted in Fig. 6. The average slope of this line is 2.360, and the corresponding ϵ is 0.981. This value is within 1% of the previously measured value.

Current division was measured again with a persistent current of opposite sense in the loop; however, in this case, the current changes were made quickly. This data is shown in Fig. 7; the slope is 2.355, and the current ratio, ϵ, is 0.977.

The results indicate the following:

(1) All measured ϵ's were slightly lower than the value of ϵ calculated from the inductance measurements; but all values were within the expected range of error.

(2) In general, the values of ϵ for fast current changes are slightly lower than the ϵ's for slow changes. In other experiments with these coils, the values of ϵ for fast changes were found always to be either slightly less than the ϵ for slow current changes or, in some cases, there was no difference at all. These differences in ϵ are

within the expected experimental error, however, and are not necessarily significant. It is possible that this situation is due to a systematic error in performing the experiment; and, in order to test this possibility, current was switched on suddenly and reduced to zero slowly several times. If the fast switching did not conserve flux while the slow current change did, one would expect to observe a shift in the meter's "zero" due to the build-up of a persistent current. No such shift was observed.

2. 20 mil Pb and 15 mil Sn circuit. Experimental work using a 20 mil Pb and 15 mil Sn circuit was performed at a temperature of $\sim 3.5^{\circ}K$. A persistent current was observed again for about one hour to test the superconducting property of the loop. No loss was observed, thus insuring that the loop was superconducting and that the resistivity of the Sn was less than $2.1 \times 10^{-16} \Omega$-cm. A current division for an I of 0.5A was then observed for about two hours. No change in current division was observed; thus, the resistivity of Sn for a current division was found to be less than $2.25 \times 10^{-16} \Omega$-cm. (The upper limits which were found previously for the resistance of Pb were used to calculate the resistance limits for Sn.)

The calibration curve for this circuit and also the current division data obtained for slow current changes with and without a persistent current flow are shown in Fig. 8. The values of ϵ calculated from this data are 1.009 with no persistent current and 1.013 with a persistent current.

The data obtained with fast current changes are shown in Fig. 9. The values of ϵ are 1.004 and 1.006 without and with the persistent current respectively.

Table 3 shows some data obtained for both fast and slow induction of persistent currents. The variation in ϵ is about 3% with no significant

differences between the fast and slow induction data.

The results indicate the following:

(1) The values of ϵ measured by means of the current division all are within 1% of the inductance ratio of 1.010 ± .018.

(2) Again it was found that the ϵ's for fast current changes generally were lower than the ϵ's for slow current changes. However, since all ϵ values are within the experimental error, and since no persistent current could be induced by the technique previously mentioned, this difference in ϵ supposedly is not produced by the superconductors.

In conclusion, it can be stated that, under the conditions of the present experiment, all measurements are consistent with the conservation of the flux of induction and, equivalently, the zero resistance of the superconductors.

3. Currents in excess of the critical current. Before the current division experiments were performed, questions were raised concerning what would happen when the current in one of the superconducting branches reached its critical value, that is, the value of that current which would drive the branch into the normal state. Would all current switch to the branch that remained in the superconducting state; or would the current drop to a value just small enough to allow the normal branch to return to the superconducting state? For both circuits considered in this paper, the B coils had critical currents which were considerably less than the critical current of coil A. It always was found that, upon increasing the current, I, past the point where the flux-conserving current division required a current equal to the critical current in coil B, the current in coil B would begin to increase but then would drop back to its critical current value. Then, upon reducing I, a

persistent current would be induced.

This same type of experiment was performed by switching on a current which would cause I_B to become greater than the critical current. The current in the B coil increased exponentially with the time constant of I to a value near the flux-conserving current value but then immediately decreased exponentially, with a much larger time constant, until it became steady at the critical current level. Of course, as the current in coil B decreased, the current in coil A increased, so that the total current, I, remained constant.

The current in coil B always was able to return to its original critical value. This probably was due to the close thermal contact existing between the coil and the helium bath. If the energy produced by the current flowing in the resistive coil could not have been dissipated, the coil's increased temperature would have lowered its critical current; and thus, the coil could not have returned to the superconducting state until its current had dropped to some value less than the original critical current value.

B. Induction of Persistent Currents. The transient of primary interest for the parallel path circuit is that transient which occurs when a persistent current is induced suddenly by disconnecting the current source. It is of initial interest to discover if the parallel path circuit oscillates upon switching, as was predicted by the circuit theory. We know from the previous data that, if oscillations do occur, they must be damped out rather quickly or the steady state fields, measured after the sudden inductions, would not have been observed. In addition, the steady state persistent current data indicate that the flux-conserving persistent current is induced and, therefore, that, under the given experimental

conditions, no measurable effective series component of resistance is present during the transient.

A typical persistent current induction transient for the Pb-Sn circuit is shown in Fig. 10. The upper trace, the voltage across one of the branch's search coils, indicates oscillations at a frequency of 4×10^6 cps. The lower trace shows the current variation in the coil leads as measured across the small resistance in series with the parallel path circuit. Since the circuit external to the parallel path circuit still is connected to the parallel path circuit during the damping of the oscillations, its resistance undoubtedly plays some part in the damping rate. Since this external resistance is unknown, it is impossible to determine the presence of any resistance contributed by the superconductors. An approximate value for the distributed capacitance of the parallel path circuit can be calculated if the frequency is assumed to be given by $\omega = \left[\frac{2}{LC}\right]^{\frac{1}{2}}$. This capacitance value is 160 $\mu\mu$f.

A large capacitor was placed in parallel with the coils in order to reduce the resonant frequency of the parallel path circuit. Then it was possible to disconnect the current source in a time which was very short compared to the period of oscillation. Therefore, the only sources of resistance which could damp the oscillations were the added capacitor and the superconducting coils.[15] Experiments were performed with the 20 mil Pb-15 mil Sn wire circuit and with an all 20 mil Pb wire circuit. Damped oscillations were observed, see Fig. 11, and in all cases the remaining

[15] The coupling of the measuring coil with the superconducting coil also could provide a dissipative mechanism; however, this effect is negligible compared to the actual resistances measured. For perfect coupling it is estimated that this coupling would introduce a little less than 1% decrease in voltage amplitude in two milliseconds at a frequency of 20 kcps.

persistent current conserved flux to well within the expected experimental error of ~4%.

Measurements were made on the capacitors at liquid helium temperatures to determine their d.c. leakage resistances and their a.c. series resistances and capacitances. The leakage resistances were measured with a ballistic galvanometer[16] and were found to be larger than $10^{10}\Omega$; therefore, this parameter was neglected. A General Radio Capacitance Bridge Type 716-BS3 was used to measure the series capacitances and dissipation factors, D. From the dissipation factors, the series resistances of the capacitors can be determined, $R_s \approx \frac{D}{\omega C}$.

The important result obtained from these experiments was that, in all cases, the circuit's natural frequency of oscillation, as calculated from the measured values of the inductances and capacitance, was less than the observed frequency. This frequency difference was larger than could be explained by the errors in measurement, being typically 4%. In addition, this difference between calculation and experiment is made even larger by any attempt to include in the frequency calculation the effects of resistance or inductance associated with the added capacitance, or any stray capacitances in the circuit. The coupling of the superconducting inductances with the measuring coils does provide a way in which the calculated frequency can be increased, since this coupling decreases the effective inductance of the superconducting coils. However, even for the most ideal coupling conditions, calculation reveals that the effective changes in the superconducting inductances can be only about one part in 10^8. Therefore, it appears that this shift in frequency is a valid phenomenon produced by the superconducting coils.

---

[16] See e.g. Page and Adams, Principles of Electricity, D. VanNostrand Co., Inc., 1949, p. 476.

A very reasonable, physically plausible, explanation for this frequency shift can be found by considering a two-fluid model of superconductivity. In such a model, at any finite temperature less than the critical temperature, there exist in the superconductor both superconducting and normally conducting electrons. The superconducting current is expected to flow primarily on the surface of the wire; whereas, any normal current is expected to be able to flow throughout the cross-section of the wire. Thus, in the present situation, a superconducting coil should be represented by a superconducting current path having an inductance L_s and no resistance, and a normal current path having an inductance L_n and a resistance R_n. These two paths are magnetically coupled by a mutual inductance, M, Fig. 12.

The analysis of the data utilizing the two-fluid model equivalent circuit for the superconducting inductances is presented in the appendix. It is shown that a consistent set of circuit parameters, which explain the data, can be found.

CHAPTER VI

CONCLUSIONS

It has been shown that the d.c. resistivities of superconducting Pb and Sn, both for a persistent current flow and for a current flow originating external to the superconductor, are at least less than $\sim 2.5 \times 10^{-17} \Omega$-cm and $\sim 2.3 \times 10^{-16} \Omega$-cm respectively. It also was verified that the current division between the two branches of a parallel path circuit and the persistent currents induced in this circuit satisfied the constant flux linkage condition to within the experimental error, which was better than 5% in all cases and better than 1% in many cases. Therefore, all steady state current measurements occurring after either slow or sudden (~ 1 μ sec) current changes were consistent with the assumption that superconductors have zero resistance.

The prediction was verified that the parallel path circuit would oscillate in such a way as to conserve both flux and energy upon suddenly disconnecting the current source under the initial condition that all current flowed down one path. The energy loss between the initial state (oscillating current) and final state (persistent current) then could be explained by a Joule heat energy loss in the circuit. For the unmodified circuit, this resistance could be associated with the circuit external to the parallel path circuit, since it was not possible to disconnect the current source before the oscillations had damped out.

The parallel path circuit next was modified by adding a shunting capacitor. Accurate bridge measurements at ~ 1000 cps of the values of inductance, capacitance, and resistance in the circuit failed to explain

the frequency of oscillation which was observed experimentally. An equivalent circuit, based upon a two-fluid model, was proposed which could explain the data, and calculated values of the unknown parameters in this equivalent circuit were found to be reasonable. In addition, the calculated value of the a.c. resistivity for Pb at 50 cps using these calculated values agreed with published data on Pb obtained calorimetrically to within an order of magnitude.

In conclusion, it appears that a complete description of a superconductor in an electrical circuit can be obtained by replacing the superconductor with the equivalent circuit shown in Fig. 13. The important consequences of this circuit are the following: (1) The d.c. resistance is zero and thus the constant flux linkage condition is valid. (2) Under any transient or a.c. conditions, an effective a.c. resistance is present. This a.c. resistance produces a power loss and, therefore, local heating of the superconductor. If this local heating were great enough, the critical current and critical field of the superconductor would be decreased noticeably and, perhaps, the superconductor could be driven normal. (This effect may be an important factor in explaining the superconducting-to-normal transitions of Type II superconductors which are experienced under either fast current or magnetic field changes even though these currents and fields are far less than critical.) (3) The distributed capacitance in conjunction with the superconductor's inductance forms an LC circuit. This situation can produce oscillations at a resonant frequency and also can affect the frequency response of the circuit.

APPENDIX

ANALYSIS OF THE RESONANT FREQUENCY OSCILLATION DATA

The addition of a shunting capacitor to the parallel path circuit forms an LC circuit having a resonant frequency of approximately $\frac{1}{2\pi}\sqrt{\frac{L_1 + L_2}{L_1 L_2 C}}$. This circuit can be excited into a freely oscillating mode of operation at its resonant frequency by suddenly switching off the external current, under the initial condition that this external current passes through only one of the two inductances. It was discovered experimentally that the observed resonant frequency of the circuit was greater than that frequency predicted by the low-frequency measurements of L_1, L_2, and C. Furthermore, this discrepancy is made worse by attempting to include the effects upon the frequency of the resistances and the inductance of the capacitor. The coupling of the circuit with the measuring coil does produce a frequency change in the right direction, but, even assuming ideal coupling, this change (about one part in 10^8) is too small to be detectable.

In the following section, an equivalent circuit for a superconducting coil, which is based upon a two-fluid model of a superconductor, is presented as an explanation of the data. Calculations are performed using the experimental data in order to obtain the unknown values of quantities used in the equivalent circuit. A complete set of quantities, which appears to explain the data, is found to appear physically plausible. In addition, comparison of an a.c. resistivity calculated from these quantities with a value of a.c. resistivity obtained from data published concerning a different type of experiment on Pb indicated agreement to

within an order of magnitude.

A. Equivalent Circuit for a Superconducting Coil. According to presently accepted theories of the superconducting state, at any finite temperature less than the transition temperature, a superconductor contains both superconducting and normally conducting electrons. Since a voltage drop occurs across a superconducting coil when there is a current change, the normal electrons should be accelerated. Since this normal current experiences a resistance, an energy loss occurs in the coil. Therefore, it appears reasonable that, in order to describe a superconducting coil experiencing current changes, a circuit of the form shown in Fig. 12 is required. In this equivalent circuit, there is a complete superconducting path through the coil as well as a resistive path, and these two paths are coupled magnetically by a mutual inductance.

At any given frequency, an effective a.c. inductance and an effective a.c. resistance can be found for the coil by comparing the real and imaginary parts of the admittances of the circuits in Fig. 12 and Fig. 14. For the circuit of Fig. 12,

$$\frac{i}{E} = \frac{[(L_s + L_n - 2M)L_s - (L_s L_n - M^2)]R_n}{R_n^2 L_s^2 + \omega^2 (L_s L_n - M^2)^2} - j\left[\frac{\omega^2 (L_s + L_n - 2M)(L_s L_n - M^2) + R_n^2 L_s}{\omega R_n^2 L_s^2 + \omega^3 (L_s L_n - M^2)^2}\right] \tag{1}$$

and for the circuit in Fig. 14,

$$\frac{i}{E} = \frac{1}{R_{eff}} - j\frac{1}{\omega L_{eff}} \quad . \tag{2}$$

Comparison of (1) and (2) gives

$$R_{eff} = \frac{R_n^2 L_s^2 + \omega^2 (L_s L_n - M^2)^2}{[(L_s + L_n - 2M)L_s - (L_s L_n - M^2)]R_n}$$

Fig. 15 can be found by equating the real and imaginary parts of the impedance of each circuit. For the circuit of Fig. 15,

$$\frac{E}{i} = \frac{R_1 + R_2 + \omega^2 C^2 R_1 R_2^2}{1 + \omega^2 C^2 R_2^2} - j\left(\frac{R_2^2 \omega C - \omega L_c - \omega^3 C^2 L_c R_2^2}{1 + \omega^2 C^2 R_2^2}\right) \tag{5}$$

and for the circuit of Fig. 16,

$$\frac{E}{i} = R_s - j\frac{1}{\omega C_s} \quad . \tag{6}$$

Equating the real and imaginary parts of (5) and (6)

$$R_s = R_1 + \frac{R_2}{1 + \omega^2 C^2 R_2^2} \quad , \tag{7}$$

$$C_s = \frac{1 + \omega^2 C^2 R_2^2}{R_2^2 \omega^2 C - \omega^2 L_s - \omega^4 C^2 L_s R_2^2} \quad . \tag{8}$$

Since L_s is expected to be small, its effect on C_s at 1000 cps should be negligible compared to the accuracy of the measurement and, therefore, will be neglected. Thus, C_s is given by

$$C_s = C + \frac{1}{R_2^2 \omega^2 C} \quad . \tag{9}$$

C. <u>The Complete Transient Solution</u>. The solution to the transient problem, with the equivalent circuit shown in Fig. 12 replacing each of the superconducting coils, is extremely difficult. Since the frequency of oscillation is constant and since the change in the voltage amplitude across the coils changes slowly in comparison with the period of oscillation, the a.c. equivalent circuit shown in Fig. 14 can replace the actual equivalent circuit to a very good approximation.

The complete superconducting parallel path circuit with added capacitance is shown in Fig. 17, where the effective resistances of each coil have been lumped together for convenience. The equations

which must be solved are

$$L_{1eff}\frac{di_1}{dt} = R\,i_6 = R_2 i_4 + R_1 i_5 = L_{2eff}\frac{di_2}{dt} \quad ,$$

$$R_2 i_4 = \frac{1}{C}\int_0^t i_3\,dt \quad ,$$

$$i_1 + i_2 + i_5 + i_6 = 0 \quad , \quad t > 0 \quad ,$$

$$i_3 + i_4 = i_5 \quad ,$$

$$i_1(0) = I \quad , \quad i_2(0) = i_3(0) = i_4(0) = i_5(0) = i_6(0) = 0 \quad ,$$

$$V_c(0) = 0 \quad .$$

The solution for i_1 is

$$i_1 = \frac{I\,L_{2eff}}{L_{1eff} + L_{2eff}}\left[\frac{L_{1eff}}{L_{2eff}} + \left\{\cos\omega t + \frac{\sin\omega t}{A}\right\} e^{-t/\tau}\right]$$

where

$$A = \left[\frac{4R^2R_2^2C\,\dfrac{L_{1eff}\,L_{2eff}}{L_{1eff} + L_{2eff}}}{\left[\dfrac{L_{1eff}\,L_{2eff}}{L_{1eff} + L_{2eff}}(R_1 + R_2 + R) - RR_1R_2C\right]^2} - 1\right]^{\frac{1}{2}} \quad ,$$

$$\omega = \left[\frac{L_{1eff} + L_{2eff}}{L_{1eff}\,L_{2eff}\,C}\left(\frac{R}{R + R_1}\right)^2 - \left\{\frac{\dfrac{L_{1eff}\,L_{2eff}}{L_{1eff} + L_{2eff}}(R_1 + R_2 + R) - RR_1R_2C}{2\dfrac{L_{1eff}\,L_{2eff}}{L_{1eff} + L_{2eff}}\,C\,R_2(R_1 + R)}\right\}^2\right]^{\frac{1}{2}} ,$$

and

$$\frac{1}{\tau} = \frac{\dfrac{L_{1eff}\,L_{2eff}}{L_{1eff} + L_{2eff}}(R_1 + R_2 + R) + RR_1R_2C}{\dfrac{L_{1eff}\,L_{2eff}}{L_{1eff} + L_{2eff}}R_2C(R + R_1)} \quad .$$

The voltage amplitude is proportional to $e^{-t/\tau}$, and the ratio of the voltage amplitudes measured at times t_1 and t_2 is

$$\frac{|V_1|}{|V_2|} = e^{-(t_1 - t_2)/\tau}$$

or
$$\frac{1}{\tau} = \frac{\ln \frac{|V_1|}{|V_2|}}{t_2 - t_1}$$

It is the frequency and τ which can be measured.

D. Calculations. We now have the following set of equations:

$$R_{eff} = \frac{R_n^2(1-\alpha)^2 + \omega_1^2 L_n^2 (2\beta - \beta^2 - \alpha)^2}{(\alpha-\beta)^2 R_n}, \qquad \text{(a)}$$

$$L_{eff} = L_n \left\{ \frac{R_n^2(1-\alpha)^2 + \omega_1^2 L_n^2 (2\beta - \beta^2 - \alpha)^2}{R_n^2(1-\alpha) + \omega_1^2 L_n^2 (2\beta-\alpha)(2\beta-\beta^2-\alpha)} \right\}, \qquad \text{(b)}$$

$$R_s = R_1 + \frac{R_2}{1 + \omega_2^2 C^2 R_2^2}, \qquad \text{(c)} \qquad (10)$$

$$C_s = C + \frac{1}{R_2^2 \omega_2^2 C}, \qquad \text{(d)}$$

$$\omega_1 = \left[\frac{L_{1eff} + L_{2eff}}{L_{1eff} L_{2eff} C} \left(\frac{R}{R+R_1} \right)^2 - \left\{ \frac{L_{1eff} L_{2eff}}{L_{1eff} + L_{2eff}} (R_1 + R_2 + R) - \frac{R R_1 R_2 C}{2 \frac{L_{1eff} L_{2eff}}{L_{1eff} + L_{2eff}} C R_2 (R_1 + R)} \right\}^2 \right]^{\frac{1}{2}}, \qquad \text{(e)}$$

$$\frac{1}{\tau} = \frac{\frac{L_{1eff} L_{2eff}}{L_{1eff} + L_{2eff}} (R_1 + R_2 + R) + R R_1 R_2 C}{\frac{L_{1eff} L_{2eff}}{L_{1eff} + L_{2eff}} R_2 C (R + R_1)}. \qquad \text{(f)}$$

Only the quantities ω_1, ω_2, R_s, C_s, and $\frac{1}{\tau}$ are measured directly; therefore, there are several more unknowns than equations. The situation is not hopeless, however, since certain choices for some of the quantities, such as $R < 0$ and α or $\beta < 0$ or > 1 are forbidden, and reasonable estimates can be made about the values of some of the unknowns.

The inductances of the coils were measured in the superconducting state at $\sim 10^3$ cps. According to (10b), it is actually L_{eff} which is

measured, but at low frequencies $L_{eff} \simeq L_s$. This, in fact, was verified by the current division experiments. (By using the values of α, β, and R_n, which we will calculate, it can be shown that L_{eff} at 1000 cps is equal to L_s to within about 0.2%, a substantially smaller percentage error than is claimed for the measurement in the first place.) Therefore, the measured inductance at $\sim 10^3$ cps will be used for the superconducting path inductance, L_s.

The normal electrons are not confined to the surface; therefore, with regard to the normal path, the wire will be treated as an ordinary conductor. Thus, the measured value of the normal inductance will be used for the inductance of the normal path, L_n. Using L_n and L_s, α can be calculated.

In order to simplify the calculations further, "average" values of L_s and L_n will be used in the equations rather than separate values for each coil. This simplification is not especially restrictive, since the coil inductances are approximately equal and it is the term $\frac{L_1 L_2}{L_1 + L_2}$ which enters into the equations.

From equations (10c) and (10d), a minimum value of R_2 can be found by setting $R_1 = 0$. It can be shown then that, to within the experimental error claimed for the capacitance bridge measurements, C_s is equal to C at 1000 cps.

If α, L_n, and C are assumed to be known, there are only six unknowns remaining. There are, however, only five useful equations, since equation (10d) has been used to its fullest extent. The value of L_{eff} can be found to a good approximation simply by setting $\omega_1 = \sqrt{\frac{2}{L_{eff} C}}$. This comes about because the correction to the frequency due to the resistances is relatively small. We are now left with five unknowns and four equations.

The remaining unknown about which we can make the best estimate is R_n. The normal resistances of the coils were measured below their transition temperatures ($4.2^{o}K$ for Pb and $\sim 3.5^{o}K$ for Sn) while in magnetic fields greater than their critical fields. This provides at least a reasonable order of magnitude value for R_n with which to make some calculations. (The quantity β is nearly insensitive to the choice of R_n; however, R_{eff} is quite dependent upon R_n.)

With the value of R_n, assumed known, there are left four unknowns and four equations. The procedure to calculate the remaining unknowns will be to obtain β from equation (10b), use this value of β in (10a) to find R_{eff}, eliminate R_1 in equation (10f) by equation (10c) and, with R_{eff} available, solve for R_2. Then, (10c) will be used to obtain R_1.

1. <u>Pb - Pb circuit at ~20 kcps</u>. First, consider the capacitor's parameters. The bridge measurements were made at 1007.5 cps ($\omega = 6.3303 \times 10^3$), and, for the capacitor used in this circuit, $R_s = 0.1776\Omega$ and $C_s = 6.594\ \mu f$. A minimum value of R_2 can be found by setting $R_1 = 0$ in equation (10c) and using this equation in conjunction with (10d). The value of $R_{2\ min}$ thus found is 3231.6Ω. A minimum value for C can be found also, $C_{min} = 6.5936\ \mu f$; therefore, from here on, C will be taken as $6.594\ \mu f$. (It may be of interest to note that a minimum value of R occurs for $R_1 = 0$ and $R_2 = R_{2\ min}$. This value can be calculated from equation (10f), $R_{min} = 109.2\Omega$.)

The measured values of inductance for the two Pb coils used in this circuit were $L_{n1} = 19.79\ \mu h$, $L_{s1} = 19.52\ \mu h$, $L_{n2} = 19.63\ \mu h$, and $L_{s2} = 19.28\ \mu h$. Thus, average inductance values for this circuit are $L_n = \frac{2L_{n1}L_{n2}}{L_{n1} + L_{n2}} = 19.71\ \mu h$ and $L_s = \frac{2L_{s1}L_{s2}}{L_{s1} + L_{s2}} = 19.40\ \mu h$. The quantity α is then given by $\alpha = \frac{L_n - L_s}{L_n} = 1.573 \times 10^{-2}$.

The average value of the inductance necessary to produce the measured frequency is given by $L_{eff} = \frac{2}{\omega^2 C}$. Since ω was observed to be 1.2763×10^5 radians per second, $L_{eff} = 18.62\ \mu h$.

Now, assuming R_n equal to the measured value of the coil resistance in the normal state, $R_n = 0.7168 \times 10^{-3}\Omega$, all quantities are available to calculate β. Rearranging equation (10b) into an equation in β, one obtains

$$\beta^4 - 2\left[2 - \frac{L_{eff}}{L_n}\right]\beta^3 + \left\{\left[1 - \frac{L_{eff}}{L_n}\right](\alpha+4) + \alpha\right\}\beta^2$$
$$-4\alpha\left[1 - \frac{L_{eff}}{L_n}\right]\beta + \left[1 - \frac{L_{eff}}{L_n}\right]\alpha^2$$
$$+ \frac{R_n^2}{\omega^2 L_n^2}(1-\alpha)\left[1 - \alpha - \frac{L_{eff}}{L_n}\right] = 0 \quad .$$

Using the values given above to calculate the coefficients,

$\beta^4 - 2.11060\beta^3 + 0.237808\beta^2 - 3.4795 \times 10^{-3}\beta + 1.3757 \times 10^{-5} = 0.$

The appropriate solution to this equation is $\beta = 0.849 \times 10^{-2}$; or, in terms of the coupling constant, k, where $M = k\sqrt{L_s L_n}$, $k = 0.999402$.

Using this value of β in equation (10a), the effective resistance of one coil can be calculated, $R_{eff} = 246.94\Omega$. Eliminating R_1 in equation (10f),

$$\frac{1}{\tau} = \frac{L_{eff}(R_1 + R_2 + R) + 2R_1R_2RC}{2L_{eff}R_2C(R_1+R)} \quad ,$$

by means of equation (10c),

$$R_1 = R_s - \frac{1}{\omega_2^2 C^2 R_2} \quad ,$$

one obtains the equation for R_2,

$$R_2^2\left\{L_{eff}\left[1 - \frac{2C}{\tau}(R+R_s)\right] + 2RR_sC\right\} + R_2\left\{L_{eff}\left[R + R_s + \frac{2}{\omega_2^2 C\tau}\right] - \frac{2R}{\omega_2^2 C}\right\}$$
$$- \frac{L_{eff}}{\omega_2^2 C^2} = 0 \quad .$$

Using the values previously given, the coefficient can be calculated, $2.86012 \times 10^{-4} R_2^2 - .943482 R_2 - 1.06865 \times 10^{-2} = 0$. The appropriate solution to this equation is $R_2 = 3298.7\Omega$. This requires that R_1 be 0.0036Ω.

2. Pb - Pb circuit at ~60 kcps. The capacitor used in this experiment was measured at a frequency of 1007.5 cps also and had the values $R_s = 0.8023\Omega$, $C_s = 0.7366$ μf. Again, $C_s \doteq C$ to within the experimental error of the measurement ($C_{min} = 0.73659$ μf) and $R_{2\ min}$ is found to be $28{,}898\Omega$. (The value of R_{min} is 472.8Ω.)

The average value of the inductance necessary to produce the measured frequency, $\omega = 3.7699 \times 10^5$ rad/sec, is 19.10 μh. If the same values of L_s and L_n are used for this calculation as were used in section 1, the β equation becomes, $\beta^4 - 2.06190\beta^3 + 0.140013\beta^2 - 1.94731 \times 10^{-3}\beta + 0.765902 \times 10^{-5} = 0$. The appropriate solution to this equation is $\beta = 0.924 \times 10^{-2}$.

This value of β produces a value of R_{eff} of $13{,}001\Omega$.

The equation for R_2 is $0.743499 \times 10^{-2} R_2^2 - 4.40306 \times 10^2 R_2 - 0.878457 = 0$ and has the solution $R_2 = 59{,}221\Omega$. Therefore, R_1 is 0.0257Ω.

3. Pb - Sn circuit at ~20 kcps. The measurements on the capacitor again were made at 1007.5 cps and it was found that $R_s = 0.0884\Omega$ and $C_s = 6.555$ μf. The minimum value that R_2 can have is 6570Ω and the minimum value for C is 6.5549 μf. Once again, C_s will be used for C in the calculations. (The minimum value for R is 102.6Ω.)

The measured values of inductance for the coils used in this experiment were 19.63 μh and 19.41 μh for the Sn coil in the normal and superconducting states respectively and 19.63 μh and 19.28 μh for the Pb

coil in the normal and superconducting states respectively. The calculated value of α for the Sn coil is 1.12073×10^{-2}.

The observed frequency was 2.0188×10^4 cps or 1.2685×10^5 rad/sec. Using $\omega^2 = \frac{2}{LC}$, the value of L must be 18.96 μh. Since the effective inductance of the Pb coil at this frequency is 18.54 μh (using the values of α and β calculated for Pb at ~20 kcps), the effective inductance of the Sn coil must be 19.40 μh. Thus, for the Sn coil, the β equation becomes $\beta^4 - 2.02343\beta^3 + 5.82066 \times 10^{-2}\beta^2 - 5.25261 \times 10^{-4}\beta + 1.484934 \times 10^{-6} = 0$, where the measured value of the normal resistance for the Sn coil, $1.276 \times 10^{-2}\Omega$, is used for R_n. There are two possible physical solutions to this equation, $\beta = 0.585 \times 10^{-2}$ and $\beta = 0.889 \times 10^{-2}$, which correspond to values of the coupling constant of 0.999759 and 0.996685 respectively. One intuitively would suspect that the larger coupling constant is the actual value, since k should approach 1 as the wire size becomes smaller, and the value of k for the Pb wire at 20 kcps was .999402.

Using 0.585×10^{-2} for the value of β, the value of R_{eff} for the Sn coil is 438.2Ω. (For $\beta = 0.889 \times 10^{-2}$, $R_{eff} = 6139.1\Omega$.) Since the value of R_{eff} for the Pb coil is 242.2Ω, $R = 155.98\Omega$. (For $R_{eff} = 6139.1\Omega$, $R = 233.01\Omega$.) This means that $R_1 = 0.0050\Omega$ and $R_2 = 696{,}731\Omega$. (For $R = 233.01\Omega$, $R_1 = 0.0079\Omega$ and $R_2 = 7215.5\Omega$.)

E. <u>Discussion of the Results</u>. In addition to the fact that the data could be explained by fitting a set of numbers to the parameters of the proposed model of the superconducting coils (these circuit values are presented in tabular form in Table 4), there are several facts about these calculated numbers that agree with our intuitive ideas about the model: (1) The calculated values of β are quite small (or k is very

close to 1), and a value of β was found for the 15 mil Sn wire which was less than the values of β calculated for the 20 mil Pb wire. (2) The calculated values of R_{eff} were always larger than the minimum permissible values but were small enough that R_1 had to be only a small portion of R_s. This is as one might suspect, since the leads of the capacitors were not only short, but they were tinned, so that they were very likely superconducting. In this regard, notice that the smaller capacitor has the greater value of R_1 corresponding to a smaller surface area for the capacitor plates, and values of R_1 for the two similar capacitors (having $C \sim 6.6$ μf) were nearly identical. (3) The values of L_n, L_s, M and R_n are consistent with the bridge measurements at $\sim 10^3$ cps; that is, L_{eff} is L_s to within experimental error, and R_{eff} is too small to have been detected with the bridge measurements. (4) The a.c. loss in a 0.0625" Pb wire coil was measured calorimetrically at 50 cps by Rhodes, Rogers, and Seebold.[17] Their published data indicate a resistivity for Pb at 50 cps of $\sim 3.0 \times 10^{-11}\Omega$-cm. Using the present data for Pb obtained at 20 kcps, a calculated value of the resistivity for Pb at 50 cps is found to be $6.7 \times 10^{-11}\Omega$-cm. These resistivities agree to within an order of magnitude, and the discrepancy present might be explained by the fact that the Pb used by Rhodes, et al., was of greater purity than the wire used in this experiment, 99.997% as compared to 99.9%. In addition, there are probably corrections to be made for the different wire sizes and the different coil geometries used in the two experiments.

One could attempt to refine the calculations by including such effects as an increase in R_n due to the loss of normal conducting electrons to the superconducting state, and a further increase in R_n,

[17] R. G. Rhodes, E. C. Rogers and R. J. A. Seebold, Cryogenics, 4, #4, p. 206.

as well as a decrease in L_n, due to the skin effect. Deciding how to make such refinements, however, is little more than guesswork. Also, the available data does not warrant such refinements. For example, even though the inductance measurements are accurate to better than 1%, a $\frac{1}{2}$% inductance measurement error could allow a variation of α as large as ± 64%.

SELECTED BIBLIOGRAPHY

General references concerning superconductivity:

1. M. vonLaue, Superconductivity, Academic Press, 1952.

2. F. London, Superfluids Vol. 1, Dover, 1961.

3. D. Shoenberg, Superconductivity, Cambridge, 1962.

4. J. M. Blatt, Theory of Superconductivity, Academic Press, 1964.

References concerning superconducting circuits:

1. Von E. Justi and G. Zickner, "Versuche über Stromverzweigung und Stromverdrängung in Supraleitern," Physik Z., 42, 15 Sept. 1941, p. 257 ff.

2. W. B. Ittner III and C. J. Kraus, "Superconducting Computers," Scientific American, July 1961, p. 125 ff.

3. D. R. Young, "Superconducting Circuits," Progress in Cryogenics, Vol. 1, p. 3 ff, 1959.

4. R. G. Rhodes, E. C. Rogers, R. J. A. Seebold, "Measurement of 50 c/s Losses in Superconductors," Cryogenics, Vol. 4, #4, p. 206-208, August, 1964.

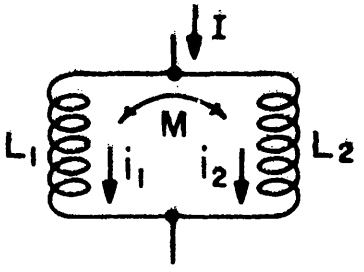

Fig. 1. Basic schematic of the parallel path circuit.

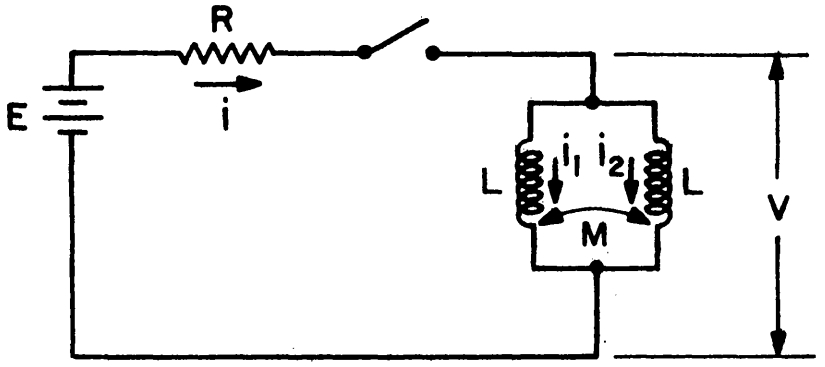

Fig. 2. Parallel path circuit connected to a power source.

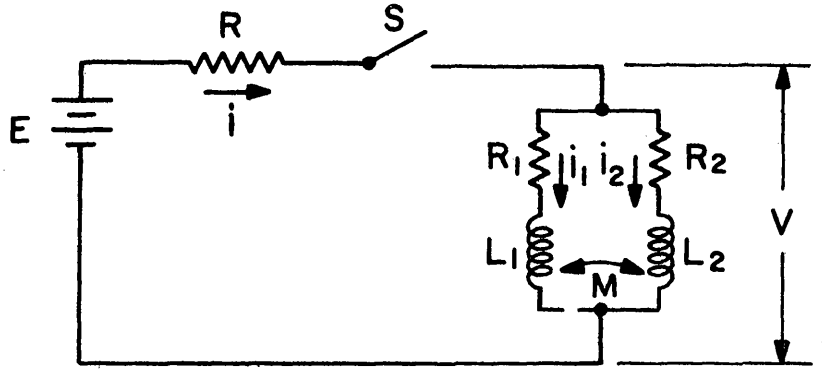

Fig. 3. Parallel path circuit with resistive branches.

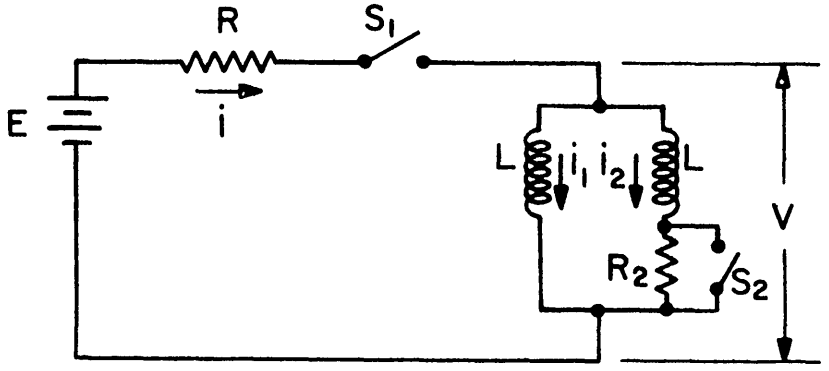

Fig. 4. Parallel path circuit with provision for making one path resistive.

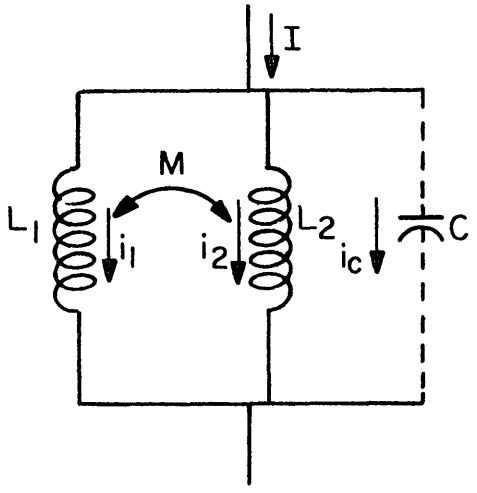

Fig. 5. Parallel path circuit with distributed capacitance included

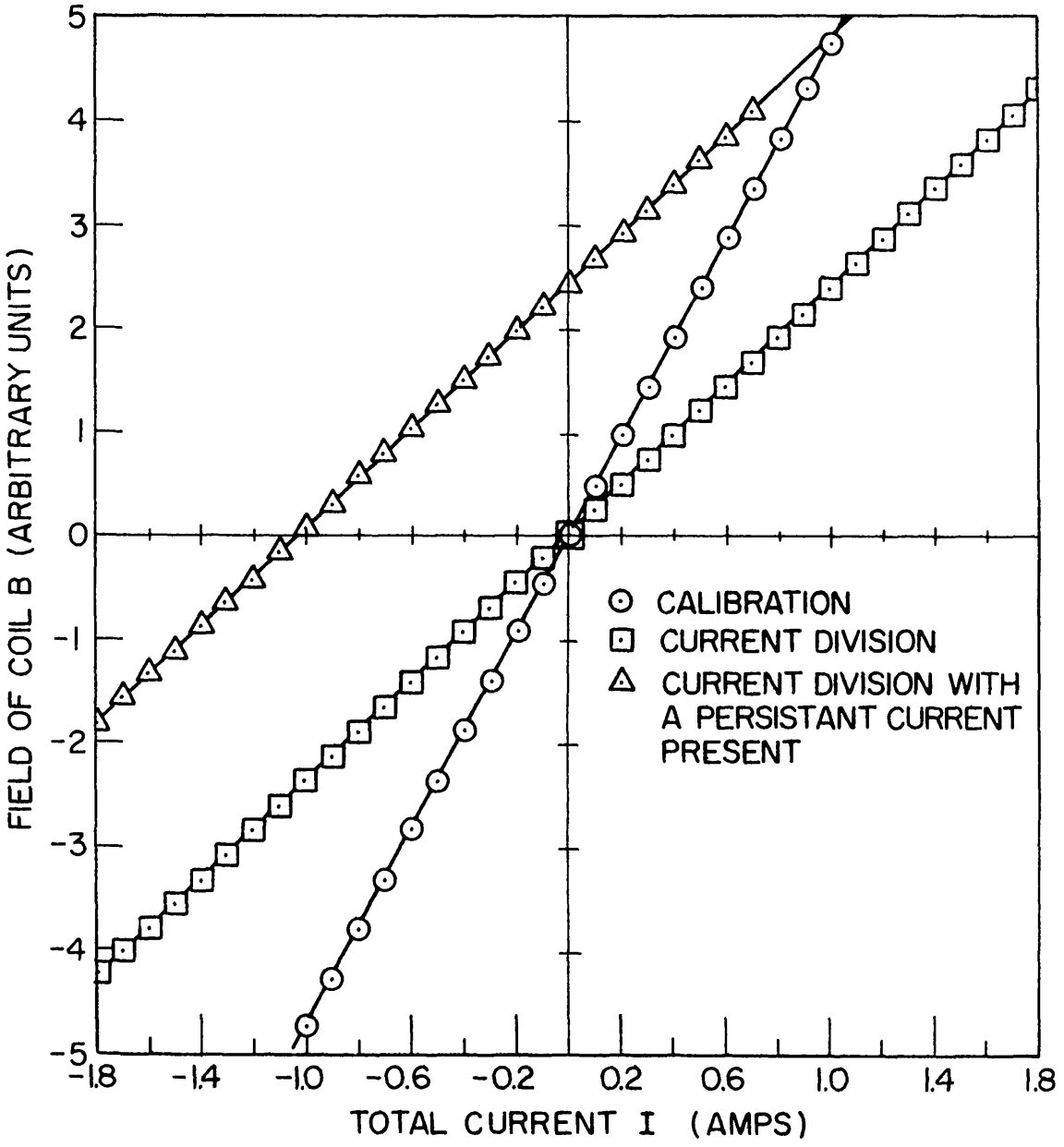

Fig. 6. 20 mil Pb - 5 mil Pb circuit: Current division data for slow current changes

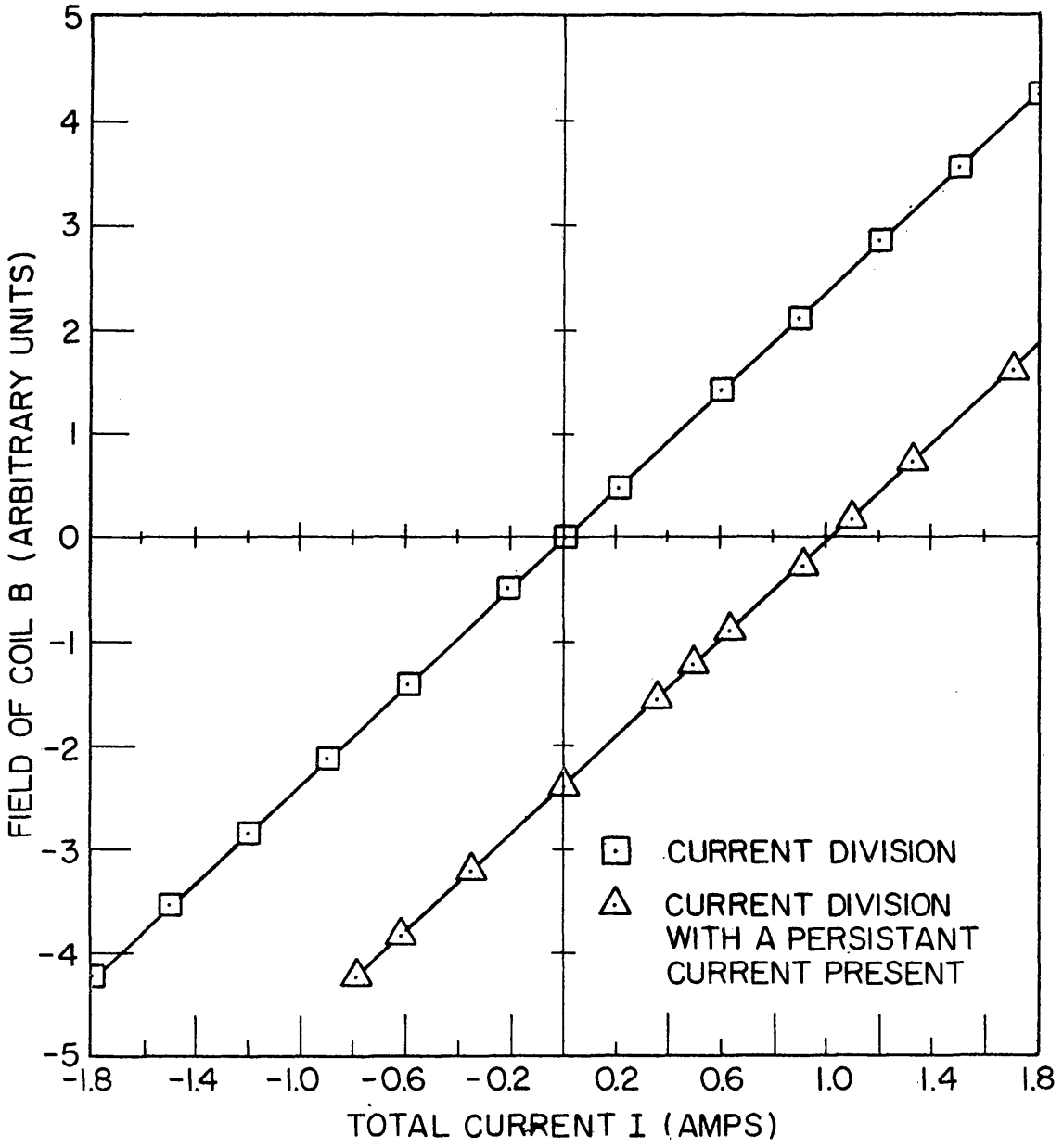

Fig. 7. 20 mil Pb - 5 mil Pb circuit: Current division data for fast current changes.

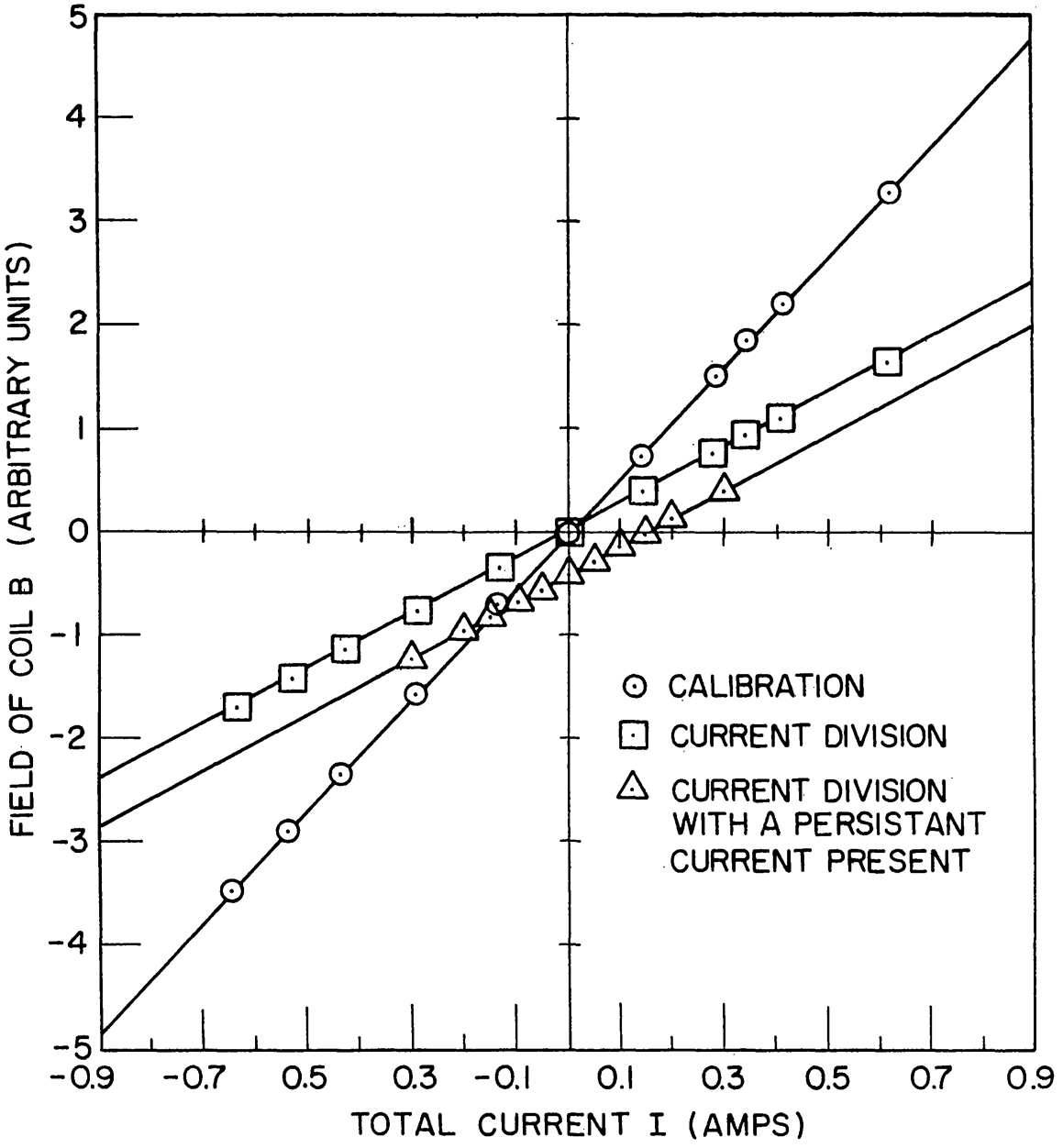

Fig. 8. 20 mil Pb - 15 mil Sn circuit: Current division data for slow current changes.

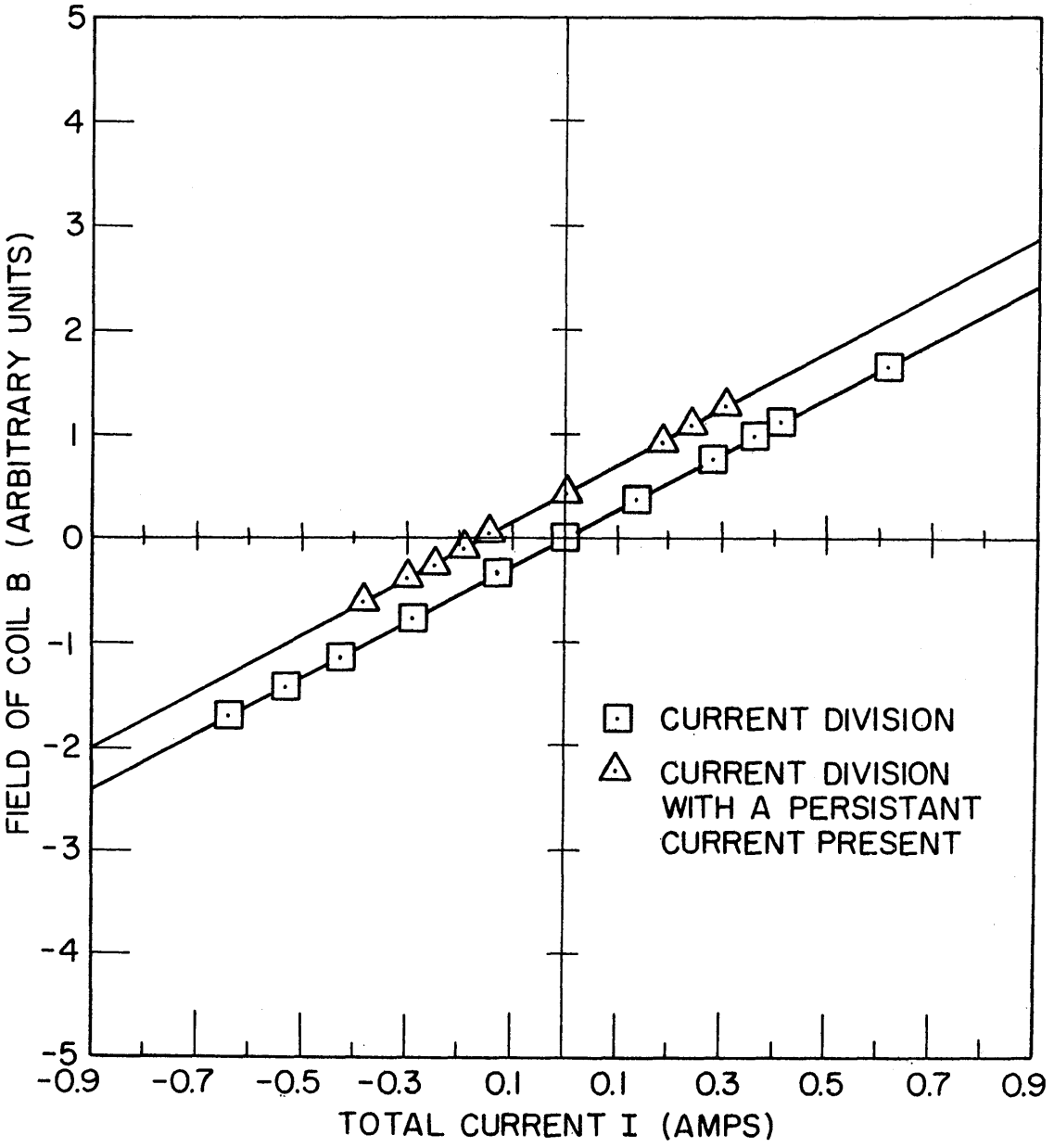

Fig. 9. 20 mil Pb - 15 mil Sn circuit: Current division data for fast current changes.

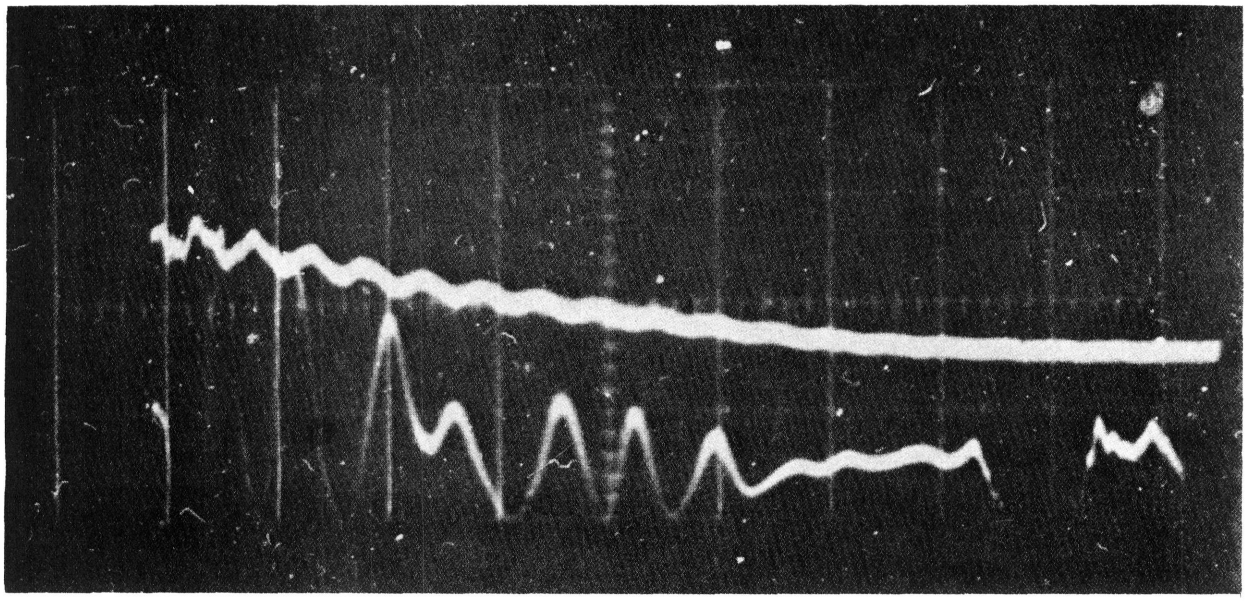

Fig. 10. Persistent current induction transient of the Pb - Sn circuit. (Each major division is 0.5 μ second.)

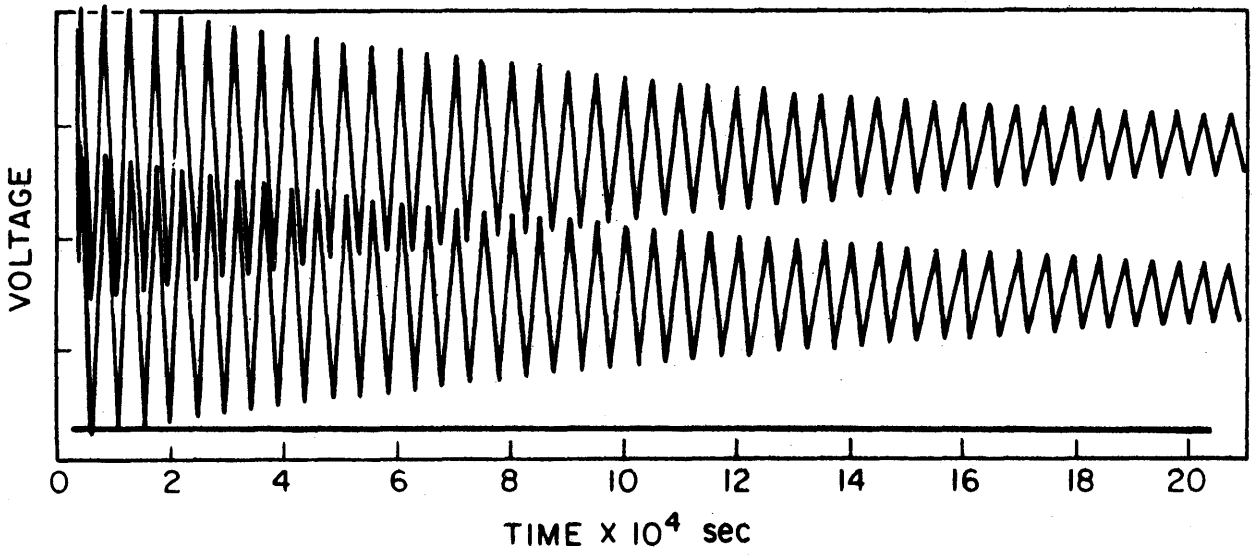

Fig. 11. Persistent current induction transient of the Pb - Sn circuit with added capacitance.

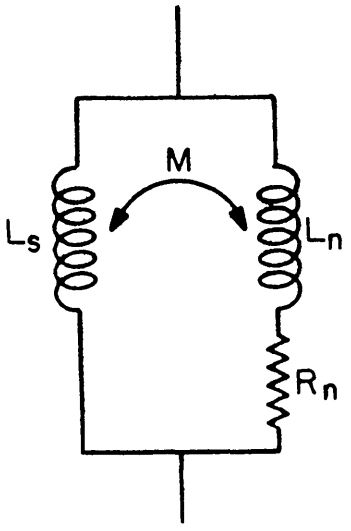

Fig. 12. Equivalent circuit for the superconducting coil.

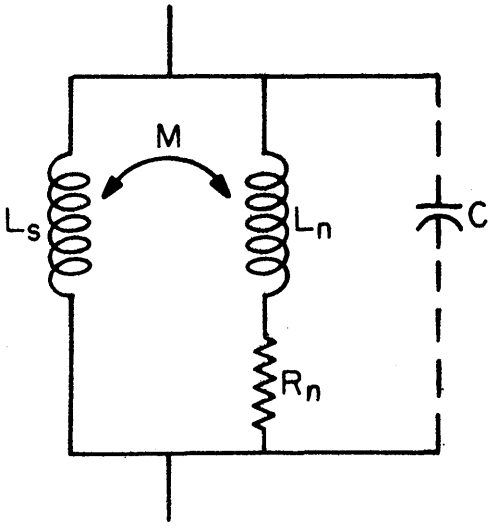

Fig. 13. Complete equivalent circuit for a superconductor.

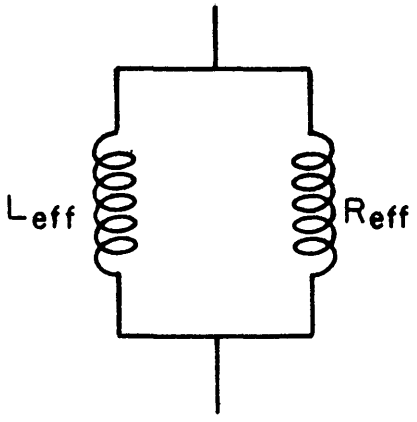

Fig. 14. A.C. equivalent circuit for the superconducting coil.

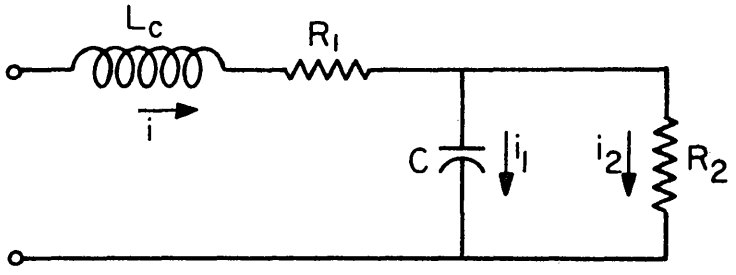

Fig. 15. Equivalent circuit for a capacitor.

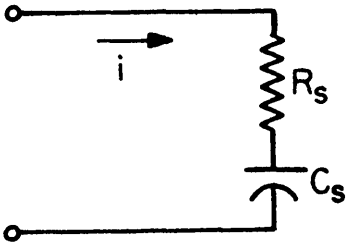

Fig. 16. A.C. equivalent circuit for a capacitor.

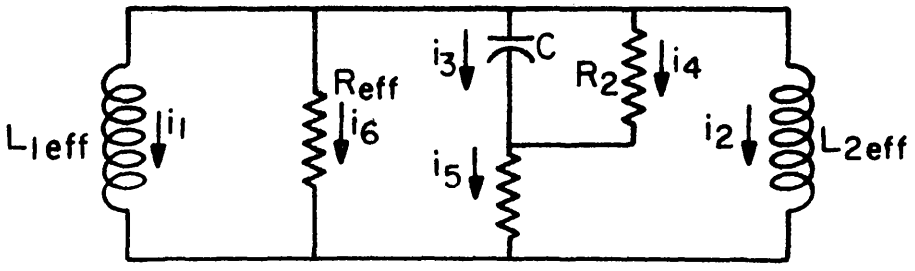

Fig. 17. Superconducting parallel path circuit with added capacitance.

Table 1

Measured and Calculated Values of Coil Inductances

Wire Size (mils)	Normal Inductance, Calculated (μh)	Normal Inductance, Measured (μh)	Superconducting Inductance, Measured (μh)
20	18.88	19.63	19.28
15	18.71	19.27	19.08
5	18.05	19.40	19.37

Table 2

Fast Induction of Persistent Currents

in the 20 mil Pb - 5 mil Pb Circuit

Initial I_{B1} (amp)	Final I_{B1} (amp)	Difference of I_{B1} initial and I_{B1} final	ϵ	% diff. from ϵ_L
-.1987	-.1015	.0972	.9576	-3.76
-.3995	-.2008	.1987	.9895	-0.55
-.5961	-.3002	.2959	.9857	-0.93
-.8012	-.4059	.3953	.9739	-2.12
-.9978	-.5074	.4904	.9665	-2.86
.2029	.1036	.0993	.9585	-3.67
.4038	.2072	.1966	.9488	-4.64
.6046	.3108	.2938	.9453	-4.99
.8054	.4059	.3995	.9842	-1.09
.9978	.5116	.4862	.9504	-4.48

Table 3

Slow (a) and Fast (b) Induction of Persistent Currents

in the 20 mil Pb - 15 Sn Circuit

Initial I_{B1} (amp)	Final I_{B1} (amp)	Difference of I_{B1} initial and I_{B1} final	ϵ	% diff. from ϵ_L	
-.0964	-.0477	-.0487	1.0210	1.09	
-.1986	-.0982	-.1004	1.0224	1.23	
+.0973	.0477	.0496	1.0398	2.95	(a)
.1982	.1000	.0982	.9820	-2.77	
-.0973	-.0486	-.0487	1.0021	-0.78	
-.1991	-.0991	-.1000	1.0091	-0.09	
-.3054	-.1541	-.1513	.9818	-2.79	
+.0982	.0486	.0496	1.0206	1.05	(b)
.2000	.1009	.0991	.9822	-2.75	
.3063	.1541	.1522	.9877	-2.21	

Table 4

Values of the Circuit Parameters

for the Resonant Frequency Oscillation Data

	Pb 20 kcps	Pb 60 kcps	Sn 20 kcps
L_n	19.71 μh	19.71 μh	19.63 μh
L_s	19.40 μh	19.40 μh	19.41 μh
α	1.573×10^{-2}	1.573×10^{-2}	1.12073×10^{-2}
L_{eff}	18.62 μh	19.10 μh	19.40 μh
R_n	$0.7168 \times 10^{-3}\Omega$	$0.7168 \times 10^{-3}\Omega$	$1.276 \times 10^{-2}\Omega$
β	0.849×10^{-2}	0.924×10^{-2}	0.585×10^{-2}
k	0.999402	0.998665	0.999759
R_{eff}	246.94Ω	13,001Ω	438.2Ω
R_2	3298.7Ω	59,221Ω	696,731Ω
R_1	0.0036Ω	0.0257Ω	0.0050Ω
$C_{(s)}$	6.594 μf	0.7366 μf	6.555 μf
R_s (1000 cps)	.1776Ω	.8023Ω	.0884Ω

Security Classification

DOCUMENT CONTROL DATA - R&D

(Security classification of title, body of abstract and indexing annotation must be entered when the overall report is classified)

1. ORIGINATING ACTIVITY *(Corporate author)* U.S. Naval Research Laboratory Washington, D.C. 20390	2a. REPORT SECURITY CLASSIFICATION UNCLASSIFIED 2b. GROUP

3. REPORT TITLE

ELECTRODYNAMICS OF A SUPERCONDUCTING PARALLEL PATH CIRCUIT

4. DESCRIPTIVE NOTES *(Type of report and inclusive dates)*

A final report on one phase of the problem.

5. AUTHOR(S) *(Last name, first name, initial)*

King, Everett E.

6. REPORT DATE	7a. TOTAL NO. OF PAGES	7b. NO. OF REFS
May 9, 1965	78	8

8a. CONTRACT OR GRANT NO. NRL Problem E02-02 b. PROJECT NO. RR 010-01-44-5601 c. d.	9a. ORIGINATOR'S REPORT NUMBER(S) NRL Report 6410 9b. OTHER REPORT NO(S) *(Any other numbers that may be assigned this report)*

10. AVAILABILITY/LIMITATION NOTICES

Distribution of this document is unlimited.

11. SUPPLEMENTARY NOTES	12. SPONSORING MILITARY ACTIVITY Dept. of the Navy (Office of Naval Research)

13. ABSTRACT In order to understand better the behavior of superconductors in electrical circuitry, a detailed study is presented of a circuit composed of two superconducting inductances connected in parallel. This circuit forms a closed superconducting path through which the magnetic flux will remain constant only if the resistance of the superconductor is zero. In this regard, an upper limit for the d.c. resistivity of a superconductor is found by two methods. The first method appears in the literature several times and consists of an attempt to detect the decay of a persistent current. The second method has not been reported previously and consists of an attempt to observe between the two branches a current distribution different from that which conserves the flux linkage. These methods differ in that, in the first method, the persistent current exists entirely within the superconductor; whereas, in the second method, the externally supplied current must both enter and leave the superconductor. The transient response of the circuit is investigated also. The flux linkage is verified to remain constant to within an experimental error of ~ 1% for current changes as short as ~ 1 microsecond. A particularly interesting transient is that which occurs when an attempt is made to induce a persistent current suddenly. It is discovered that the more basic "steady state" solution, in this case, is an oscillatory current rather than a persistent current; since the oscillatory current solution conserves the energy stored in the circuit as well as the flux linkage of the circuit. These current oscillations are observed, and it is found that their frequency is greater than the expected frequency which is calculated using bridge measurements. A simple model of a superconducting coil is proposed to explain the data.

DD FORM 1 JAN 64 1473

Security Classification

14. KEY WORDS	LINK A ROLE	LINK A WT	LINK B ROLE	LINK B WT	LINK C ROLE	LINK C WT
Superconductors Electrical circuitry Superconducting inductances Magnetic flux DC resistivity						

INSTRUCTIONS

1. ORIGINATING ACTIVITY: Enter the name and address of the contractor, subcontractor, grantee, Department of Defense activity or other organization *(corporate author)* issuing the report.

2a. REPORT SECURITY CLASSIFICATION: Enter the overall security classification of the report. Indicate whether "Restricted Data" is included. Marking is to be in accordance with appropriate security regulations.

2b. GROUP: Automatic downgrading is specified in DoD Directive 5200.10 and Armed Forces Industrial Manual. Enter the group number. Also, when applicable, show that optional markings have been used for Group 3 and Group 4 as authorized.

3. REPORT TITLE: Enter the complete report title in all capital letters. Titles in all cases should be unclassified. If a meaningful title cannot be selected without classification, show title classification in all capitals in parenthesis immediately following the title.

4. DESCRIPTIVE NOTES: If appropriate, enter the type of report, e.g., interim, progress, summary, annual, or final. Give the inclusive dates when a specific reporting period is covered.

5. AUTHOR(S): Enter the name(s) of author(s) as shown on or in the report. Enter last name, first name, middle initial. If military, show rank and branch of service. The name of the principal author is an absolute minimum requirement.

6. REPORT DATE: Enter the date of the report as day, month, year; or month, year. If more than one date appears on the report, use date of publication.

7a. TOTAL NUMBER OF PAGES: The total page count should follow normal pagination procedures, i.e., enter the number of pages containing information.

7b. NUMBER OF REFERENCES: Enter the total number of references cited in the report.

8a. CONTRACT OR GRANT NUMBER: If appropriate, enter the applicable number of the contract or grant under which the report was written.

8b, 8c, & 8d. PROJECT NUMBER: Enter the appropriate military department identification, such as project number, subproject number, system numbers, task number, etc.

9a. ORIGINATOR'S REPORT NUMBER(S): Enter the official report number by which the document will be identified and controlled by the originating activity. This number must be unique to this report.

9b. OTHER REPORT NUMBER(S): If the report has been assigned any other report numbers *(either by the originator or by the sponsor)*, also enter this number(s).

10. AVAILABILITY/LIMITATION NOTICES: Enter any limitations on further dissemination of the report, other than those imposed by security classification, using standard statements such as:

(1) "Qualified requesters may obtain copies of this report from DDC."

(2) "Foreign announcement and dissemination of this report by DDC is not authorized."

(3) "U. S. Government agencies may obtain copies of this report directly from DDC. Other qualified DDC users shall request through _____."

(4) "U. S. military agencies may obtain copies of this report directly from DDC. Other qualified users shall request through _____."

(5) "All distribution of this report is controlled. Qualified DDC users shall request through _____."

If the report has been furnished to the Office of Technical Services, Department of Commerce, for sale to the public, indicate this fact and enter the price, if known.

11. SUPPLEMENTARY NOTES: Use for additional explanatory notes.

12. SPONSORING MILITARY ACTIVITY: Enter the name of the departmental project office or laboratory sponsoring *(paying for)* the research and development. Include address.

13. ABSTRACT: Enter an abstract giving a brief and factual summary of the document indicative of the report, even though it may also appear elsewhere in the body of the technical report. If additional space is required, a continuation sheet shall be attached.

It is highly desirable that the abstract of classified reports be unclassified. Each paragraph of the abstract shall end with an indication of the military security classification of the information in the paragraph, represented as *(TS), (S), (C), or (U)*.

There is no limitation on the length of the abstract. However, the suggested length is from 150 to 225 words.

14. KEY WORDS: Key words are technically meaningful terms or short phrases that characterize a report and may be used as index entries for cataloging the report. Key words must be selected so that no security classification is required. Identifiers, such as equipment model designation, trade name, military project code name, geographic location, may be used as key words but will be followed by an indication of technical context. The assignment of links, roles, and weights is optional.