N R L REPORT NO. E-3295

DEVELOPMENT OF A SHOCK RESISTANT INDICATOR LIGHT

J. D. Haynsworth

APPROVED FOR PUBLIC
RELEASE - DISTRIBUTION
UNLIMITED

June 9, 1948

Approved by:

Mr. W. B. Roberts, Head, Interior Communications Section
Dr. Wayne C. Hall, Superintendent, Electricity Division

NAVAL RESEARCH LABORATORY
CAPTAIN H. A. SCHADE, USN, DIRECTOR
WASHINGTON, D.C.

DISTRIBUTION

BuShips	
Attn: Code 330	(5)
Attn: Code 345	(2)
Attn: Code 660	(2)
Attn: Code 665	(2)
BuOrd	
Attn: Code REC 3	(2)
BuAer	
Attn: Code TD-4	(2)
ONR	
Attn: Code N-482	(2)
Dir., USNEL	(2)
CO, NOTS	
Attn: Reports Unit	(2)
Dir., USNEES	(2)
OCSigO	
Attn: Ch. Eng. & Tech. Div., SIGTM-S	(1)
CO, SCEL	
Attn: Dir. of Engineering	(2)
RDB	
Attn: Library	(2)
Attn: Navy Secretary	(1)
Science and Technology Project	
Attn: Mr. J. H. Heald	(2)

CONTENTS

Abstract	iv
Problem Status	iv
Authorization	iv
INTRODUCTION	1
RESULTS OF THE INVESTIGATION	3
CONCLUSIONS	3
ACKNOWLEDGMENTS	4

ABSTRACT

This problem involves the development of a shock-resistant 120-volt switchboard indicator light by the Laboratory. The light which has been developed consists of a resiliently mounted fixture and a special lamp with multiple-filament supports. It is resistant to high-impact shock such as may result from battle conditions. It is applicable directly to 120-volt circuits and, with an 18-watt series resistor, to 440-volt circuits. Where space permits it can be used to replace the present 6-volt Navy standard switchboard light with a minimum of switchboard modification.

PROBLEM STATUS

This is a final report on NRL Problem E02-12. Unless the Laboratory is otherwise advised by the Bureau this problem will be closed one month from the mailing date of this report.

AUTHORIZATION

NRL Problem No. E02-12 (BuShips Problem No. IC 1063).

DEVELOPMENT OF A SHOCK RESISTANT INDICATOR LIGHT

INTRODUCTION

Aboard naval vessels colored indicator lights are used extensively to show vital information such as power availability, equipment condition, battle information, etc. It is essential that these indicators be dependable under severe battle conditions. It is also desirable that they be of a simple design requiring no auxiliary accessories.

The Bureau letter requesting this development called for improvement in several types of indicators. On or about 1 August 1945, Bureau representatives modified orally the request to apply to switchboard indicators only.

The present switchboard indicator light 9-S-5040 Alt 12 (Figure 1 and No. 1 of Figure 2) is not shock resistant and requires a transformer to supply the 6-volt lamp.

Samples of this light and its socket were mounted on a 1/8-inch meter panel of a lightweight shock machine (Figure 6D of Navy Department Specification 66S3) and each group of fixtures was given two 5-foot blows either in line with the axis of the lamp or at right angles to the axis. The lamps averaged eight failures for each group of 16. These results were considered unsatisfactory since present requirements for RSHI (Rough Service High Impact) lamps permit not more than four failures for each group of 16 lamps under like tests.

From information contained in reports of previous lamp investigations, and from oral discussions with representatives of the lamp manufacturers, it was concluded that the desired shock resistance of 120 volt-indicator lights could most readily be achieved by a combination of a resiliently mounted fixture and a shock-resistant lamp. Two lamp manufacturers undertook to develop shock-resistant 6-watt 120-volt lamps with multiple filament supports, as suggested by the Laboratory, while the Laboratory developed a shock-mounted fixture.

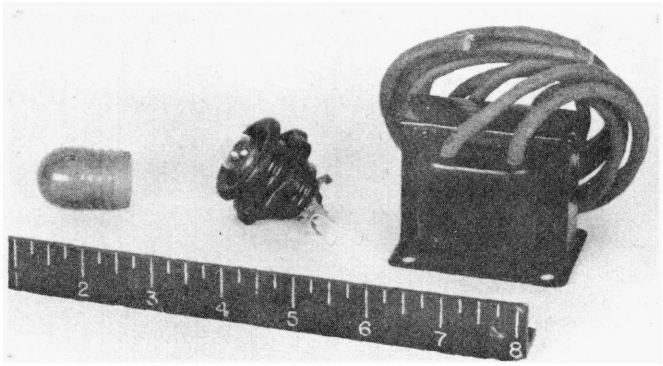

Figure 1. Switchboard indicator light 9-S-5040-Alt 12

Subsequently the Laboratory developed and tested several types of shock-mounted fixtures. A preliminary model is shown as No. 2 in Figure 2 and the design which

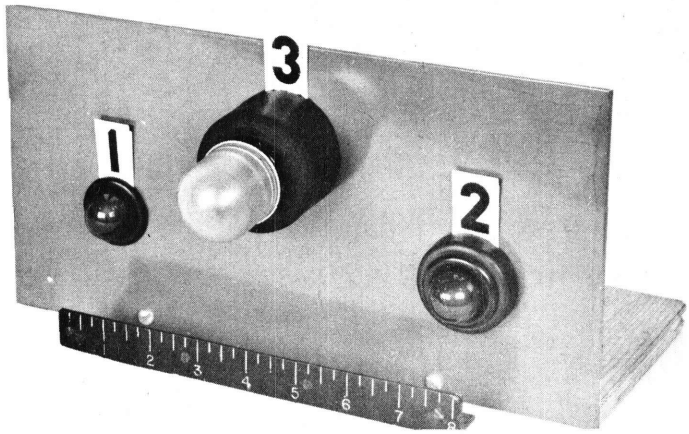

Figure 2. No. 1-indicator light 9-S-5040-Alt 12, No. 2-NRL preliminary model of indicator light, No. 3-NRL final model of shock-resistant indicator light

gave the greatest protection to the lamps is shown as No. 3. The latter design consists of a resilient molded-composition base which is attached to the switchboard panel by means of a threaded tube similar to that of the present standard indicator light. An intermediate socket and a threaded ring for securing the colored globe are fixed to the base. The dimensions of the base are shown in Figure 3, and a photograph of a cross section appears in Figure 4. This base is molded of a nonaging heat- and oil-resistant composition similar to Class I, Bureau of Ships Specification 33R9, except as follows:

EXCEPTIONS

GRMIO	100
Stearic Acid	0.5
Neophax	25
Accelerator 552	0.1
XX Magnesia Oxide	4
Thermax	20
Zinc Oxide	5
Neozone	2
Light Process Oil	75
Cure 30 min at 300° F.	
Minimum Tensile Strength	1500 psi
Elongation	500%
Compression Set	50%
Shore Hardness	35 to 45

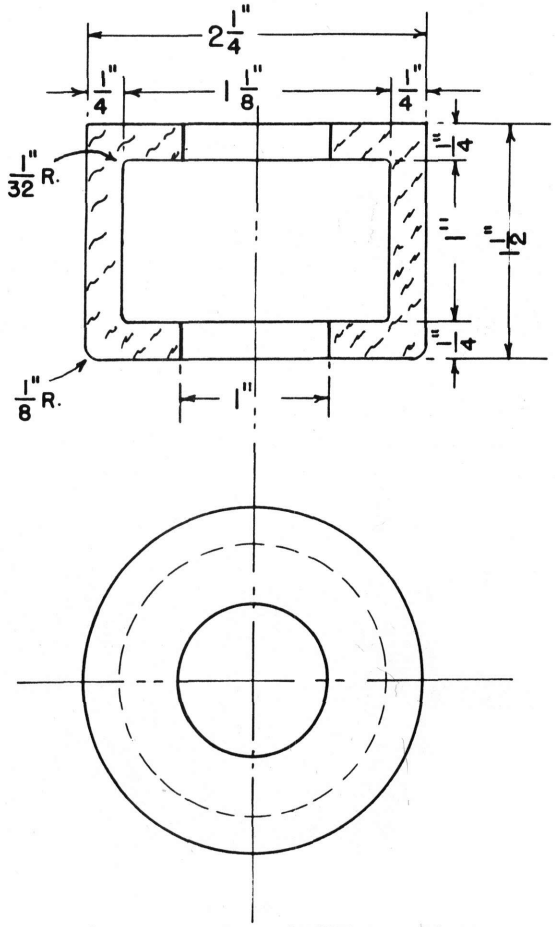

Figure 3. Dimension of NRL resilient mount

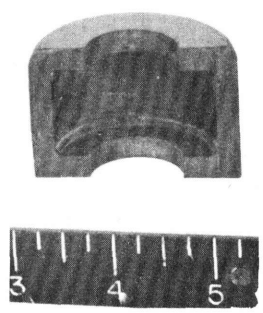

Figure 4. Section of resilient composition mount

This resilient base afforded the best lamp protection when the combined weight of the lamp socket, threaded ring, and globe was approximately 2-1/2 ounces.

RESULTS OF THE INVESTIGATION

The lamp manufacturers produced several experimental lamps incorporating Laboratory suggestions. High-speed photographs of preliminary samples showed that failures were due to swinging, touching, and shorting of the filaments. Additional supports were added to final samples.

Of the lamps submitted, the Champion experimental-type C-5 was considered the best. This lamp is shown in Figure 5. It is rated 6 watts at 120 volts and has 13 filament supports, plus the lead-in wires. This lamp is 2-1/8 inches long, has a bulb 7/8 inch in diameter, and has an intermediate base.

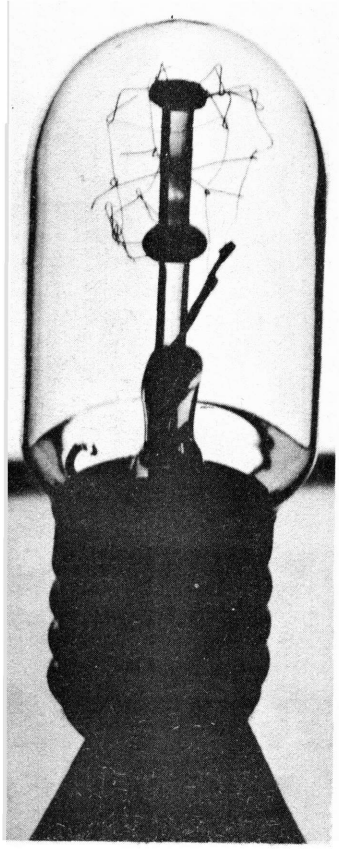

Figure 5. Champion shock-resistant 6-watt, 120-volt lamp

The Laboratory fixture with Champion Lamp was mounted on the standard switchboard instrument panel of the lightweight shock machine and given nine blows. Blows with hammer drop heights of 1 foot, 3 feet, and 5 feet were applied to each of the three principal axes while the lamps were burning at rated voltage.

Seven lamps were so tested. With one exception all were burning at the end of the nine blows. Four of the surviving lamps showed indications of shorts. All six surviving lamps without fixture were vibrated at approximately 30 cps with a total excursion of 0.1 inch while burning at 120 volts. All were burning at the end of 48 hours.

The 6-watt 120-volt lamp which was considered second best, when tested under similar conditions, had four failures for 12 lamps tested. These lamps had ten filament supports.

Fourteen of the present standard indicator lights with 6-volt lamps (Mazda No. 55) were shock tested in the same manner. Ten of these fourteen failed. As compared with the NRL fixture and Champion C-5 lamps this was five times as many failures.

The NRL fixture with Champion lamps was vibrated at varying frequencies of from 5 to 23 cps at 0.06 inch total excursion and from 23 to 50 cps at 0.014 inch total escursion. No resonant frequencies of the fixture were observed during this test.

A suggested production design incorporating the desirable features of the Laboratory model is shown in Figure 6.

CONCLUSIONS

(A) The indicator light consisting of Laboratory fixture and Champion C-5 lamp can be classified as HI (High Impact) shock resistant.

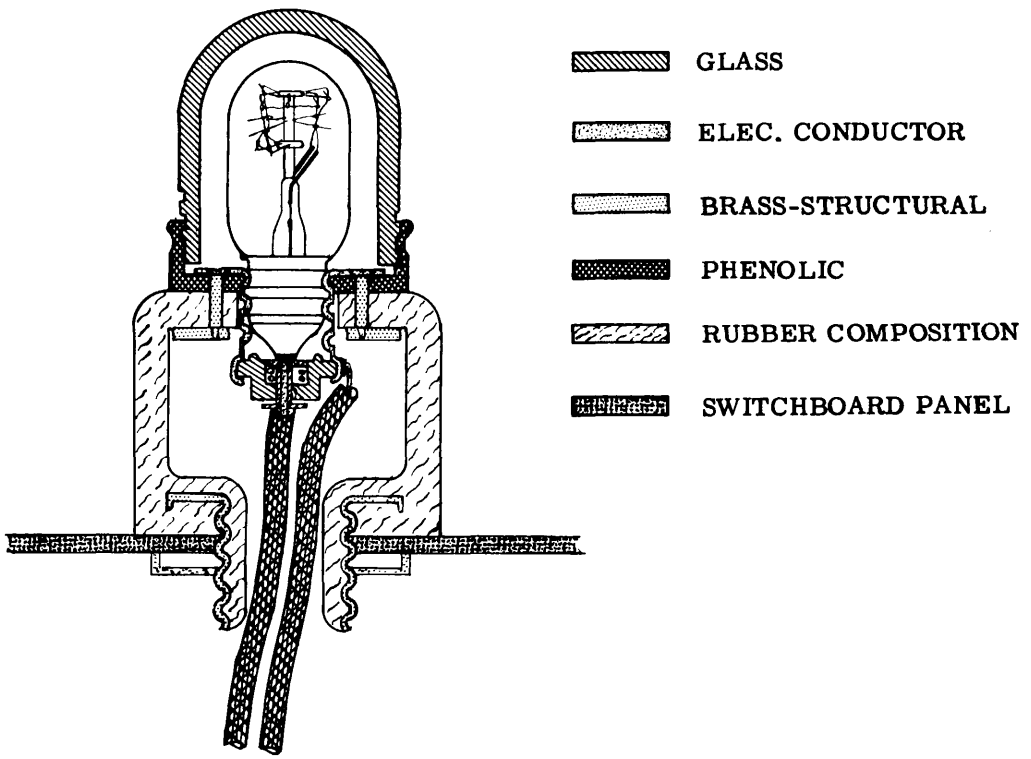

Figure 6. Suggested production design for NRL shock-resistant indicator light

(B) This indicator light can be used in 120-volt circuits without transformers or resistors.

(C) It is applicable to 440-volt circuits with an 18-watt series resistor, provided the electrical clearances of the lamp and of the socket are acceptable to the Bureau of Ships for shipboard use.

(D) In order to permit free movement of the resilient mounting, the indicators should be installed so that their centers are not less than 2-3/4 inches apart.

(E) Since the mounting details are similar, the Laboratory fixture can be used, where space permits, to replace the present indicator lights with little or no modifications to the panels or switchboards.

ACKNOWLEDGMENT

The assistance of Mr. Ralph C. Taylor in developing a suitable composition for the resilient base for the indicator light is deeply appreciated.

* * *

PRNC -7000-8-25-48-100