NRL Report 6497

Power Circuits for Optimum Stepped-Wave Output in Three-Phase Single-Way Static Inverters

J. P. O'Connor

Energy Conversion Branch
Electronics Division

March 6, 1967

NAVAL RESEARCH LABORATORY
Washington, D.C.

DISTRIBUTION OF THIS DOCUMENT IS UNLIMITED

CONTENTS

Abstract ii
Problem Status ii
Authorization ii

INTRODUCTION 1

OPTIMUM OUTPUT WAVEFORMS USING MULTIPLE OR INTER-CONNECTED PRIMARY TRANSFORMER CONNECTIONS 2

FOURIER ANALYSIS OF STEPPED WAVEFORMS 12

OPTIMUM-OUTPUT WAVEFORM USING INTERCONNECTION OF MULTIPLE SECONDARY WINDINGS 16

CONCLUSIONS 22

REFERENCES 23

ABSTRACT

In the three-phase, single-way inverters considered, the stepped-wave approach offers the great advantage of an output waveform that approaches that of a sinusoid. The single-way type inverter is advantageous where the input dc voltage is low, since in this type of inverter the voltage drop in only one switch need be considered.

Fourier analysis of a stepped-wave output shows that if the center of each step lies on a sinusoid, the lowest harmonic present is one less than the number of steps in the waveform.

Various circuit configurations using single-phase and three-phase cores, which involve interconnection of multiple primary transformer windings, are considered for producing stepped waves with minimum harmonic content. These types of circuit configurations result in poor switch and copper utilization, and have limited power capability.

Circuit configurations where interconnection of multiple secondary transformer windings are used result in good copper and switch utilization, and the power capability increases as the number of steps (or switches) is increased.

If in a multiswitch three-phase inverter one half the total number of switches are considered as one input system and the other half as a second input system, voltage regulation may be obtained by varying the phase relation between the two input systems.

For three-phase power applications where the input dc voltage is low, inverter-circuit configurations using interconnection of multiple secondary transformer windings appears attractive. The limiting factor is the current-carrying capacity of the solid-state switches, but where greater power capability is required more switches may be added, with a resultant improvement in output waveform and therefore lower filtering requirements. Some savings in transformer magnetic material can be achieved by the use of a multiple-windowed transformer core, in contrast to the use of separate cores for each pair of power switches used. There is, then, the difficulty in the fabrication of the multiple-windowed core in addition to winding problems over and above that encountered in using the readily available single cores.

PROBLEM STATUS

This is an interim report on one phase of the problem; work is continuing on the problem.

AUTHORIZATION

NRL Problem E01-05
Project RR 008-03-46-5675

Manuscript submitted October 11, 1966.

POWER CIRCUITS FOR OPTIMUM STEPPED-WAVE OUTPUT IN THREE-PHASE SINGLE-WAY STATIC INVERTERS

INTRODUCTION

The stepped-wave approach in the design of multiphase static inverters offers the great advantage of an output waveform that approaches that of a sinusoid. This waveform results in a considerable reduction in filtering requirements. It should be understood that static solid-state devices handle maximum power with minimum losses when operating as switches. Operation in this mode from a dc power source results in a square-wave or quasi square-wave output. On the other hand, most ac loads require a sinusoidal input for optimum performance. The stepped-wave inverter is an attempt to resolve these conflicting requirements by permitting the static devices to operate in the switching mode and by furnishing a stepped output waveform which approaches a sinusoid as the number of steps is increased.

Methods to achieve optimum-output stepped waveforms (waveforms with minimum harmonic content) by interconnection of the secondary windings on transformers have been described in the literature for both single-way (1-4) and double-way (5) inverter circuits. In this study, consideration is also given to interconnections of primary transformer windings to produce optimization of the output waveform. It is shown that for all types of stepped waveforms the waveform is optimum when the center of each step of the output voltage waveform lies on a sinusoid.

In general, the number of steps in the optimum waveform for three-phase inverters is limited to multiples of six, or more generally two steps per phase. In multiphase inverters the number of steps in the optimum-output waveform is equal to the number of switches in the input.

In inverters where harmonic cancellation is achieved by interconnection of the secondary transformer windings, 180-degree conduction in the switches results in maximum switch and copper utilization. In inverters (6-8) where harmonic cancellation is achieved by interconnection of primary transformer windings or by multiple primary transformer windings, conduction in the switches is limited to 60 degrees or 120 degrees, which results in decreased switch utilization. However, by the use of an interphase transformer (9,10) it is possible to obtain 180-degree conduction in the switches and thus improve switch utilization. The rule for the generation of stepped waves in three-phase inverters requires that the algebraic sum of the induced voltages in the secondary windings be zero at each step. If the waveform is to be optimum, then it is a further requirement that the center of each step lie on a sinusoid.

The method of commutation and provision for handling reactive loads is perhaps the most difficult problem in the design of an inverter, but here for the sake of simplicity all commutating circuits have been omitted. For the same reason, discussion and diagrams of equipment for operation of the switches in proper sequence and for phase displacement where voltage regulation is required have also been omitted. These essential functions and various methods of achieving them have been described in the literature and in the references cited, and if presented here might unnecessarily lead to confusion.

A common objection directed at solid-state static inverters is the use of a multiplicity of components and the resulting complexity of circuits. In this report the emphasis

is intended to show the relative simplicity of the power circuits and the few basic components required. The essential need for commutation and switching operation adds components and additional circuits. Where the input dc voltage varies over a wide range and precision power output is required, the complexity and multiplicity of components must increase over that of the basic power circuits. Short-circuit protection and operation over a wide range of loading conditions at varying power factors will add further to the number of components and complexity. In brief, inverters can be expected to vary in size, cost, weight, and complexity, depending on the power source and the requirements of the load. In any particular application, adequate specifications must consider the dc supply source and the load requirements, and the specifications in turn determine to a great extent the complexity or simplicity of the inverter for that particular application. In this respect the rotary inverter appears to have greater versatility, in that a given design can be more easily adapted to different requirements. However, because of potential lighter weight, negligible maintenance, long life, and a continuing decrease in cost and improvement in performance of static switching devices, inverters based on these devices are assured of a dominant position in the field.

OPTIMUM OUTPUT WAVEFORMS USING MULTIPLE OR INTERCONNECTED PRIMARY TRANSFORMER CONNECTIONS

In Fig. 1, a and b are two representations of three single-phase transformers with associated switches. This circuit, with suitable filtering, constitutes a three-phase static inverter. If silicon-controlled rectifiers (SCRs) are used as switches, three suitable capacitors, one connected across each primary winding, or the three capacitors connected in delta across the secondary windings, would serve the dual purpose of

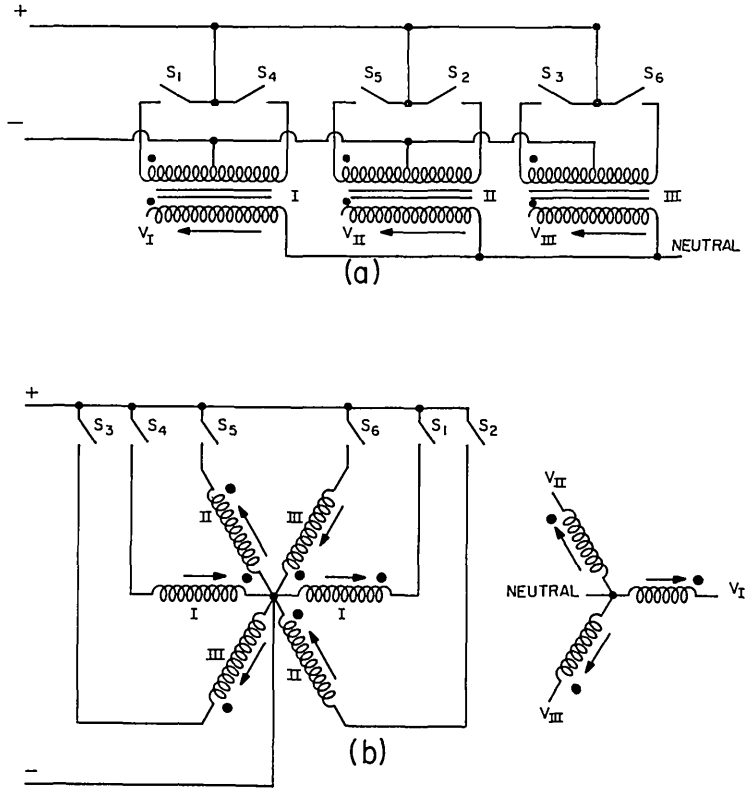

Fig. 1 - Two representations of the power circuit for a six-step, single-way, three-phase inverter

filtering and commutation. In addition, a choke in the dc input is normally required. Although commutation (the reduction of current to zero during switching) is of equal importance as the power circuits in an inverter, it will simplify presentation if circuits for commutation and filtering, in addition to that for sequential operation of the switches, are omitted.

In a single-way circuit, the input current travels in one direction in each half of a center-tapped winding, as in Fig. 1. This action is in contrast to a double-way winding, where the current travels through the entire winding, first in one direction, then in the opposite direction, as in a bridge circuit. The circuit shown in Fig. 1 can be used as a double-way circuit by doubling the number of switches and using the switching arrangement shown in Fig. 2. It will be noted that the input current must go through two switches at each step. The double-way circuit gives better copper utilization and is most suitable for high-input dc voltage. Here the emphasis is restricted to single-way, three-phase circuits, suitable for low-input dc voltage.

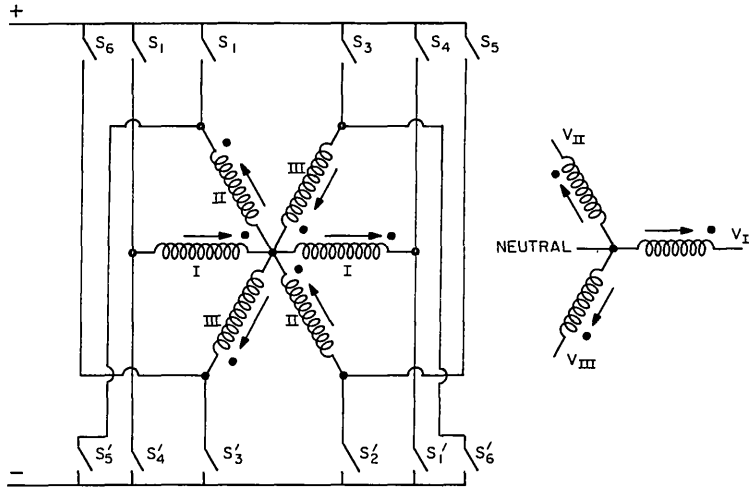

Fig. 2 - Power circuit for a six-step, double-way, three-phase inverter

In Fig. 1, subscript numbers on switches indicate the order in which they are turned on. In all switching arrangements considered, it will be assumed that each switch is on for the same time interval. One "cycle" is the required time from the turning on of one switch (say S_1) until that switch is again turned on. On the output waveform this cycle is the equivalent of 2π radians (360 degrees), or one electrical cycle. It is convenient to express the on time of each switch or conduction period also in degrees. Hence the on time in degrees, divided by 360 degrees (one cycle), represents the fraction of one cycle that a switch is on. If in Fig. 1 all switches are turned on in sequence and only one switch is on at a time, then each switch has a conduction period of 60 degrees.

When using transistors or SCRs, a ring counter or similar electronic device provides a relatively simple method of insuring the turning on of each switch at equal time intervals. With SCRs, the on time interval is determined by the commutation and with transistors is controlled by the forward "biasing" time intervals.

In Fig. 1 it is assumed that only one switch is on at any time (60-degree conduction). Arrows indicate the direction of induced voltage in the primary and secondary windings

when the odd-numbered switches are in the on position. It can be seen that the direction of induced voltage reverses when an even-numbered switch is on. Hence, if the output voltage is considered positive in the secondary winding associated with S_1, it will be equal and opposite when switch S_4 is on.

Figure 3 shows the induced voltages when the switches are turned on in sequence, for a 60-degree conduction period. That is, each switch is on for one-sixth of a cycle (360 degrees), or 60 degrees, and therefore only one switch is on at a time. All three wave shapes are similar, as they must be if the ratio of the number of turns on primary and secondary windings of each phase (or transformer) is the same. The positive and negative loops in each wave must be identical if the center tap is indeed a center tap. The rectangular waveshape assumes ideal switching, and for solid-state devices this is reasonable if the switching time (time from fully off to on) is relatively short compared to the on interval. The switching time of solid-state devices is of the order of 10 to 20 microseconds, so that for most practical inverters considered here, where the maximum frequency would be 400 cps, the turn-on and turn-off times are short enough that instantaneous switching can be assumed. Hence the wave shapes in Fig. 3 are assumed to be rectangular and to have equal positive and negative loops. For rectangular waveshapes of equal negative and positive loops, it can be shown that all even harmonics are zero. This is also true for symmetrical stepped waveforms.

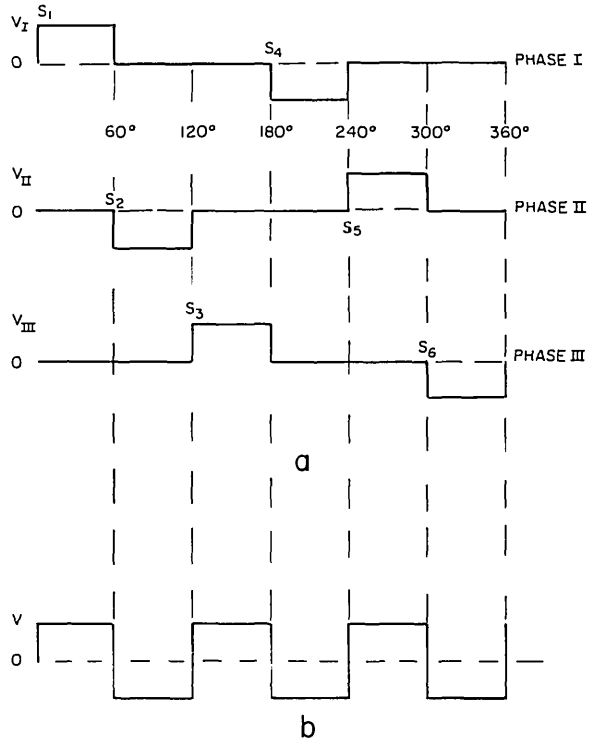

Fig. 3 - Phase voltages and their summation; (a) phase voltages for circuit of Fig. 1, 60-degree conduction in switches, (b) voltage when secondary windings are connected in delta

If the secondary windings (Fig. 1) are connected in delta, a circulating current of triple frequency will flow. This can be confirmed by adding the phase voltages of Fig. 3a, resulting in a square waveform of triple frequency, as shown in Fig. 3b. It can be shown that the voltage causing the alternating-current flow in the delta is caused by the sum of

the third-harmonic voltages and all odd multiples of this voltage that are found in the phase voltages. It can be concluded that when the algebraic sum of the phase voltages is at all times equal to zero, no circulating current will flow in a delta connection, and conversely, if there is to be no circulating current in a delta connection the phase voltages must have no third harmonic or odd multiple of this harmonic. Even if the output windings are of a three-phase system not connected in delta that contains third harmonics in the phase voltages, then the third-harmonic voltage will cause a circulating current in a delta-connected load. If the load is a motor, no power output is obtained from the third-harmonic voltages, which just dissipate their power as added heat losses in the motor windings and thus cause the motor to overheat. For this and other reasons, the quality of ac voltage is enhanced as the harmonic content is decreased.

In a three-phase transformer using a three-phase core with sinusoidal three-phase voltage excitation, and assuming that operation is on the linear part of the saturation curve, it is found that the algebraic sum of the primary voltages is equal to zero; also, the algebraic sum of the flux and flux change in the core is equal to zero. Therefore the algebraic sum of the induced voltages of the secondary windings (assumed to have an equal number of turns) is also zero. Hence, in the inverter, where a three-phase core is used, if the algebraic sum of the fluxes (or flux change) in the three legs can be maintained equal to zero, then the sum of the induced voltages in the secondary windings will be equal to zero.

It will be seen that if any one leg of a three-phase transformer is energized by a dc voltage for a time short enough to prevent the core reaching saturation, the sum of the fluxes and flux change is equal to zero, since the flux and flux change in the excited leg is equal and opposite to the sum of the fluxes (and flux change) in the other two legs. It will also be seen that if any two legs are excited in opposite directions (that is, so that the fluxes are in opposite directions), then the sum of the fluxes and the flux change in the three legs are equal to zero, the flux in the unexcited leg remaining zero because of the equal and opposite mmfs. Hence we conclude that if a three-phase core is used with the circuit shown in Fig. 1, phase voltages will be produced in the output winding free of third harmonics for the conditions of one or two switches on at a time, that is for 60-degree conduction, or 120-degree conduction. Three switches on at a time, or 180-degree conduction, is not possible with a three-phase core. It is possible to excite simultaneously all three legs of a three-phase transformer core from a common voltage and maintain the total flux and flux change equal to zero if the applied excitation on any leg is equal and opposite to the sum of the excitations on the other two legs. This may be accomplished in several ways, when only a single source of dc is available. In any case the sum of the mmfs on two legs must be equal and opposite to the mmf on a third leg. One method is to connect the windings of all three legs in series with an appropriate number of turns per leg, and a second method is to parallel the sum of the turns on two legs with that of the turns on the third, so that the ampere turns in each parallel circuit are equal and opposite.

The circuit required using a three-phase core to produce a three-phase output, having no third harmonic and conforming to the necessary flux relations (for 60-degree conduction), discussed above, is shown in Fig. 1, and the output phase voltages are shown in Fig. 4. It will be observed that the instantaneous sum of all three-phase voltages is equal to zero; hence the phase voltage, as can be shown by Fourier analysis, contains no third harmonic or odd multiple of this harmonic, and since from symmetry considerations there are no even harmonics, the first harmonic to occur is the fifth.

As we have seen, the circuit of Fig. 1 produces an optimum (without third harmonic) output waveform when used with a three-phase core, but not when using three single-phase cores. That this would happen could be predicted from the criterion that the sum of the fluxes must equal zero if the output voltages are to be optimum. So far, only 60-degree conduction has been considered; if now the flux criterion is used for the circuit

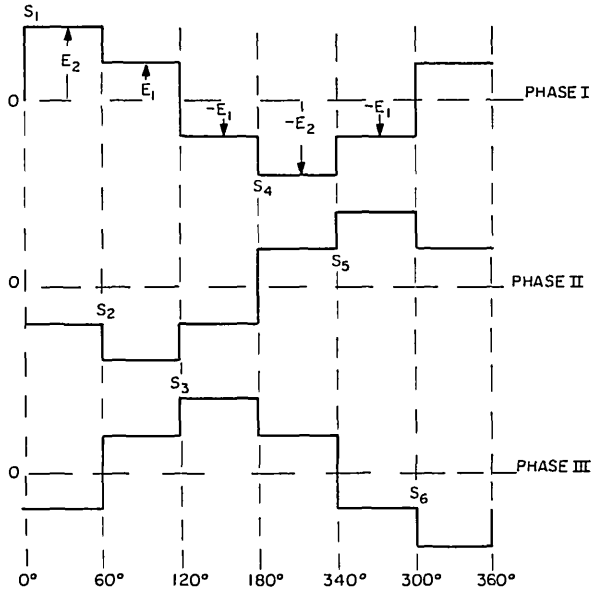

Fig. 4 - Phase voltages for circuit of Fig. 1 or Fig. 2, when a three-phase core is used; 60-degree conduction in each switch

of Fig. 1 for 120-degree conduction (with either a three-phase core or with three single-phase cores), it can be predicted that the output voltage waveforms should be optimum in either case. The output phase voltages for 120-degree conduction are shown in Fig. 5. If the circuit shown in Fig. 6 is used with either a three-phase core or three single-phase cores with 60-degree conduction in the switches, then the output voltage will be as shown in Fig. 4.

Figure 7a and b shows a delta-connected winding on a three-phase core. When S_1 is closed, currents i_1 and i_2 flow in the directions indicated in Fig. 7a. Figure 7b shows the flux in each leg when the effect of i_1 only is considered. The mmf on leg I is Ni_1 (where N is the number of turns on leg I), and this gives rise to a flux ϕ_1, which is assumed to be directed upward in this leg. One-half this flux, $\phi/2$, returns through each of the other two legs and is directed downward. Leakage flux is neglected, and the reluctance of each return path is assumed to be the same. Normally in the conventional split three-phase core the reluctance is mainly in the air gaps, and the leakage flux is negligible. If R_g is the reluctance of the air gap in each leg, then the total reluctance to ϕ_1 is the reluctance of the air gap in leg I plus the reluctances of the air gaps of legs II and III in parallel, so that the total reluctance, $R_t = 1.5\,R_g$. The equation

$$\phi_1 = \frac{N_1 i_1}{R_t} \tag{1}$$

relates the flux to the mmf and the reluctance. Since R_t and N are constant in a given transformer, the rate of change of flux is proportional to the rate of change of current, if operation is maintained on the linear part of the saturation curve. In power transformers, because of a decrease in efficiency and an increase in harmonic content it is not feasible to operate on the nonlinear part of the saturation curve. Hence, here as in normal transformer operation, linearity is assumed, and the principle of superposition can

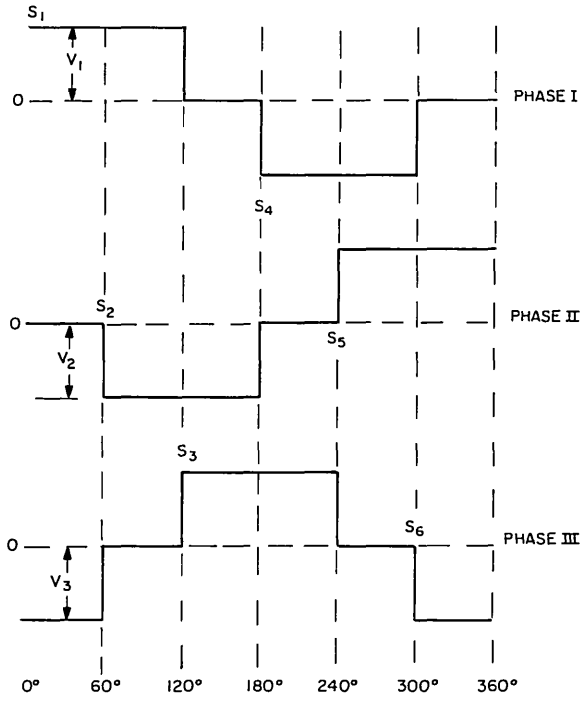

Fig. 5 - Phase voltages for circuit of Fig. 1, using a three-phase core or three single-phase cores; 120-degree conduction in each switch

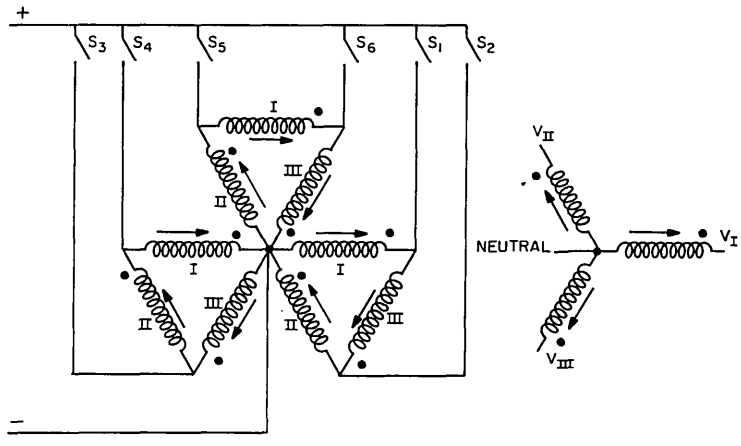

Fig. 6 - Circuit producing the output waveform shown in Fig. 4, using three-phase or three single-phase cores; 60-degree conduction in switches

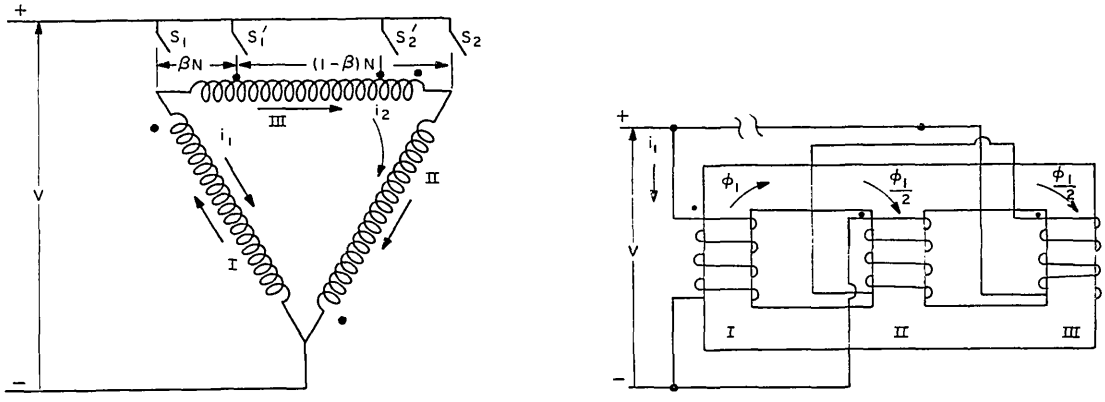

(a) Three-phase core

(b) Three-phase core, showing flux when i_1, only, is flowing

Fig. 7 - Delta-connected winding

be applied. Taking the derivative of each side of Eq. (1), the following equation for the rate of change of flux is obtained:

$$\frac{d\phi_1}{dt} = C\frac{di_1}{dt} \tag{2}$$

where C now represents N_1/R_t.

If superposition is applied, and the mmf on each leg and the flux it produces are considered separately as for leg I (see Fig. 7b), it will be seen that the total flux and total rate of change of flux when both i_1 and i_2 are flowing must equal zero. To illustrate for the condition when S_1 is closed, the flux produced in each leg by each of the three mmf's (one on each leg) is shown in tabular form below. Note that the mmf applied to each leg can be arbitrary, yet the sum of the resultant fluxes (and flux changes) will always equal zero (Table 1).

Table 1
Component and Resultant Fluxes in a Three Phase Core

MMF	Component Fluxes		
	Leg I	Leg II	Leg III
Leg I: $N_1 i_1$	ϕ_1	$-\phi_1/2$	$-\phi_1/2$
Leg II: $-N_2 i_2$	$\phi_2/2$	$-\phi_2$	$\phi_2/2$
Leg III: $-N_3 i_3$	$\phi_3/2$	$\phi_3/2$	$-\phi_3$
Resultant Fluxes:	$\phi_1 + \phi_2/2 + \phi_3/2$	$-\phi_2 - \phi_1/2 + \phi_3/2$	$-\phi_3 - \phi_1/2 + \phi_2/2$

If ϕ_{I}, ϕ_{II}, and ϕ_{III} represent the resultant flux in each leg, it will be observed that the flux in each leg is composed of three components; each component results from and is proportional to the applied mmf, account being taken of the direction or sign of the mmf. Here negative signs indicate a flux directed downward. It will be noted that there is some

"flux cancellation" in legs II and III. The resultant fluxes in legs II and III are actually the return paths of the resultant flux in leg I. Returning to Fig. 7a, and assuming S_1 closed, a current (i_2) will then flow in the windings of legs II and III which is in parallel with the winding on leg I. If the applied voltage is V, two voltage equations (one for each parallel path) may be formulated:

$$V = i_1 N_1 r_1 + N_1 \frac{d\phi_{\mathrm{I}}}{dt} \tag{3}$$

$$V = i_2 N_2 r_2 + i_3 N_3 r_3 + N_2 \frac{d\phi_{\mathrm{II}}}{dt} + N_3 \frac{d\phi_{\mathrm{III}}}{dt} \tag{4}$$

where i_1, N_1, r_1, and ϕ_{I} are the current, number of turns, resistance per turn, and flux for leg I and the same symbols with subscripts 2 and 3 represent the same parameters for legs II and III, respectively. However, since winding II is in series with winding III, $i_2 = i_3$, and since the number of turns on each leg and the wire size are the same, the two voltage equations can be written as follows:

$$V = N \left(i_1 r + \frac{d\phi_{\mathrm{I}}}{dt} \right) \tag{3a}$$

$$V = 2N \left(i_2 r + \frac{d\phi_{\mathrm{II}}}{dt} \right) . \tag{4a}$$

From the flux tabulation, Table 1, it will be observed that $\phi_{\mathrm{II}} = \phi_{\mathrm{III}}$ when $N_2 i_2 = N_3 i_3$, and that $\phi_{\mathrm{I}} = 2\phi_{\mathrm{II}}$; hence, making these substitutions in the above equations, it is found that $i_1 = 2i_2$. This result indicates that the current in each parallel path varies inversely as the resistance of the paths or inversely as the number of turns. The ratio of the fluxes in legs I and II is the same as the ratio of the currents in each of the windings on these legs. That this is true for any arbitrary tapped position of S_1 on the winding of leg III will now be shown.

In Fig. 7a, assume that switch S_1 is tapped an arbitrary number of turns, βN, to the right of its initial position. Call the new position of S_1, S_1'. Assuming that S_1' is closed, currents i_1 and i_2 will flow. Current i_1 now flows through βN turns of winding III in addition to all of winding I, and current i_2 now flows through $(1-\beta)N$ turns of winding III in addition to all of winding II. Using the principle of superposition, the resultant flux in each leg can be found in terms of mmf (Eq. (1)), also if the ratio i_2/i_1 is made equal to α. Table 2 shows the resultant fluxes. Actually the resultant fluxes found in the three legs are not independent. There is just one flux, represented by the expression for the resultant flux in leg I; the other two resultant fluxes in legs II and III represent the two components of the return flux. The negative signs indicate that the direction of the flux is opposite to that in leg I.

Substituting the ratio i_2/i_1 for α in the expression for the resultant flux in leg I, the expression for ϕ_{I} is as follows:

$$\phi_{\mathrm{I}} = (2-\beta) \frac{N}{2R} i . \tag{5}$$

The expressions for the two return components of this flux in legs I and II, respectively, are:

$$\phi_{\mathrm{II}} = (\beta + 1) \frac{N}{2R} i \tag{6}$$

Table 2
Component and Resultant Fluxes for Circuit Shown in Fig. 7a (S_1' Closed)

MMF	Component Fluxes		
	Leg I	Leg II	Leg III
Leg I: Ni_1	$\frac{Ni_1}{R_t}$	$-\frac{Ni_1}{2R_t}$	$-\frac{Ni_1}{2R_t}$
Leg II: $-\alpha Ni_1$	$\frac{\alpha Ni_1}{2R_t}$	$-\frac{\alpha Ni_1}{R_t}$	$\frac{\alpha Ni_1}{2R_t}$
Leg III: $-[\alpha(1-\beta)-\beta]\,Ni_1$	$[\alpha(1-\beta)-\beta]\,\frac{Ni_1}{2R_t}$	$[\alpha(1-\beta)-\beta]\,\frac{Ni_1}{2R_t}$	$-[\alpha(1-\beta)-\beta]\,\frac{Ni_1}{R_t}$
Resultant Fluxes	$(2-\beta)(\alpha+1)\,\frac{Ni_1}{2R_t}$	$-(1+\beta)(\alpha+1)\,\frac{Ni_1}{2R_t}$	$-(1-2\beta)(\alpha+1)\,\frac{Ni_1}{2R_t}$

$$\phi_{III} = (1-2\beta)\,\frac{N}{2R}\,i\,. \tag{7}$$

In the above expressions $i = i_1 + i_2$. The ratio of the flux and flux change in leg II to that in leg I is:

$$\frac{\phi_{II}}{\phi_I} = \frac{\beta+1}{2-\beta}\,. \tag{8}$$

It will now be shown that this ratio is equal to α, or the ratio of the currents in the windings of these legs.

The voltage equations for each parallel path are:

$$V = (1+\beta)Nri_1 + N\frac{d\phi_I}{dt} - \beta N\frac{d\phi_{III}}{dt} \tag{9}$$

$$V = (2-\beta)Nri_2 + N\frac{d\phi_{II}}{dt} + N\frac{d\phi_{III}}{dt} - \beta N\frac{d\phi_{III}}{dt}\,. \tag{10}$$

By subtracting Eq. (10) from Eq. (9) the following relation is obtained:

$$\left[(1+\beta)i_1 - (2-\beta)i_2\right]Nr + N\left[\frac{d\phi_I}{dt} - \frac{d\phi_{II}}{dt} - \frac{d\phi_{III}}{dt}\right] = 0\,. \tag{11}$$

Since the sum of the flux changes in legs II and III equals that in leg I, Eq. (11) above now becomes:

$$\frac{i_2}{i_1} = \frac{\beta+1}{2-\beta} = \frac{\phi_{II}}{\phi_I} = \frac{d\phi_{II}}{d\phi_I}\,. \tag{12}$$

This equation means that the currents in the two parallel paths are inversely proportional to the resistance of each path and that the ratio of fluxes in legs I and II is the same as the ratio of i_1 to i_2. Hence the ratio of the rate of change of flux and the induced voltage

in these legs is also as i_1 to i_2. These ratios are important in determining the tap β when the ratio of the induced voltages is specified.

Let E_2/E_1 be the specified ratio of the induced voltages for the circuitry shown in Fig. 7a, where E_1 and E_2 are the induced voltages in legs I and II respectively. Then by solving the equation:

$$\frac{\beta + 1}{2 - \beta} = \frac{E_2}{E_1} \tag{13}$$

for β, it is found that:

$$\beta = \frac{2\,\dfrac{E_2}{E_1} - 1}{\dfrac{E_2}{E_1} + 1}\,. \tag{14}$$

In this expression it is assumed that E_1 is larger than E_2 and that E_2 is larger than E_3, which is in agreement with the induced voltages for the circuit of Fig. 7a when switch S_1 is closed.

This analysis has related the values of the induced voltages to the tap β. It will be seen from Eq. (13) that if β is made equal to one-half, then E_1 is equal to E_2. This suggests that if six delta-connected windings are used instead of three, as shown in Fig. 6, then the waveshape shown in Fig. 5 can be produced with six switches, each having 60-degree conduction angle. Some savings in the number of windings can be realized if instead of six delta windings, the winding configuration of Fig. 8 is used. (The six switches would, of course, be connected to center taps of the peripheral windings.) For values of β between zero and one-half, a twelve-step wave can be produced with 30-degree conduction in each switch. The circuit and taps would then be as shown in Fig. 8. If the magnitudes of the voltages are taken as proportional to the sines of their angular positions from zero, as shown in Fig. 9, the tap β from Eq. (14) is found to be:

$$\beta = \frac{2\,\dfrac{E_2}{E_1} - 1}{\dfrac{E_2}{E_1} + 1} = 0.266$$

where the values of E_1 and E_2 are as shown in Fig. 9. If for Fig. 8 β is taken equal to zero, then E_1 equals $2E_2$, and a six-step waveform similar to that in Fig. 4 is produced with six switches, each having 60-degree conduction.

The circuit of Fig. 7 can be used with either a three-phase core or three single-phase cores. With 60-degree conduction in switches, output waveforms shown in Figs. 4 and 5 can be obtained with the tap β equal to zero and one-half, respectively. With tap β equal to one-half and 120-degree conduction in the switches, the output waveform shown in Fig. 5 is obtained. Finally, with twelve switches and $\beta = (2 - \sqrt{3})\,N$, this circuit will produce the twelve-step waveform shown in Fig. 9. In this case, the conduction period in each switch is 30 degrees.

For greater economy in magnetic material, the three-phase core is to be preferred over three single-phase cores. For copper utilization and versatility, the circuit of Fig. 8 has an advantage over that of circuits shown in Figs. 1 and 6 and other circuits illustrated in the literature (7).

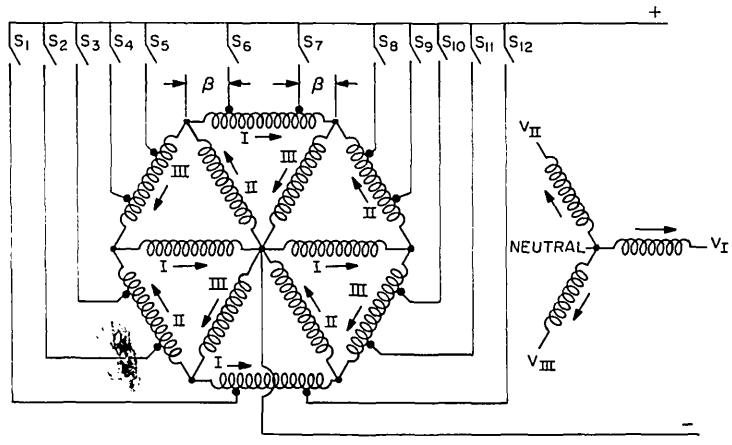

Fig. 8 - Circuit producing the twelve-step waveform shown in Fig. 9; 30-degree conduction in each switch, $\beta = (2 - \sqrt{3})\ N$ (N equals number of turns in each primary winding)

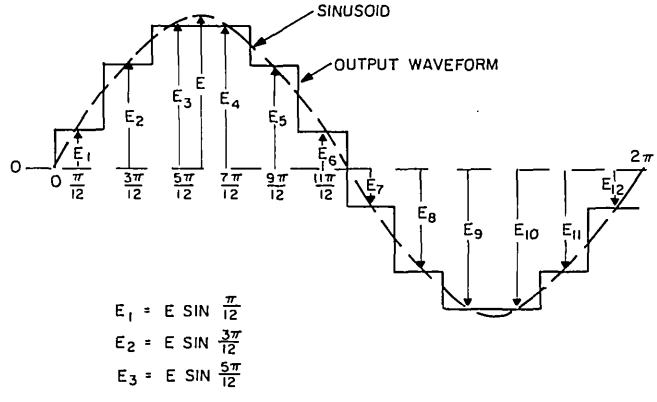

Fig. 9 - Phase voltage output waveform produced by circuit of Fig. 8

Where stepped output waveforms are produced by interconnection of primary transformer windings or multiple windings in series, the power capacity of the inverter is limited to that of the number of switches that can be on at any one time. Hence, this type of circuit has poor switch utilization and limited power capacity, since at best not more than two switches (120-degree conduction) may be on at a time.

FOURIER ANALYSIS OF STEPPED WAVEFORMS

Any periodic function that contains no even harmonics, such as the step waveforms considered here, may be represented by the series:

$$F(\omega t) = A_1 \sin \omega t + A_3 \sin 3\omega t + A_5 \sin 5\omega t \ \ldots + A_n \sin n\omega t. \tag{15}$$

The constants $A_1, A_3, \ldots A_n$ are determined by the following integrals:

$$A_1 = \frac{1}{\pi} \int_0^{2\pi} F(\omega t) \sin \theta \tag{16}$$

$$A_2 = \frac{1}{\pi} \int_0^{2\pi} F(\omega t) \sin 3\theta \tag{17}$$

$$A_n = \frac{1}{\pi} \int_0^{2\pi} F(\omega t) \sin n\theta . \tag{18}$$

It can be shown that for Type I waveforms (Fig. 10a), where there is no "zero dwell," and for Type II waveforms (Fig. 10b), which have a "zero dwell," if the magnitude of the steps (measured from the zero voltage line) are proportional to the sine of the angle (measured from zero degrees to the midpoint of the step), then the step wave is an optimum one. By optimum it is meant that the only harmonics present in the expansion series for the step waveform, $E(\omega t)$, are given by the expression:

$$N = ms \pm 1 \tag{19}$$

where N is the order of harmonic present in the waveform $m = 1, 2, 3, \ldots \infty$, and s is the number of steps.

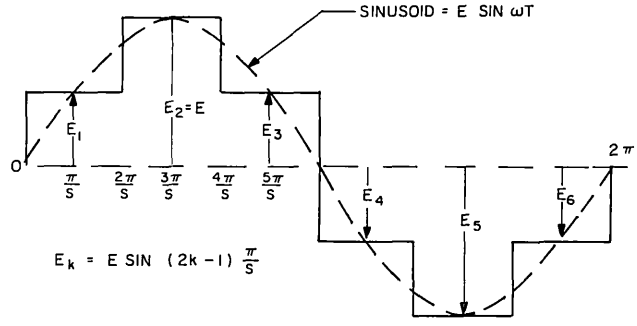

(a) Type I

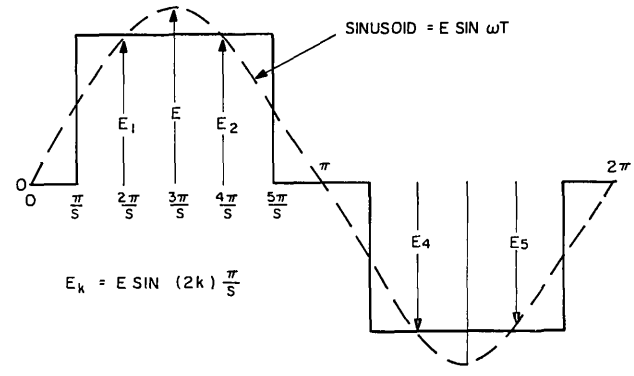

(b) Type II

Fig. 10 - Typical waveforms of six steps ($s = 6$)

This equation can most readily be illustrated by an application of the Fourier expansion to the Type I and Type II waveforms shown in Figs. 4 and 5, respectively. These waveforms are reproduced in Fig. 10a and Fig. 10b, showing a sinusoid passing through the midpoint of each step and indicating angular distances from zero.

The angular distance of each step is $\theta_s = 2\pi/s$. The angular distance to the midpoint of the first step of Type I waveform is π/s, and its magnitude is:

$$E_1 = E \sin \frac{\pi}{s} \tag{20}$$

where E is the maximum amplitude of the superimposed sinusoid. For Type II waveforms the angular distance to the midpoint of the first step is $2\pi/s$, and its magnitude is:

$$E_1 = E \sin \frac{2\pi}{s} . \tag{21}$$

In general:

Type I:

$$E_k = E \sin (2k-1) \frac{\pi}{s} , \qquad k = 1, 2, 3, \ldots s \tag{22a}$$

Type II:

$$E_k = E \sin (2k) \frac{\pi}{s} , \qquad k = 1, 2, 3, \ldots s . \tag{22b}$$

For the six-step waveform of Fig. 10a:

$$E_1 = E \sin \frac{\pi}{6} = -E_4$$

$$E_2 = E \sin \frac{3\pi}{6} = E = -E_5$$

$$E_3 = E \sin \frac{5\pi}{6} = E_1 = -E_6 .$$

Performing the integrations, Eq. (17), to obtain the general expressions for the coefficients of Type I and Type II waveforms, the following expressions are obtained:

Type I:

$$A_n = \frac{2E}{n\pi} \sum_{k=1}^{k=s} \left[\sin (2k-1) \frac{\pi}{s} \times \sin (2k-1) \frac{n\pi}{s} \times \sin \frac{n\pi}{s} \right] \tag{23}$$

Type II:

$$A_n = \frac{2E}{n\pi} \sum_{k=1}^{k=s} \left[\sin (2k) \frac{\pi}{s} \times \sin (2k) \frac{n\pi}{s} \times \sin \frac{n\pi}{s} \right] \tag{24}$$

where n is odd, and the magnitude of the fundamental for both types of waveform is:

Type I:

$$A_1 = E\frac{s}{\pi}\sin\frac{\pi}{s}\sum_{k=1}^{k=s}\frac{2}{s}\left[\sin\,(2k-1)\,\frac{\pi}{s}\right]^2 = E\left(\frac{s}{\pi}\sin\frac{\pi}{s}\right) \tag{25}$$

Type II:

$$A_1 = E\frac{s}{\pi}\sin\frac{\pi}{s}\sum_{k=1}^{k=s}\frac{2}{s}\left[\sin\,(2k)\,\frac{\pi}{s}\right]^2 = E\left(\frac{s}{\pi}\sin\frac{\pi}{s}\right). \tag{26}$$

From Eqs. (25) and (26), it is seen that the maximum value of the fundamental is less than the maximum value of the assumed sinusoid that passes through the midpoint of each step in the step waveform. However, it will also be noted that the peak value of the fundamental approaches that of the sinusoid as the number of steps is increased and that in the limit (i.e., as the numbered steps, s, approaches infinity) both values are identical and there are no harmonics.

It will now be shown that the rms value of the optimum step wave (which is constructed from a theoretical sine wave passing through or tangent to the middle point of each step) is equal in magnitude to the rms value of the superimposed sinusoid (Fig. 10).

Let E be the maximum value of the sinusoid; then its mean square value is:

$$\frac{1}{2\pi}\int_0^{2\pi}(E\sin\theta)^2 = \frac{E^2}{2}\,. \tag{27}$$

The mean square values for Type I and Type II waveforms, respectively, are:

$$E_{ms1} = \sum\frac{1}{s}E_k^2 = \frac{E^2}{2}\sum_{k=1}^{k=s}\frac{2}{s}\left[\sin\,(2k-1)\,\frac{\pi}{s}\right]^2 \tag{28}$$

$$E_{ms2} = \sum\frac{1}{s}E_k^2 = \frac{E^2}{2}\sum_{k=1}^{k=s}\frac{2}{s}\left[\sin\,(k)\,\frac{2\pi}{s}\right]^2\,. \tag{29}$$

To show that the mean square values in the above equations are equal to $E^2/2$, it is necessary to show that the summation terms in Eqs. (28) and (29) are equal to unity. The following expressions for the summation terms in Eqs. (28) and (29) can be written:

$$\sum_{k=1}^{k=s}\frac{2}{s}\left[\sin\,(2k-1)\,\frac{\pi}{s}\right]^2 = \frac{2}{s}\left[\frac{s}{2} - \frac{\sin 2\pi\,\cos 2\pi}{2\sin\frac{2\pi}{s}}\right] \tag{30}$$

$$\sum_{k=1}^{k=s}\frac{2}{s}\left[\sin\,(k)\,\frac{2\pi}{s}\right]^2 = \frac{2}{s}\left[\frac{s}{2} - \frac{\sin 2\pi\,\cos\frac{2\pi}{s}}{2\sin\frac{2\pi}{s}}\right]. \tag{31}$$

It will be noted that for all values of s the expressions on the left are equal to unity, except s equals 2.

It is concluded that the rms value of any optimum step waveform (either Type I or Type II) is equal to the rms value, $E/\sqrt{2}$, of the superimposed sinusoid, and the fundamental, A_1, of the optimum step waveform is $(s/\pi \sin \pi/s)E$. In every case E is the maximum value of the superimposed sinusoid intersecting the midpoint of each step and s, the number of steps, is an even number greater than two.

The total harmonic content of the optimum stepped wave expressed in percent of the fundamental is:

$$\text{percent harmonic content} = 100 \sqrt{\frac{1}{\left(\frac{s}{\pi} \sin \frac{\pi}{s}\right)^2} - 1} \, .$$

The Fourier expansion for any optimum stepped waveform, corresponding to the more general form of Eq. (15), is:

$$F(\omega t) = A_1 \left\{ \sin \omega t + \sum \left[\frac{1}{N_1} \sin N_1 \omega t + \frac{1}{N_2} \sin N_2 \omega t \right] \right\} \tag{32}$$

where

$A_1 = (s/\pi \sin \pi/s)E$

$\omega t = 2\pi f t$

f = fundamental frequency

$N_1 = ms + 1$

$N_2 = ms - 1$

$m = 1, 2, 3, \ldots \infty$

s = number of steps in waveform.

OPTIMUM-OUTPUT WAVEFORM USING INTERCONNECTION OF MULTIPLE SECONDARY WINDINGS

In the generation of stepped waves, there is a relation between the minimum number of switches required and the number of steps in the waveform. For single-phase generation, at least two switches are required (as is the case in the parallel inverter), and the resulting wave is a two-step waveform with 180-degree conduction in each switch. It is possible in this case to generate a "four-step" waveform if the conduction period of each switch is reduced to 90 degrees. During the zero dwell, neither the switches nor the magnetic material is being utilized, and the resulting waveform has no advantage over that for the 180-degree conduction period, which resulted in a two-step waveform. In addition, the proper switching for 90-degree conduction would be more difficult than that for 180-degree conduction.

In general the number of steps in a waveform is equal to the number of switches, and the minimum number of switches is equal to two per phase. It also appears that the maximum utilization of the switches will occur for conduction periods of 180 degrees.

In the inverter circuitry already discussed, it will be noted that 180-degree conduction is not possible when a three-phase core is used; hence the switches cannot be fully utilized. If three single-phase cores are used, 180-degree conduction is possible, and

the switches are fully utilized, but then the sum of the fluxes and flux change is not equal to zero. It is assumed that each switch should carry the same load current and that the ratio of the primary and secondary windings is the same. If, however, the secondary windings are distributed as shown in Fig. 11, the sum of the voltages induced in the three phases of the secondary windings is at each step equal to zero. Since the rate of change of flux in any transformer, say transformer I, is common to the secondary windings of all three phases (C_1, A_2, and C_3 on transformer I) connected on that transformer, then if the sum of the secondary turns ($C_1 + A_2 + C_3$), taking account of direction, is equal to zero, and if this condition is satisfied for the other two transformers, the sum of the induced voltages in the three phases will at all times be equal to zero. To satisfy this condition the algebraic sum of the turns on the secondary of each transformer must equal zero. If the waveforms of each phase are to be the same, the number of turns of the A components (Fig. 11) of each phase must be the same, as must also the turns on the C components. In brief, the following conditions must be satisfied:

$$A_2 = C_1 + C_3$$

$$A_1 = C_2 + C_3$$

$$A_3 = C_1 + C_2 \ .$$

The waveform of the output voltages under these conditions would be the same as that shown in Fig. 4, which is a Type I waveform. The Type II waveform (Fig. 5) is obtained if the A's are made equal to zero. If two sets of transformers similar to the single set of three transformers shown in Fig. 11 are connected with secondary windings, as shown in Fig. 12, where the primes represent the added set of transformers, it is expected that a twelve-step wave can be produced. The condition that the sum of the induced voltages will at each step be equal to zero is satisfied when the turns on the A components are equal and opposite in sign to the sum of the turns on the B and C components, wound on each transformer. The sequence of the component windings in the three phases are arranged to produce similar waveforms 120 degrees apart. To insure optimum output phase voltages requires the selection of the proper ratio of turns in the component windings A, B, and C.

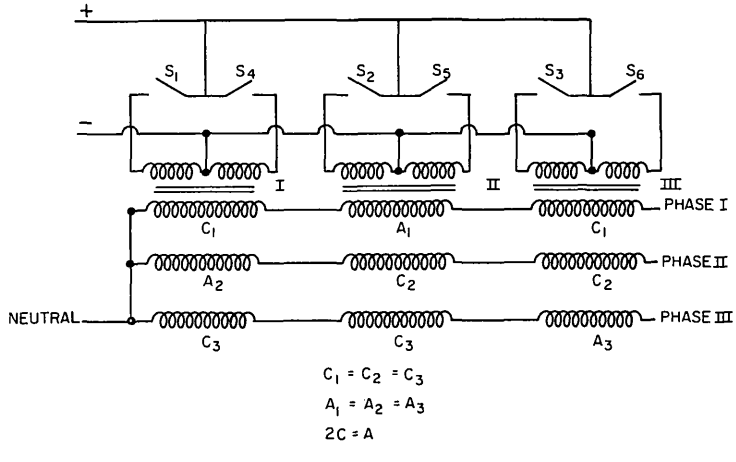

Fig. 11 - Circuit to produce an optimum six-step, Type I waveform (Fig. 10a); 180-degree conduction in switches

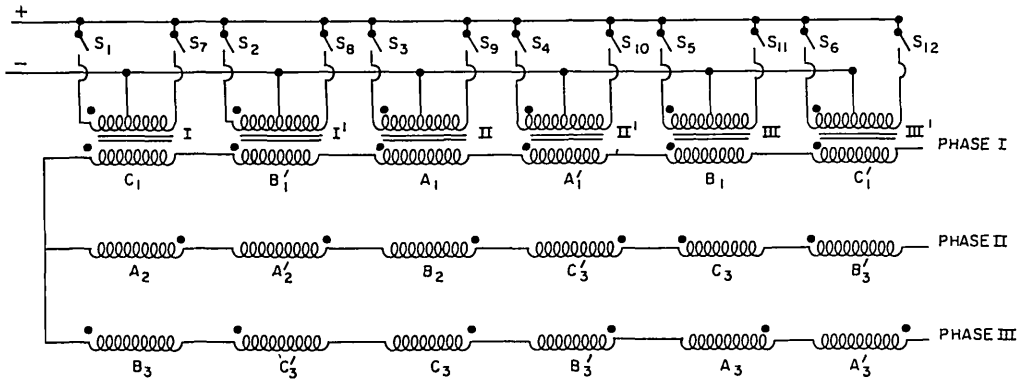

Fig. 12 - Circuit to produce an optimum twelve-step, Type II waveform (Fig. 14b); 180-degree conduction in switches

As 180-degree conduction is assumed for each switch, six switches are on at each step. When switches S_1 to S_6, inclusive, are on, the voltage induced in all component windings of phase I are in the same direction (Fig. 12). The induced voltage is directly proportional to the number of turns, so that for this condition the following equation can be written:

$$E_3 = K(2A + 2B + 2C) = E \sin \frac{6\pi}{12} . \tag{33}$$

At the next step S_1 is turned off and S_7 is turned on, giving another value of induced voltage in phase I:

$$E_2 = K(2A + 2B) = E \sin \frac{4\pi}{12} . \tag{34}$$

At the next step, S_2 is turned off and S_8 is turned on giving:

$$E_1 = K(2A) = E \sin \frac{2\pi}{12} . \tag{35}$$

Continuing in this fashion:

$$E_4 = 0 \tag{36}$$

$$E_5 = -K(2A) \tag{37}$$

$$E_6 = -K(2A + 2B) . \tag{38}$$

Since $E_4 = 0$, the wave is type II. By use of Eqs. (33), (34), and (35), the ratio of the turns on the component winding elements can be determined so that an optimum waveform may be obtained.

If $2A$ in Eqs. (33) through (38) is replaced by A, the following expression for E at each step is obtained:

$$E_1 = K(A + 2B + 2C)$$

$$E_2 = K(A + 2B)$$

$$E_3 = K(A)$$

$$E_4 = -K(A)$$

$$E_5 = -K(A + 2B)$$

$$E_6 = -K(A + 2B + 2C)$$

and a Type I waveform (Fig. 9) is obtained. The secondary wiring configuration for this waveform is shown in Fig. 13. The primary windings, transformers, and switching sequence are the same as in Fig. 12.

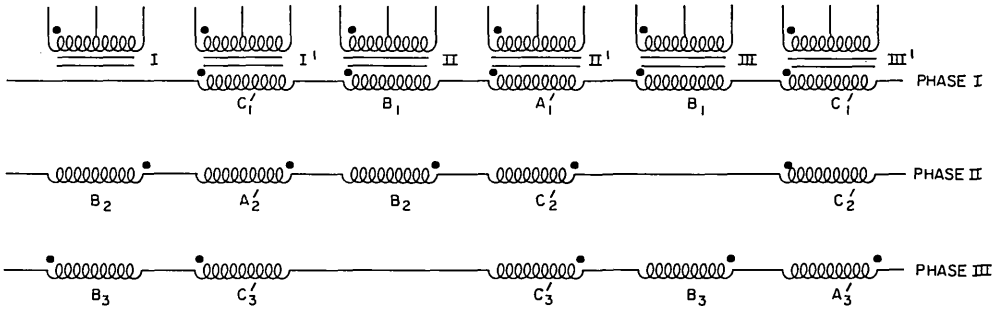

Fig. 13 - Circuit to produce an optimum twelve-step, Type I waveform, switches and transformer primary connections same as Fig. 12; 180-degree conduction in switches

It should be noted that if each set of transformers (Fig. 13) were operated separately so as to produce six-step waveforms, one set (not primed) would give a Type II waveform and the other set (primed) would give a Type I waveform.

In the circuitry shown in Fig. 12, each switch is turned on at 30-degree intervals, and remains on for 180 degrees. If the odd-numbered switches are operated by one system and the even-numbered switches by a second system, there are then two equal-input power channels operating in parallel. The switches in each system operate at 60-degree intervals, and the phase angle between the two systems is 30 degrees. If, however, the output voltages in corresponding elements of the two sets of transformers are examined (Fig. 14), it will be observed that the angle between the A's, B's, and C's are 30, 90, and 150 degrees, respectively. If the composite output waveform is examined, which is the sum of the voltages of all six elements, it will be seen to consist of the sum of three pulse-width-modulated waveforms. Each pulse-modulated wave is the sum of the voltages of two similar elements, and the modulating angle is one-half the angle between these elements. The Fourier expansion for a pulse-modulated rectangular wave is:

$$F(V) = \frac{4V}{\pi}\left[\cos\theta_m \sin\omega t + \frac{\cos 3\theta_m \sin 3\omega t}{3} + \frac{\cos 5\theta_m \sin 5\omega t}{5} + \frac{\cos n\theta_m \sin \omega t}{n}\right]$$

where V is peak of the pulsewidth-modulated wave and θ_m is the modulating angle. In the output stepped wave, when each switch is operated in sequence at equal intervals, this interval is:

$$\theta_s = \frac{2\pi}{s}$$

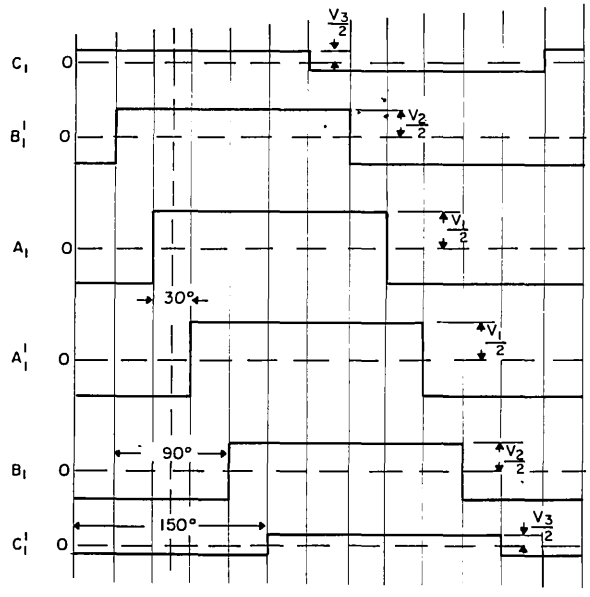

(a) Angular displacement of voltages in winding elements of Fig. 12, phase 1

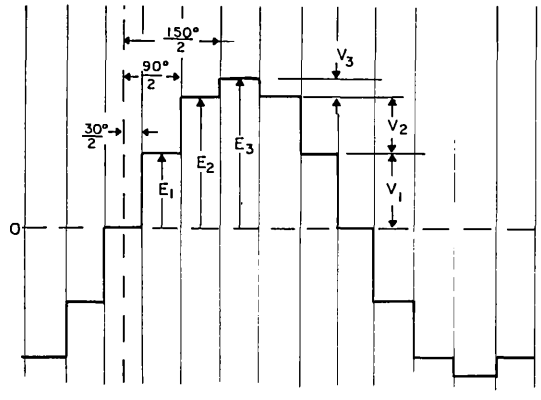

(b) Resultant voltage, phase 1, Fig. 12

Fig. 14 - Voltages induced in secondary windings

where θ_s is the angular length of each step and s is the number of steps in the waveform. In the two input systems shown in Fig. 12, the phase angle between the systems is θ_s (30 degrees). If the angle between the two systems is increased by θ_R, the angle between similar voltage elements in the output voltage will be increased a like amount, as shown in Fig. 15. It will be observed that the modulating angle for the three pulse-modulated waves is equal to one-half the angle between the voltages from which they are formed. For example, the angle between A_1 and A_1' is $(\theta_s + \theta_R)$, and the modulating angle for the pulse-modulated wave formed by the sum of $(A_1 + A_1')$ is $(\theta_s + \theta_R)/2$.

In Fig. 14 the riser heights V_1, V_2, and V_3 can be related to the voltages E_1, E_2, and E_3. In general, for Type II waveforms:

$$V_k = E_k - E_{k-1} .$$

Substituting the value of E_k from Eq. (22):

$$V_K = 2E \cos (2k-1) \frac{\pi}{s} \times \sin \frac{\pi}{s} .$$

If θ_R, the phase-displacement angle between two similar input power channels, is considered variable, the general equation of the output waveform is:

$$F(E) = \frac{8E}{n\pi} \sin \frac{\pi}{s} \sum_{k=1}^{k=s/4} \left\{ \cos (2k-1) \frac{\pi}{s} \cos n \left[(2k-1) \frac{\pi}{s} + \frac{\theta_R}{2} \right] \right\} \sin n\omega t .$$

This equation shows that the regulation varies as one-half the cosine of the regulation angle. For the twelve-step waveform, the summation represents three equations for

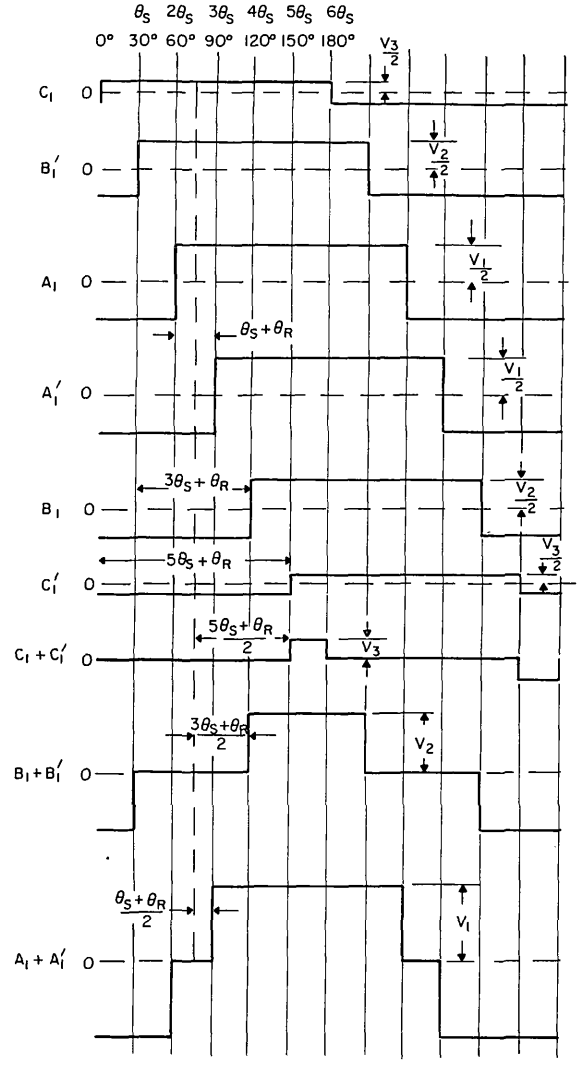

Fig. 15 - Effect of regulation angle, θ_R, on pulse-width-modulated waveform

three pulse-modulated waves shown in Fig. 15. In the diagram it is assumed that the angle of retard on one input system is made equal to the angle of advance on the second system, so as to produce equal leading-edge delay and trailing-edge advance on the pulse-width-modulated square waves. If regulation is obtained by varying the phase angle of only one input system, there will be a change in phase of the output waveform equal to half the change in the regulation angle.

CONCLUSIONS

It has been shown that a stepped-wave output voltage waveform in a three-phase inverter may be produced by two basic circuit arrangements. In the first type of circuit, illustrated in Fig. 8 (for a 12-step optimum output waveform), either a three-phase core or three single-phase cores may be used. This circuit has the advantage that the magnetic structure is simple and that both magnetic material and copper are well utilized. The switches, however, are poorly utilized, since only one switch may be on at a time. Switch utilization and power-handling capacity decrease as the number of steps in the output waveform is increased.

In the second type of circuit, shown in Fig. 12 (for a 12-step optimum output waveform), either six single-phase cores must be used or a multiple-windowed transformer core. In this case the magnetic structure is more complex. However, in addition to good utilization of copper and magnetic material, the switches are well utilized, since six switches are on at each step. The power-handling capacity increases as the number of steps in the output waveform increases. This type circuit also lends itself to voltage regulation within the inverter.

In both types of circuits it is assumed that all switches are turned on for equal time intervals. It is also apparent that for both types of circuits the number of steps in the output waveform is equal to the number of switches and that for three-phase systems the number of switches is a multiple of six. Optimum output waveform in both circuits can be assured by proper selection of the number of turns or tap position, as has been indicated.

REFERENCES

1. Kernick, A., Roof, J.L., and Heinrich, T.M., "Static Inverter with Neutralization of Harmonics," AIEE Conference Paper CP 61-891, Apr. 28, 1961

2. Corey, P.D., "Methods for Optimizing the Waveform of Stepped-Wave Static Inverters," AIEE Conference Paper CP 62-1147, May 28, 1962

3. "Static Power Inverter Utilizing Digital Techniques and Harmonic Cancellation," AIEE Conference Paper CP 62-1148

4. Klimo, R.G., Krejny, E.L., Larsen, A.B., Resch, R.J., and Murray, J.E. of TRW, Inc., "Optimization Study of High Power Static Inverters and Converters," Report NASA CR-54186, TRW-ER-6586, Sept. 14, 1964

5. Bedford, B.D., and Hoft, R.G., "Principles of Inverter Circuits," John Wiley & Sons, Inc., New York, 1964

6. Hudson, C.S., "Notes on the Design of Static Inverters," RAE Tech. Note EL185, Royal Aircraft Establishment, London, W.C.2, Sept. 1960

7. Hanrahan, D.J., and Gardner, W.K., "Three-Phase Static Inverter with Waveform Synthesis," NRL Report 5879, Jan. 21, 1963

8. Murphy, H., "Developing True Solid-State Static Alternators," Electronics 36(21): 58-61 (May 24, 1963)

9. Rochwalski, A.Z., "Quasi-Square Waveform Drive High Efficiency Static Inverter," Electronic Design, Sept. 13, 1963

10. Malone, W., "Need a Small Power Inverter?," Electronic Design, Apr. 26, 1966

Security Classification

DOCUMENT CONTROL DATA - R & D

(Security classification of title, body of abstract and indexing annotation must be entered when the overall report is classified)

1. ORIGINATING ACTIVITY (Corporate author) Naval Research Laboratory Washington, D.C. 20390	2a. REPORT SECURITY CLASSIFICATION Unclassified 2b. GROUP --

3. REPORT TITLE

POWER CIRCUITS FOR OPTIMUM STEPPED-WAVE OUTPUT IN THREE-PHASE SINGLE-WAY STATIC INVERTERS

4. DESCRIPTIVE NOTES (Type of report and inclusive dates)

An interim report on one phase of the problem.

5. AUTHOR(S) (First name, middle initial, last name)

John P. O'Connor

6. REPORT DATE March 6, 1967	7a. TOTAL NO. OF PAGES 28	7b. NO. OF REFS 10
8a. CONTRACT OR GRANT NO. NRL Problem E01-05 b. PROJECT NO. RR 008-03-46-5675 c. d.	9a. ORIGINATOR'S REPORT NUMBER(S) NRL Report 6497 9b. OTHER REPORT NO(S) (Any other numbers that may be assigned this report)	

10. DISTRIBUTION STATEMENT

Distribution of this document is unlimited. Copies available from CFSTI.

11. SUPPLEMENTARY NOTES	12. SPONSORING MILITARY ACTIVITY Department of the Navy (Office of Naval Research), Washington, D.C. 20360

13. ABSTRACT

In the three-phase, single-way inverters considered, the stepped-wave approach offers the great advantage of an output waveform that approaches that of a sinusoid. The single-way type inverter is advantageous where the input dc voltage is low, since in this type of inverter the voltage drop in only one switch need be considered.

Fourier analysis of a stepped-wave output shows that if the center of each step lies on a sinusoid, the lowest harmonic present is one less than the number of steps in the waveform.

Various circuit configurations using single-phase and three-phase cores, which involve interconnection of multiple primary transformer windings, are considered for producing stepped waves with minimum harmonic content. These types of circuit configurations result in poor switch and copper utilization, and have limited power capability.

Circuit configurations where interconnection of multiple secondary transformer windings are used result in good copper and switch utilization, and the power capability increases as the number of steps (or switches) is increased.

(Over)

DD FORM 1 NOV 65 1473 (PAGE 1)

S/N 0101-807-6801

Security Classification

14. KEY WORDS	LINK A ROLE	LINK A WT	LINK B ROLE	LINK B WT	LINK C ROLE	LINK C WT
Power equipment Inverters Three-phase inverters Static inverters Solid state Switches Stepped wave						

If in a multiswitch three-phase inverter one half the total number of switches are considered as one input system and the other half as a second input system, voltage regulation may be obtained by varying the phase relation between the two input systems.

For three-phase power applications where the input dc voltage is low, inverter-circuit configurations using interconnection of multiple secondary transformer windings appears attractive. The limiting factor is the current-carrying capacity of the solid-state switches, but where greater power capability is required more switches may be added, with a resultant improvement in output waveform and therefore lower filtering requirements. Some savings in transformer magnetic material can be achieved by the use of a multiple-windowed transformer core, in contrast to the use of separate cores for each pair of power switches used. There is, then, the difficulty in the fabrication of the multiple-windowed core in addition to winding problems over and above that encountered in using the readily available single cores.