UNCLASSIFIED

NRL Report 6044

# System for Measuring Seebeck Coefficient and Resistivity

J. E. Ivory

*Energy Conversion Branch*
*Electronics Division*

February 19, 1964

**U.S. NAVAL RESEARCH LABORATORY**
**Washington, D.C.**

## ABSTRACT

A system has been devised which combines a rapid method for measuring Seebeck coefficient with the Dauphinee and Mooser circuit for measuring resistivity. This system can be used from liquid helium temperature to 1000°C. A temperature range from room temperature to 1000°C and back can be covered in less than 3 hours giving about 20 data points per hour for each of the two quantities measured.


## PROBLEM STATUS

This is a final report on this particular phase of the problem; work is continuing on other phases of the overall problem.

## AUTHORIZATION


NRL Problem E02-02
Projects RR 010-01-44-5601 and SF 013-06-29-2857

Manuscript submitted November 14, 1963.

UNCLASSIFIED

# SYSTEM FOR MEASURING SEEBECK COEFFICIENT AND RESISTIVITY

## INTRODUCTION

Seebeck coefficient and resistivity are included among the transport properties of materials. The purpose of this report is to describe a rapid method for measuring Seebeck coefficient and resistivity of electrical conducting materials which are in the form of a wire or bar. The system used for measuring Seebeck coefficient has been described in Ref. 1 without presenting much detail of the experiment. The circuit used for measuring resistance has been described by Dauphinee and Mooser (2). The system described here is capable of measuring the Seebeck coefficient and resistivity concurrently. It is, of course, possible to make these measurements on separate runs, but this is time consuming and if any irreversible changes take place in the heating of the sample, they would be seen only on the first run and not on any subsequent runs.

## SEEBECK COEFFICIENT

The Seebeck coefficient of a material can be measured by holding one end of a sample at a fixed temperature and varying the temperature of the other. The emf developed between the ends is then plotted as a function of the temperature of the variable end, and the slope of this curve is the Seebeck coefficient or the thermoelectric power of the material. This method demands a long sample so that large temperature differences can be obtained across the ends.

An alternate method can be used for shorter samples. In this method both ends of a sample are varied in temperature and the emf developed across the ends is measured at a fixed temperature difference between the ends. This emf divided by this temperature difference is the Seebeck coefficient at the average temperature of the sample. This latter method is really equivalent to the first since it actually approximates the slope of the voltage vs temperature curve. The true value of the Seebeck coefficient is defined to be the limit of the emf divided by the temperature difference as the temperature difference between the ends approaches zero. The major portion of this report will deal with an experiment which uses this second method and, in addition, allows the measurement to be made in the limit as the temperature difference approaches zero.

The Seebeck coefficient of a sample $s$ with respect to a material $a$ can be defined with the aid of Fig. 1 as

$$\alpha_{sa} = \lim_{\Delta T \to 0} \frac{E_{13}}{\Delta T} \tag{1}$$

where $\alpha_{sa}$ is the Seebeck coefficient of the sample measured with respect to material $a$. $E_{13}$ is the Seebeck voltage measured across terminals 1 and 3 with a temperature difference $\Delta T$ between the two junctions of $s$ and $a$. $\Delta T$ can be measured in terms of the difference in voltage measured by the two thermocouples attached to the sample. This can be expressed by the relation

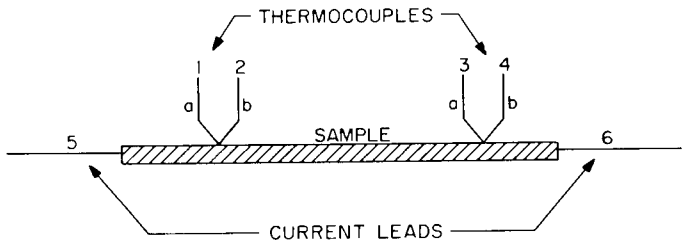


Fig. 1 - Schematic diagram showing electrical connections to the sample

$$\Delta T = \frac{E_{12} - E_{34}}{\alpha_{ba}} \tag{2}$$

where $E_{12}$ and $E_{34}$ are the voltages of the upper and lower thermocouples, respectively, and $\alpha_{ba}$ is the Seebeck coefficient of the couple formed by materials b and a. Inserting Eq. (2) into Eq. (1) gives

$$\alpha_{sa} = \lim_{E_{12} \to E_{34}} \frac{E_{13}}{E_{12} - E_{34}} \alpha_{ba} . \tag{3}$$

This expression, with the limit condition omitted, is generally used in making thermopower measurements on materials. This omission is not serious since the Seebeck voltage is usually a slowly varying function of temperature. In order to determine $\alpha_{sa}$, using the above expression, three voltage readings are required as well as the value of $\alpha_{ba}$ at the average temperature of the sample. Good furnace control is necessary to hold the temperature constant while this set of readings is being taken. Matched couples are necessary to ensure an accurate value of $\Delta T$, and a match in the 1 and 3 leads is necessary to ensure an accurate $E_{13}$ voltage. If this match is not good, the error in $\alpha_{sa}$ increases as the $\Delta T$ across the sample decreases. That is, if $\Delta T$ is large, a small constant error represents a small percentage change in value, but this error can become appreciable at smaller $\Delta T$ values.

However, there is an experimental procedure which can be used to measure $\alpha_{sa}$ as $\Delta T$ approaches zero which, at the same time, is not dependent upon matched couples and matched voltage leads and does not demand good furnace control. This system was first reported in Ref. 1. An alternate and more direct derivation of the equation used in Ref. 1 will be developed here: Equation (1) may be written as

$$\alpha_{sa} = \frac{dE_{13}}{dT} . \tag{4a}$$

It follows that

$$\alpha_{sb} = \frac{dE_{24}}{dT} . \tag{4b}$$

Dividing Eq. (4b) by Eq. (4a) gives

$$\frac{dE_{24}}{dE_{13}} = \frac{\alpha_{sb}}{\alpha_{sa}} . \tag{5}$$

Substituting

$$\alpha_{sb} = \alpha_{sa} - \alpha_{ba}$$

into Eq. (5) we obtain

$$\alpha_{sa} = \frac{\alpha_{ba}}{1 - \frac{dE_{24}}{dE_{13}}} \tag{6}$$

or

$$\alpha_{sa} = \frac{\alpha_{ba}}{1 - m} \tag{7}$$

where

$$\frac{dE_{24}}{dE_{13}} = m . \tag{8}$$

Therefore, we see from Eq. (7) that $\alpha_{sa}$ can be expressed in terms of $\alpha_{ba}$ and the slope of a plot of $E_{24}$ vs $E_{13}$. Small constant voltages caused by unmatched leads will not alter this slope and therefore the problems mentioned earlier for an unmatched situation are not present here. In order to obtain a plot of $E_{24}$ vs $E_{13}$, it is necessary for the temperature difference across the sample to vary. It is also possible to have this temperature difference pass through the zero value, and therefore, the slope can be measured at a point corresponding to a zero $\Delta T$.

## SEEBECK MEASURING EQUIPMENT

The sample to be measured is placed in a quartz tube as shown in Fig. 2 after the thermocouples and current leads have been spot welded to it. The two heaters surrounding the quartz tube are all that is required to bring the sample to any temperature up to 1000°C and provide the slowly varying gradient required for the Seebeck measurement. The heaters are surrounded by fire brick to provide thermal insulation. Details of the heaters are given in Appendix A. The thermocouples should be attached to the sample at approximately the center of each heater. Each heater is controlled by a Variac, and these two Variacs are fed by another common Variac for finer control.

The atmosphere inside the tube is helium, which flows through at a very slow rate. Before entering the tube, it passes through another tube filled with red hot titanium chips which take any oxygen out of the helium. The heater for the titanium is the same type used for heating the sample. After the gas passes through the tube, it is bubbled through vacuum pump oil. This prevents back-diffusion of air and also gives an indication of the flow rate. The leads from the sample are brought out one end of the quartz tube and an airtight seal is formed with a nonhardening puttylike substance called Duxseal (Johns-Manville product). The wires are insulated with spaghetti as they pass through this seal, but in the hot region ceramic insulation is used. The wires from the sample are then connected to copper leads in a shielded cable, and these junctions are immersed in an ice bath.

The electrical circuit used in measuring the Seebeck coefficient is shown in Fig. 3. The resistivity circuit is connected with the circuit but is not shown in this figure to avoid confusion. One of the connections to one of the dc amplifiers is grounded while the similar connection to the other amplifier is connected to ground through a capacitor. All

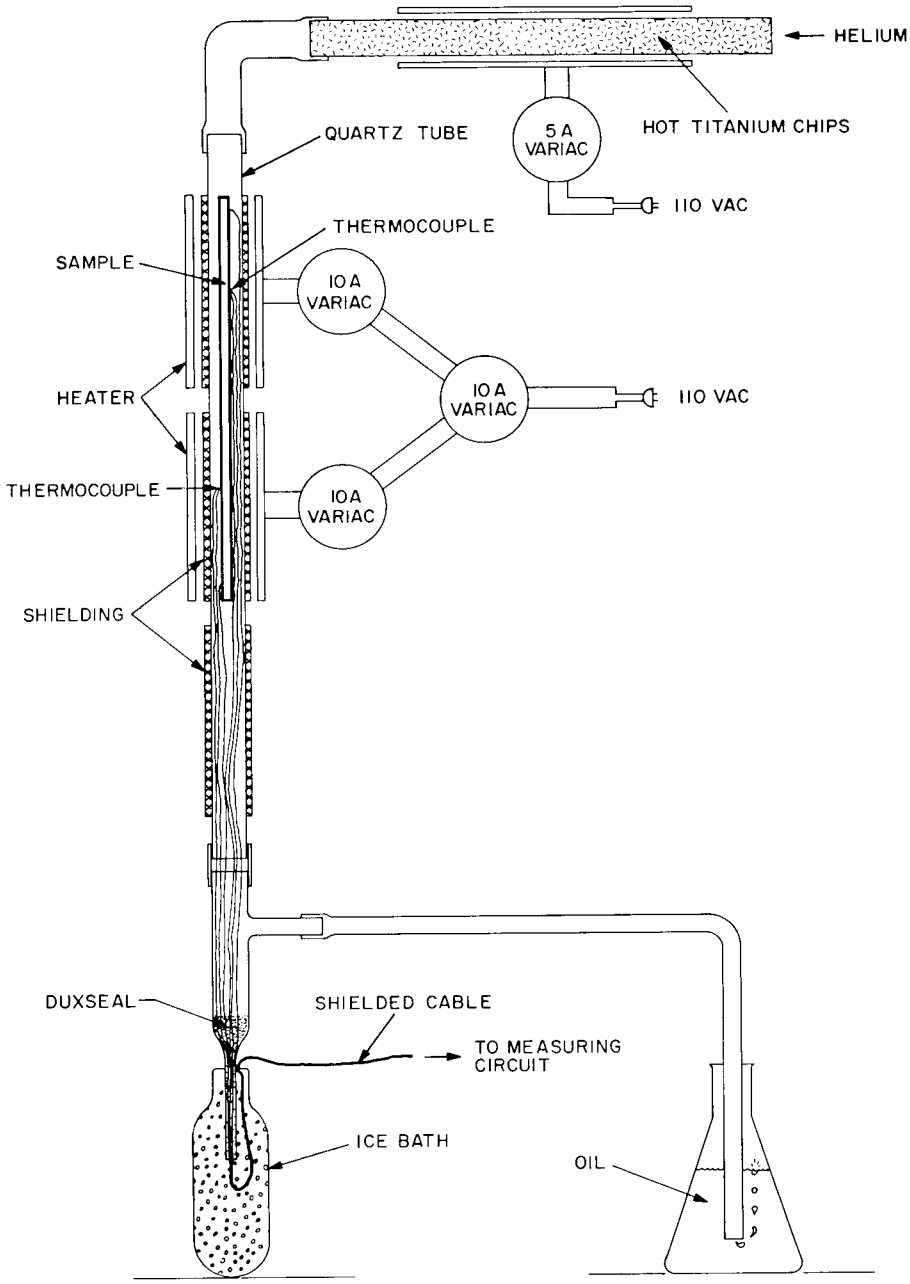


Fig. 2 - Schematic diagram showing the sample in position for measurement

the leads are shielded, including the leads within the quartz tube. The latter are shielded by three sections of chromium-nickel screen, one under each heater and one over the remaining portion of the tube containing the leads. For temperatures below about 500°C, this shielding on the quartz tube is not important.

The output of either couple can be displayed on an AZAR (adjustable zero-adjustable range) recorder. This is operated with a 1-mv span and bucking voltages up to 50 mv. The dc amplifiers are fed by the voltage developed across the sample, which can be

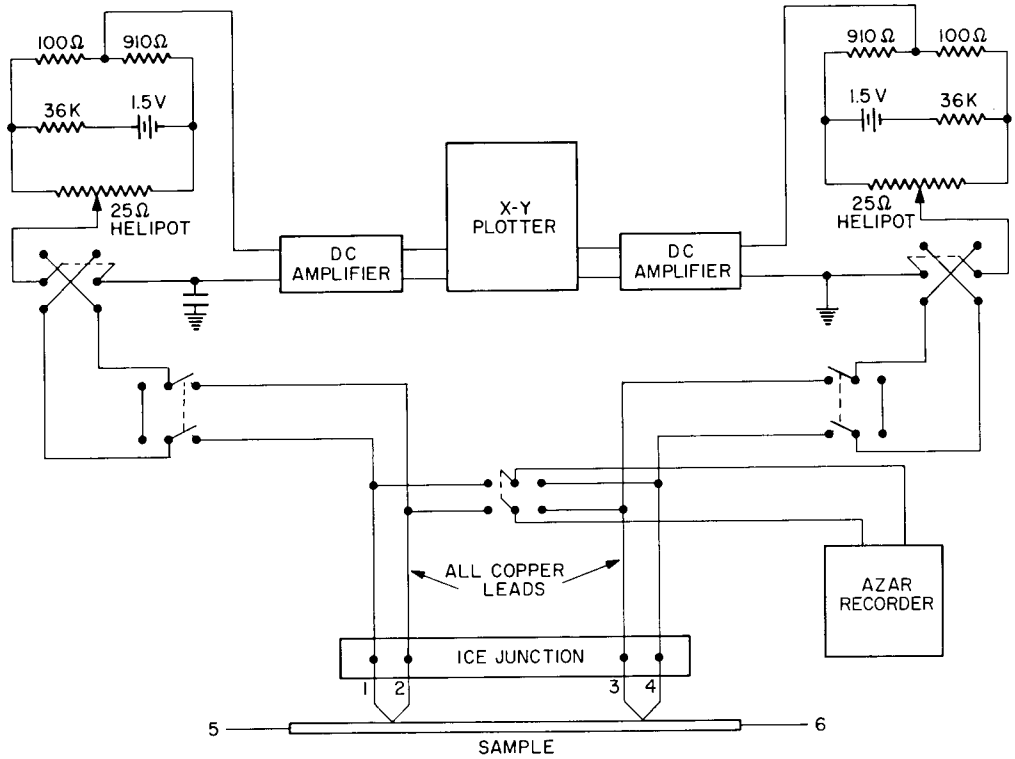


Fig. 3 - Circuit for measuring Seebeck coefficient

bucked out by the circuit shown. The x-y recorder (0 to 10 mv for either axis) is fed by the two dc amplifiers. A 50-$\mu$v input to the amplifier will produce full-scale deflection of 10 inches on the x-y recorder.

The procedure used for obtaining data is as follows. The sample temperature is brought to the desired value by adjusting the Variacs and viewing the couple outputs on the AZAR recorder. Since each end of the sample is controlled by a separate Variac, in most cases the temperature on the ends will be slightly different. The Variacs are then adjusted so that the temperature approaches the average value of the two. When they get within a few degrees of each other, the output of the dc amplifier can be switched from a meter on the amplifier to the x-y recorder, and the speed of motion of the pen can be studied. This speed may be varied by varying the rate of change of $\Delta T$ across the sample. With the bucking circuits the pen can be repositioned when it reaches the end of its travel (pen is up at this stage). When the two temperatures approach each other, the chart drive on the AZAR (3-3/4 in. per min.) is turned on to record the output of one couple. Then the pen on the x-y recorder is positioned and dropped. Immediately the AZAR is switched to the other couple. When the end of the travel is reached on the x-y recorder, the pen is lifted and the AZAR is switched back to the first couple. Typical plots of the couple are shown in Fig. 4. Nine different sets of readings are shown, each separated from the rest by the heavy horizontal lines. The corresponding data obtained on the x-y plotter is shown in Fig. 5. The dotted lines on the temperature plots (Fig. 4) are an interpolation indicating the variation in output of the couple not being monitored during the actual x-y plotting. These thermocouple plots are then used to determine the average temperature of the sample. With this system it is possible to obtain about 20 such traces per hour and to go through a temperature range from room temperature to 1000°C and back in less than 3 hours.

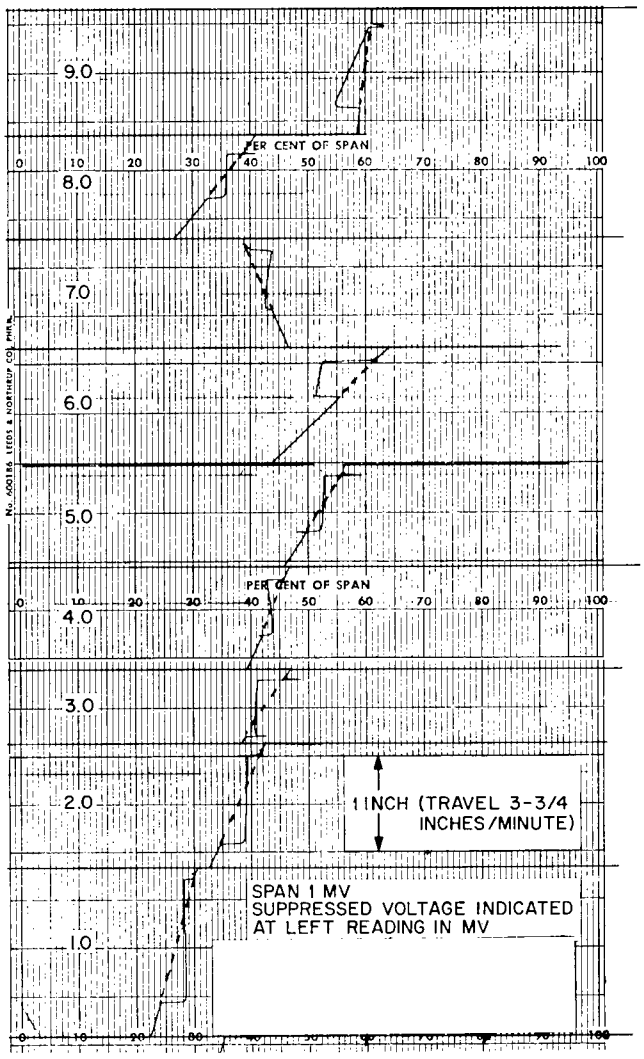


Fig. 4 - Typical plot of thermocouple outputs vs time. Nine sets of readings are shown

## LOW TEMPERATURE MEASUREMENTS

The same system just described can be applied to below room temperatures. In this case the quartz tube with heaters is immersed in a Dewar vessel after the entire tube has been wrapped with polyethelene. This keeps the coolant from making direct contact with the heaters. Either liquid nitrogen or liquid helium can be placed in this Dewar. In the case of liquid helium, the inner Dewar is placed inside another Dewar containing liquid nitrogen. In either case helium gas is passed through the tube to prevent condensation of other gases in the system, but the gas does not have to be purified. The heaters for the low temperature equipment may be made by winding asbestos-covered nichrome around the tube. This is wound noninductively as shown in the Appendix, and no shielding is required around the tube for the low currents used. This heater design has been tried at the high temperatures, but was found to be not as reliable as those made of nichrome in ceramic.

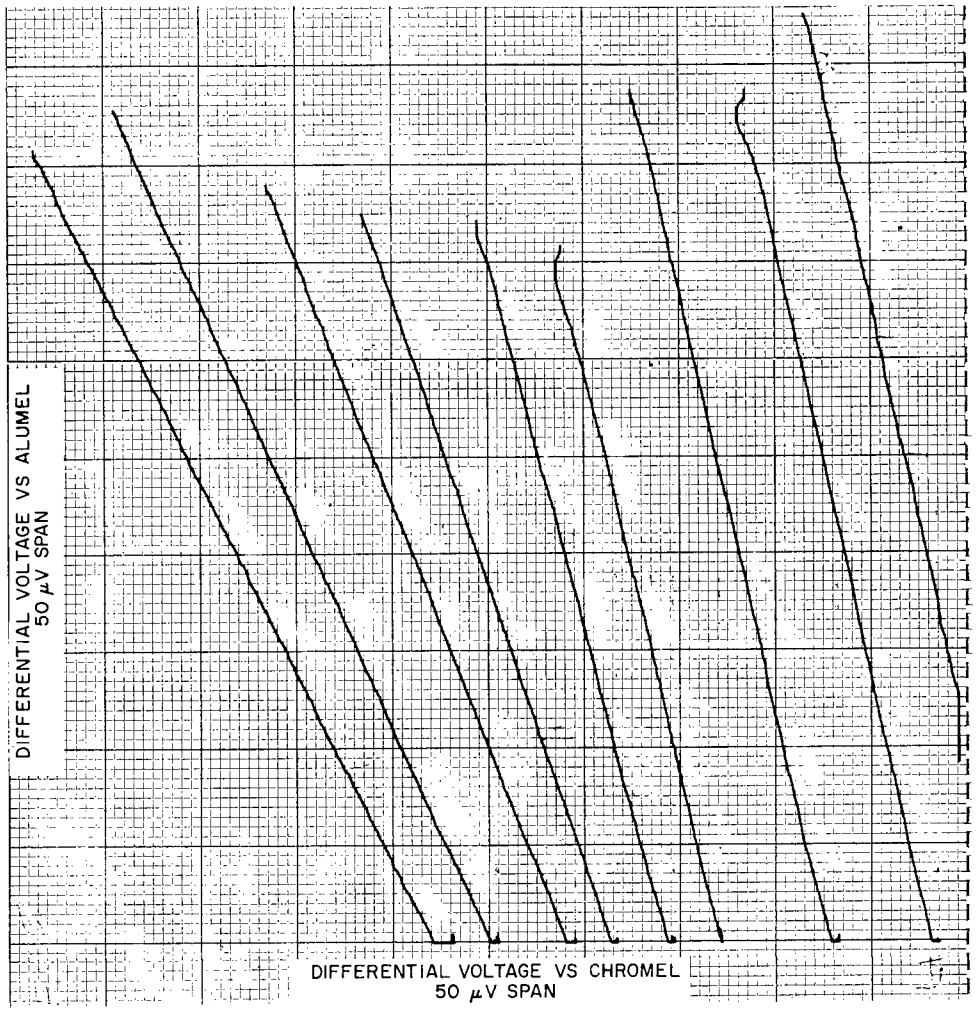


Fig. 5 - Typical x-y plot. Each line represents a separate measurement

## CHOICE OF THERMOCOUPLES

In choosing a couple to be used in making thermoelectric power measurements, several things should be considered. First, the couple materials must not contaminate the sample to be measured. Also, it is convenient if the couple material can be spot welded to the sample or soldered in the case of low temperature measurements. Other considerations can be obtained by examining the relation given in Eq. (7). Since a slope is involved in the measurement, it would be interesting to see how sensitive $\alpha_{sa}$ is to errors made in measuring this angle.

Equation (7) may be written in the form

$$\alpha_{sa} = \frac{\alpha_{ba}}{1 - \tan\theta} \tag{9}$$

where $m = \tan\theta$.

Taking the log of this equation, we get

$$\ln \alpha_{sa} = \ln \alpha_{ba} - \ln (1 - \tan \theta) . \tag{10}$$

Differentiating,

$$\frac{d\alpha_{sa}}{\alpha_{sa}} = \frac{d\alpha_{ba}}{\alpha_{ba}} + \frac{\sec^2\theta \, d\theta}{(1 - \tan \theta)} \tag{11}$$

or

$$\frac{d\alpha_{sa}}{\alpha_{sa}} = \frac{d\alpha_{ba}}{\alpha_{ba}} + \frac{d\theta}{\cos \theta \, (\cos \theta - \sin \theta)} . \tag{12}$$

Therefore we see that the relative error in measuring $\alpha_{sa}$ is given by the relative error in $\alpha_{ba}$ of the measuring couple plus a term dependent upon the uncertainty in the angle $\theta$. The coefficient of this term is plotted as a function of angle in Fig. 6. The uncertainty of measuring $\theta$ with a protractor is about ±3.0 minutes and this, of course, is independent of $\theta$. The error associated with the angle term will vary as the coefficient varies. This will not be a constant error, but will result in scatter in the data. This can be minimized by taking many points. The first term in Eq. (12) suggests a couple with the smallest percentage error. This discussion may be summarized by saying that the absolute thermopower of the two materials of the couple should be as far apart as possible and the material to be measured should lie between the two but not close to either one. This last condition is not possible with semiconductors using metal couples, but the first condition can be applied.

## RESISTIVITY MEASUREMENTS

Resistance of a sample may be made by passing a known current through it and measuring the emf across two points along the sample. The voltage across the sample is then expressed in terms of an IR drop, and if the current is known, R can be determined. If R, the distance between potential probes, and the cross-sectional area of the sample are known, the resistivity can be found. However, when good thermoelectric materials are being measured, the voltage mentioned above is composed of the IR drop plus a term due to the Seebeck voltage, $\alpha\Delta T$. This temperature gradient can be produced by a gradient in the furnace or by the current passing through the sample. In the latter case, the gradient is set up by Peltier heat absorbed at one junction of the sample and current lead, and rejected at the other current junction. Dauphinee and Mooser designed a circuit (2) that eliminated the problem of thermal gradients in a sample. The gradient due to the furnace, if constant, does not affect the measurements, and the effects of Peltier heat are not present since the direction of the current through the sample is alternated by a chopper. Thus, at one junction heat is produced for one current direction and removed in the next half cycle when the current reverses. An analysis of this circuit has been published by van der Pauw (3) with a recommendation of some improvements to this circuit. The Dauphinee and Mooser circuit is shown in Fig. 7. This is wired in with the circuit for the thermopower in Fig. 3. The two are separate only for clarity of discussion.

The circuit used here is the same as the original one described by Dauphinee and Mooser, except that it employs a 1000-ohm helipot instead of 25 ohms to minimize lead resistances. Also because of lead resistance the instrument is most sensitive in the central portion and should not be used near either end. The ends can be avoided by changing the standard resistor. The chopper used here is manufactured by Guild Line

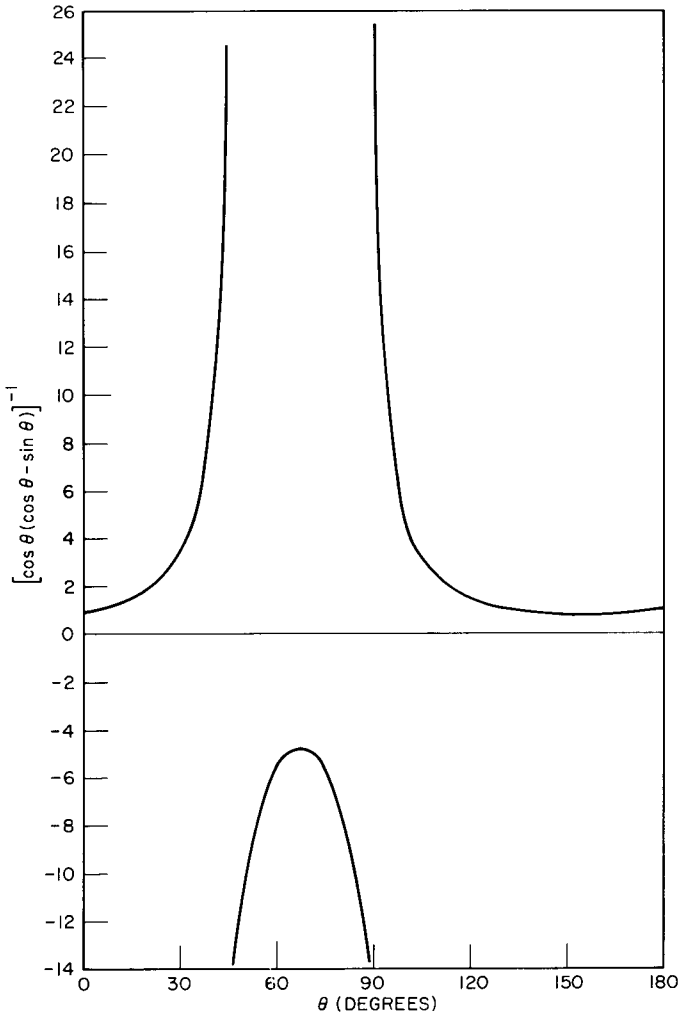


Fig. 6 - Plot relating the relative uncertainty in $\alpha_{sa}$ to the uncertainty in angle $\theta$ as expressed in Eq. 12

Instruments, Ltd. of Ontario, Canada, and was driven at about 30 cps. Balance is observed on a Leeds and Northrup galvanometer with a sensitivity of a 0.40 $\mu$v/mm.

These measurements were taken just before or just after the Seebeck measurements. Small gradient changes necessary for Seebeck measurements produced negligible effect on the resistance measurements.

## SMALL SAMPLE PROBLEMS

In measuring Seebeck coefficient it is necessary that each thermocouple be at the same temperature as the region of the sample to which it is attached. That is, there should be no heat flow between the couple and the sample. In metal samples in the form of a wire or bar, this condition can be met if the sample extends beyond the measuring couples. The portion of the sample extending beyond the couples carries the majority of axial heat flow to and from the section between the couples. If these extensions are

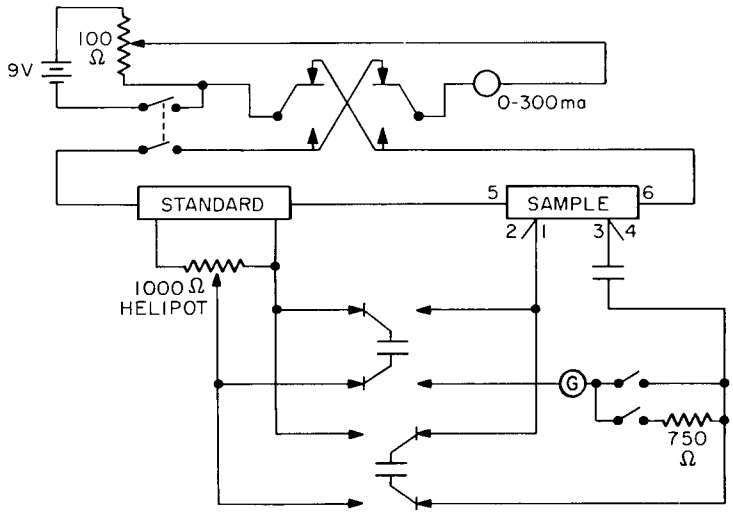


Fig. 7 - The Dauphinee and Mooser circuit

removed, the couple must carry more heat to obtain the same $\Delta T$ across the sample. This leads to errors in the Seebeck coefficient measurements since the couples will no longer be at the same temperature as the surface it is contacting. Special jigs can be used to avoid this, but this will not be discussed here since we are still working on this problem. The errors introduced are dependent upon the thermal conductivity of the sample and for semiconductors (poor thermal conductors), the errors seem to be negligible.

It should also be pointed out that some uniformity is needed in samples to obtain resistivity, but this is not true for Seebeck measurements.

## ACKNOWLEDGMENTS

The author is indebted to Dr. W. H. Lucke and D. M. Horan for many helpful discussions.

## REFERENCES

1. Ivory, J.E., "Rapid Method for Measuring Seebeck Coefficient As $\Delta T$ Approaches Zero," Rev. Sci. Instr. 33:992 (1962)

2. Dauphinee, T.M., and Mooser, E., "Apparatus for Measuring Resistivity and Hall Coefficient of Semiconductors," Rev. Sci. Instr. 26:660 (1955)

3. van der Pauw, L.J., "An Analysis of the Circuit of Dauphinee and Mooser for Measuring Resistivity and Hall Constant," Rev. Sci. Instr. 31:1189-92 (1960)

UNCLASSIFIED

# APPENDIX A

## HEATER CONSTRUCTION

Figure A1 shows the details of the two types of heaters used for the Seebeck coefficient apparatus. Both heaters are noninductively wound with No. 26 or No. 28 B and S gage nichrome wire. About 12 ft of wire is used in each of the heaters. Those for use at high temperature are insulated by ceramic thermocouple tubing cut in 3 inch lengths. These are placed around the quartz tube over chromium-nickel screening used for shielding. This shield does not extend beyond the end of the ceramic tubes to avoid contact with the heater wire. The lower temperature heaters are wound around the quartz tube with the wire doubled as shown. The length of these heaters is about 3 to 4 inches. Both of these designs provide low thermal inertia heaters which are very compatible with the system described here.

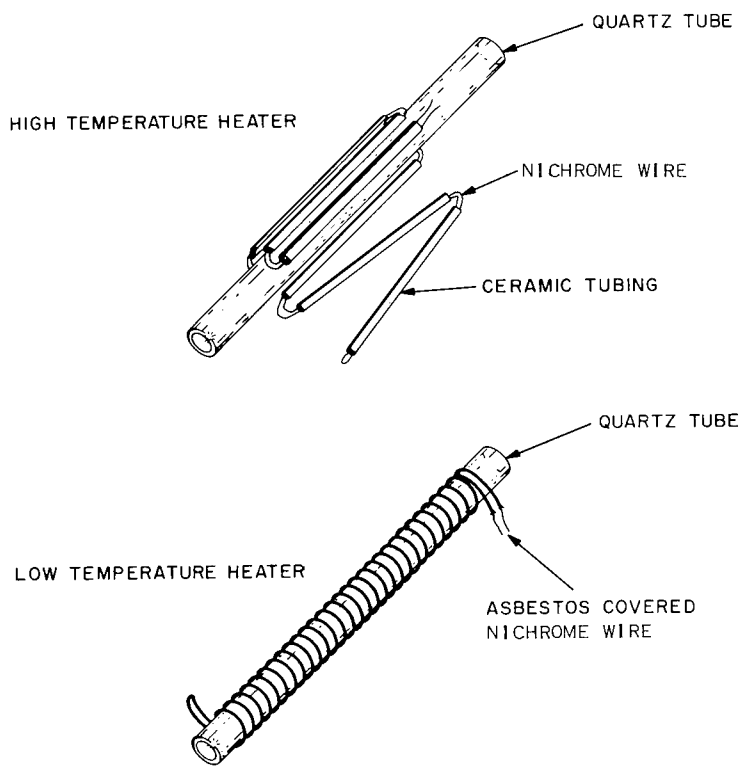


Fig. A1 - Details of heaters used in measuring equipment