FT

UNCLASSIFIED

NRL Report 6033

THE SULFATE CYCLE FOR CARBON DIOXIDE REMOVAL AND OXYGEN GENERATION

A. L. Pitman

Electrochemistry Branch
Chemistry Division

and

S. T. Gadomski

Inorganic and Nuclear Chemistry Branch
Chemistry Division

February 18, 1964

U. S. NAVAL RESEARCH LABORATORY
Washington, D.C.

CONTENTS

Abstract	ii
Problem Status	ii
Authorization	ii
INTRODUCTION	1
ELECTROLYSIS	3
Design of the Electrolyzer	3
Operation of the Electrolyzer	4
OPERATIONS WITH ASBESTOS DIAPHRAGMS	5
Operating Conditions	5
Intermediate Protective Material	6
Corrosion	7
OPERATIONS WITH MICROPOROUS RUBBER DIAPHRAGMS	8
Diaphragm Research Group	8
Porosity Problems	8
Electrical Problems	9
Micronized Carbon Impregnant	10
CURRENT EFFICIENCIES	11
OXYGEN PURITY	11
POWER REQUIREMENTS	12
CARBON DIOXIDE ABSORPTION	12
NEUTRALIZATION OF CATHOLYTE AND ANOLYTE	13
CONCLUSIONS AND RECOMMENDATIONS	14
ACKNOWLEDGMENT	14
REFERENCES	15

Copies available from Office of Technical Services
Department of Commerce - $.50

ABSTRACT

A laboratory-scale plant of the sodium sulfate cycle system for oxygen generation and carbon dioxide removal aboard nuclear-powered submarines has been constructed and operated. Joint operation of the major components, each of which had previously been separately evaluated in the laboratory, was considered successful. The diaphragms used in the electrolytic cell were expected to provide difficult problems, and although asbestos diaphragms were known from the start to have a limited usefulness under anodic conditions, they proved to be more troublesome than anticipated. Fortunately, a diaphragm research group was able to recommend a replacement material, and using microporous rubber diaphragms in miniature electrolytic cells, achieved several continuous runs of 125 days.

Diaphragm problems in the laboratory-scale plant, however, continued as attempts were made to generate higher concentrations of alkali than had been made in the miniature cells. New difficulties appeared with an increase in porosity of the cathode diaphragms caused by the leaching action of sodium hydroxide on a residue of silica-gel which had been used as a pore forming material in manufacturing microporous rubber. Attempts to solve this problem were only partially successful, and it became evident that single sheets of microporous rubber which were free of leachable silica but had the specified porosity were required as anodic and cathodic diaphragms. While such diaphragms are not on hand, they could be made available commercially as soon as a demand should develop.

With the diaphragm problem considered solved if the designated microporous rubber were used, results obtained on the laboratory-size sulfate cycle system establish the feasibility of this system for nuclear-submarine service.

PROBLEM STATUS

This is a final report on this phase of the problem; work is continuing on other parts of the problem.

AUTHORIZATION

NRL Problem C08-18
BuShips Project SF 013-08-03,
Tasks 4092, 4093, 4094, 4095

Manuscript submitted October 21, 1963.

UNCLASSIFIED

THE SULFATE CYCLE FOR CARBON DIOXIDE REMOVAL AND OXYGEN GENERATION

INTRODUCTION

The sulfate cycle system based on the electrolysis of an aqueous solution of sodium sulfate, appears to be a desirable method of solving two of the major problems in submarine habitability, i.e., the production of oxygen and the elimination of carbon dioxide (1). The electrolytic cell produces oxygen and sulfuric acid at the anode, and hydrogen and sodium hydroxide at the cathode. The catholyte or caustic solution is used to absorb carbon dioxide from the atmosphere in the submarine. The partly carbonated sodium hydroxide is then neutralized by the anolyte or acid solution to release the carbon dioxide. Sodium sulfate is reformed in the neutralization process, to be fed back to the electrolyzer and thus complete the cycle. In such a process, hydrogen and carbon dioxide would be pumped overboard, and only de-ionized water and electric power would be required for continuous operation over prolonged periods of time.

Reactions of the cycle have been given (2) and are repeated herewith:

In the Electrolyzer

a. At the anode:

$$2SO_4^{--} + 2H_2O = 2H_2SO_4 + O_2 + 4e^- \tag{1}$$

b. At the cathode:

$$4Na^+ + 4H_2O + 4e^- = 4NaOH + 2H_2 \tag{2}$$

In the CO_2 Absorber

$$2NaOH + CO_2 = Na_2CO_3 + H_2O \tag{3}$$

In the CO_2 Desorber

$$Na_2CO_3 + H_2SO_4 = CO_2 + Na_2SO_4 + H_2O \tag{4}$$

$$2NaOH + H_2SO_4 = Na_2SO_4 + 2H_2O \tag{5}$$

The sum of the anode reaction, Eq. (1), and the cathode reaction, Eq. (2), gives the overall electrolyzer reaction

$$4Na^+ + 2SO_4^{--} + 6H_2O = 2H_2SO_4 + 4NaOH + 2H_2 + O_2 \tag{6}$$

The sum of Eq. (3), the reaction in the CO_2 absorber, and Eqs. (4) and (5) representing the reactions in the CO_2 desorber, yields

$$4NaOH + 2H_2SO_4 = 2Na_2SO_4 + 4H_2O \tag{7}$$

The overall electrochemical Eq. (8) is the sum of Eqs. (6) and (7)

$$2H_2O = 2H_2 + O_2 \tag{8}$$

In the equations above, "e^-" represents the passage of one faraday of current, 96,500 coulombs. Equations (1) and (2) show that in the passage of four faradays, one gram mole of oxygen and four gram moles of sodium hydroxide are formed. Equation (3), however, shows that only half the sodium hydroxide formed is required to absorb one mole of carbon dioxide. Under normal conditions a man exhales 0.85 cubic foot of carbon dioxide per cubic foot of oxygen consumed. If theoretical yields of caustic are obtained, only 42.5 percent of the sodium hydroxide would need to be converted to sodium carbonate in the absorber. However, in practice, the current efficiency for sodium hydroxide may be about 85 percent so that the percentage conversion of hydroxide to carbonate would still be about 50 percent. Although the efficiency of carbon dioxide absorption with sodium hydroxide solutions decreases with increasing carbonate concentrations, a 50-percent carbonate solution is still highly efficient.

The three major components of the sulfate cycle, the electrolyzer, the carbon dioxide absorber, and the neutralizer have each been investigated and found satisfactory at this laboratory (2,3). This led to plans for interconnecting these components and operating them as a unit (4) as shown in Fig. 1. It was believed that combined operation was necessary to reveal any adverse conditions which might occur during prolonged integrated operation. Although all of the components are described in previous reports (2,3,5), some of the electrolyzer details are repeated in this report.

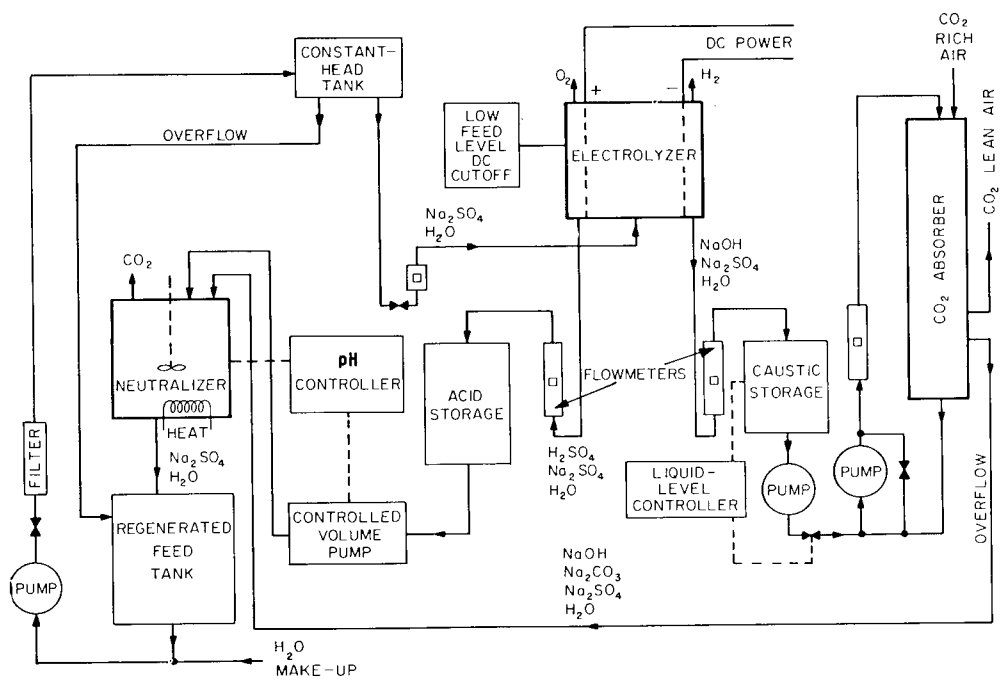

Fig. 1 - Laboratory sodium sulfate cycle plant

During operation in the laboratory the plant was not required to maintain a sealed atmosphere, and the absorber and neutralizer were not on a comparable scale to each other or to the electrolyzer. It was believed that this would not detract from a feasibility study of the cycle since the concentrations and functions of the fluids would simulate on a small scale the nature and behavior of the fluids used in a cycle with a sealed atmosphere.

ELECTROLYSIS

Run number designations refer to runs when the electrolytic cell was operated by itself. The initials J.O. for joint operation are used for those runs in which the electrolyzer, absorber, and neutralizer were operated together for any fraction of the time. A classification of electrolyzer components is given in Table 1.

Table 1

Cell Components	Materials Used in Electrolyzer						
	Runs 6, 9	Run 14 J.O. 1 and 2	J.O. 3 to 12	J.O. 13 and 14	J.O. 15 to 17	J.O. 19	J.O. 20
Cathode Diaphragm	Asbestos Three 20-mil Sheets	Asbestos Two 20-mil Sheets	Asbestos Two 20-mil Sheets	Microporous Rubber One 49-mil Sheet	Microporous Rubber Two 49-mil Sheets	Microporous Rubber* Two 49-mil Sheets	Microporous Rubber† One 49-mil Sheet
Anode Diaphragm	Asbestos Three 20-mil Sheets	Asbestos Two 20-mil Sheets	Asbestos Two 25-mil Sheets	Microporous Rubber One 49-mil Sheet	Microporous Rubber Two 49-mil Sheets	Microporous Rubber* Two 49-mil Sheets	Microporous Rubber† One 49-mil Sheet
Additional Anode Material	-	Dacron Monofilament Cloth 18 mils	Dacron Spun Fiber Cloth 18 mils	-	-	-	-
Blanking Material Lower Half of Anode and Cathode	Polyethylene‡ 6 mils	Polyethylene 6 mils	Polyethylene 6 mils	-	-	-	-
Diaphragm Support	-	-	-	-	Lucite Restrainer used in J.O. 17	Lucite Restrainer with one Pvc Sheet	-

*Includes one silica-free sheet located adjacent to electrode.

†Impregnated with micronized carbon.

‡Used in Run 9.

Design of the Electrolyzer

A vertical cross section of the electrolytic cell is shown in Fig. 2. The anodes were made of a lead-silver alloy containing one-percent silver while the cathodes were iron with a copper flash plated with silver. Anode corrosion, which was caused by the loss of lead peroxide formed during electrolysis, was to be suppressed by the lead-silver alloy provided that the cell temperature would not exceed 50°C (6,7). The silver plate, however, was to protect the cathodes from corrosion during open circuit periods. When applied properly, the plating was effective. The slotted cathodes, however, could not be plated as well as the flat, unbroken areas of the compartment backs. Consequently, in J.O. 13, these cathodes were replaced by others made from sterling silver. Sterling silver screws were also used at this time to fasten the cathodes to the compartment backs which still had silver plating. The open area of the perforations was 29% in the cathode and 25% in the anode. Both of these areas were compared with a usable electrode area, determined by the gasket opening, measuring 3-7/8 inches in width and 19-1/2 inches in height. The original feed frames were made of 1/2-inch Monel with a protective coating of a vinyl lacquer on the surfaces exposed to the feed solution. However, acrylic-resin feed frames, also 1/2 inch in thickness, were used after J.O. 11. Besides being corrosion resistant, the Lucite had the advantage of being a transparent insulator.

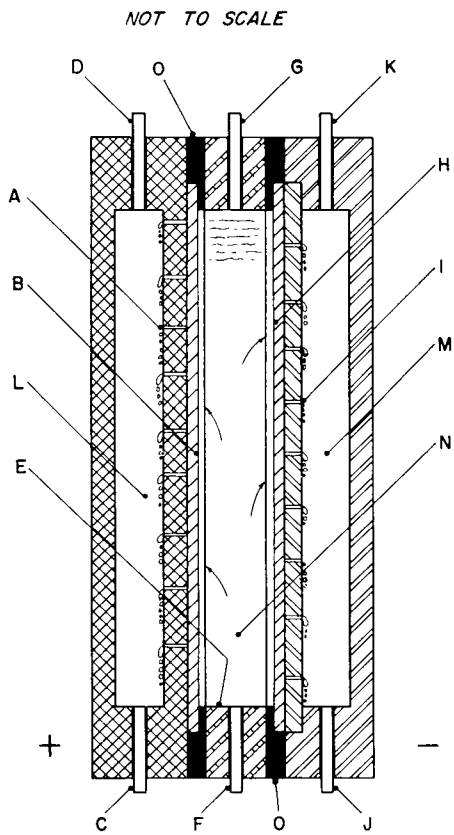

A. Anode, perforated
B. Anode diaphragm
C. Anolyte drain pipe
D. Anodic gas outlet
E. Feed frame
F. Feed inlet pipe
G. Feed outlet pipe, also air vent
H. Cathode diaphragm
I. Cathode, perforated
J. Catholyte drain pipe
K. Cathodic gas outlet
L. Anode compartment
M. Cathode compartment
N. Feed frame space
O. Gaskets of "neoprene"

Fig. 2 - Cross section of electrolyzer

Three such cells, for most of the runs, were assembled in series between bolted end frames. The cells were similar to the smaller cells of previous workers (7,8) in that they all used flat perforated electrodes. This cell was designed to collect hydrogen and oxygen and was a taller cell than had been used previously (7,8). The electrodes are each covered with porous diaphragms which form three separate compartments sealed from each other by gaskets. The feed solution enters the central or feed compartment, percolates through the diaphragms and electrode perforations, and drains freely down the catholyte and anolyte compartments. Thus, the electrodes themselves are not submerged, but are wet by the seeping electrolyte. The liquid products are removed as quickly as possible to decrease undesirable ion migration such as back diffusion of hydroxide ions toward the anode. Separation of any acid or caustic spray in the gaseous products is accomplished by adding a small volume of packing in the gas outlet tubes. Traps sealed with anolyte or catholyte prevent the loss of either oxygen or hydrogen through the liquid drain pipes.

Operation of the Electrolyzer

The rate of percolation or flow rate through the diaphragms depends on the porosity and thickness of the diaphragms, and the temperature and hydrostatic pressure of the feed solution. To alter the percolation rate, it is convenient to vary the hydrostatic pressure of the feed solution. This adjustment of hydrostatic pressure at constant current conditions provides some control over the normalities of the catholyte and anolyte. Variation of current at constant flow conditions to control the concentrations of acid and base, however, is not desirable since this would, obviously, affect the oxygen output.

Since the conversion of sodium sulfate to both acid or base is only partial, the anolyte and catholyte will contain some sodium sulfate. The catholyte composition, obviously, is important in its influence on absorber efficiency. Unless the catholyte contains at least 1N NaOH, operation of the absorber might be seriously impaired. However, a 2N NaOH solution is preferred since the absorption efficiency would be increased, both because of the higher concentration of hydroxide ion and the consequent decrease of sodium sulfate in the catholyte.

Although the normality of the catholyte may be increased by reducing the hydrostatic pressure of the feed solution, such reduction is limited by the necessity of keeping the diaphragms in close contact with the electrodes. Because the diaphragm is confined at the edges by a gasket and is usually unsupported in the feed-frame space, small gas pressures are sufficient to rupture diaphragms if the hydrostatic pressure is reduced excessively. Maintenance of a minimum hydrostatic pressure is also required with stronger materials since a slight separation of diaphragm and electrode can affect the operation of the cell. For further security against diaphragm rupture or separation from an electrode, a low feed level dc cutoff switch was installed to interrupt current during electrolysis.

The usual method of feeding the electrolytic cell was by a gravity system with the feed solution entering at the bottom of the feed frame. At the top of the feed frame, the feed outlet tube was long enough to contain the feed solution at the desired hydrostatic pressure and act as a gas vent for any gases released from the hot feed solution. At times, an overflow pipe, which was adjustable for height, was added to the feed outlet to provide some temperature control of the cell with the cooling effect obtained in allowing a flow of feed solution in excess of the flow through the diaphragms.

In a pressurized system used very briefly, the feed outlet tube was closed and provisions were made for bleeding off any gas accumulation. One disadvantage of this system was that any sudden drainage, such as an accidental break in the feed line, would produce a vacuum in the feed-frame space which could rupture the diaphragms unless additional safeguards such as vacuum breakers or check valves were provided.

OPERATIONS WITH ASBESTOS DIAPHRAGMS

Operating Conditions

It is interesting to compare the results of Run 9 (Table 2) with those made by Atwell and Fuwa (8) under similar conditions in their electrolyzer using a 22 percent solution of

Table 2
Electrolysis of Aqueous 18 Wt-% Sodium Sulfate Solutions with Asbestos Diaphragms

Run No.	Operating Time (min)	Current Density (amp/sq ft)	Cell Voltage (Volts)	Mean Feed Pressure on Diaphragms (inches)	H_2SO_4 Normality	NaOH Normality	Current Efficiencies (percent)			
							O_2	H_2	H_2SO_4	NaOH
6	172	100	4.9	20	1.18	1.56	97.8	91.4	81.7	85.3
9	252	106	5.4	21.4	1.0	1.76	99	97.8	81.0	81.7
14	98	103	5.7	9	0.67	1.19	91	100	88.7	74
J.O. 3	300	96	4.7	11.9	0.75	1.07	92	96	-	-
J.O. 4	210	88	4.8	12.3	0.65	1.21	87.2	100	87.2	78
J.O. 5	480	86	4.8	13.9	0.58	1.45	96	100	84	100
J.O. 9	180	93	5.4	19.5	0.67	1.51	89	96	85	100
J.O. 10	1440	86	5.4	22.2	0.55-0.67	1.39-1.43	92	100	78	99

sodium sulfate and J-M "High Grade" white asbestos paper diaphragms. Their operating voltage was 5.1 volts per cell at a current density of 110 amp/sq ft, with 0.7 inch between the electrodes, and at a cell temperature between 80° and 90°C. At NRL, with the distance between electrodes at 0.75 inch and a maximum cell temperature of 70°C, the cell voltage of 5.4 volts was very close to that of Atwell and Fuwa, although the electrolyte was only 18 percent sodium sulfate in water. The NRL electrolyzer has been operated intermittently as would be the case in its intended service, at an ambient temperature of 26° to 27°C. At this temperature a 22 percent solution of sodium sulfate would crystallize out when cooling after shutdown, while an 18 percent solution would remain in solution.

In joint operation, the temperature of the electrolyzer was limited from 40° to 50°C to reduce the rate of attack on the electrodes and asbestos at the anodes.

Data and results from the operation of the electrolyzer itself in Runs 6, 9, and 14 are given in Table 2. With 60-mil-thick cathode diaphragms in Run 6 and a low enough feed rate to produce 1.7N NaOH, it was found that the height of the feed level above the top of the diaphragms was insufficient to keep the diaphragms in contact with the electrodes. However, by blanking off the bottom half of all six electrodes with polyethylene sheets, it was possible to increase the height of the feed level above the top of the diaphragms, and at the same time reduce the total flow through the diaphragms.

Joint operations were marred by the diaphragm and corrosion problems. As a result, the longest time of service for a set of asbestos diaphragms was 70 hours, with one continuous run for 24 hours in J.O. 10. The anode diaphragms at this time had very little service life remaining as shown by their weakened condition along the edges. Diaphragm problems were also compounded by metallic corrosion, chiefly in the electrolyzer. These corrosion products reduced diaphragm porosity, and added to the stress imposed on the asbestos by requiring higher hydrostatic feed pressures to maintain the desired flow rates.

Although the decline in porosity of the diaphragms was controlled to a certain extent in J.O. 9 and 10 by the use of purifying flasks which removed some of the impurities, further tests in J.O. 11 and 12 revealed a definite continuation of plugging.

Intermediate Protective Material

In Run 14 and in J.O. 1 and 2 the electrolyzer was operated with the addition of monofilament Dacron. This polyester cloth, about 18 mils in thickness, was placed between the anode and asbestos to allow easier release of oxygen. At the same time, since Dacron has been used successfully in acid electrolytes as anode plating bags, it was hoped the cloth would provide some protection for the asbestos. However, a new diaphragm problem was encountered after seven hours of service. One of the anode diaphragms was cut along the rim where the asbestos was confined between the neoprene gasket and lead anode. This rim-cut occurred in the upper half of the cell. The asbestos in the lower half of the cell remained unaffected because this area was inactivated by the placement of polyethylene sheet against the lead.

In J.O. 3 to 12, spun-fiber Dacron, also 18 mils in thickness, was substituted for the monofilament cloth to determine if rim-cut might be eliminated by a softer cloth. Since rim-cut did not occur in J.O. 3 to 10, it appeared that the use of soft cloth was satisfactory. However, corrosion, which resulted in failure of a Monel vent tube in one of the feed frames, made it necessary to disassemble the electrolyzer after J.O. 10. Examination of the anode diaphragms revealed conditions which eventually would lead to rim-cut, since the asbestos under the gasket in the upper half of the cell was powdery and weak in comparison with asbestos in other areas of the anode diaphragms.

In J.O. 11 and 12, the polyethylene blank was extended upward and a 4 by 10 inch rectangle was cut out of its upper half. The plastic under the gasket then became a continuous buffer between the anode and the Dacron, but it still did not prevent damage to the asbestos. In J.O. 12, new asbestos diaphragms were used with the new Lucite feed frames. After five hours of service, the cell was dismantled. In this case that portion of the asbestos in the anode diaphragm confined by the gasket had a translucent appearance which was an indication of imminent failure. The use of Dacron cloth or other intermediate material at the anode thus seemed to hasten diaphragm failure by intensifying chemical attack on the asbestos confined by the gasket. In addition, very little protection was provided to the remainder of the anode diaphragm since the asbestos shredded off at about the same rate whether Dacron was present or not.

The use of Dacron resulted in an increase of feed flow through the adjoining diaphragm. With the combination of Dacron and a 50-mil thickness of asbestos, for example, the flow at a given hydrostatic pressure and liquid temperature was twice the flow through a 40-mil thickness of asbestos by itself. Consequently, in J.O. 3 to 10, concentrations of 0.5N to 0.8N H_2SO and 1.2N to 1.5N NaOH were produced. The use of protective material resulted in the theory that separation of a diaphragm from an electrode would increase the liquid flow through the diaphragm by increasing the open area normally restricted to that portion of the diaphragm covering the electrode perforations.

The asbestos used as a cathode diaphragm remained in good condition, although it was still subject to shredding but not as severely as on the anodic side. Rim-cut did not take place because asbestos is chemically resistant to the alkali.

Corrosion

Corrosion products had a direct influence on the operation of the electrolyzer. Most of these impurities would pass through the filter protecting the electrolyzer by dissolving in the relatively acid solution produced by neutralization. The pH of this solution would, obviously, be under 7 as long as it contained some carbon dioxide. The solution in the feed frame of the electrolyzer, however, was surprisingly alkaline (pH 11.5 to 12.0) in J.O. 3 to 10, presumably because of an abnormally high back diffusion rate of the hydroxyl ion induced by the 2 to 1 ratio of anolyte to catholyte flow rates. The soluble impurities were then able to precipitate as hydroxides, carbonates, and perhaps oxides. The combination of these precipitates with loose asbestos fibers produced a volume of sludge almost sufficient to fill the entire feed frame space in the active area leaving only a channel for the flow of fresh feed. As a result, the data (Table 2) show the following trends: (a) a gradually increasing hydrostatic pressure to maintain the desired flow rates through the diaphragms, and (b) gradually increasing cell voltages to overcome the increase in ohmic resistance of the coated diaphragms. With a current density of 86 amp/sq ft in both J.O. 5 and J.O. 10, 1.4N NaOH solution was produced in both runs, although the mean feed pressure in inches of solution had increased with time from 13.9 in J.O. 5 to 22.2 in J.O. 10. In the same interval, the cell voltages also increased from 4.8 to 5.4 volts.

Most of the corrosion products came from the Monel feed frames which were attacked when their protective coating deteriorated. The Monel feed frames were therefore replaced by others made from an acrylic resin. Another source of difficulty was the silver plating on the iron cathodes. The numerous sharp edges and interior surfaces could not be plated without some flaws, and any exposure of iron in the presence of relatively large areas of silver would accelerate the corrosion of iron. This was corrected by using sterling silver cathodes. These changes, after J.O. 11, proved to be effective. If, in addition, the cell's liquid products were discarded for the first hour or so to remove metallic impurities leached out of the asbestos, the corrosion problem was practically eliminated.

OPERATIONS WITH MICROPOROUS RUBBER DIAPHRAGMS

Diaphragm Research Group

Early recognition of the need for a more intensive study of the diaphragm problem led to research by a group at this Laboratory (9, 10). This group recommended microporous rubber diaphragms for both anode and cathode service as a result of tests in miniature electrolytic cells with an active diaphragm area of 3 × 3 inches (10). Several continuous runs of 125 days were obtained under these conditions: (a) two sheets of the rubber were used as anode and cathode diaphragms, (b) the feed was a continually fresh solution as the acid and alkali cell products were discarded rather than mixed and re-used, and (c) a current density of 50 amp/sq ft was used which produced 0.5N to 0.7N NaOH at the percolation rates provided. The current density was limited to this value in order to keep the cell temperature under 50°C.

Porosity Problems

In J.O. 13 and 14, a single sheet of microporous rubber was used on all electrodes. There were no electrical difficulties in these two runs, but the catholyte flow was unstable. In less than 400 minutes of electrolysis the catholyte flow increased until it was three or four times as rapid as the relatively stable anolyte flow. When the anolyte diaphragm of J.O. 13 became a catholyte diaphragm in J.O. 14, it also lost its flow stability with a rapid increase in flow.

Two sheets of the rubber diaphragms were then placed on all electrodes. Higher caustic normalities were thus obtained initially, but again the increase in catholyte flow rates soon reduced the normality of the caustic to about a third of the acid normality.

During these runs it became obvious that the silica content of the regenerated feed solution had increased greatly. The source of the silica was found to be in the microporous rubber in which silica gel had been introduced by the manufacturer as a pore former. As a result of this leaching action, the porosity of the cathode diaphragm quickly increased, but the anode diaphragm showed little change. Subsequent tests (9) have shown that a hot 2N NaOH solution is an efficient leaching agent for silica.

Catholyte flow instability was unexpected in view of the miniature cell tests which showed a very gradual increase in flow for both diaphragms. While the shape of the plant electrolyzer (tall and narrow) may have contributed to the problem by introducing sizable variations in pressure and flow over the length of the diaphragm, other considerations such as catholyte normality are probably more significant.

To obtain stable cathode diaphragms, the microporous rubber was leached with 2N NaOH at 70°C for at least four hours to remove all accessible silica. Anode diaphragms were also subjected to this treatment to obtain matched sets. The change in porosity, however, was much greater than expected. In a preliminary run without power and using distilled water as a feed solution, the anolyte and catholyte flow rates were 440 and 460 cc/min respectively with two sheets of the preleached microporous rubber on all electrodes. Under similar conditions using a sodium sulfate solution and fresh or unleached diaphragms, the flow rate would be about 35 cc/min. Water at room temperature can be used as a substitute for sulfate solutions to gain a quick approximation of flow rates, since the decrease in flow due to the higher viscosity of sulfate solutions is offset by an increase in flow at the higher operating temperatures in electrolysis. The flow rates were obtained at a mean hydrostatic pressure of 31 inches over an area of about 227 square inches for three diaphragms. It was calculated that a run under these conditions at a current density of 50 amp/sq ft with the preleached rubber would result in caustic and acid normalities of only 0.1.

To improve this situation, the following changes were made during J.O. 18: the bottom half of all diaphragms was blanked off with polyethylene, a pair of leached and unleached sheets of microporous rubber was placed on the anode, and four sheets of 25-mil asbestos were substituted for the rubber as a cathode diaphragm. This thickness of asbestos was greater than calculated, but it was necessary to fill in the 100-mil step of the gasket so that a perforated Lucite sheet could keep the asbestos from shredding. The desired flow rates were obtained by this arrangement, but the electrical resistance of such a cell was much too high and permitted the passage of only one ampere of current.

In the next trial, one 49-mil sheet of preleached rubber was substituted for two sheets of asbestos. The microporous rubber placed on the feed-frame side could now support the remaining two sheets of asbestos, thus eliminating the need for the Lucite sheet. In this case the voltage per cell was about 9 volts or much higher than usual.

Because the combination of leached and unleached rubber was working well on the anode, it was decided to try the same arrangement on the cathode. It was hoped the preleached rubber against the cathode would prevent, or at least decrease, the leaching rate of silica from the fresh rubber sheet. This hope was partly realized under continuous operation in J.O. 19 as the catholyte flow in the cell with normal ohmic resistance was stable over 31 hours of continuous operation. In intermittent runs the porosity of the inner flow control sheet could be ruined by diffusion of caustic unless care was taken to remove most of the caustic from the cathode compartments after turning off the power.

Electrical Problems

Another problem soon appeared with the use of two sheets of rubber. In comparison to the experience gained in using microporous rubber in the miniature cells, the rubber in the plant cell was susceptible to swelling. The swelling seemed to be the result of gas entrapment between sheets so that one sheet would bulge or bow into the feed frame space while the other sheet remained flat against the electrode. Gas entrapment is possible because a sheet of microporous rubber when wet will not permit the passage of gases below a pressure of 200 inches of water (11). The gases would probably be dissolved carbon dioxide and air that remained in solution in passing through the first sheet, but were released forming a gas pocket that could not pass through the other sheet. Although the swelling was more apt to develop on the cathode side, it was also seen on the anode. The bulging occurred with electrolyzer temperatures below 50° C and the probability of bulging seemed to increase with higher temperatures and lower hydrostatic pressures. Pressures of 45 to 100 inches above the top of the diaphragm did not prevent swelling and the rubber, once deformed, took a permanent set.

Bulging,* if not seen, can be detected by an increase in cell potential without a corresponding increase in current, and by a decrease in the percolation rate caused by the discontinuity in fluid flow. Ohmic resistance was higher because a smaller portion of the electrode was wet and active.

In J.O. 17, Lucite spacers or restrainers were placed in all of the feed frames to prevent swelling. Each spacer assembly consisted of eight rectangles perpendicular to the diaphragms with the thin beveled edges bearing against the rubber on either side. These rectangles were mounted in a staggered fashion on two plastic rods to permit flow through the feed frames.

*Bulging of the asbestos diaphragm was observed during J.O. 12. Cell voltages and flow rates were not affected since only a small area was involved for about one hour, a relatively short time. The bulge, however, deflated spontaneously and released gas bubbles into the feed-frame space.

The results were not satisfactory with cell voltages still unequal and higher than normal. Examination of the diaphragms after disassembly revealed only one location with a light imprint of a contact mark from the spacers. The spacers therefore did not confine the diaphragms as intended. Since the tolerance requirements for the width of the spacers were difficult to determine, they were considered impractical.

Acquisition of thin sheets of corrugated and perforated polyvinylchloride (PVC) material which had been used as battery separators, brought about a renewal of interest in the Lucite spacers of J.O. 17. It was found that one sheet of the PVC material used with the spacers firmly wedged the diaphragms into place every two inches of their height for about 80% of their width at these locations. Cathode diaphragms supported in this manner did not bulge in 800 minutes of intermittent operation during which the anode diaphragms consisted of single sheets. This cell assembly with another sheet of rubber added to the anode diaphragm was then used in J.O. 19. This run, a two cell operation, had the cell voltages differ 0.25 volt from each other for the first three hours. Then, as the diaphragms in one cell bulged between the Lucite support strips, its cell voltage increased until it was 7.7 volts in excess of the voltage required for the other cell. If power had not been cut off, the bulged diaphragms would have cracked shortly as subsequent examination revealed incipient fissures at the support locations. Most of the bulging, as usual, occurred in the upper half of the cell.

After disassembly, the good cell was restored to service within a few hours. With an initial pressure of 100 inches, this cell failed at the start when its diaphragm quickly bulged.

Micronized Carbon Impregnant

In achieving the desired solution flow rates, it was necessary to use multiple sheets. Unfortunately, this increased the probability of bulging. A solution to this problem was then proposed with the use of single sheets of microporous rubber as anode and cathode diaphragms to eliminate the swelling effect. The required flow rate through both diaphragms was to be obtained by using the preleached sheets and reducing their porosity by the controlled addition of micronized carbon. This was accomplished in the assembled cell by feeding a water suspension of the carbon into the feed frame and filtering out the carbon. While some of the carbon was undoubtedly forced into the pores of the rubber, the desired flow rate could only be obtained with a substantial coating of carbon on the rubber surfaces. Obviously, such a method could only be a laboratory expedient.

In preliminary trials, this assembly operated successfully in three 2-hour runs. At a current density of 89 amp/sq ft, the voltage across a cell was 5.5 volts, and with a catholyte flow rate of about 45 cc/min, the caustic normality was 0.67.

Preparations for a fourth run, however, revealed that the carbon coating had collapsed and the diaphragms were free flowing again, with flow rates almost back to the values before the plugging operation. Although this coating was replaced, it did not duplicate the first application with regard to either flow rates or voltage. The catholyte flow rate at approximately the same conditions was now about 83 cc/min. At a current density of 97 amp/sq ft, the voltage across a cell was now 6.7 and the caustic normality was 0.40.

J.O. 20 was halted when the flow rate suddenly increased to 200 cc/min as the carbon again failed to keep the diaphragms plugged. When power was switched off, however, the two cells were still operating satisfactorily from an electrical viewpoint. The cell voltages were stable and practically identical, within 0.15 volt, throughout the run.

UNCLASSIFIED

CURRENT EFFICIENCIES

In J.O. 3 to 10, current efficiencies for sodium hydroxide were calculated to be very close to 100 percent, while anode efficiencies for sulfuric acid averaged 85 percent as shown in Table 2. Anode and cathode efficiencies for the acid and alkali in numerous runs before joint operation were very nearly equal at about 85 percent. The unusually high efficiencies for sodium hydroxide are undoubtedly in error because of difficulties in reading a rotameter under pulsating flow conditions.

When asbestos diaphragms were used, the current efficiency for oxygen averaged 91 percent in joint operations as compared with an average of 96 percent in solo operation of the electrolyzer. Theoretical considerations indicate that the presence of carbon dioxide, or ions formed from it, could not have caused this difference, and this can be confirmed in Table 3 which shows that current efficiencies for oxygen in joint operations with microporous rubber diaphragms in the cell were also about 96 percent. The low values were caused mostly by loss of oxygen through leakage during J.O. 3 to 10. There were at least two repairs on the lead anodes which resealed small holes before the anodes were used with microporous rubber diaphragms. A change in calibration of the wet test gas meters also became apparent when the volume ratio of oxygen to hydrogen with both gases at standard conditions did not exceed 0.45 during J.O. 3 to 10.

Table 3
Electrolysis of Aqueous 18 Wt-% Sodium Sulfate Solutions
With Microporous Rubber Diaphragms

Run No.	Operating Time (Min)	Current Density (Amp/sq ft)	Cell Voltage (Volts)	Current Efficiency (Percent)		H_2SO_4 Normality	NaOH Normality
				O_2	H_2		
J.O. 13	400	89	5.0	96	94	1.68	0.54
J.O. 15	100	55	4.9	95	97	0.7	1.0-1.1
J.O. 17	322	73	5.7	93	95	2.0	0.73
J.O. 19	1870*	68	5.9	97	99	1.00	0.95
J.O. 20	2280†	94	6.7	98	100	0.37	0.40

*Includes 1530 minutes of feed regeneration.
†Includes 1330 minutes of feed regeneration.

OXYGEN PURITY

Oxygen generated in the NRL cell had a purity of 99 percent or better as shown by Pauling Meter readings throughout all of the runs. A few analyses during joint operation have shown the CO_2 content of the electrolytic O_2 to be about 0.1 to 0.3 percent. (The O_2 content of the hydrogen from the cathode was always less than 0.1 percent.)

Ozone was also present, but its concentration was not determined. Stender and Seerak (7) found the ozone content of the anode gas to increase with current density. They reported a little less than 3 percent of the anode gas to be ozone at a current density of 75 amp/sq ft and an electrolyte temperature of 50° to 60°C although this percentage was reduced to 0.69 percent at 60 amp/sq ft. Most of the ozone generated in the NRL cell, however, was decomposed in its passage through a wet test gas meter. In submarines, carbon beds and the CO/H_2 burner would help in eliminating ozone, but the most effective method of ozone control might be the addition of the ozone-enriched oxygen to the air stream passing through the absorber, since sodium hydroxide acts as a catalyst in decomposing ozone.

POWER REQUIREMENTS

Power required to generate one cubic foot of oxygen at standard conditions was 0.75 kw-hr in Run 9 with asbestos, as well as in J.O. 13 with microporous rubber. It is believed, however, that this power requirement could be reduced by changes in cell construction and operation. Platinum black on platinized titanium would be an effective anode (12) which could reduce cell resistance by allowing the use of temperatures higher than 50°C. In addition, the distance between electrodes could probably be decreased without a significant increase in back diffusion of catholyte or anolyte ions particularly if diaphragms other than asbestos were used.

CARBON DIOXIDE ABSORPTION

The rate of absorption of CO_2 by sodium hydroxide solutions is reduced by the presence of sodium sulfate. In a comparison of absorption rates by two solutions, each containing 1N NaOH, the one without sulfate is twice as effective in removing CO_2 as one containing 16 percent Na_2SO_4 (3). The sodium hydroxide solution in the sulfate cycle is normally operated with half of the hydroxyl ions converted to carbonate ions. This also decreases CO_2 removal efficiency because sodium hydroxide is superior to sodium carbonate as a CO_2 absorbent. Fortunately, operation of the absorber in a concurrent manner permits the use of high liquid and gas rates as compared to countercurrent operation and results in mass transfer coefficients which indicate that the size of the absorber would be reasonable.

The concentration of sodium hydroxide in the sulfate cycle is important in two respects. Higher concentrations of hydroxyl ion improve absorber efficiency, although 2N NaOH may be the optimum absorbent. Any increase in caustic normality is also beneficial in that it automatically decreases the Na_2SO_4 content if the feed solution to the cell remains at a fixed concentration. Table 4 indicates that an absorbent solution containing higher concentrations of hydroxide ion and less Na_2SO_4 is much more responsive to changes in the liquid rate in the lower range of liquid rates shown. Calculations with certain assumptions show that if the feed solution to the cell were 18 percent Na_2SO_4, the catholyte solution with 1N NaOH would contain about 15 percent Na_2SO_4; with 2N NaOH, about 12 percent Na_2SO_4.

Table 4
Effect of Sodium Hydroxide and Sulfate Content on CO_2 Absorption Rate

Factor	1.1N NaOH 16 Wt-Percent Na_2SO_4			2.0N NaOH 10.9 Wt-Percent Na_2SO_4	
Liquid Rate (LB/HR/FT^2)	5300	6700	11900	4530	6200
Percent CO_2, Effluent Air	0.73	0.69	0.61	0.67	0.58
CO_2 Removal (LB/HR)	0.43	0.46	0.59	0.45	0.61
K_Ga (Lb Moles CO_2/HR/FT^3/ATM)	1.9	2.1	2.8	2.1	3.0

Most of the absorber data were collected around 27°C. During one of the joint operations, however, an external heat supply raised the absorber operating temperature to 49°C. There appeared to be an increase in CO_2 removal efficiency, but the results could not be considered conclusive. Although caustic solutions without sulfate absorb CO_2 better at higher temperatures, the greatly reduced solubility of CO_2 in sodium sulfate solution at higher temperatures might nullify any gain.

In the short time of service in joint operations, no trend was observed which could lead to difficulties in either absorption or neutralization. The unusual corrosion encountered in J.O. 3 to 10 could cause an accumulation of impurities on the packing of the absorber which, in time, would necessitate an absorber shutdown for cleaning. However this severe corrosion in the electrolyzer has been practically eliminated and corrosion in the type 304 stainless steel of the absorber piping has been negligible except for a few weld locations. The Carpenter type 20 steel in the neutralizer remained corrosion free.

The absorption of CO_2 was roughly matched to the oxygen output of the electrolyzer by adjustments of air flow and concentration of carbon dioxide in the input air. The conversion of hydroxide to carbonate was usually about 52 percent.

NEUTRALIZATION OF CATHOLYTE AND ANOLYTE

Batch tests (13) have shown that even at the relatively low temperature of 32°C, vigorous agitation at a pH of about 4 will quickly liberate CO_2 from carbonated catholyte solutions neutralized by the anolyte. If the pH of the combined solutions is allowed to increase to 6, about 15 percent of the accessible CO_2 will be retained as the bicarbonate ion, and the time of evolution of a given volume of CO_2 will be increased severalfold. At a pH of 7 or above, the evolution of CO_2 will cease entirely.

For an 18 percent solution of sodium sulfate at atmospheric pressure, the amount of dissolved CO_2 will be a function of the solution temperature. This can be calculated by the Secenow equation (14)

$$N_s = N_o e^{-KC}$$

Here N_s is the solubility of CO_2, expressed as a mole fraction, in a solution with a molar concentration, C, of sodium sulfate; N_o is the solubility of CO_2, also as a mole fraction, in water at the same temperature, and K is a constant which depends on the nature of the electrolyte and the temperature. The value of K for aqueous sodium sulfate solutions increases from 0.65 at 25°C to 1.53 at 75°C. At 60°C and a K value of 1.07, the Bunsen coefficient for CO_2 in 18 percent Na_2SO_4 was calculated to be 0.074. The Bunsen coefficient may be defined as the volume of gas in milliliters at standard conditions dissolved in one milliliter of the solvent at the given temperature when the partial pressure of the dry gas is 760 mm.

The operating temperature for the neutralizer should therefore be slightly below the boiling point to reduce to a minimum the amount of dissolved CO_2, to minimize neutralizer size by increasing the rates of reaction and gas separation, and to avoid condensing appreciable amounts of water as would be the case if boiling were used.

In joint operations the neutralizer had a uniform formation of CO_2 bubbles throughout the vessel without any indication of foam. In J.O. 10, the average rate of desorption of CO_2 was 13 liters/hr rather than the theoretical rate of 11.9 liters/hr associated with an oxygen output of 14 liters/hr. This occurred because precise absorption control (not a particularly important requirement) was hindered by the variable flow rates of fresh caustic pumped to the absorber. In the same run, the CO_2 entering the regenerated feed tank as a dissolved gas was calculated to be 0.4 liter/hr. Because a sealed atmosphere was not maintained in the laboratory, the regenerated solution had ample opportunity to release carbon dioxide as its environment changed from virtually 100 percent CO_2 to a normal or low CO_2 atmosphere. As a result the pH of the regenerated solution increased from 4.0 to about 5.8 before it was introduced into the electrolyzer.

CONCLUSIONS AND RECOMMENDATIONS

It is concluded that joint operation of the major components of the sulfate cycle gave results equal to those obtained by separate operation of these components. Current efficiency and voltage have also remained satisfactory for the cell with the substitution of microporous rubber for asbestos diaphragms. At a current density of 100 amp/sq ft, the current efficiency for O_2 should be about 95 percent, about 85 percent for NaOH, and the cell voltage should be 5 volts, or perhaps less if the distance between electrodes is reduced and the cell temperature is increased. The power required to generate one cubic foot of oxygen at standard conditions would then be less than 0.75 kw-hr.

At higher operating temperatures which would increase efficiency, the lead anode should be replaced with either an electrode consisting of platinum black on platinized titanium or other suitable electrode material. Stainless steel, despite its higher electrical resistance, should also be considered as a cathode material in view of its corrosion resistance during and between miniature cell runs.

On the basis of the sulfate cycle plant experience and the 125-day runs with the miniature electrolytic cells, the sulfate cycle system is considered feasible for oxygen generation and carbon dioxide absorption aboard nuclear-powered submarines. It is believed that the major problem anticipated and encountered, finding a suitable diaphragm material, can be solved by using single sheets of microporous rubber, free of leachable silica and of the correct porosity.

ACKNOWLEDGMENT

In an undertaking such as this numerous facilities and services of the laboratory are required. The authors are thankful for the cooperation and assistance of many individuals and shops. Mr. R. C. Clark, in particular, had been very helpful as a member of both the sulfate cycle and diaphragm research groups.

UNCLASSIFIED

REFERENCES

1. "Electrolytic NaOH and Oxygen Generation," Chapter 22 in "Carbon Dioxide Removal from Atmospheric Air in Submarines," Chemical Engineering Laboratory, Northwestern University, Evanston, Ill., preliminary draft (1954)

2. Pitman, A.L., "An Electrolytic Cell for the Production of Oxygen and Sodium Hydroxide," Chapter 18 in "The Present Status of Chemical Research in Atmosphere Purification and Control on Nuclear-Powered Submarines," Miller, R.R., and Piatt, V.R., editors, NRL Report 5465, Apr. 21, 1960

3. Gadomski, S.T., "The Absorption and Removal of Carbon Dioxide in the Alkali (Sodium) Sulfate Process," Chapter 17 in "The Present Status of Chemical Research in Atmosphere Purification and Control on Nuclear-Powered Submarines," Miller, R.R., and Piatt, V.R., editors, NRL Report 5465, Apr. 21, 1960

4. Gadomski, S.T., and Pitman, A.L., "Sulfate Cycle Pilot Plant," Section 3, Chapter 1 in "The Present Status of Chemical Research in Atmosphere Purification and Control on Nuclear-Powered Submarines," Piatt, V.R., and Ramskill, E.A., editors, NRL Report 5630, July 14, 1961

5. Pitman, A.L., and Gadomski, S.T., "Laboratory Scale Operation of the Sulfate Cycle for Carbon Dioxide Removal and Oxygen Generation," NRL Report 5714, Jan. 17, 1962

6. Suchy, R., and Messner, G., U.S. Patent 2,198,045, Apr. 23, 1940

7. Stender, W.W., and Seerak, I.J., Trans. Electrochem. Soc. 68:493-520 (1935)

8. Atwell, H.V., and Fuwa, T.J., Ind. Eng. Chem. 15:617-620 (1923)

9. Young, J.A., "Diaphragm Materials," Section 1, Chapter 1, in "The Present Status of Chemical Research in Atmosphere Purification and Control on Nuclear-Powered Submarines," Piatt, V.R., and Ramskill, E.A., editors, NRL Report 5630, July 14, 1961

10. Young, J.A., Clark, R.C., and Lawrence, K.D., "Diaphragms for the Sulfate-Cycle Electrolytic Cell," Chapter 2 in "The Present Status of Chemical Research in Atmosphere Purification and Control on Nuclear-Powered Submarines," Piatt, V.R., and White, J.C., editors, NRL Report 5814, August 29, 1962

11. Young, J.A., private communication

12. Ionics, Incorporated, "Investigation of an Electrically-Operated System to Generate Oxygen and Absorb Carbon Dioxide," Project Serial Number SFO 13-08-03, Contract NObs 86504, May 28, 1963

13. Gadomski, S.T., "CO_2 Absorption and Desorption," Section 2, Chapter 1, in "The Present Status of Chemical Research in Atmosphere Purification and Control on Nuclear-Powered Submarines," Piatt, V.R., and Ramskill, E.A., editors, NRL Report 5630, July 14, 1961

14. Shchennikova, M.K., Devyatykh, G.G., and Korshunov, I.A., J. Applied Chem. U.S.S.R. 30:1149 (1957)