NRL Report 8592

Range-Doppler-Coupled Moving Target Indicator

B. L. LEWIS, F. F. KRETSCHMER, JR., AND F. C. LIN

Target Characteristics Branch
Radar Division

June 15, 1982

NAVAL RESEARCH LABORATORY
Washington, D.C.

APPROVED FOR PUBLIC RELEASE
DISTRIBUTION UNLIMITED

SECURITY CLASSIFICATION OF THIS PAGE (When Data Entered)

REPORT DOCUMENTATION PAGE		READ INSTRUCTIONS BEFORE COMPLETING FORM
1. REPORT NUMBER NRL Report 8592	2. GOVT ACCESSION NO.	3. RECIPIENT'S CATALOG NUMBER
4. TITLE (and Subtitle) RANGE-DOPPLER-COUPLED MOVING TARGET INDICATOR (U)		5. TYPE OF REPORT & PERIOD COVERED Interim report— Oct 81–Dec 81 6. PERFORMING ORG. REPORT NUMBER
7. AUTHOR(s) B. L. Lewis, F. F. Kretschmer, Jr., and F. C. Lin		8. CONTRACT OR GRANT NUMBER(s)
9. PERFORMING ORGANIZATION NAME AND ADDRESS Naval Research Laboratory Washington, DC 20375		10. PROGRAM ELEMENT, PROJECT, TASK AREA & WORK UNIT NUMBERS 62712N SF12-131-691 53-0605-0-2
11. CONTROLLING OFFICE NAME AND ADDRESS Naval Sea Systems Command Washington, DC 20362		12. REPORT DATE June 15, 1982 13. NUMBER OF PAGES 11
14. MONITORING AGENCY NAME & ADDRESS(if different from Controlling Office)		15. SECURITY CLASS. (of this report) 15a. DECLASSIFICATION/DOWNGRADING SCHEDULE
16. DISTRIBUTION STATEMENT (of this Report)		
17. DISTRIBUTION STATEMENT (of the abstract entered in Block 20, if different from Report) APPROVED FOR PUBLIC RELEASE DISTRIBUTION UNLIMITED		
18. SUPPLEMENTARY NOTES		
19. KEY WORDS (Continue on reverse side if necessary and identify by block number) Radar Sonar Signal processing Moving target indicator		

20. ABSTRACT (Continue on reverse side if necessary and identify by block number)

A new MTI technique is introduced that takes advantage of range-doppler-coupling in frequency modulation or frequency-modulation-derived-phase-coded pulse expander-compressors to eliminate doppler ambiguities or blind speeds. It is demonstrated that such an MTI can be implemented in either coherent or noncoherent form without losing desired targets in the absence of clutter. In the noncoherent form, the true range and velocity of a moving target can be estimated from the MTI output. The clutter cancellation and target enhancement characteristics of this MTI are discussed in the report.

DD FORM 1 JAN 73 1473 EDITION OF 1 NOV 65 IS OBSOLETE
S/N 0102-014-6601

SECURITY CLASSIFICATION OF THIS PAGE (When Data Entered)

CONTENTS

INTRODUCTION 1

RANGE-DOPPLER-COUPLED MTI 1

NONCOHERENT MTI 2

COHERENT MTI 4

CLUTTER CANCELLATION, TWO-PULSE MTI 5

Coherent MTI Cancellation Ratio 6
Noncoherent MTI Clutter Cancellation 6

COMPENSATION FOR ANTENNA SCAN MODULATION 7

TARGET ENHANCEMENT FACTOR 7

MTI IMPROVEMENT FACTOR 8

DIFFERENCES BETWEEN THE MTI DISCUSSED HERE AND PRIOR ART 8

CONCLUSIONS 8

REFERENCES 9

RANGE-DOPPLER-COUPLED MOVING TARGET INDICATOR

INTRODUCTION

Conventional pulsed radars must limit their pulse repetition frequency (PRF) if they are required to provide unambiguous target range information. This limited PRF makes it difficult to design effective moving-target-indicators (MTI) for such radars in the higher frequency bands.

Conventional MTI's (Fig. 1) employ one or more interpulse period delays and subtractors to cancel radar echoes from nonmoving reflectors. Unfortunately, however, these MTI's also cancel echoes from moving targets where motion causes successive echoes to differ in phase by multiples of 2π radians. Such target velocities are called blind speeds.

In addition to the blind speed problem, wind-driven rain or chaff [1-3] can produce echoes with spectral spreads that can fill a significant portion of a radar's available doppler space (from zero to the PRF). The elimination of this spectrally spread clutter by an MTI or doppler filter bank widens the regions of zero target response or blind speeds. This decreases the probability of detecting desired targets.

The blind speed problem has been partially solved by MTI using time-changing pulse repetition intervals (PRI) or stagger as this process has been called [1]. However, such systems usually exhibit significant target loss at doppler frequencies near multiples of the radar's average PRF. In addition, staggered MTI cannot cope with second time around clutter (echoes from clutter so far away that the echoes from one pulse return after the radar transmits its next pulse).

The purpose of this report is to describe a new improved variation of an MTI technique originally described in Refs. 5 and 6 that takes advantage of range-doppler-coupling [3,4] in doppler-tolerant pulse-compressors to eliminate blind speeds and to eliminate doppler-space limitations caused by limited radar PRF. Additional advantages of this new MTI are that the true range and velocity of targets are derivable from its output.

RANGE-DOPPLER-COUPLED MTI

This MTI takes advantage of what is called range doppler coupling in pulse expander-compressors such as those employing linear-frequency-modulation and possibly its derivatives (step-approximation-to-linear frequency-modulation or frequency-derived-phase-codes) [3,4,7,8]. This range-doppler-coupling causes the range at which an echo appears to vary with doppler in a direction

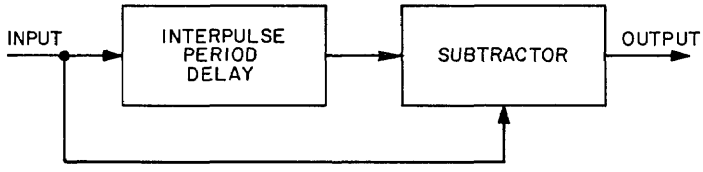

UNCLASSIFIED

Fig. 1 — Typical two-pulse MTI

Manuscript submitted February 8, 1982.

determined by the sign of the doppler frequency and by the direction of the radar's frequency sweep. Thus, an incoming target that would range-doppler-couple inward in range with a radar upsweep would range-doppler-couple outward in range with a radar downsweep.

In this MTI concept, the radar frequency sweep is reversed on alternate pulses so that radially moving targets report at different ranges on successive radar transmissions. Also, nonmoving target echoes appear at the same range on successive transmissions. With this difference in behavior, echoes from one pulse can be subtracted from echoes from the next pulse to cancel nonmoving target echoes without canceling moving target echoes. In this process, the subtraction can be either coherent or noncoherent. The MTI will cancel both pulse compressor peak and range-time-sidelobes of nonmoving target echoes if the radar time-bandwidth-product is constant on all transmissions.

(U) NONCOHERENT MTI

Figure 2 illustrates a two-pulse noncoherent range-doppler-coupled MTI. In this example it is assumed that the radar transmits a pulse of length τ with frequency linearly swept over a bandwidth B on each transmission. In addition, it is assumed that the radar has a constant interpulse period T and that the radar's frequency sweep is reversed on alternate transmissions.

The radar pulse compressor employs a dispersive delay line whose delay is

$$D = D_o + kf \tag{1}$$

where D_o is a constant, f is the frequency of the signal traveling through the delay line, and k is a constant relating frequency to delay.

This delay line is driven at the radar intermediate frequency (IF) which, on a downsweep transmission, is obtained by beating echo signals with a local oscillator below the received signal frequency, and on an upsweep transmission, the echo signals are beat with a local oscillator frequency above the echo signal frequency to reverse the IF frequency sweep. Thus, the IF echo signal from any target starts with a high-frequency f_2 and ends with a low-frequency $f_1 = f_2 - B$. k in Eq. (1) is chosen so that all frequencies in the echo exit from the dispersive delay line at the same time. This requires that

$$kB = \tau \tag{2}$$

or

$$k = \tau/B\,. \tag{3}$$

With this value of k, the output of the dispersive delay line is a pulse of length

$$t_c = 1/B \tag{4}$$

and the radar pulse compression ratio is

$$\rho = \tau/t_c = \tau B\,. \tag{5}$$

This value of t_c provides the radar with a range resolution of

$$\delta R = t_c C/2 = C/2B \tag{6}$$

where C is the velocity of light.

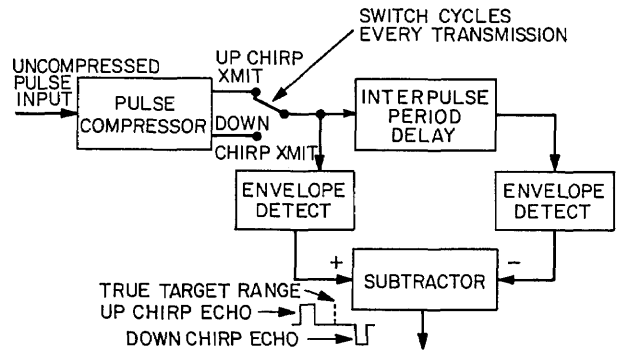

Fig. 2 — Range-doppler-coupled two-pulse MTI (noncoherent) response to incoming target

Range-doppler-coupling in this pulse compressor can be understood by reference to Eq. (1). Any frequency that would have exited from the delay line at a time t_o from a nonmoving target, will exit at a time

$$t_e = t_o + kf_d = t_o + \tau(f_d/B) \tag{7}$$

if the target is moving and has a doppler frequency f_d.

Now

$$f_d = 2V/\lambda \tag{8}$$

where λ is the wavelength of the radar's transmission. Therefore

$$t_e = t_o + \tau(2V/\lambda B) \tag{9}$$

where an incoming target is assumed to have a positive V and an outgoing target is assumed to have a negative V to yield the proper sign for f_d. This time shift of an echo signal with doppler frequency produces a velocity-dependent range shift

$$\Delta R = (2V/\lambda B)C/2 = \tau V f_o/B\,, \tag{10}$$

where $f_o = c/\lambda$ is the radar's carrier frequency.

With Eq. (10), one can derive the target transfer function for the MTI illustrated in Fig. 1 in the absence of clutter. The response to a moving target will maximize when the opposite range-doppler-coupling on successive pulses allows the radar's range resolution to separate the two echoes from the moving target, i.e., when ΔR in Eq. (10) is one half δR in Eq. (6) or

$$\tau V_m f_o/B = C/4B\,. \tag{11}$$

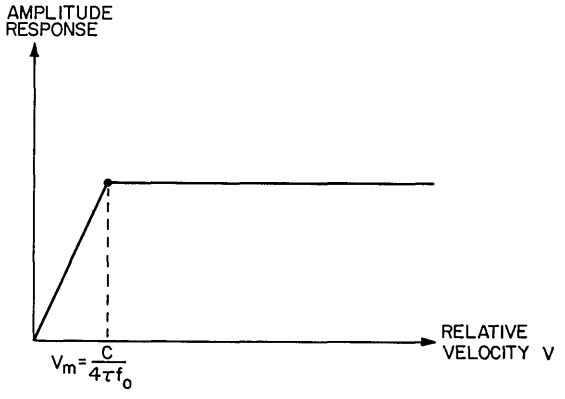

Fig. 3 — Response of noncoherent range-doppler-coupled MTI

CONFIDENTIAL

This maximum response to a target occurs at

$$V_m = C/4\tau f_o \tag{12}$$

and does not decrease significantly for velocities greater than V_m. Figure 3 portrays the response of the MTI (Fig. 2) to targets as a function of velocity with τ and f_o as parameters.

It is interesting to note at this point that, in the absence of clutter, both the true range of a moving target and its velocity can be estimated from the noncoherent MTI output. The true range will be the midpoint between the oppositely range-doppler-coupled returns from the target. The polarity of the first pulse of the pairs (Fig. 2) will reveal the direction of the target velocity, and the pair separation is determined by the magnitude of the target's radial velocity.

COHERENT MTI

In a coherent range-doppler-coupled MTI, the target response (Fig. 4) will peak at lower target velocities than in the noncoherent version. However, it will fluctuate between a peak and the response of a noncoherent MTI as the pulse to pulse target phase varies through multiples of 2π radians. No true blind speeds will be encountered, however, since the range-doppler-coupling prevents complete cancellation of moving target echoes.

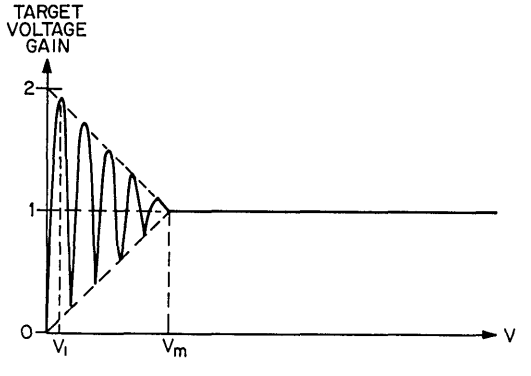

Fig. 4 — Response of coherent 2-pulse range-doppler coupled MTI with $T/\tau = 10$

The first response peak will occur at a target velocity that produces a range change of a quarter wavelength from radar transmission to transmission. This velocity will be such that

$$V_1 T = \lambda/4 \tag{13}$$

or

$$V_1 = \lambda/4T . \tag{14}$$

The ratio of this velocity to V_m for the noncoherent MTI can be found from Eqs. (12) and (14) to be

$$V_1/V_m = (\lambda/4T)(4\tau f_o/C) = \tau/T . \tag{15}$$

Note that the true target range and velocity magnitude are evident at the output of a coherent range-doppler-coupled MTI, but the velocity direction is not evident as it is in the noncoherent case. This is due to the fact that the detected output of the MTI will have the same polarity signals for the oppositely range-doppler-coupled echoes from any given target. Also note that, when τ/T is small, the first peak response of the coherent MTI at V_1 will have twice the amplitude of the noncoherent maximum at V_m due to the two oppositely range-doppler-coupled nearly overlapping echoes adding in-phase. However, when V equals or exceeds V_m, the peak response of the coherent MTI will be equal to that of the noncoherent MTI. Thus, the response of the coherent MTI is always greater than or equal to the response of the noncoherent MTI.

CLUTTER CANCELLATION, TWO-PULSE MTI [9]

The clutter cancellation that can be expected will be determined by the assumed clutter velocity distribution. Differential clutter velocities will cause the clutter echo to decorrelate in the radar interpulse period [10]. Clutter velocity will also cause range-doppler-coupling whose effect can be evaluated from Figs. 3 and 4.

The effect of clutter spectral spread (decorrelation) on a two-pulse range-doppler-coupled MTI can be determined as follows.

Define four sets of uncorrelated Gaussian random numbers each with zero mean and the same mean square values, i.e.,

$$\overline{X_1(t)} = \overline{Y_1(t)} = \overline{X_2(t)} = \overline{Y_2(t)} = 0 \tag{16}$$

and

$$\overline{[X_1(t)]^2} = \overline{[Y_1(t)]^2} = \overline{[X_2(t)]^2} = \overline{[Y_2(t)]^2} = \sigma^2/2 . \tag{17}$$

Let the pulse at the second time tap of the canceler be

$$C_1 = X_1(t) + jY_1(t) \tag{18}$$

and that at the first tap be

$$C_2 = \rho[X_1(t) + jY_1(t)] + (1-\rho^2)^{1/2}[X_2(t) + jY_2(t)] \tag{19}$$

so that

$$\overline{|C_{in}|^2} = \overline{|C_1|^2} = \overline{|C_2|^2} = \sigma^2 \tag{20}$$

and

$$\overline{C_1 C_2^*} = \rho\sigma^2 \tag{21}$$

where ρ is the correlation coefficient between C_1 and C_2.

Coherent MTI Cancellation Ratio [9]

(U) With C_1 and C_2 as successive pulses into a two-pulse coherent MTI, the output residue C_o will be

$$C_o = (1-\rho)C_1 - (1-\rho^2)^{1/2}[X_2(t) + jY_2(t)] . \tag{22}$$

The average output clutter power will then be

$$\overline{|C_o|^2} = (1-\rho)^2\sigma^2 + (1-\rho^2)\sigma^2 = 2(1-\rho)\sigma^2 . \tag{23}$$

The clutter cancellation ratio $\overline{|C_{in}|^2}/\overline{|C_o|^2}$ will then be

$$\overline{|C_{in}|^2}/\overline{|C_o|^2} = 1/2(1-\rho) \tag{24}$$

which agrees with all previously published results.

Noncoherent MTI Clutter Cancellation [9]

C_1 and C_2 at the time taps of a two-pulse noncoherent MTI can be plotted as illustrated in Fig. 5. Note that C_2 is the vector sum of ρC_1 and $d = (1-\rho^2)^{1/2}[X_2(t) + jY_2(t)]$. Note also that, when ρ is close to unity, i.e., ($\rho = 1-\epsilon$, $\epsilon << 1$), $1-\rho = \epsilon$ and $1-\rho^2 \approx 2\epsilon$. As a consequence, $(1-\rho^2)^{1/2} \approx (2\epsilon)^{1/2}$ is much larger than $1-\rho = \epsilon$. Therefore, C_2 can be closely approximated by the vector sum of C_1 and d. With this approximation, the residue of a coherent canceler would be d and its mean square output clutter would be $\sigma^2(1-\rho^2) = 2(1-\rho)\sigma^2 = 2\epsilon\sigma^2$ in agreement with Eq. (23).

Since $(1-\rho^2)[X_2(t) + jY_2(t)]$ is uncorrelated with C_1, it can have any direction with respect to C_1. Thus, it will project with equal rms magnitudes $([1-\rho^2)\sigma^2/2]^{1/2}$ on C_1 and on a direction orthogonal to C_1. When $(1-\rho^2)^{1/2}$ is small, the projection normal to C_1 will not cause the magnitude of C_2 to be significantly different from C_1. Therefore, magnitude differences between C_1 and C_2 will only be produced by the component of d parallel to C_1 and the rms residue of the noncoherent canceler will be

$$\left[\overline{|C_0'|^2}\right]^{1/2} = [(1-\rho^2)/2]^{1/2}\sigma . \tag{25}$$

The average clutter power out with ρ close to unity will then be

$$\overline{|C_0'|^2} = \sigma^2(1-\rho^2)/2 \approx (1-\rho)\sigma^2 \tag{26}$$

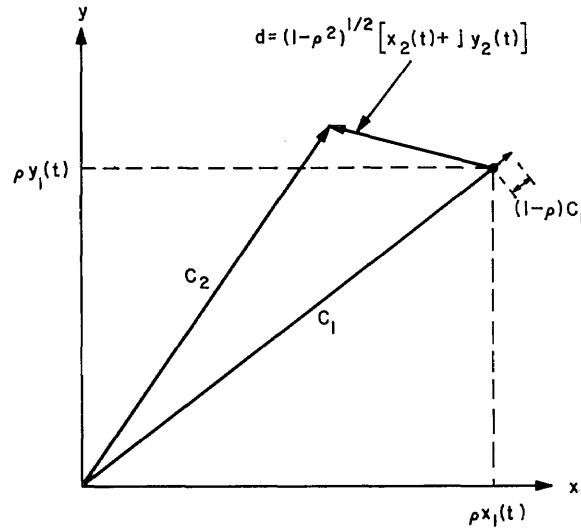

Fig. 5 — Relationship between C_1 and C_2

and the clutter cancellation ratio of the noncoherent two-pulse MTI will be

$$\overline{|C_{in}|^2}/\overline{|C_o|^2} = \sigma^2/\sigma^2(1-\rho) = 1/(1-\rho)\,. \tag{27}$$

Comparing Eqs. (24) and (27) one finds that the noncoherent MTI provides a factor of 2 or 3 dB more clutter cancellation on the average than does the coherent two-pulse MTI. This is the opposite of some previously published results [11].

The total effective clutter cancellation can be found by taking the ratio of the input clutter power σ^2 to the sum of the clutter residues due to spectral spread decorrelation and range-doppler-coupling effects.

COMPENSATION FOR ANTENNA SCAN MODULATION

Multipulse range-doppler-coupled MTI can be instrumented to compensate for antenna scan modulation and thus increase the clutter cancellation and the MTI improvement factor. Figure 6 illustrates a possible configuration of a three-pulse noncoherent MTI. Here again, the true range and radial velocity of targets are evident in the polarity and echo separations in the output of the noncoherent MTI.

TARGET ENHANCEMENT FACTOR

The power gain averaged over the expected doppler space of an MTI can be estimated from Figs. 3 and 4. To do this, one can take the voltage gain at V_m to be $N-1$ where N is the number of pulses used in the MTI. If V_m is small compared to the maximum expected target velocity, the average power gains of a coherent and a noncoherent range-doppler-coupled MTI will be nearly equal.

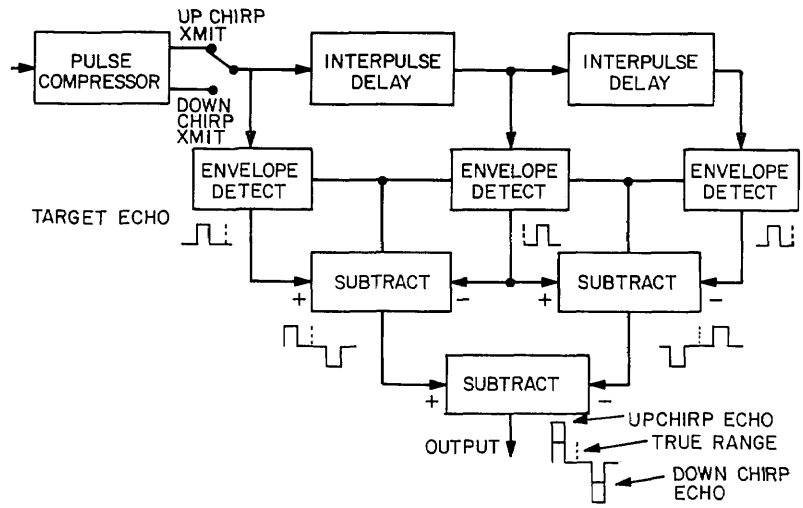

Fig. 6 — Three-pulse noncoherent range-doppler-coupled MTI. Response to incoming target.

In the presence of clutter much larger than targets, the detection process in a noncoherent MTI prior to subtraction will attenuate moving target signals by 3 dB on the average. This results from the fact that only one half of the average target signal power will project on the clutter to produce amplitude differences between clutter and target plus clutter in the up and down sweep echoes.

MTI IMPROVEMENT FACTOR

The MTI improvement factor for a coherent range-doppler-coupled MTI will be the product of the clutter cancellation ratio and the target enhancement factor. However, in a noncoherent MTI, the average target gain will be reduced by 3 dB by large clutter.

DIFFERENCES BETWEEN THE MTI DISCUSSED HERE AND PRIOR ART

This new MTI differs from Ref. 5 in that echoes from successive transmissions are switched into an appropriate filter for that waveform rather than simultaneously entering both matched and mismatched filters. This improves the cancellation of distributed clutter.

The new MTI differs from Ref. 6 in that it uses the same time-bandwidth-product on all transmissions. Thus, the autocorrelation functions of the upsweep and downsweep echoes are identical, and the compressed pulse peak and all range time sidelobes of echoes from nonmoving targets will cancel. The method used in Ref. 6 employs the same bandwidth but different pulse lengths on successive transmissions. Thus, the range-time sidelobes of the compressed echoes on successive transmissions will not be identical for nonmoving targets. As a consequence, the MTI discussed in Ref. 6 will not yield much subclutter visibility in distributed clutter.

CONCLUSIONS

Range-doppler-coupling in doppler-tolerant pulse compressors can be employed to eliminate blind speeds in MTI because the doppler frequency measurement in the pulse compressor is unambiguous. With such a system, the MTI can be implemented in either coherent or noncoherent form without losing target response in the absence of clutter. In the noncoherent form, a moving target's true range, radial speed, and direction are evident in the MTI output.

Plans for the future include a thorough investigation of the improvement factor available from a range-doppler-coupled MTI using an analog pulse compressor. In addition, the possibility of using digital pulse-compressors and frequency modulation derived polyphase codes in this MTI will be investigated.

REFERENCES

1. M. I. Skolnik, *Introduction to Radar Systems*, 2nd ed., McGraw-Hill Book Co., 1980.

2. D. K. Barton, *Radar System Analysis*, Prentice-Hall, Inc., 1964.

3. F. E. Nathanson, *Radar Design Principles*, McGraw-Hill Book Co., 1969.

4. C. E. Cook and M. Bernfeld, *Radar Signals, An Introduction to Theory and Application*, Academic Press, 1968.

5. R. C. Thor, U.S. Patent No. 3,225,349, "Moving Target Indicating System."

6. B. H. Cantrell, Patent Application, Navy Case No. 63,666, "Range-Doppler Coupled Area MTI," Nov. 27, 1978.

7. B. L. Lewis and F. F. Kretschmer, Jr., "A New Class of Polyphase Pulse Compression Codes and Techniques," IEEE Trans. Aerospace and Electronic Systems AES-17(3), 364, May 1981.

8. B. L. Lewis and F. F. Kretschmer, Jr., "Linear Frequency Modulation Derived Polyphase Pulse-Compression Codes and an Efficient Digital Implementation," NRL Report 8541, Nov. 1981.

9. F. F. Kretschmer, F. C. Lin, and B. L. Lewis, "A Comparison of Coherent and Noncoherent MTI," NRL Report 8591, publication pending.

10. *Reference Data for Radio Engineers*, 5th ed., Howard W. Sams and Co., Inc., 1972, pp. 39-6 and 39-7.

11. R. S. Berkowitz, *Modern Radar*, John Wiley and Sons, Inc., 1965.