5341

UNCLASSIFIED

CONFIDENTIAL

UNCLASSIFIED

NRL Report 8145

cy 34

# Multipath-Tolerant Digital Sidelobe Canceler

[Unclassified Title]


BERNARD L. LEWIS and FRANK F. KRETSCHMER, JR.

*Target Characteristics Branch*
*Radar Division*


June 24, 1977


**NAVAL RESEARCH LABORATORY**
**Washington, D.C.**


CONFIDENTIAL: classified by CONRL.
~~Exempt from GDS of E.O. 11652.~~
~~Exempt Cat. (3).~~
Auto. Declass. 31 Dec. 1989

CONFIDENTIAL

UNCLASSIFIED

Distribution limited to U.S. Government Agencies only; test and evaluation; June 1977. Other requests for this document must be referred to the Commanding Officer, Naval Research Laboratory, Washington, D.C. 20375.

CONFIDENTIAL

**NATIONAL SECURITY INFORMATION**

Unauthorized Disclosure Subject to Criminal Sanctions.

CONFIDENTIAL

UNCLASSIFIED

CONFIDENTIAL

SECURITY CLASSIFICATION OF THIS PAGE (When Data Entered)

| REPORT DOCUMENTATION PAGE | | READ INSTRUCTIONS BEFORE COMPLETING FORM |
|---|---|---|
| 1. REPORT NUMBER<br>NRL Report 8145 | 2. GOVT ACCESSION NO. | 3. RECIPIENT'S CATALOG NUMBER |
| 4. TITLE (and Subtitle)<br>MULTIPATH-TOLERANT DIGITAL SIDELOBE CANCELER (U) | | 5. TYPE OF REPORT & PERIOD COVERED<br>An interim report on a continuing NRL Problem.<br>6. PERFORMING ORG. REPORT NUMBER |
| 7. AUTHOR(s)<br>Bernard L. Lewis and Frank F. Kretschmer, Jr. | | 8. CONTRACT OR GRANT NUMBER(s) |
| 9. PERFORMING ORGANIZATION NAME AND ADDRESS<br>Naval Research Labortory<br>Washington, D.C. 20375 | | 10. PROGRAM ELEMENT, PROJECT, TASK AREA & WORK UNIT NUMBERS<br>NRL Problem R02-65<br>Program Element 62712N<br>Project ZF12-151-001 |
| 11. CONTROLLING OFFICE NAME AND ADDRESS<br>Office of Naval Research<br>Arlington, Va. 22217 | | 12. REPORT DATE<br>June 24, 1977<br>13. NUMBER OF PAGES<br>13 |
| 14. MONITORING AGENCY NAME & ADDRESS(if different from Controlling Office) | | 15. SECURITY CLASS. (of this report)<br>CONFIDENTIAL<br>15a. DECLASSIFICATION/DOWNGRADING SCHEDULE<br>XGDS-3-1989 |

16. DISTRIBUTION STATEMENT (of this Report)

Distribution limited to U.S. Government Agencies only; test and evaluation; June 1977. Other requests for this document must be referred to the Commanding Officer, Naval Research Laboratory, Washington, D.C. 20375.

17. DISTRIBUTION STATEMENT (of the abstract entered in Block 20, if different from Report)

18. SUPPLEMENTARY NOTES

19. KEY WORDS (Continue on reverse side if necessary and identify by block number)

Radar
ECCM
Sidelobe cancelers

20. ABSTRACT (Continue on reverse side if necessary and identify by block number)

(C) This report describes a new type of coherent sidelobe canceler that is being instrumented for test on the SPS-49 radar. The system employs digital bandpass partitioning, digital open-loop cancelers, and auxiliary signal preprocessing. These innovations make the system tolerant of multipath effects and bandpass mismatch between the radar and auxiliary receivers. The open-loop cancelers employ optimum weights to cancel jamming and have zero settling time in removing interference entering the radar's sidelobes. Thus, they can remove signals from false-target repeaters.

DD FORM 1 JAN 73 1473 EDITION OF 1 NOV 65 IS OBSOLETE
S/N 0102-014-6601



CONFIDENTIAL

SECURITY CLASSIFICATION OF THIS PAGE (When Data Entered)

UNCLASSIFIED

## CONTENTS

INTRODUCTION AND SUMMARY . . . . . 1

BACKGROUND . . . . . 2

SOLUTIONS OF PROBLEMS . . . . . 3

Solution of the Bandpass Mismatch Problem . . . . . 3
Solution of the Multipath Problem. . . . . 3
Solution of the Loop-Gain Problem . . . . . 3
Solution of the Instability, Large-Dynamic-Range, and Slow-Response Problems . . . . . 7

NEW CANCELER SYSTEM . . . . . 8

CANCELER STATUS AND PLANS . . . . . 10

REFERENCES . . . . . 10

UNCLASSIFIED

# MULTIPATH-TOLERANT DIGITAL SIDELOBE CANCELER
[Unclassified Title]

## INTRODUCTION AND SUMMARY

(C) This report describes a new approach to coherent sidelobe cancellation that is being developed for test on the AN/SPS-49 radar. The new system converts the radar and four auxiliary intermediate frequency (IF) signals to digital data in inphase "I" and quadrature "Q" form. Each signal is then passed through digital fast-Fourier-transform (FFT) circuits to subdivide the receiver passbands into eight contiguous subbands. These subbands are then commutated into open-loop digital cancelers [1] connected in the auxiliary-signal-preprocessing configuration [2]. These cancelers employ the optimum weights to minimize any interference entering the radar sidelobes and are independent of the power level of the auxiliary signal. The cancelers have zero settling time and can remove both barrage jamming and signals from false-target repeaters. The output from these cancelers is then decommutated and passed through an inverse fast-Fourier-transform (IFFT) circuit to regain the original signal bandwidth with interference removed.

(C) The bandpass subdivision into eight subbands permits the cancelers to use eight phase and amplitude weights to force a match of the radar and auxiliary receiver passbands. This eliminates critical tuning of the receivers and permits the cancelers to accommodate multipath phenomena and bandpass mismatches.

(C) The open-loop digital cancelers take advantage of the fact that the optimum weight is obtainable from the input data if circuit drifts are eliminated via digital processing. The system accommodates multiple sources of interference by employing auxiliary-signal-preprocessing and series-connected cancelers that eliminate the requirement for feedback as used in conventional parallel-loop systems. The weight derivation employed in these cancelers provides the proper weight to cancel interference on the first sample of the interference. The performance of these cancelers is independent of the auxiliary-signal power level, and larger jammers cannot prevent cancellation of signals from small jammers. In addition, since no closed loops are used, the system is unconditionally stable.

(U) Fabrication of this system will be complete in September 1977, and initial tests are scheduled on an SPS-37A radar at the Chesapeake Bay Division (CBD) of the Naval Research Laboratory (NRL). The system will then be connected to an AN/SPS-49 radar for evaluation in the fall.

Manuscript submitted June 10, 1977.

## BACKGROUND

(C) Conventional coherent sidelobe cancelers (CSLCs) are subject to many problems. The most important problems are the:

- Critical bandpass match required between radar and auxiliary antennas and receivers,
- Sensitivity to multipath phenomena,
- Proportionality of the loop gain to the auxiliary-signal power,
- Tendency toward instability,
- Large dynamic range required, and
- Slow response.

(C) The bandpass match is a problem because a CSLC loop can employ only one phase and one amplitude weight on any auxiliary signal prior to subtracting it from the radar signal. If the radar and auxiliary passbands do not match, poor cancellation results.

(C) The sensitivity to multipath phenomena stems from the wide bandwidth of the radar receiver and the large difference in gain between the radar mainlobe and the auxiliary antenna. Wideband interference reflected into the radar's mainlobe by a local scatterer is decorrelated from that entering the auxiliary antenna directly, and the interference entering the auxiliary antenna via the scatterer is too small to be used by the adaptive loops. In effect the local scatterer can be considered to be a mainlobe jammer against which conventional CSLCs are powerless.

(C) The proportionality of the loop gain to auxiliary-signal power causes the CSLC system to concentrate on strong interference and to essentially ignore weaker yet significant interference. In addition, to insure stability, the internal loop gain must be kept low enough to accommodate all expected interference levels. Thus the loops cannot optimally suppress interference.

(C) The tendency toward instability is caused by the CSLC loops being closed in parallel (loop-to-loop interaction) and by the gain dependence on auxiliary-signal power level.

(C) The requirement for a large dynamic range is caused by the parallel-loop arrangement and correlation between the auxiliary signals in a multiple-loop system. Each loop can introduce components that another loop tries to remove. Thus the loops have to buck each other and often have to employ weights significantly greater then unity.

(C) The slow response is introduced by the parallel-loop arrangement used in conventional sidelobe cancelers. The system settles via loop-to-loop feedback through the narrow-band correlating filters in each adaptive loop.

UNCLASSIFIED

(U) All of these problems are solved in the new system developed by NRL and described in this report.

## SOLUTIONS OF PROBLEMS

### Solution of the Bandpass Mismatch Problem

(C) The bandpass mismatch problem was solved by dividing the radar and auxiliary receiver passbands into eight reproducible contiguous subbands via digital fast-Fourier-transform (FFT) circuits and commutating these subbands into digital open-loop cancelers. This bandpass subdivision permits the canceler system to employ eight phase and amplitude weights to force bandpass match.

### Solution of the Multipath Problem

(C) The multipath problem due to the short autocorrelation time ($\tau = 1/B$) of jamming that fills the radar passband ($B$) was solved by the same system that solved the bandpass mismatch problem. The bandpass partitioning into eight subbands increases the autocorrelation time of jamming entering the cancelers by a factor of eight. This insures that any significant multipath signal entering the mainlobe of the radar antenna will be correlated with that signal entering the auxiliary antennas directly.

### Solution of the Loop-Gain Problem

(C) The problem of loop gain being proportional to auxiliary-signal level can be solved if open-loop cancelers are employed. Such open-loop cancelers are possible with digital techniques, since digital processors do not drift with time, temperature, etc. Such drifts force conventional analog cancelers into closed-loop operation, and this closed-loop operation brings about the dependence of loop gain on auxiliary signal power.

(U) Figure 1 is an equivalent circuit of a conventional closed-loop canceler. The main signal $M$, auxiliary signal $A$, and residue signal $R$ are complex numbers. The loop operates to form

$$R = M - WA, \tag{1}$$

where the weight $W$ can be seen from Fig. 1 to be

$$W = G\,\overline{RA^*} \tag{2}$$

in which $A^*$ is the complex conjugate of $A$, $G$ is the gain built into the loop, and the bar denotes averaging performed by the low-pass filter $F$. Multiplication of both sides of (1) by $A^*$ and averaging yields

$$\overline{RA^*} = \overline{MA^*} - G\,\overline{RA^*}\,\overline{AA^*}. \tag{3}$$

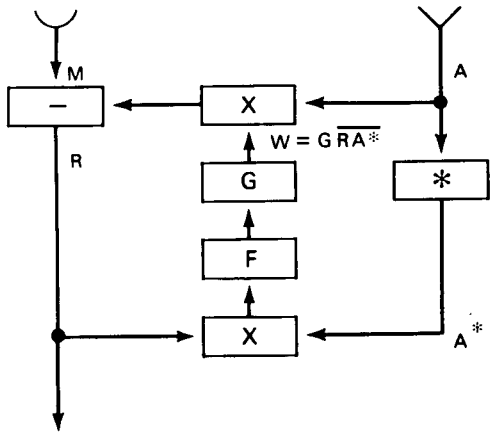


(U) Fig. 1 — Conventional closed loop. $M$ is the main signal, $A$ is the auxiliary signal, $R$ is the residue signal, $A^*$ is the complex conjugate of $A$, $F$ is a low-pass filter, $G$ is the gain built into the loop, and $W$ is the weight.

From (2) and (3)

$$\frac{W}{G} = \overline{MA^*} - W\,\overline{AA^*}. \tag{4}$$

Separating terms in (4) results in

$$W\left[\frac{1}{G} + \overline{AA^*}\right] = \overline{MA^*},$$

and solving for $W$ yields

$$W = \frac{G\,\overline{MA^*}}{1 + G\,\overline{AA^*}}\,. \tag{5}$$

If $G\,\overline{AA^*}$ is large, the closed-loop weight approaches

$$W_\infty = \frac{\overline{MA^*}}{\overline{AA^*}} = W_{\text{opt}}, \tag{6}$$

where $W_{\text{opt}}$ is the optimum weight. The weight $W$ in (5) is always less than $W_{\text{opt}}$ unless $G\,\overline{AA^*}$ approaches infinity.

(U) Reference 1 noted that $W_{\text{opt}}$ in (6) is obtainable from the input data $M$ and $A$ if driftless processors (digital processors) are employed and suggested the canceler illustrated in Fig. 2. In this canceler the inputs are digital words describing the inphase

UNCLASSIFIED

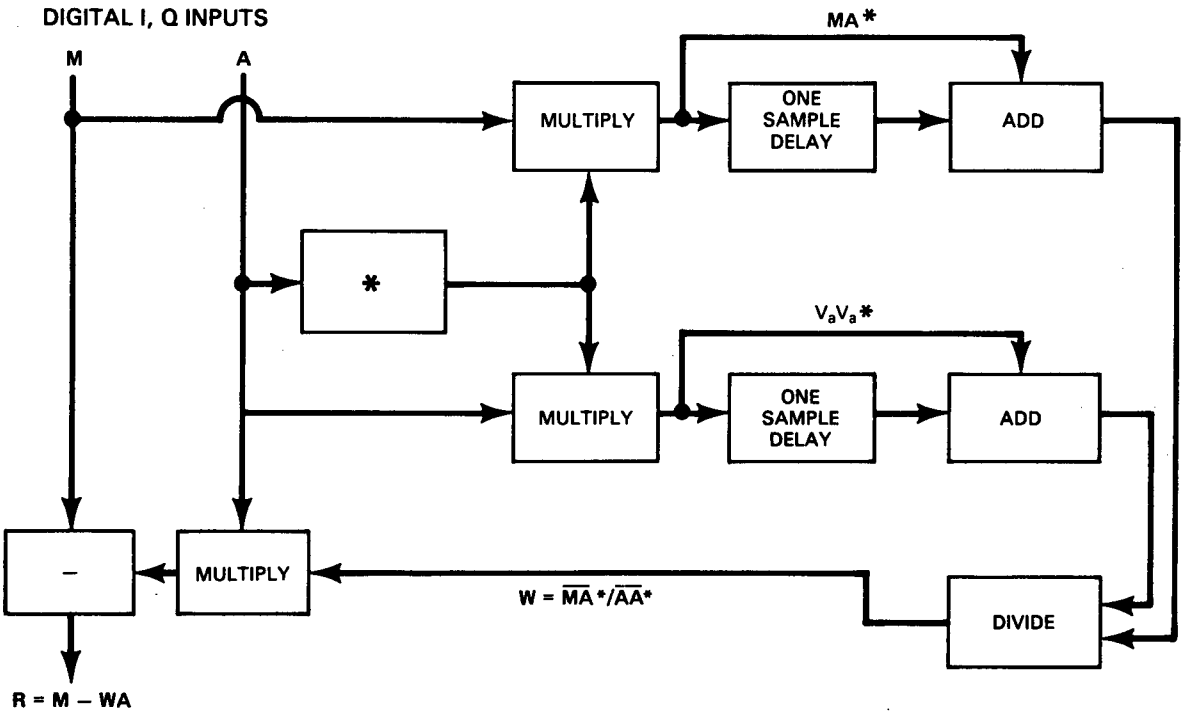


(U) Fig. 2 — Digital open loop

($I$) and quadrature ($Q$) components of the sampled received radar and auxiliary signals. Since $I$ and $Q$ are used, the signals can be sampled at the radar bandwidth $B$ without losing information. The averaging of $MA^*$ and $AA^*$ can be done by adding two or more samples of the data as shown and dividing the sums to form

$$W_{i+1} = \frac{M_i A_i^* + M_{i+1} A_{i+1}^*}{A_i A_i^* + A_{i+1} A_{i+1}^*} , \tag{7}$$

where $i$ refers to the $i$th sample and $i + 1$ is the next sample. In this form, $W$ is obtained from a sliding window.

(U) The canceler illustrated in Fig. 2 determining $W$ from two samples was tested on a computer using random-number generators to provide the inputs. The main signal $M$ was composed of two uncorrelated parts, jamming and thermal noise, and the auxiliary signal contained jamming correlated with that in the main signal and thermal noise uncorrelated with the jamming and the thermal noise in the main channel:

$$M_i = J_i + N_{1i} \tag{8}$$

and

$$A_i = K J_i + N_{2i} , \tag{9}$$

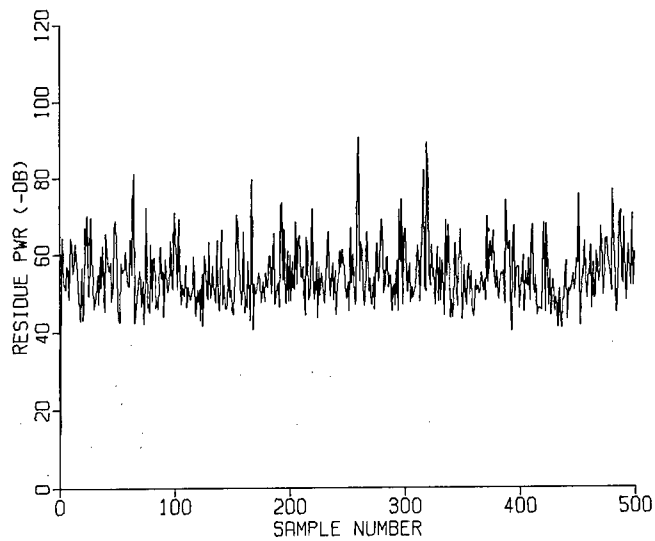


**(U) Fig. 3 — Response of a digital open-loop canceler to jamming 50 dB above thermal noise in both the main and auxiliary channels.**

where $K$ was a constant complex number and $J_i$, $N_{1i}$, and $N_{2i}$ were independent complex random numbers that changed from sample to sample. Figure 3 is the result obtained with $|K| = 1$, $\overline{|N_1|^2} = \overline{|N_2|^2}$, and $\overline{|J|^2} = 10^5\overline{|N_1|^2}$, where the bars denote statistical averages. It is important to note that the jamming canceled down to the thermal noise *on the first sample containing jamming*, which was sample 1.

(U) The instantaneous response of this loop can be understood by referring to the definition of $W$ in (7). If jamming starts on sample $i + 1$ with magnitude much greater than the thermal noise, then

$$M_i A_i^* \ll M_{i+1} A_{i+1}^* \tag{10}$$

and

$$A_i A_i^* \ll A_{i+1} A_{i+1}^*. \tag{11}$$

Therefore

$$W_{i+1} \approx \frac{M_{i+1} A_{i+1}^*}{A_{i+1} A_{i+1}^*} = \frac{M_{i+1}}{A_{i+1}} \tag{12}$$

and

$$R_{i+1} \approx M_{i+1} - W_{i+1} A_{i+1} = M_{i+1} - \frac{M_{i+1} A_{i+1}}{A_{i+1}} = 0. \tag{13}$$

UNCLASSIFIED

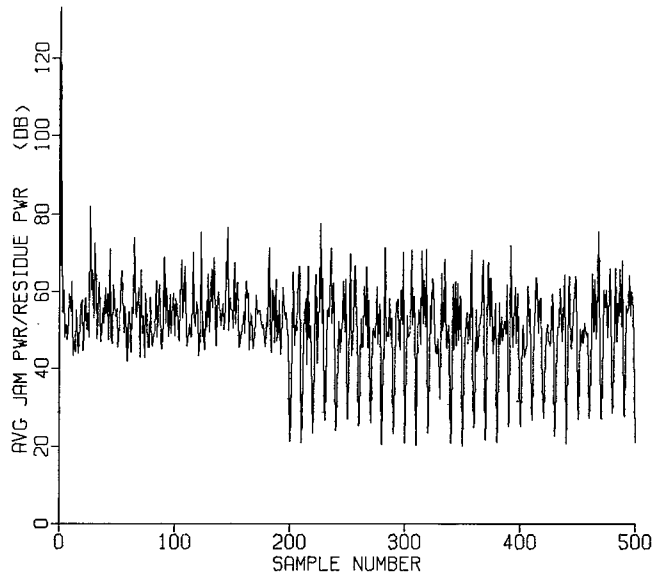


**(U) Fig. 4 — Same case as Fig. 3 except that a signal 20 dB below jamming is inserted every 10th sample starting at sample 200.**

(U) Figure 4 is the same case as that in Fig. 3 except that signals 20 dB below jamming were inserted in the main channel for only one sample at a time every 10th sample starting at sample 200. The canceler canceled the jamming down to thermal noise and left the signal detectable.

### Solution of the Instability, Large-Dynamic-Range, and Slow-Response Problems

(U) Solution for the problem of the loop gain being proportional to auxiliary-signal power also solves the problems of tendency toward instability, large dynamic range, and slow response.

(C) This solution represented by the open loop canceler cannot go unstable, because it is not a closed loop. It also cancels the first sample of jamming to arrive at the radar and auxiliary antennas. Thus this canceler can effectively replace sidelobe blankers in removing false-target repeaters entering via the radar sidelobes.

(C) The open-loop canceler cannot be used in a parallel canceler arrangement to handle multiple jammers, since it does not employ feedback. However a better configuration is available in the form of an auxiliary-signal-preprocessing system such as that shown in Fig. 5 [2].

(C) In this configuration cancelers decorrelate the auxiliary signals before they cancel jamming from the radar signal. This eliminates the need for the parallel-loop arrangement and allows the multiple jammer canceler system to settle in the time required for one canceler to settle. No canceler has to buck another, and recirculation

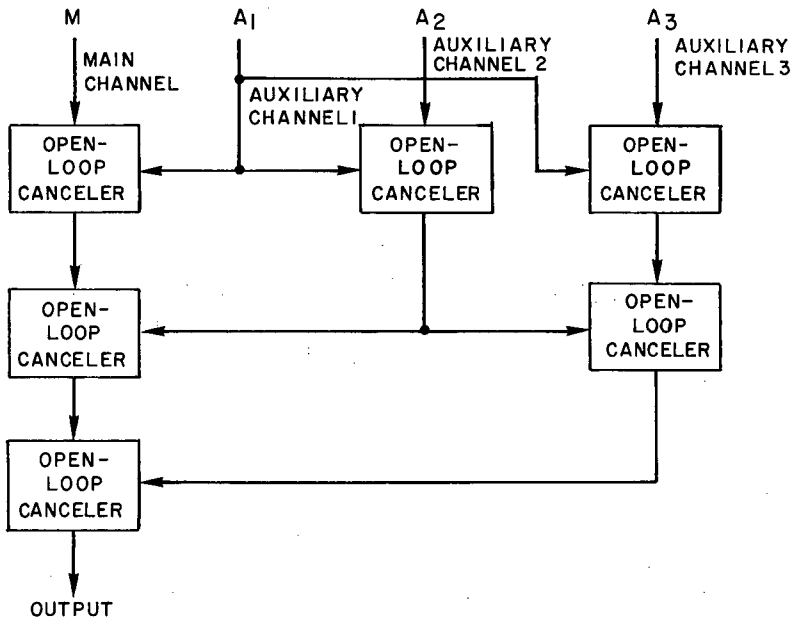


(C) Fig. 5 — Auxiliary-signal-preprocessing system with three auxiliary signals

through narrow-band correlators is not employed. This also aids in solving the dynamic-range and slow-response problems.

(C) Figure 6 is a computer simulation of a two-auxiliary-canceler operation employing open-loop cancelers averaging two samples and using auxiliary signal preprocessing. In this case, two uncorrelated jamming signals $J_1$ and $J_2$ were employed with $\overline{|J_2|^2} = 10^2\overline{|J_1|^2}$. The phase of $J_1$ in the auxiliary channels 1 and 2 with respect to that in the main channel was taken to be 0 and 140 degrees respectively, and that of $J_2$ in the auxiliary channels 1 and 2 with respect to that in the main channel was taken to be 180 and 0 degrees respectively. The magnitude of $J_1$ in the auxiliary channels was taken to be equal to that in the main channel, and the magnitude of $J_2$ in the main channel was taken to be 0. In addition, independent thermal noise signals were introduced into the three channels 100 dB down from $J_1$ and signals 20 dB down from $J_1$ were inserted in the main channel every 20th sample starting at sample 200. The system canceled the jamming down to thermal noise level and left the signals detectable.

## NEW CANCELER SYSTEM

(C) The new coherent sidelobe canceler system (Fig. 7) converts the radar and auxiliary signals into inphase ($I$) and quadrature ($Q$) digital data prior to processing. These digital signals are passed through fast-Fourier-transform (FFT) networks that divide the radar and each auxiliary receiver passband up into $n$ parallel subbands. These subbands are successively commutated into a digital open-loop canceler system connected in the preprocessing configuration. Each open-loop canceler employs an $n$-way commutated digital memory (Fig. 8). The dwell time on each subband is the reciprocal of the radar

UNCLASSIFIED

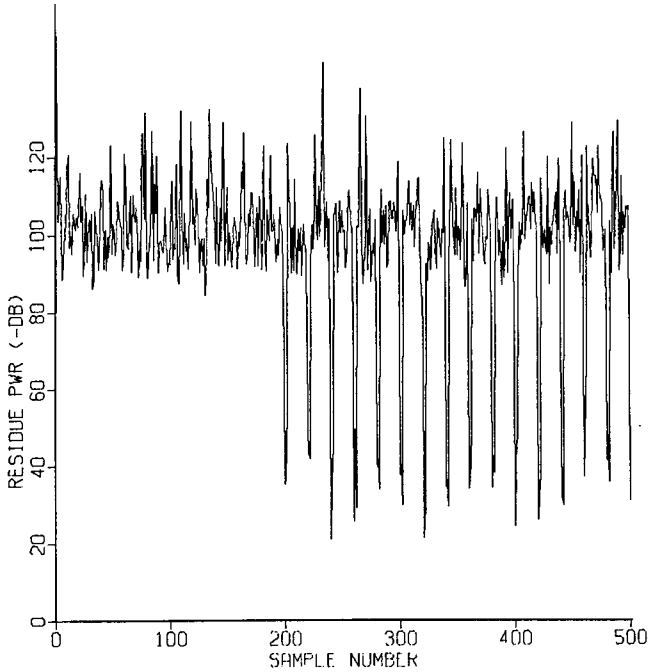


(C) Fig. 6 — Response of a two-auxiliary-canceler preprocessing configuration to two jammers

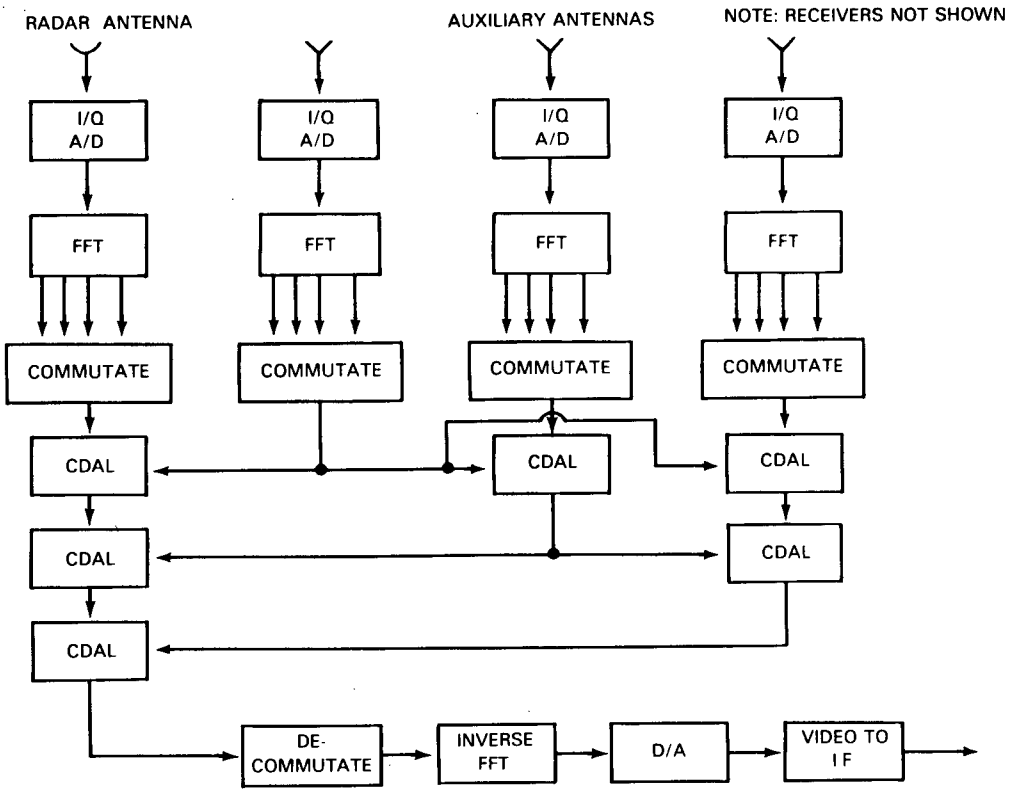


(C) Fig. 7 — New coherent sidelobe canceler system (CDAL = commutated digital adaptive loop)

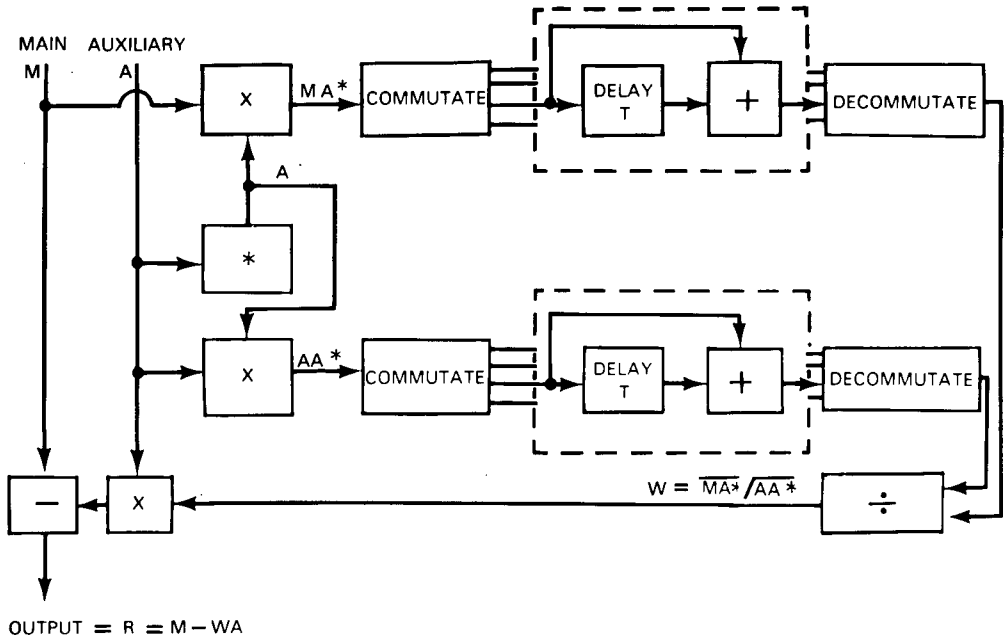


(C) Fig. 8 — Commutated digital adaptive loop

bandwidth $B$, and the sampling rate of each subband is $B/n$ which preserves all information. The output of the canceler system is decommutated, passed through an inverse FFT (IFFT), converted to analog $I$ and $Q$ video, and reformed as an intermediate frequency signal with jamming removed.

## CANCELER STATUS AND PLANS

(U) Instrumentation of the new system will be complete in September 1977. It will then be initially tested on an AN/SPS-37A radar at the Chesapeake Bay Division (CBD) of NRL. This radar is presently equipped with a conventional three-loop analog canceler system manufactured by General Electric, so that three auxiliary signals will be available. The equipment will then be moved to an AN/SPS-49 radar with four auxiliary receivers for final evaluation in the fall or winter of 1977.

## REFERENCES

1. F.F. Kretschmer, Jr., and B.L. Lewis, "Digital Open-Loop Sidelobe Canceler Techniques," NRL Report 8100 (Unclassified), 6 Apr. 1977.
2. F.F. Kretschmer, Jr., "Analysis of Coherent Sidelobe Canceler Configurations," NRL Report 8078 (Confidential), 16 Dec. 1976.