UNCLASSIFIED

NRL Report 6216

Filtration of Salt Smoke from Chlorate Candle Oxygen

S. H. Smith, J. K. Musick, and R. R. Miller

Inorganic and Nuclear Chemistry Branch
Chemistry Division

February 11, 1965

U.S. NAVAL RESEARCH LABORATORY
Washington, D.C.

ABSTRACT

Filtration of a sodium chloride aerosol in high concentration proved to be a continuing problem during the development of chlorate oxygen candles and their associated equipment for use on submarines. Rockwool-wire mesh combinations were first used in welded assemblies which were cleaned by water washing when they became clogged. The rockwool was later replaced with fiberglass blanket, and two modifications of the assembly were made, but the filter use remained inconvenient because of inadequate salt capacity.

A progressive step proved to be alteration of the assembly to use a throwaway fiberglass element and elimination of the washing operation. Further improvement was made possible by use of a woven replaceable fiberglass sleeve. The recently constructed assembly incorporating woven sleeve elements is to be subjected to sea trials as soon as possible.

PROBLEM STATUS

This is an interim report on the problem; work is continuing.

AUTHORIZATION

NRL Problem C08-05
BUSHIPS SF-013-08-03, Tasks 4092,
4093, 4094, 4095

Manuscript submitted November 6, 1964.

Copies available from
Clearing House for Federal Scientific and
Technical Information (CFSTI)
Sills Building, 5285 Port Royal Road
Springfield, Virginia 22151
$.50

FILTRATION OF SALT SMOKE FROM CHLORATE CANDLE OXYGEN

INTRODUCTION

Chlorate candles were first used operationally aboard U.S. submarines in 1958. They had been in use some time prior to that in British vessels. They are a formulation of sodium chlorate, an oxidizable material (customarily iron), a binder, and a suitable igniter. They are used in a stainless steel container in a vertical position and burn from top to bottom leaving a rigid clinker of salt and iron oxide. The combustion of the iron generates an amount of heat usually in excess of that required to raise the chlorate from ambient condition to its decomposition temperature; this excess is absorbed by the fusion of NaCl produced by the decomposition, and the temperature is thus regulated quite closely at the melting point of salt (801°C). Since this temperature is also above the melting point of chlorate, the need for a binder (of higher melting point) and a vertical position arises.

The molten condition existing at the time of decomposition of the chlorate causes a rather troublesome problem - the generation of an aerosol of NaCl. This smoke is harmless physiologically, but it can contribute to the short circuiting of electrical equipment and corroding of metal surfaces exposed to it! Therefore, considerable importance is attached to the complete removal of this smoke from the effluent oxygen gas stream.

INITIAL DESIGNS

The first salt filters provided the users of chlorate candles (see Fig. 1) were designed by Mine Safety Appliances Company who was also the fabricator of the burners and candles.* Construction was of stainless steel with a rockwool filter medium. It had been discovered that one could not pass candle oxygen through any appreciable thickness of salt cake without an unduly large pressure drop, so this filter was made with as large an area as was feasible. The planned procedure was to use the filter until the pressure differential reached 5 psi or more, then remove it and wash it while an alternate was in service. Since the filter would not function while wet, it was to be dried by mounting at the effluent connection of the alternate filter and letting the hot oxygen gas drive off residual water.

The first practical use of this system was on the USS SEAWOLF (SS(N)575) during her 60-day submergence in August-September of 1958, and again during an NRL test party's cruise in November of 1958. The filter drying part of the plan failed because the water content of the oxygen as it evolved from the candle was already high enough to give almost 100% relative humidity at the filter. The filters were dried by heating in the galley stove and then passing air from a hot air blower through them for a while. This procedure was very cumbersome because of the distance to the galley and because of the brief time available for this use of the stove.

It was found that only 5 to 10 candles could be burned before a filter had to be changed, and this certainly contributed importantly to the general inconvenience accompanying the use of chlorate candles. Later Mine Safety Appliances Company submitted for evaluation a filter employing the same basic technique but with its area enlarged until

*NRL Ltr Rpt 6130-66A:JM:ec, 20 Apr. 1962.

it would filter about 24 candles before getting clogged. It was rectangular in shape, about 12×24×3 inches, and had rockwool supported on stainless steel wire mesh in an accordion pleat fashion. It, too, was difficult to dry after washing the salt out. Several of these units are believed to be in use on submarines now.

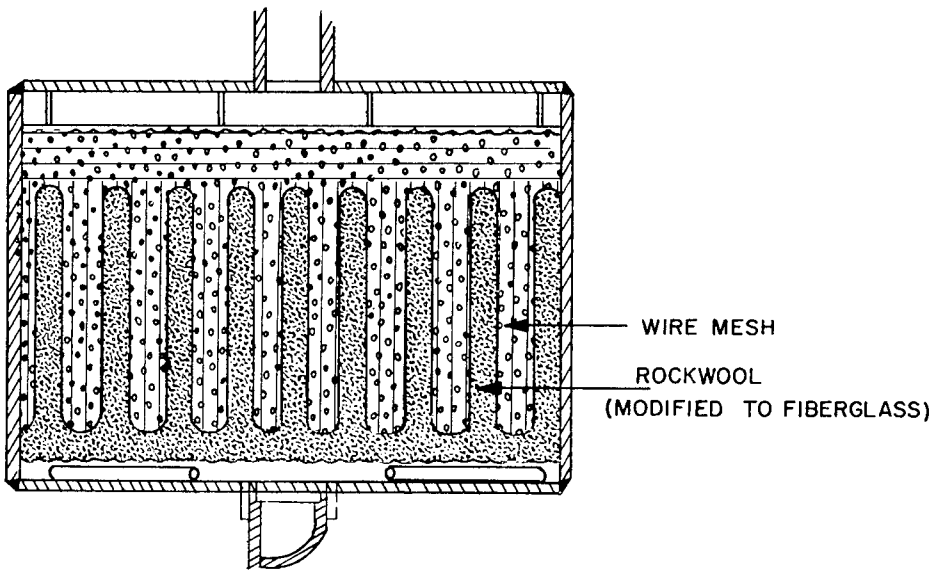

Fig. 1 - Original filter assembly for oxygen candle burner

The original filters (Fig. 1) had 1-inch male pipe nipples at the inlet and 1-inch female pipe thread at the outlet. Since use of the filter required such frequent making and breaking of connections, a modification on a later contract for candle burners and filters consisted of using a 1-1/2-inch pipe union male on the inlet and female on the outlet. Handles were welded on the female part so that no tool was required for tightening. The modified filters incorporated fiberglass blanket as the filter medium rather than rockwool.

NRL DESIGNS

Up through 1960 all design effort on the filter had been by M.S.A. (Mine Safety Appliances Co.) with some consultation and testing at NRL. In 1961 NRL personnel at the request of BUSHIPS began a more concerted effort on filter design improvement.

It was by this time apparent that washing of the filter was something to be avoided; therefore, either a throwaway insert of some sort was indicated or possibly a scrubber. A few simple laboratory experiments resulted in early discard of the scrubber idea. An initial design of a throwaway insert is diagrammed in Fig. 2. It was thought that these inserts could be packed with each candle. The filter medium was again fiberglass blanket. (Incidentally, this type of fiberglass is normally marketed with a lubricating and binding

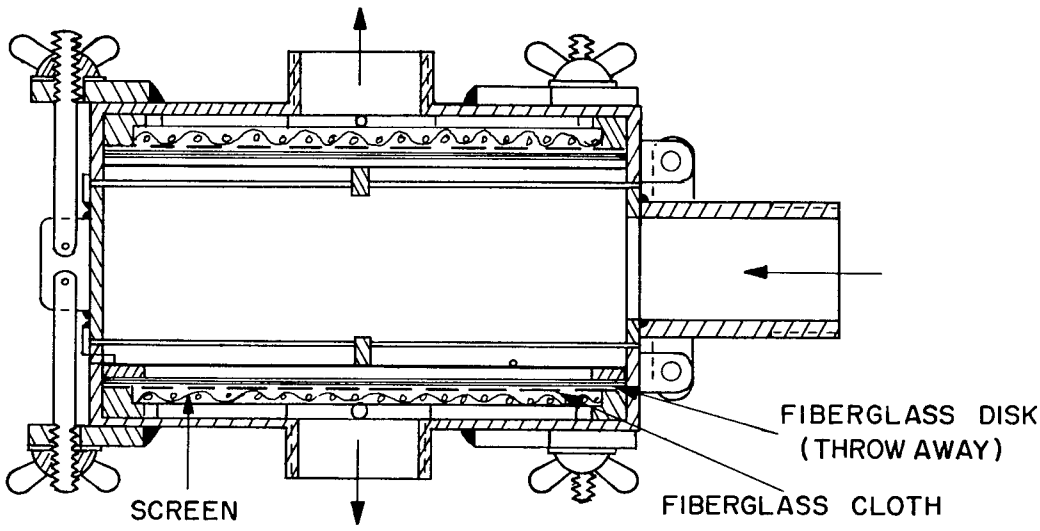

Fig. 2 - NRL filter assembly with throwaway fiberglass filter

resin but is obtainable without it; if this resin is present, as indicated by a tan rather than white color, it must be burned out before use of the blanket as a filter. Under certain high temperature conditions, which can be obtained in a burner filter, the resin will soften and flow into a completely impervious mat!)

Several filters of this design with minor variations were built by M.S.A. and sent to submarines along with a supply of fiberglass discs of the proper dimensions. Performance was unsatisfactory because the filter area was too small and excess pressure developed. This fact had escaped notice during the performance of evaluation tests at NRL because an older style of candle had been used. The oxygen flow rate was only a little more than 1 cfm and quite stable whereas the larger candles being supplied to the Navy by this time had flow rate surges approaching 10 cfm.

Since replaceable fiberglass filter pads still seemed a good idea, the next step was the design of an assembly permitting a larger area of fiberglass. Fig. 3 shows the result of this endeavor. The fiberglass pad for this assembly measured one foot in circumference (including some overlap) and 18 inches long. The unit was given to the SEAWOLF (SS(N)575) in April of 1963 along with a supply of filter pads. They reported some continuing problems concerning smoke leakage, but the filters did function satisfactorily for an average of 14 candles (120 cu ft each), a considerable improvement over previous filters. They were considered a little messy to change because the salt residue scattered around the work area.

Beach Chemical Company used a modification of the Fig. 3 design (see Fig. 4) on a production contract for 14 burners and filters for the Navy. These are in current use in the submarine fleet.

PRESENT DEVELOPMENTS

To solve the filter problem NRL has presently under development a further slight modification of the design of Fig. 4 which involves the use of a woven fiberglass sleeve as the filter medium. The assembly has been altered slightly (Fig. 5) and can now be placed inside the burner when the equipment is in storage. The fiberglass sleeve is mounted by

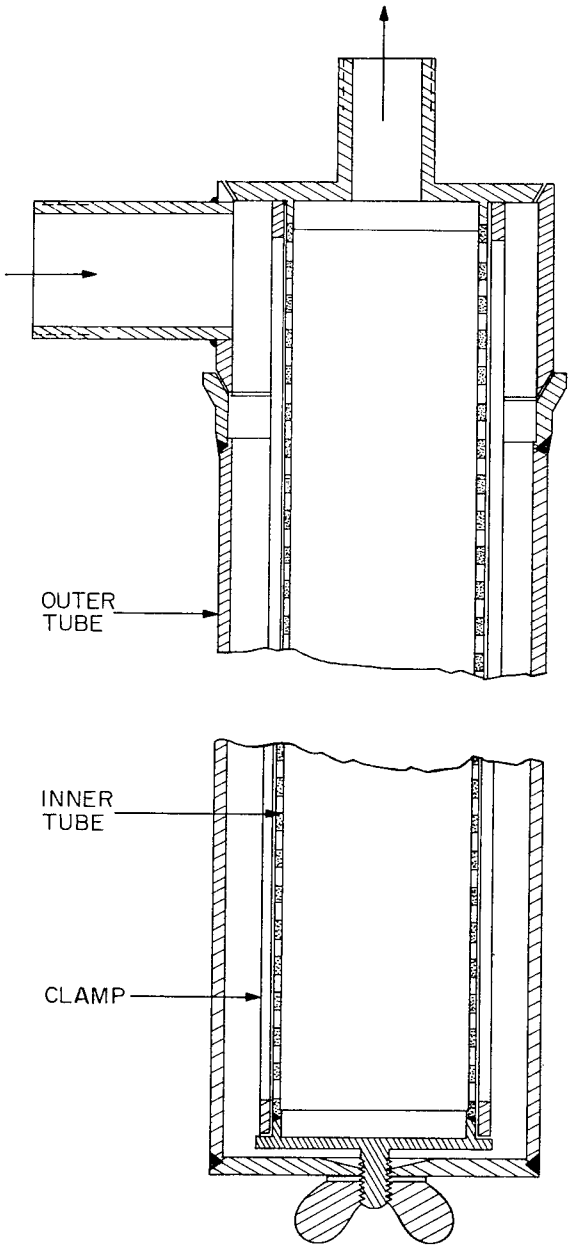

Fig. 3 - NRL cylindrical filter assembly

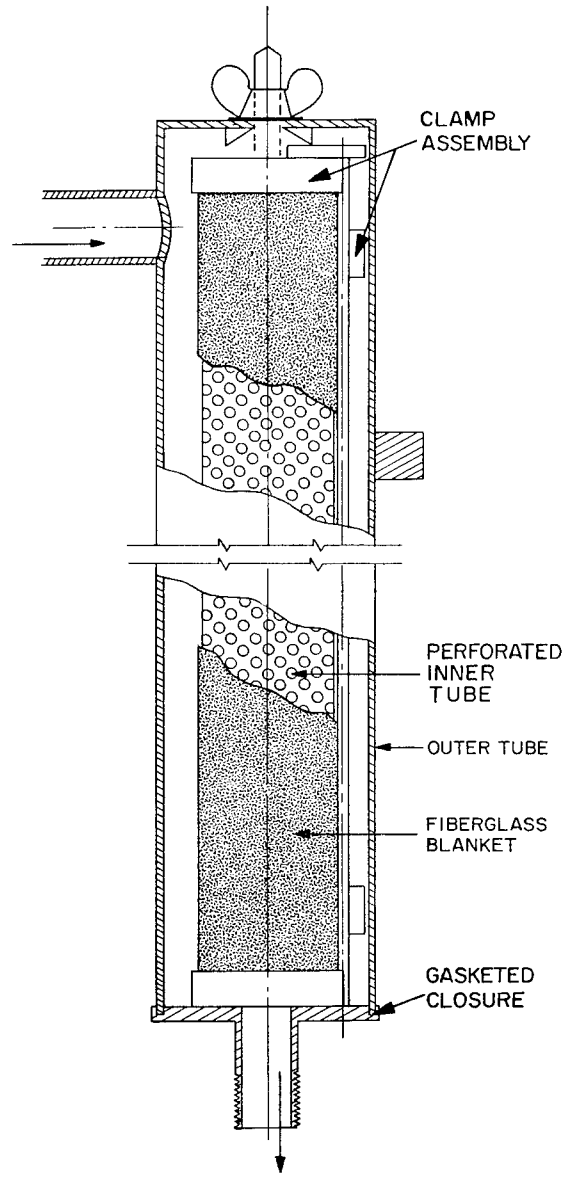

Fig. 4 - Modified NRL cylindrical filter assembly drawing

sliding it up over the perforated center tube. A spring around each end, functioning much like a garter, will retain the sleeve in place and seal its ends against leakage.

This sleeve type of filter has been tested at the Laboratory and has successfully filtered over 1700 cu ft of oxygen. The test was terminated by the fact that the annular space available for the buildup of the salt cake was virtually full, and there was no space left for the passage of gas. Now this "buildup of salt cake" brings a new feature to light! It was stated at the beginning of this report that the filter area had to be as great as possible because the salt cake would not pass gas at a low pressure differential; but with this new filter one can deposit salt to a considerable depth! The reason is that candle

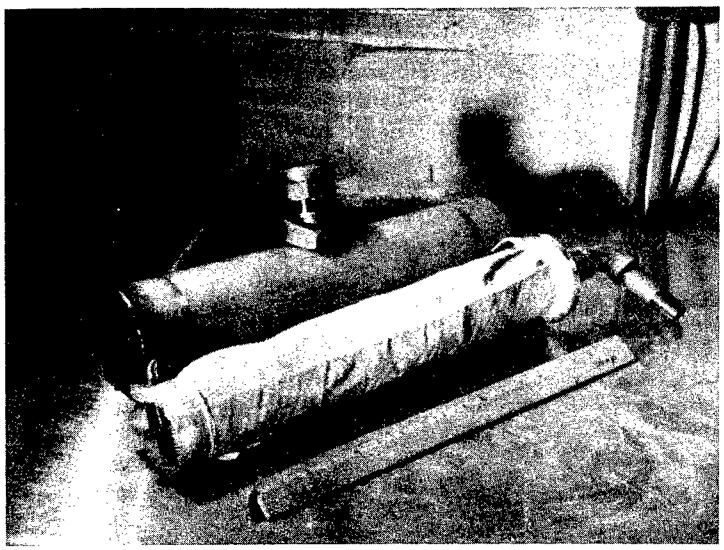

Fig. 5 - Modified NRL cylindrical filter assembly

manufacture has improved, and dry oxygen is being produced. As long as the salt cake is kept dry, it will pass gas readily. When the burner is secured and the filter left with salt on it, it will in all probability be clogged if candle burning is not resumed within a few hours; this would be because of moisture pick up from the surrounding atmosphere.

It is still possible and apparently quite feasible to retrieve a clogged filter element of this woven glass type by washing. If the central perforated tube part of the assembly is removed without disturbing the fiberglass sleeve, it can be held under a gentle stream of water, and all the salt cake can be rinsed away. As with previous designs, it is still necessary to dry the filter, but this is much easier than before because the woven fiberglass doesn't retain much water. It has been found that, if a filter is returned to service without drying, it will pass smoke for 6 to 8 minutes, at which time it will be dry enough to filter properly.

FUTURE PLANS AND RECOMMENDATIONS

It is thought that at last a practical filter design has been accomplished. However, sea trials have not yet been run. The supplier of woven glass sleeves, the Carolina Narrow Fabric Company, will provide 72 elements packaged in containers suitable for stowage aboard a submarine as well as for shipping. This packaging is a detail that requires attention because of the vulnerability of woven fiberglass cloth to wear by abrasion. Three submarines will then be provided with filters and a supply of filter sleeves for testing and evaluation.

Pending the outcome of sea trials it is recommended that the fiberglass sleeve filter design be adopted for candle burner use.

Security Classification

DOCUMENT CONTROL DATA - R&D

(Security classification of title, body of abstract and indexing annotation must be entered when the overall report is classified)

1. ORIGINATING ACTIVITY *(Corporate author)* U.S. Naval Research Laboratory Washington, D.C. 20390	2a. REPORT SECURITY CLASSIFICATION Unclassified 2b. GROUP

3. REPORT TITLE

FILTRATION OF SALT SMOKE FROM CHLORATE CANDLE OXYGEN

4. DESCRIPTIVE NOTES *(Type of report and inclusive dates)*

An interim report on one phase of the problem.

5. AUTHOR(S) *(Last name, first name, initial)*

Smith, S.H.
Musick, J.K.
Miller, R.R.

6. REPORT DATE February 11, 1965.	7a. TOTAL NO. OF PAGES 9	7b. NO. OF REFS

8a. CONTRACT OR GRANT NO. NRL Problem C08-05 b. PROJECT NO. SF-013-08-03, Tasks 4092, 4093, 4094, and 4095 c. d.	9a. ORIGINATOR'S REPORT NUMBER(S) NRL Report 6216 9b. OTHER REPORT NO(S) *(Any other numbers that may be assigned this report)*

10. AVAILABILITY/LIMITATION NOTICES

Unlimited availability – Copies available from CFSTI – $.50

11. SUPPLEMENTARY NOTES	12. SPONSORING MILITARY ACTIVITY Department of the Navy (Bureau of Ships)

13. ABSTRACT

Filtration of a sodium chloride aerosol in high concentration proved to be a continuing problem during the development of chlorate oxygen candles and their associated equipment for use on submarines. Rockwool-wire mesh combinations were first used in welded assemblies which were cleaned by water washing when they became clogged. The rockwool was later replaced with fiberglass blanket, and two modifications of the assembly were made, but the filter use remained inconvenient because of inadequate salt capacity.

A progressive step proved to be alteration of the assembly to use a throw-away fiberglass element and elimination of the washing operation. Further improvement was made possible by use of a woven replaceable fiberglass sleeve. The recently constructed assembly incorporating woven sleeve elements is to be subjected to sea trials as soon as possible.

DD FORM 1 JAN 64 1473

Security Classification

14. KEY WORDS	LINK A ROLE	LINK A WT	LINK B ROLE	LINK B WT	LINK C ROLE	LINK C WT
Aerosol filtration						
Inorganic aerosol						
Submarine habitability						
Fiberglass filters						
Oxygen-generation						
Sodium chlorate decomposition byproducts						

INSTRUCTIONS

1. ORIGINATING ACTIVITY: Enter the name and address of the contractor, subcontractor, grantee, Department of Defense activity or other organization *(corporate author)* issuing the report.

2*a*. REPORT SECURITY CLASSIFICATION: Enter the overall security classification of the report. Indicate whether "Restricted Data" is included. Marking is to be in accordance with appropriate security regulations.

2*b*. GROUP: Automatic downgrading is specified in DoD Directive 5200.10 and Armed Forces Industrial Manual. Enter the group number. Also, when applicable, show that optional markings have been used for Group 3 and Group 4 as authorized.

3. REPORT TITLE: Enter the complete report title in all capital letters. Titles in all cases should be unclassified. If a meaningful title cannot be selected without classification, show title classification in all capitals in parenthesis immediately following the title.

4. DESCRIPTIVE NOTES: If appropriate, enter the type of report, e.g., interim, progress, summary, annual, or final. Give the inclusive dates when a specific reporting period is covered.

5. AUTHOR(S): Enter the name(s) of author(s) as shown on or in the report. Enter last name, first name, middle initial. If military, show rank and branch of service. The name of the principal author is an absolute minimum requirement.

6. REPORT DATE: Enter the date of the report as day, month, year; or month, year. If more than one date appears on the report, use date of publication.

7*a*. TOTAL NUMBER OF PAGES: The total page count should follow normal pagination procedures, i.e., enter the number of pages containing information.

7*b*. NUMBER OF REFERENCES: Enter the total number of references cited in the report.

8*a*. CONTRACT OR GRANT NUMBER: If appropriate, enter the applicable number of the contract or grant under which the report was written.

8*b*, 8*c*, & 8*d*. PROJECT NUMBER: Enter the appropriate military department identification, such as project number, subproject number, system numbers, task number, etc.

9*a*. ORIGINATOR'S REPORT NUMBER(S): Enter the official report number by which the document will be identified and controlled by the originating activity. This number must be unique to this report.

9*b*. OTHER REPORT NUMBER(S): If the report has been assigned any other report numbers *(either by the originator or by the sponsor)*, also enter this number(s).

10. AVAILABILITY/LIMITATION NOTICES: Enter any limitations on further dissemination of the report, other than those imposed by security classification, using standard statements such as:

(1) "Qualified requesters may obtain copies of this report from DDC."

(2) "Foreign announcement and dissemination of this report by DDC is not authorized."

(3) "U. S. Government agencies may obtain copies of this report directly from DDC. Other qualified DDC users shall request through _____."

(4) "U. S. military agencies may obtain copies of this report directly from DDC. Other qualified users shall request through _____."

(5) "All distribution of this report is controlled. Qualified DDC users shall request through _____."

If the report has been furnished to the Office of Technical Services, Department of Commerce, for sale to the public, indicate this fact and enter the price, if known.

11. SUPPLEMENTARY NOTES: Use for additional explanatory notes.

12. SPONSORING MILITARY ACTIVITY: Enter the name of the departmental project office or laboratory sponsoring *(paying for)* the research and development. Include address.

13. ABSTRACT: Enter an abstract giving a brief and factual summary of the document indicative of the report, even though it may also appear elsewhere in the body of the technical report. If additional space is required, a continuation sheet shall be attached.

It is highly desirable that the abstract of classified reports be unclassified. Each paragraph of the abstract shall end with an indication of the military security classification of the information in the paragraph, represented as *(TS)*, *(S)*, *(C)*, or *(U)*.

There is no limitation on the length of the abstract. However, the suggested length is from 150 to 225 words.

14. KEY WORDS: Key words are technically meaningful terms or short phrases that characterize a report and may be used as index entries for cataloging the report. Key words must be selected so that no security classification is required. Identifiers, such as equipment model designation, trade name, military project code name, geographic location, may be used as key words but will be followed by an indication of technical context. The assignment of links, roles, and weights is optional.