UNCLASSIFIED

FR-2677

CONFIDENTIAL

Serial No. 37

Navy Department - Office of Research and Inventions

NAVAL RESEARCH LABORATORY
WASHINGTON 20, D. C.

* * *

CHEMISTRY DIVISION - PROTECTIVE CHEMISTRY SECTION

30 October 1945

The Preparation of S-330

By

Arthur J. Stokes
Homer W. Carhart
Peyton C. Teague

Report No. P-2677

CONFIDENTIAL

DECLASSIFIED: By authority of 5000A January 1958 Entered by: E. Bliss Code 2027

* * *

Approved by:

W. C. Lanning, - Head, Protective Chemistry Section

Dr. P. Borgstrom
Superintendent, Chemistry Division

Commodore H. A. Schade, USN
Director, Naval Research Laboratory

Preliminary Pages ---	a-c
Numbered Pages ------	45
Appendices----------	4
Tables ----------	19
Distribution List----	d

NRL Problem P-60
EAB

ABSTRACT

The first part of this report describes the development of a method for the preparation of S-330 in the laboratory. The second part deals with the production of S-330 on a small pilot plant scale. The work was undertaken to develop a process suitable for large scale production of S-330 and to prepare a quantity of this material for experimental use.

The principal steps involved in the production of S-330 consist of (a) preparation of benzil from benzaldehyde through the benzoin condensation followed by oxidation with nitric acid; (b) condensation of the benzil with guanidine carbonate; (c) separation of the condensation products by precipitation from a solution of their hydrochlorides at various controlled pH values and (d) controlled chlorination of the S-330 base to yield pure S-330.

A total of one hundred and seven runs was made in the pilot plant. Operating conditions and plant design were modified until good yields of a high quality product were obtained. A total of approximately 4000 pounds of S-330 was produced by the guanidine carbonate process. A few experimental runs were made using guanidine nitrate in place of guanidine carbonate.

UNCLASSIFIED

CONFIDENTIAL

Table of Contents

Subject	Page No.
ABSTRACT	b
INTRODUCTION	1
A. Authorization	1
B. Statement of the Problem	1
C. Known Facts Bearing on the Problem	1
D. Theoretical Considerations	2
E. Previous Work Done at This Laboratory	4
EXPERIMENTAL	4
Part I. Laboratory Development	4
Introduction	4
A. Condensation of Benzil with Guanidine Salts	5
1. Effect of Solvent	6
2. Effect of Temperature	8
3. Effect of Different Salts of Guanidine	10
4. Other Factors	12
B. Separation of the Condensation Products	13
1. Fractional Crystallization	13
2. Extraction Process	13
3. pH Control Process	13
C. Chlorination of S-330 Base	15
1. Preliminary Work	15
2. Effect of pH	16
3. Effect of Temperature	20
Part II. Pilot Plant Development	21
Introduction	21
A. Description of the Pilot Plant	21
B. Production of Benzil	23
1. Benzoin Condensation	23
2. Nitric Acid Oxidation of Benzoin	25
C. Condensation of Benzil with Guanidine Carbonate	27
D. Separation of the Condensation Products	30
E. Chlorination of S-330 Base	31
1. Suspension Chlorination	31
2. Solution Chlorination	32
F. Drying of S-330 Powder	36
G. Operational Control and Analyses	37
H. Micronizing of S-330 Powder	39
I. Preparation of S-330 Powder from Guanidine Nitrate	40
SUMMARY AND CONCLUSIONS	42
RECOMMENDATIONS	44
ACKNOWLEDGMENT	45
APPENDICES A, B, C and D.	

CONFIDENTIAL

UNCLASSIFIED

INTRODUCTION

A. Authorization

1. This work was authorized under Project 547/41, "Maintenance, Bureau of Ships", dated 16 December 1940. The problems which were proposed for study were given in Bureau of Ships letter S-S77-2(Dz), Serial No. 811, of 17 December 1940.

B. Statement of Problem

2. This study was undertaken to develop a method for producing S-330 of high quality on a large scale.

C. Known Facts Bearing on Problem

3. Wense[1], in 1886, reported a reaction between benzil and guanidine carbonate in alcohol. Equimolar quantities of benzil and guanidine (as carbonate) yielded a white product which was considered to have the structure (a), whereas two moles of guanidine (as carbonate) yielded a second product which was considered to have the structure (b).

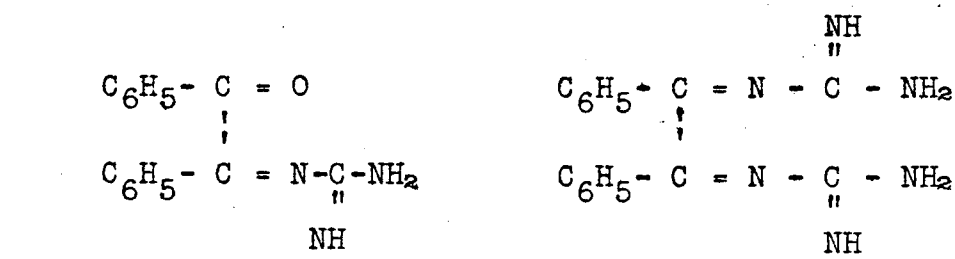

(a) (b)

4. In 1894 Michael[2] obtained a white solid by reacting benzil and free guanidine in alcoholic solution. The structure (a) was assigned to the compound.

1. - Wense, Ber. 19, 761 (1886)
2. - Michael, J. prakt. Chem., (2) 49, 43 (1894).

UNCLASSIFIED

5. Early work at this Laboratory showed that the condensation of benzil and guanidine darbonate yielded a mixture of substances which would have to be separated if S-330 of high purity were to be obtained.

D. Theoretical Considerations.

6. The original interest in S-330 was for use as an impregnite for protective clothing. One of the deficiencies of impregnites in protective clothing is that they cause tendering of cotton cloth during storage and weathering. This tendering has been attributed to the formation of HCl from the decomposing impregnite. Therefore it has been necessary to add some basic substance to react with the HCl without at the same time causing instability of the impregnite. Zinc oxide is one of the best such agents. An impregnite having basic groups in its structure should show a protective effect on the cloth similar to that of the zinc oxide. The compound S-330 was developed in an attempt to produce such an impregnite.

7. S-330 is the 1,3,4,6-tetrachloro derivative of 2,5-diimino-7,8-diphenyl-glycoluril. The 2,5-diimino-7,8-diphenyl-glycoluril (I), referred to in this report as S-330 base, is formed by the condensation of one mole of benzil with two moles of guanidine (as a salt) according to the following equation:

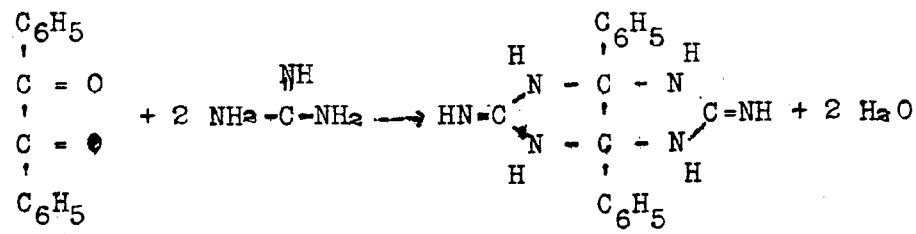

(I)

8. Accompanying this reaction is the condensation of one mole of benzil with one mole of guanidine (as a salt) according to the following equation:

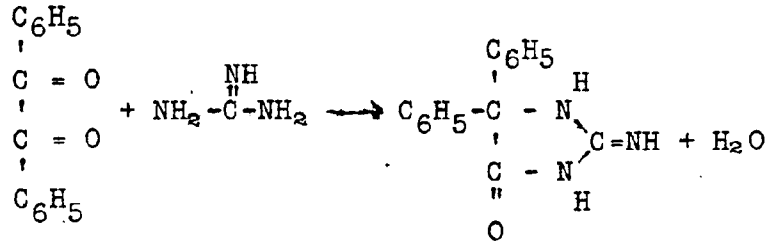

(II)

The product (II) is 5,5-diphenyl-2-iminohydantoin and is referred to in this report as S-222 base. The ratio of yields of (I) and (II) is influenced markedly by the conditions of the condensation, for example a strongly basic medium favors the formation of (II). Small amounts of other, unidentified products are also formed during the condensation.

9. Chlorination of the S-330 base (I) produces either the tetrachloro-derivative, which contains 33.0% active chlorine, or the hexachloro-derivative, in which both imino groups are also chlorinated and which contains 42.6% active chlorine. Since the chlorine atoms attached to the imino nitrogens are more labile than those attached to the other nitrogens, the hexachloro compound is considerably more unstable than the tetrachloro derivative, so that the presence of any amounts of the hexachloro compound in the finished product is undesirable. It is necessary, therefore, to obtain only the tetrachloro-derivative, S-330. The chlorination of S-330 base is shown by the following equation:

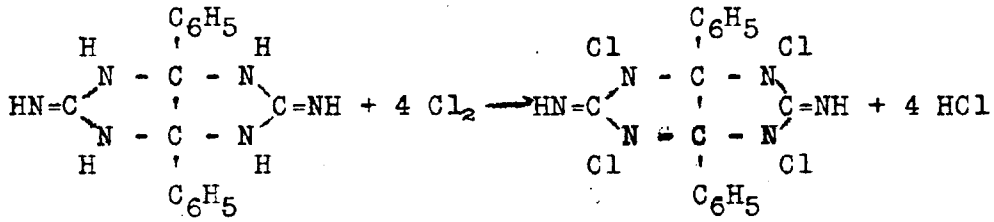

10. The objectives of this study are: (1) to obtain the optimum ratio of S-330 base to S-222 base, (2) to effect a separation of the products to yield pure S-330 base, and (3) to chlorinate the S-330 base to the tetrachloro-derivative only.

E. Previous Work Done at This Laboratory.

11. A number of chloroamides were studied with reference to their suitability as impregnites in protective clothing and were reported in NRL Report No. P-1867, "Investigation of Chloroamides for Use on Protective Clothing", dated 27 April 1942.

12. Some preliminary experiments on S-330 were reported in NRL Memorandum S-S77-2(459-HWC/GMG/WHT), Serial No. 949, dated 19 November 1942.

EXPERIMENTAL

Part I - Laboratory Development

Introduction

13. In September 1941, work was begun at this Laboratory on the preparation of S-330. The original preparation of this compound was made by Mr. J. C. Speck who condensed benzil with an alcoholic solution of free guanidine (prepared by reacting guanidine nitrate with sodium ethylate and filtering the precipitated sodium nitrate). Development of the guanidine carbonate method resulted in increased yields of the desired base and a simplification of the procedure. In the early stages of this work, the separation of the mixture obtained in the condensation proved to be troublesome and a considerable amount of work was done with material which was shown later to be impure.

14. The preparation of S-330 is readily divided into three parts, namely, (1) the condensation of benzil with guanidine salts, (2), the separation of the condensation products and (3) the chlorination of the purified S-330 base. Experimental data in this report are presented and discussed in this order.

A. Condensation of Benzil with Guanidine Salts.

15. The condensation of benzil with guanidine salts occurs under various conditions to yield different ratios of products. From the crude mixture obtained in the condensation, four fractions have been separated, namely (1) a fraction insoluble in hydrochloric acid, (2) S-222 base (3) a fraction designated "pH8" (since it is precipitated from a hydrochloric acid solution of the condensation mixture which has been adjusted to a pH of 8), and (4) S-330 base. The composition of the insoluble fraction is unknown but some unreacted benzil is present. S-222 base is formed by the reaction of benzil with one molecule of guanidine and involves a benzilic acid type of rearrangement. The exact composition of the "pH8" fraction is unknown. (Preliminary work has indicated the presence of a complex condensation product of benzil and guanidine). Existence of this fraction was not recognized during the early work. Consequently some of the yields of S-330 base and S-330 given in this report contain "pH8" fraction and chlorinated "pH8" fraction respectively. The yields given are correspondingly high.

16. Investigation at this Laboratory has led to the following procedure as probably the most convenient and satisfactory for the condensation reaction.

17. Ninety-five percent ethyl alcohol is used as the solvent in the ratio of one liter of alcohol to one mole of benzil. Guanidine, in the form of the carbonate, is used in the ratio of 2.2 moles of guanidine to one mole of benzil. The alcohol, benzil, and guanidine carbonate are placed in a reaction vessel fitted with a reflux condenser and an efficient stirrer. The temperature is raised to 70°C, and maintained at 70°C, for four hours with stirring. The reaction mixture is then cooled, filtered, and the products separated.

18. In a typical laboratory preparation the following yields were obtained from three moles (630 gms.) of benzil and 3.3 moles (594.5 gms.) of guanidine carbonate (this is equivalent to 6.6 moles of free guanidine).

Table I

Yields of Fractions from Condensation Reaction

	Wt.	% Yield
Insoluble fraction	60 gms.	-
S-222 base	119 gms.	-
"pH8" fraction	17 gms.	-
S-330 base	635 gms.	72

19. Factors having a considerable effect on the ratio of products obtained in the condensation are (a) solvent, (b) temperature, and (c) type of guanidine salt used. In the early part of this work it was found that yields of S-330 base obtained by using guanidine carbonate in the condensation were considerably better than yields from other guanidine salts. Emphasis at this Laboratory has therefore been placed on the development of the carbonate process.

(1) Effect of Solvent.

20. A number of solvents were tried for the benzil-guanidine carbonate condensation but few proved to be of any value. In methyl cellosolve, benzene, acetone, or acetic acid, either a gummy mass which yielded no S-330 base resulted, or no reaction occurred. Fusion of the benzil with guanidine carbonate yielded only 14% of the S-330 base and 8% of the S-222 base.

21. Ninety-five percent ethanol was found to be the most satisfactory solvent. The use of more dilute alcohol decreased the yield of S-330 base and increased the yield of S-222 base. A few experiments made with absolute ethanol indicated that this solvent gave slightly higher yields of S-330 base. However, this work was done before the existence of the "pH8" fraction was recognized. Adkins[3] reports lower yields with absolute ethanol than with 95% ethanol.

[3]-H. Adkins, "The Preparation of S-330 and Related Compounds", OSRD Report No. 4591 dated January 19 1945.

LIBRARY
NAVAL RESEARCH LABORATORY

22. In early work, methanol appeared to give considerably higher yields of S-330 base than ethanol. However, chlorination of the base from methanol preparations always produced a chloroamide of poor stability. Later work showed that this material contained a high percentage of the "pH8" fraction, and that the yield of S-330 base was actually quite low.

23. Isopropanol was found to give good yields in the benzil-guanidine carbonate condensation. However, no attempt was made to recheck the yields in isopropanol after the "pH8" fraction was recognized.

24. Denatured alcohol containing methanol was found to give yields of S-330 base comparable to those obtained from undenatured ethanol. Results obtained from different solvents are shown in Table II.

Table II

Effect of Solvent on Condensation Reaction

Solvent	l./mol. of Benzil	Heating Time	Temp.	Yield, % of Theoretical* Insol.	S-222 Base	"pH8"	S-330 Base
Methanol	1	5.5 hrs.	Reflux.	0	13	31	49
Ethanol	1	4.0 hrs.	70°	9	16	2	72
Isopropanol	1	5.0 hrs.	Reflux.	2	27	-	61(?)

* The yields are calculated as the percentage of the total benzil converted to the given end product according to the reactions given in paragraphs 7 and 8 for S-222 base and S-330 base. The insoluble fraction is assumed to be pure benzil for the purposes of these calculations. During the early stages of the condensation reaction the insoluble fraction is mostly benzil but as the reaction continues a progressively smaller amount of benzil can be recovered from it. The composition of the "pH8" fraction is unknown. Analytical studies have shown it to be a heterogeneous substance in which the ratio of benzil to guanidine fragments is variable depending on a number of factors sudh as solvent, time of heating, etc. Nitrogen analyses indicate an average ratio of approximately 2 benzil fragments to 3

guanidine fragments. However, for the purposes of calculating yields a ratio of 1 benzil to 2 guanidine is used. In view of the unknown exact composition of 2 out of the 4 products isolated from the condensation reaction, a summation of yields obtained is only an approximation in accounting for the benzil used.

(2) Effect of Temperature.

25. Temperature has a marked effect on the course of the reaction of benzil and guanidine salts. High temperatures favor the formation of S-222 base whereas low temperatures favor the formation of S-330 base. However, the use of low temperatures to increase the yield of S-330 base is restricted in practical application by the slow rate of raction. The data presented in Table III show yields of S-222 base and S-330 base obtained from benzil and guanidine carbonate in 95% ethanol at various temperatures.

Table III

Effect of Temperature on Condensation Reaction

Temp.	Time of Heating	% S-330 Base (A)	% S-222 Base (B)	Ratio A:B
100°C (bomb)	13 Hrs.	38	40	0.95
78° (reflux)	3 "	66	28	2.36
70°	3.5 "	73	16	4.56
60°	9 "	72	12	6.00
50°	45 "	66	7	9.43
40°	75* "	27	5	-
30°	7 days*	18	0	-

* Reaction incomplete.

26. A reaction rate study of the condensation of benzil with guanidine carbonate in 95% ethanol at reflux temperature showed that the reaction to form S-330 occurred very rapidly. On prolonged heating the yields of S-330 base tended to decrease somewhat. Data obtained from the condensation of 3.0 mols. of benzil with 6.6 mols. of guanidine (as carbonate) in 3 liters of 95% ethanol are presented in Table IV and

are shown graphically in Plate 8 of Appendix C. Two to three hundred gram samples were taken from the refluxing mixture at the indicated times and were separated. Zero time was taken when the guanidine carbonate was added to the refluxing alcoholic solution of benzil.

Table IV

Condensation Reaction Rate at Reflux

Time	Yield, % of Theoretical			
	Insoluble	S-222	"pH8"	S-330
5 min.	78.8	0	4.5	17.4
38 "	20.4	0(?)	14.1(?)	65.8
1 hr.	7.4	22.8	4.7	66.0
2 "	3.2	26.4	5.0	65.5
3 "	2.7	27.8	8.7	61.0
4 "	3.0	28.0	10.4	58.5
5 "	3.0	27.4	7.4	62.0
6 "	3.1	30.0	9.7	58.5
7 "	3.7	29.4	10.0	57.0
8 "	3.0	27.6	10.8	58.5

27. Another three mole run was made at 60°C., and the course of the reaction was followed by withdrawing samples at the indicated times. The data obtained are presented in Table V and are shown graphically in Plate 9 of Appendix C. At lower temperatures the yields of S-222 base are substantially decreased.

Table V

Condensation Reaction Rate at 60°C

Time (Hrs.)	Yield, % of Theoretical			
	Insoluble	S-222	"pH8"	S-330
0.3	88.8	0	3.7	4.7
0.7	83.8	0	1.3	14.4
1.4	74.0	0	3.3	23.7
2.3	68.4	0	2.3	30.6
3.2	59.0	2.3	3.8	36.5
4.3	49.8	2.2	4.9	43.0
5.2	40.5	2.8	4.4	49.1
7.3	23.7	6.0	3.9	61.0
9.3	14.3	5.3	6.1	67.7
12.3	8.7	12.5	2.0	71.7
24.6	4.4	8.5	1.4	69.8
30.3	4.0	14.5	1.6	71.0

28. In a third run, made at 50°C, the volume of ethanol was increased to 1.5 liters per mole of benzil. The data obtained in this run are presented in Table VI and are shown graphically in Plate 10 of Appendix C. The "pH8" fraction was not separated in this experiment and is included with the S-330.

Table VI

Condensation Reaction Rate at 50°C.

Time (Hrs.)	Yield, % of Theoretical		
	Insoluble	S-222	S-330 (+ "pH8")
24	43.5	3.9	43.3
45	11.9	7.2	66.2
48	9.3	6.1	66.0
72	7.7	11.2	68.9

From the data in Tables IV to VI and from Plates 8-10
in Appendix C, it is indicated that higher yields of S-330 base and lower yields of S-222 base are produced at lower temperatures. However, the time required to reach a maximum yield is much greater at the lower temperatures. Thus a maximum yield of 66% of S-330 base was obtained in less than one hour at 79-80°C., a yield of 71% was obtained in 12 hours at 60°C and 69% in 72 hours at 50°C (when the experiment was discontinued). As will be brought out later, it was shown in pilot plant work that 70°C is probably the most desirable temperature for obtaining the best yields in a time short enough to be practical.

(3) Effect of Different Salts of Guanidine.

29. Early work at this Laboratory showed that guanidine nitrate would not condense directly with benzil in either ethyl or methyl alcohol. However, it was found that when an equimolar quantity of sodium carbonate was added to the guanidine nitrate in alcoholic suspension, the condensation took place. Results obtained using guanidine nitrate were less satisfactory than those obtained using guanidine carbonate since the reaction was considerably slower and the yields less. In a typical experiment one mole

of benzil, 2.5 moles of guanidine nitrate, 1.25 moles of sodium carbonate, and 2 liters of 95% ethanol were refluxed, with stirring, until the color of the mixture changed from a bright to a pale yellow. This required about 11 hours. A yield of 53 percent of S-330 base and 24 percent of S-222 base was obtained. It was found in a similar experiment that a stream of CO_2 bubbled through the reaction mixture in ethanol increased the yield to approximately 67 percent.

30. Since early work indicated that better results were obtained from guanidine carbonate no extensive work was done on the nitrate process at this Laboratory. Adkins and his co-workers at the University of Wisconsin and at Merck and Co., have developed the nitrate process to give good yields of S-330 base using isopropanol in place of ethanol as the solvent.

31. Reaction rate data obtained in the condensation of 3.35 mols of benzil, 7.68 mols of guanidine nitrate and 3.84 mols of sodium carbonate in 2.5 liters of isopropanol at 65°C are presented in Table VII and are shown graphically in Plate 11 of Appendix C. Air was passed over the reaction mixture at the rate of 200 ml. per minute.

Table VII

Condensation Reaction Rate Using Guanidine Nitrate

	Yield, % of Theoretical			
Time (Hrs.)	Insoluble	S-222	"pH8"	S-330
1.0	72.8	0	0.1	0.2
3.5	45.6	0	0.6	30.7
6.0	31.4	0.9	1.0	33.6
8.5	26.8	2.9	2.1	51.4
11.0	21.5	3.5	1.5	56.6
13.5	19.1	3.6	1.7	60.5
16.0	16.0	4.0	1.5	62.6
23.5	10.9	-	5.8	63.8

A comparison of the data in Tables V and VII show that in the carbonate process at 60°C a maximum yield of 71% was obtained in 12 hours whereas in the nitrate process at 65°C a maximum yield of 64% was obtained in 23 hours.

32. Other guanidine salts have been tried in the condensation without appreciable success. Little or no condensation occurred when benzil was refluxed in alcohol with guanidine acetate or guanidine hydrochloride. Free guanidine was found to condense with benzil in alcohol. The initial investigations at this laboratory were made with free guanidine prepared by treating the nitrate with sodium ethoxide. However, the results were not satisfactory since the principal product was S-222 base.

(4) Effect of Other Factors.

33. In the experiments described, an excess of guanidine salt is used in every case. The amount of guanidine required for the S-330 base condensation should be somewhat less than the theoretical, since part of the guanidine reacts to form S-222 base which contains only one guanidine residue. However, attempts to lower the amount of guanidine salt appreciably have led to decreased yields. (This is partly due to the low solubility of guanidine carbonate in ethanol, resulting in undissolved guanidine carbonate remaining in the reaction mixture). It was found that slightly smaller quantities of guanidine carbonate could be used if the material were finely ground.

34. Addition of the benzil or guanidine salt portionwise during the course of the condensation did not increase the yield of S-330 base.

35. Attempts to buffer the reaction mixture with phosphates or borates were unsuccessful in increasing the yields. A stream of CO_2, nitrogen, or air blown through the reaction mixture improved the yield of S-330 base in the nitrate preparation, probably by removing ammonia, but did not affect the yields in the carbonate preparation.

36. In early preparations, the reaction mixture was heated until the bright yellow color of the benzil had disappeared. Reaction rate studies showed that the maximum yield of S-330 base was obtained long before the disappearance of the yellow color. Subsequent heating only increased the yield of S-222 base and

"pH8" fraction and decreased the yield of S-330 base.

B. Separation of the Condensation Products of Benzil and Guanidine Salts.

(1) Fractional Crystallization.

37. The first attempts to purify the condensation products of free guanidine and benzil were by fractional crystallization from ethanol. This process was slow and unsuitable for large scale work and was discarded in favor of an extraction process.

(2) Extraction Process.

38. It was found that the S-330 base could be extracted from the condensation mixture by a dilute aqueous solution of acetic acid. The mixture was extracted with a hot 5% solution of acetic acid, filtered, and the S-330 base precipitated from the cooled filtrate by the addition of excess sodium hydroxide. This procedure was effective in removing the S-222 base and other products insoluble in dilute acetic acid. The method was unsatisfactory on large scale work however, since a considerable volume of acetic acid was required and two or more extractions were necessary for efficient removal of the S-330 base from the mixture.

(3) pH Control Process.

39. A considerable improvement over the extraction process was made when it was found that both the S-222 base and the S-330 base could be dissolved in dilute hydrochloric acid and precipitated separately at different pH values. Sodium acetate was found to be a good precipitating agent for the S-222 base since the S-222 base is insoluble at a pH of 3.5 or higher. In practice, concentrated sodium acetate was added to the hydrochloric acid solution of the condensation products until further addition caused no more precipitation. The S-222 base was filtered off and the S-330 base precipitated by addition of excess concentrated sodium hydroxide to the filtrate.

40. Electrometric titration curves run on the crude

condensation mixture indicated that another fraction could be obtained which precipitated in the range of pH 6 to 8. This fraction was named "pH8" since it was completely precipitated at this pH. In the normal guanidine carbonate condensation, this material is present in only a small amount relative to the S-222 base and S-330 base concentrations. A number of early preparations of S-330 base, particularly in methanol, were later shown to contain considerable amounts of the "pH8" fraction. A typical titration separation curve from the guanidine carbonate condensation is shown in Plate 12 of Appendix C. The major portion of the alkali added between a pH of 4.0 and 8.0 (see Plate 12) was required to neutralize the first H+ of the S-330 base dihydrochloride and very little precipitate ("pH8" fraction) actually formed.

41. The best procedure found at this Laboratory for the separation of the benzil-guanidine carbonate condensation mixture is described in the following paragraph:

42. The filtered precipitate from a one mole condensation is suspended with vigorous agitation in two liters of water. Concentrated hydrochloric acid is added slowly until the foaming stops. The volume is made up to four liters with water and the pH adjusted to 1.5 - 2.0 with hydrochloric acid. The insoluble fraction is filtered and 10% sodium hydroxide is added slowly to the filtrate with vigorous stirring until a pH of 4 is obtained. The S-222 base is completely precipitated at this point and is filtered off. Addition of sodium hydroxide is continued until a pH of 7.8 - 8.0 is obtained. The "pH8" fraction is filtered and the filtrate made strongly alkaline by the addition of excess sodium hydroxide. The precipitated pure S-330 base is filtered, washed, and dried. When only the S-330 base is desired, the pH is adjusted to 8 in one step and the insoluble, S-222 base, and "pH8" fractions are removed in one filtration.

43. Adkins has recommended the use of ammonium hydroxide to adjust the pH to 8. This is very convenient in that no localized precipitation of S-330 base occurs and the end-point is not critical. The ammonium hydroxide

method is unsuitable, however, in the direct chlorination process where the S-330 base is not isolated.

C. Chlorination of S-330 Base.

(1) Preliminary Work.

44. The chlorination of S-330 base by passing chlorine gas into aqueous suspensions of the base seemed to offer the best possibilities for controlled chlorination. This method was investigated with the object of developing a process for preparing pure S-330 on a large scale.

45. A number of preliminary runs, made over a wide range of conditions, indicated that the pH of the liquid phase was a vital factor affecting the degree of chlorination of the base. In strongly acid solutions the chlorination apparently went very slowly or not at all. Similar results were obtained in strongly alkaline solutions, the products isolated being very low in chlorine content and highly colored. To maintain a suitable pH during chlorination by neutralization of the HCl formed, three basic substances were tried, namely, sodium hydroxide, sodium bicarbonate, and sodium acetate. Sodium acetate was found to be the most convenient.

46. The slow chlorination in strongly acid solutions suggested a possible instability of the hexachloro-compound in solutions of low pH. It seemed likely that under proper conditions the hexachloro compound would lose two chlorine atoms and revert to S-330. Determination of the stability of the hexachloro compound in acid solution was attempted by shaking suspensions of the tetrachloro and the hexachloro compounds for 18 hours in hydrochloric acid solutions of various pH values. At the end of this time, the chloroamides were filtered, washed, and analyzed for active chlorine. No appreciable decrease in chlorine content was found for the hexachloro compound in solutions having a pH as low as 0.8. A slight increase was found in the chlorine content of the tetrachloro compound after suspension in dilute acid solutions. This is attributed to the solution

of a small amount of the mono-, di-, and trichloro compounds which apparently are present in the material, or a disproportionation of these compounds to S-330 and free base which then dissolves. Since the tetra- and hexachloro compounds were affected to no great extent by dilute acids, another series of tests was made in hydrochloric acid solutions of five, ten, fifteen, and twenty percent concentration. Both the tetra- and hexachloro compounds were found to be quite stable for short periods in acid solutions containing up to 10 percent hydrochloric acid. In solutions containing fifteen percent or more acid both compounds were found to undergo almost complete loss of chlorine. The material obtained after such treatment was generally red or brown in color and was apparently considerably decomposed. From this data, the use of acid for converting the hexachloro compound to the tetrachloro compound does not seem feasible since both compounds have nearly the same stability in strong acids and apparently lose either none or all of their chlorine.

(2) Effect of pH.

47. A series of experiments was carried out to determine the effect of pH of the solution on chlorination. These experiments were made with 0.1 mole quantities of S-330 base in one liter of water at room temperature. The pH of each suspension was adjusted to the required value at the start by the addition of hydrochloric acid and then maintained at this value throughout the chlorination by the dropwise addition of a twenty-five percent solution of either sodium hydroxide or sodium acetate. A glass electrode-calomel pH meter with the electrodes immersed in the reaction medium was used to follow the pH. Chlorine gas was bubbled through the reaction mixture at a rate greater than the suspension absorbed it. The suspension was stirred vigorously during the entire reaction. Samples of the mixture were filtered at intervals and the precipitate analyzed for active chlorine. The results of these experiments are presented in Table VIII.

Table VIII

Chlorination of S-330 in Solutions of Different pH Values (25-30°C)

Expt. No.	pH	Min.	Total Mols. of Alkali Added	% Cl+
1	10	0	0.(NaOH)	0
		38	0.4	15.72
		61	0.8	20.82
		79	1.2	22.00
		93	1.6	22.40
2	8	0	0.(NaOH)	0
		24	0.4	26.37
		34	0.6	28.25
		42	0.8	29.90
		59	1.1	31.70
		73	1.4	33.12
3	6	0	0.(NaOH)	0
		15	0.4	19.30
		28	0.6	25.64
		43	0.8	30.04
4	4	0	0.(NaOAc)	0
		10	0.1	16.18
		20	0.3	26.30
		40	0.6	31.45
5	2	0	0.(NaOAc)	0
		7	0.2	24.00
		21	0.3	28.40
		31	0.4	29.70

48. At a pH of 10 or over the chlorination of S-330 base proceeds slowly to yield a highly colored product of low active chlorine content. At lower pH values precipitates were obtained with an active chlorine content approaching the theoretical value even during the early stages of chlorination. Since at a pH of 8 or below, S-330 base is soluble, it follows that any precipitate which forms is composed largely of S-330. It would be expected that further addition of chlorine

would chlorinate S-330 base still in solution rather than the precipitate and hence the chlorine content of the precipitate increases slowly. The experiments described above were stopped before complete chlorination occurred. The effect of pH on the extent of chlorination is described in the following experiment.

49. 0.1 mol. of S-330 base was suspended in 1 l. of water and chlorinated at a pH value ranging from approximately 3 to 1 until a product having 31.20% active chlorine was obtained. One hour was required for chlorination. The mixture (pH 0.99) was divided into four portions which were neutralized with sodium acetate to pH values of 2, 3, 4, and 5 respectively. Chlorine was bubbled into each of these suspensions for one-half hour while the pH was kept constant by addition of sodium acetate solution. Chlorine determinations were then made on the products obtained. Data obtained are presented in Table IX.

Table IX

Effect of pH on Extent of Chlorination

Run	Original % Cl+	Neutralized to pH	Final % Cl+
1	31.20	2	31.30
2	31.20	3	31.70
3	31.20	4	31.40
4	31.20	5	39.70

50. The data in Table IX show that at a pH of 2-4 no further chlorination occurred, whereas at a pH of 5 a large amount of the hexachloro compound was formed.

51. In another experiment chlorination of 0.1 mole of S-330 base in 1 liter of water at a pH of 5 to 6 yielded the hexachloro compound. (0.8 mole of sodium acetate was required to hold the pH constant). The data is presented in Table X.

Table X

Chlorination of S-330 Base at pH 5-6.

Time (Min.)	30	45	60	105	135	180
% Cl+ in ppt.	23.65	27.70	31.90	38.65	40.60	40.70

52. The low rate of chlorination of S-330 base in strongly acid solutions (pH 0.5 or less) suggested the possibility of chlorinating a suspension of the base in water without adding alkali to control the pH during the reaction. Liberation of hydrochloric acid in the chlorination process would rapidly lower the pH below the critical level at which the hexachloro compound formed, and only the tetrachloro compound would be obtained. This was shown to be true by chlorinating a suspension of 0.1 mole of S-330 base in 1 liter of water without controlling the pH. A glass-electrode-calomel pH meter with electrodes immersed in the suspension was used to follow the change in pH during the reaction. The pH was found to drop rapidly as the chlorination progressed and approached a minimum value of about 0.8 in the experiments conducted. Samples of suspension were withdrawn at intervals and the active chlorine of the precipitate determined. The maximum chlorine content obtainable under these conditions was about 30 percent. Data from a typical experiment are presented in Table XI and are shown graphically in Plate 13 of Appendix C.

Table XI

Chlorination with No Control of pH

Time (Min.)	0	5	10	15	20	25	30	40	55
pH	9.60	4.75	1.64	1.17	0.99	0.90	0.88	0.84	0.82
%Cl+ in ppt.	0	9.92	21.90	27.80	29.88	29.92	29.92	29.60	29.90

53. The data above show that S-330 can be obtained readily by direct chlorination of S-330 base without pH control during the reaction.

(3) Effect of Temperature.

54. To determine the effect of temperature on the chlorination of S-330 base 0.1 mole quantities of S-330 base were suspended in 1 liter of water and chlorinated at 0°C., 25°C., and 40°C. The absorption rate of chlorine was found to be somewhat increased at lower temperatures, and the resulting product slightly higher in active chlorine content. The difference, however, between chlorination at 25°C. and chlorination at 0°C did not appear to be of any significance or value from a production standpoint. At 40°C the rate of chlorination was decreased considerably below that at 25°C indicating that the chlorination should not be carried out above room temperature. The results of these experiments are presented in Table XII and are shown graphically in Plate 14 of Appendix C.

Table XII

Effect of Temperature on Chlorination of S-330 Base

0°C.			25°C.			40°C.		
Time	pH	% Cl+	Time	pH	% Cl+	Time	pH	% Cl+
0	9.47	0	0	9.60	0	0	9.20	0
10	1.25	29.20	5	4.75	9.92	10	9.12	0.68
20	0.85	30.00	10	1.64	21.90	20	9.10	4.53
30	0.78	30.42	15	1.17	27.80	30	8.92	8.89
40	0.75	31.95	20	0.99	29.88	40	8.54	10.65
50	0.75	-	25	0.90	29.92	50	8.26	14.02
60	0.75	31.91	30	0.88	29.92	60	8.05	15.71
90	0.74	31.90	35	0.86	29.91	90	7.30	19.67

55. When pilot plant work was begun, chlorinations were made using suspensions of S-330 base without pH adjustment or control. The rate of chlorination of the base was very inconsistent and frequently extremely slow. This was apparently due to the formation of a coating of the insoluble S-330 on the particles of undissolved base, thereby preventing further solution of the base.

56. To avoid these difficulties experiments (described in Part II) were made on chlorination of solutions of S-330 base dihydrochloride. It was found

that a dilute solution of S-330 base dihydrochloride gave an instantaneous precipitate of S-330 when poured into saturated chlorine water. The active chlorine content of the S-330 was very nearly the theoretical value. The volumes required for this operation were, however, prohibitive for large scale work.

57. Solutions of the dihydrochloride of S-330 base were found to absorb chlorine gas rapidly when the chlorine was well dispersed by vigorous agitation. This was found to be the most satisfactory method of chlorination and was used in the majority of the pilot plant runs.

Part II - Pilot Plant Development.

Introduction.

58. Pilot plant production of S-330 was undertaken at this Laboratory to produce greater quantities of S-330 for experimental purposes and also to investigate the problems involved in plant production of this material.

59. Five hundred pounds of benzil was obtained from commercial sources and was converted into S-330 by the carbonate process. When the interest in S-330 for use in a protective ointment became greater it was necessary to increase the production. Benzil was unobtainable in large quantities from commercial sources at that time, so that it was prepared from benzaldehyde.

60. Pilot plant work at this laboratory was started early in May 1943. After several months of small scale experimental work, the production of S-330 was increased in November 1943 to about 300 pounds per week. This value was a maximum obtained in a week of full production on a 24 hour-six day basis. Pilot plant work was concluded in May 1944. In the period of operation from November 1943 to May 1944 approximately 4000 pounds of S-330 were produced.

A. Description of the Pilot Plant.

61. Drawings of the pilot plant are shown in Appendix A, Plates 1 - 7. Plate 1 shows a layout of the entire unit. The plant was built in two rooms because no room large enough to accommodate the entire

plant was available. Although commercially obtainable equipment was used for the most part, some special units such as the chlorinator were made in the laboratory shop. Other units such as the large multiple tube condenser, the benzoin reactor, and the benzoin oxidizer also were built in the shop because of their immediate need and the delay in obtaining such equipment on the market. Plate 2 is a flow sheet of the guanidine carbonate process. Plates 3 through 7 show the individual units in the plant.

62. A brief description of the general process used is given below. More detailed descriptions of the individual steps are given later.

63. Benzoin was produced from benzaldehyde by the benzoin condensation. This reaction was carried out in a 100 gallon steel tank with immersion steam heating coils and propellor agitator. The thick slurry was run out by gravity into a suction filter of 3.5 cu. ft. solid capacity and after washing with alcohol and water, was oxidized to benzil with nitric acid. The filtrate from the benzoin condensation was reused by adjusting the ethanol and sodium cyanide concentrations.

64. The benzoin was oxidized with hot 40-45% nitric acid in a 40 gallon jacketted ceramic crock. Oxides of nitrogen evolved in this reaction were absorbed in a 6 ft. ceramic-packed spray tower. Cyclic heating and cooling of the ceramic reactor were eliminated by siphoning the molten benzil through an electrically heated siphon pipe into hot water for washing and crystallization. A fifty gallon wooden barrel was used to wash the benzil. After being tray dried at 50-60°C., the benzil was stored in drums.

65. Benzil and guanidine carbonate were condensed in a 50 gallon glass-lined jacketted reactor. The hot slurry was blown by means of compressed air into a 50 gallon iron open top tank for cooling and filtering. The filtrate was removed by an immersion type suction filter and was distilled for solvent recovery. The filter cake was placed in a 100 gallon glass-lined tank and was dissolved in a solution of hydrochloric acid. This tank was equipped with a propellor type agitator. Sufficient

UNCLASSIFIED

ammonium (or sodium) hydroxide solution was then added to the agitated mixture to give a pH of 8. The resulting slurry was pumped into a 24 inch plate and frame filter and the precipitate discarded. The filtrate was pumped into a 100 gallon iron tank equipped with a propellor agitator. Aqueous sodium hydroxide was added to make the solution strongly basic. The pure S-330 base which precipitated was filtered and washed on an 18 inch horizontal plate filter. The filtrate was discarded.

66. The S-330 base was chlorinated in a 100 gallon glass-lined tank equipped with a propellor agitator and chlorine dispersing unit. A cover and ventilator blower were provided for this tank. The base was dissolved in dilute hydrochloric acid and chlorine was run into the solution as fast as it could be absorbed. The precipitated S-330 was filtered and washed on a horizontal plate filter and dried in tray driers at 50-60°C.

67. A description of each item of the plant equipment is given in Appendix B.

B. Production of Benzil.

(1) Benzoin Condensation.

68. The benzoin condensation was carried out in a 100 gallon iron tank equipped with an immersion coil through which steam or cold water could be run. A Lightnin mixer was clamped to the upper edge of the tank. The mixer had a long propellor shaft extending nearly to the bottom of the tank. An iron cover and a three inch fume duct leading to the hood blower system adequately removed the cyanide and benzaldehyde fumes. It was anticipated that some trouble would be experienced in clogging of the immersion coils with the thick slurry of benzoin. This was found to be true and considerable manual labor was often necessary to remove the caked benzoin. A drawing of this unit is shown in Plate 3 of Appendix A.

69. The benzaldehyde was received in 55 gallon steel drums which were stored outside the building. To remove the benzaldehyde a connecting fitting, consisting of a pipe extending to the bottom of the drum and an air

inlet to the top of the drum, was made up from standard pipe fittings. This fitting was screwed into the outlet of each drum in turn and connected by a union to a 1/2 inch pipe running directly to the benzoin reactor. Compressed air (10 psi) was used to blow the benzaldehyde to the reactor.

70. In the initial operation 28 gallons of 95% ethanol, 22 gallons of water, and 18 pounds of sodium cyanide were placed in the reactor. The mixture was stirred to dissolve the cyanide (and the stirring continued throughout the course of the reaction). Twenty-one gallons (184 lbs.) of a good grade of commercial benzaldehyde was run into the reactor. The mixture was then heated to 50°C. and this temperature was maintained until crystallization started. It was found that crystallization usually started about 15 minutes after the charge reached 50°C. Careful control at this point was necessary since the high heat of crystallization of benzoin would cause the charge to boil over if the temperature were raised much higher before crystallization started. The heat of crystallization was usually sufficient to raise the temperature of the charge to 70°C without additional heating. The temperature was then maintained at 70°C for 2 hours after which the mixture was cooled to 35°C by circulating cold water through the coils. The slurry was run out through the large drain valve into a suction type filter of 3.5 cu. ft. solid capacity. A 50 gallon tank was used for the filtrate receiver. The filtrate was blown back to the reactor with compressed air and was reused. The benzoin was washed with alcohol and water either in the filter or in a separate tank and refiltered. It was found that the mother liquor could be used for a large number of runs by building up to the original volume with alcohol (including the alcohol used for washing), and water and adding more sodium cyanide. An average of 12.6 gallons of ethanol, 6.0 gallons of water, and 8.6 pounds of sodium cyanide were used for each of the forty-five runs that were made.

71. A total of eight thousand pounds of benzaldehyde was converted into benzoin. Most of this benzoin was oxidized to benzil without being dried although this increased the amount of nitric acid required for the oxidation. This was done chiefly to save time, since the drying capacity of the plant was limited. Yields on the

individual runs of benzoin are not known since the material was not dried and also because of difficulty encountered in removing all the product from the reactor after each run. Often a considerable amount of caked benzoin was allowed to remain in the reactor with the succeeding run. Some low yields were obtained in working out the process for reuse of the mother liquor. However, after the process had been fully developed a number of runs were weighed and the average yield found to be about 85 percent of the theoretical.

(2) Nitric Acid Oxidation of Benzoin.

72. Oxidation of the benzoin to benzil was carried out in a 40 gallon stoneware crock set in a galvanized iron water jacket. A 1/2 inch steam line feeding directly into the bottom of the water filled jacket easily kept the jacket temperature at 95-98°C. The jacket was fitted with a 2 inch drain valve at the bottom and an overflow pipe for draining off the steam condensate. The large drain valve was piped directly to the sewer and was installed as a safety precaution in the event that the stoneware crock should crack and release nitric acid into the iron water jacket. The crock was fitted with an aluminum cover 1/4 inch in thickness containing a thermometer opening, a loading port for adding material, an opening for a light and fitted with a 2 inch diameter cold finger glass reflux condenser. Effluent gases passed from the top of the reflux condenser through a two inch glass pipe into the top of a six foot ceramic packed absorption tower. Water was sprayed into the top of the tower. This absorption tower was constructed from three 12 inch sewer tiles and gave excellent results. The reactor was also equipped with a propellor stirrer but this was later removed as it was found that bubbling of the mixture gave adequate stirring. Drawings of the benzoin oxidizer and the absorption tower are shown in Plates 4 and 5 of Appendix A.

73. In the course of operations several changes were made in the procedure. At first the used nitric acid from the preceding run was adjusted to 20 gallons of 40-45 percent concentration by adding concentrated acid. The acid was heated to 95-98°C. and about 50 pounds of dry benzoin added in portions. Heating was continued until a sample of the benzil no longer gave a positive

Fehling's test. It was often necessary at this point to add more concentrated nitric acid to increase the density of the acid solution in order to cause the molten benzil to float. Later, wet benzoin was used directly from the filter. It was added to the spent nitric acid from the preceding run until the entire batch had been added. Each batch of benzoin was the amount obtained from 184 pounds of benzaldehyde and amounted to approximately 155-160 pounds of benzoin on a dry basis. After all the benzoin had been added, the nitric acid was adjusted to 20 gallons of 50 percent concentration by removing a portion of the dilute acid and adding concentrated acid. The necessary quantities were determined from a prepared chart on the basis of specific gravity. The heating was continued until a sample of the benzil gave a negative Fehling's test showing the absence of benzoin. While still molten, the benzil layer was siphoned through an electrically heated glass siphon into a stoneware crock containing about 20 gallons of water heated to boiling by a direct steam line. The water-molten benzil mixture was agitated vigorously with a powerful motor stirrer and made alkaline to litmus by the addition of sodium bicarbonate. The benzil was then crystallized by the addition of cold water to the mixture until a temperature of 50-60°C was reached. Vigorous stirring was necessary during the crystallization to obtain a finely crystalline product. The slurry was filtered on a suction type filter of 3.5 cu. ft. solid capacity and was then washed thoroughly with cold water and dried in a tray drier at 50-60°C.

74. Approximately 150 pounds of benzil was produced in each run. The average yield of benzil from benzoin was about 95 percent and the average yield based on benzaldehyde was about 81 percent. A total of approximately 6000 pounds of benzil was produced in this unit.

75. The production of benzil was undertaken in this plant only because it was impossible to obtain it from commercial sources. As a result, the equipment was somewhat makeshift and only a limited amount of data was obtained. However, a sufficiently good grade of benzil was produced in ample quantities for further pilot plant work on the S-330 condensation.

C. Condensation of Benzil with Guanidine Carbonate.

76. The S-330 base condensations were run in a 50 gallon glass-lined jacketted reactor. An anchor type stirrer and baffle gave sufficient agitation to keep the heavy slurry well mixed. A vertically mounted multiple tube condenser having 13 square feet of cooling surface was used both for refluxing and for solvent distillation. Valves were provided in the condensate lines so that the distillate could be run into two 55 gallon solvent storage tanks or returned to the reactor. A two inch outlet pipe in the bottom of the reactor served to run out the slurry after the reaction was complete. Compressed air at 10-15 psi was used to blow the charge out of the reactor into the filter. A drawing of this unit is shown in Plate 6 of Appendix A.

77. Several of the earlier condensations were heated by passing steam into the jacket of the reactor until the charge was refluxing. Later work indicated, however, that higher yields were obtained at 70°C. To maintain a temperature of 70°C., a Fenwall regulator was installed in the jacket overflow line to control a 3/8 inch solenoid valve on the steam inlet line. With the jacket filled with water, this arrangement gave excellent temperature control.

78. Most of the pilot runs were made in ethyl alcohol with a molar ratio of benzil to guanidine of 1:2.25. The quantities of material used in each run were: 52.5 lbs (113.6 moles) of benzil, 50.5 lbs. (255 moles as guanidine) of guanidine carbonate, and 25 gallons of 95 percent ethanol. All the materials were placed in the reactor at room temperature with the agitator running. Steam was then turned on and the mixture heated to the desired temperature. The large initial evolution of carbon dioxide at refluxing temperature made it necessary to control the heating so that the temperature did not rise above 75°C. for approximately 45 minutes. In a few instances the charge was heated to refluxing too quickly and resulted in a violent foaming of the mixture and a considerable pressure rise in the reactor. After the evolution of carbon dioxide had subsided, the mixture was heated for 4-6 hours to complete the reaction. The charge was then cooled by

circulating cold water through the jacket of the reactor and the charge was blown out through the bottom outlet pipe with compressed air into a fifty gallon iron open top storage tank. An immersion suction filter of approximately 250 sq. inches filtering area removed the solvent in about 1 hour leaving the crude condensation mixture ready for separation. The filtrate alcohol was recovered by distillation and reused in the process.

79. Reaction rate studies at reflux temperature showed that maximum yields of S-330 base were obtained in three hours (including the 45 minutes allowed for bringing the charge up to temperature). A slight decrease in the yield of S-330 base occurred upon prolonged heating at this temperature. Reaction rate studies at 70°C., in which the benzil and alcohol were heated before the addition of the guanidine carbonate, showed the reaction was practically complete in 3.5 to 4.0 hours. No decrease in yields occurred upon prolonged heating at 70°C. Although the reactants were heated to 70°C rapidly at the start of the reaction, very little foaming occurred in contrast to the violent foaming observed at reflux temperature. As a result of these studies, most runs in the pilot unit were heated at 70°C for four hours. A comparison of the reaction rates at reflux temperature and at 70°C. as determined with the 50 gallon reactor, is presented in Table XIII and in Plates 15 and 16 of Appendix D.

Table XIII

Condensation of Benzil with Guanidine Carbonate

At Reflux

Time (Hrs.)	Yield, % of Theoretical			
	Insol.	S-222	"pH8"	S-330
1.0*	60.9	1.9	2.9	11.0
1.5	18.9	9.0	3.4	42.0
2.0	9.7	17.1	2.2	48.5
3.0	3.7	17.5	1.8	51.5
4.0	3.5	18.1	2.1	51.8
5.0	3.0	18.6	6.2	47.9
7.0	3.6	17.5	9.7	46.0

At 70°C.**

Time (Hrs.)	Yield, % of Theoretical			
	Insol.	S-222	"pH8"	S-330
0.5	51.8	2.1	1.9	18.5
1.0	28.9	4.0	3.5	36.0
1.5	19.7	7.6	1.0	46.3
2.5	8.0	11.3	2.7	48.4
3.5	7.1	10.3	1.8	51.5
4.5	5.1	11.2	2.3	51.5
5.5	4.3	11.6	2.8	51.2
6.0	4.0	12.8	4.2	53.0

* This includes the 45 minutes allowed to bring the temperature up to reflux.

** The alcohol and benzil were heated to 70°C before the guanidine carbonate was added.

80. A total of one hundred and seven condensations were made in the pilot plant with an average yield of 48 percent based on the benzil added to the reactor. This average yield is considerably lower than the yields reported in the laboratory work. The lower yields obtained in the plant operations are probably due to the lower grade of benzil used since the benzil produced in

the pilot plant was not recrystallized. Laboratory runs made with recrystallized samples of this benzil gave excellent yields of S-330 base.

81. Distillation of the alcohol filtrate from the condensation left a considerable quantity of a nearly solid gummy residue in the still. From 3 to 5 gallons of this material, obtained from the distillation of fifty gallons of filtrate, was blown out of the still while hot. Attempts to recover benzil from this residue were fruitless, so that all remaining residues were discarded.

D. Separation of the Condensation Products of Benzil and Guanidine Carbonate.

82. The crude filter cake from one run was suspended in fifty gallons of water in a 100 gallon glass lined open top tank equipped with a high speed propellor agitator. Concentrated hydrochloric acid was added slowly until the foaming due to liberation of CO_2 had stopped. Sufficient water was added to make the volume up to 80 gallons. More hydrochloric acid was then added to bring the pH of the solution below 2. The total volume of acid used per run varied from 5.8 to 6.6 gallons. To the resulting solution, concentrated ammonium hydroxide or a 25% solution of sodium hydroxide was slowly added until a pH of 8 was reached. Vigorous agitation with a slow addition of the base was necessary at this stage to prevent local precipitation of S-330 base only when sodium hydroxide was used. Ammonium hydroxide was used for most of the separations in the pilot plant, although in some experimental runs on direct chlorination of the separation liquor sodium hydroxide was used.

83. The thin slurry was filtered in a 24 inch plate and frame filter and the clear filtrate pumped into a 100 gallon iron open top tank for precipitation of the S-330 base. It was found that eight runs could be filtered successively before the filter press became filled. The by-product filter cake was discarded.

84. To the filtrate was added about seven gallons of 25 percent sodium hydroxide solution to precipitate the pure S-330 base completely. Completeness of precipitation was checked by filtering a small sample of the

slurry and adding sodium hydroxide to the filtrate. The precipitated S-330 base was filtered and washed in an 18 inch horizontal plate filter. In most runs the wet base was chlorinated without being dried. For this reason yields of the S-330 base were not obtained.

85. Although most runs in the pilot plant were separated into only a by-product fraction and pure S-330 base, two runs at reflux temperature were completely separated into four fractions. Each of the four fractions was dried and the yields calculated. Pure recrystallized benzil was used in these two runs. The data obtained are presented in Table XIV.

Table XIV

Complete Separation of Condensation Products

	Yield, % of Theoretical			
Run No.	Insol.	S-222 Base	"pH8"	S-330 Base
1	10	14	7	59
2	10	13	8	58

86. A comparison of the data shown in the above table with the laboratory data given in Table IV shows a good correlation between pilot plant and laboratory results. The yields of S-330 base were comparable since the same quality of benzil (recrystallized) was used in both cases. In the pilot plant, higher yields of the insoluble fraction, with correspondingly lower yields of S-222 base, were obtained.

E. Chlorination of S-330 Base.

(1) Suspension Chlorination

87. Chlorination of S-330 base in the pilot plant was carried out in a 100 gallon glass-lined open top tank equipped with a high-speed propellor agitator and a removable cover. A four inch vent pipe attached to the exhaust ventilation system prevented the escape of chlorine into the room. Chlorine gas was run from 100

pound cylinders into the suspension of S-330 base through a 10 mm. glass tube extending to the bottom of the glass-lined tank. In some cases a small amount of Aerosol OT was added to the suspension to decrease the chlorine bubble size. All chlorinations were made at room temperature. The addition of chlorine was continued until the reaction was complete. This was shown by a lack of precipitate upon addition of strong alkali to a sample of filtrate. Further chlorination seldom increased the active chlorine content of the product. The results of nine runs are shown in Table XV. In some runs, particularly P-13, a prolonged chlorination time was necessary to raise the active chlorine content above thirty percent. Inconsistent results with the suspension method of chlorinating led to the development of the solution chlorination method.

Table XV

Suspension Chlorination

Batch No.	% Solid	% Aerosol OT	Chlorination Time (Hrs.)	Lbs. Yield	% Cl+
P-6	5.0	0.1	12	37.6	31.5
P-7	5.0	0.01	13	37.5	30.0
P-8	5.0	0.001	9.5	39.0	31.2
P-9	2.0	None	6	12.0	31.2
P-10	2.0	0.001	5.5	12.9	31.8
P-11	2.8	0.001	15	21.8	32.0
P-12	3.0	0.001	17.8	25.0	30.7
P-13	2.8	None	32	22.0	32.0
P-14	2.0	0.001	14.5	14.3	31.5

(2) Solution Chlorination

88. The lack of uniformity in the rate of chlorine absorption of S-330 base suspensions in water was probably due to the heterogeneous nature of the reaction. To overcome this difficulty, the S-330 base was dissolved in water before chlorination by converting it to the soluble hydrochloride salt. Solutions of the hydrochloride salt were found to absorb chlorine readily and give reproducible absorption rates. Both the mono- and the dihydrochloride salt solutions absorbed chlorine

equally well.

89. Chlorination of dilute solutions of the dihydrochloride salt takes place with extreme rapidity when a sufficient quantity of the chlorinating agent is present. This was demonstrated by mixing quickly a dilute solution of S-330 base dihydrochloride with an equal volume of saturated chlorine water. Precipitation occurred instantly. The mixture was filtered immediately and a nearly quantitative yield of S-330 (31.8% Cl+) was obtained. The low solubility of chlorine in water makes this procedure impractical on a large scale. It seemed possible, however, that by adding a solution of S-330 base dihydrochloride slowly to a large volume of saturated chlorine water and simultaneously adding chlorine at a rapid rate a product having an active chlorine content closer to the theoretical thirty-three percent might be obtained. An experiment conducted on this basis failed to give chlorine values significantly higher than those obtained previously. This experiment is described below.

90. 13.2 liters of water in a six gallon crock was saturated with chlorine. A clear solution of the dihydrochloride of S-330 base, made by dissolving 250 grams (0.87 mole) of S-330 base in 3.8 liters of water containing 1.75 moles of hydrochloric acid, was added to the saturated chlorine water with rapid stirring over a period of fifteen minutes. A rapid stream of chlorine was run in simultaneously with the addition of the base salt and continued for another thirty minutes. 100 ml. samples were withdrawn at intervals, filtered and dried. Analysis of the samples for active chlorine showed that the chlorine content remained quite constant. The results are presented in Table XVI.

Table XVI

Chlorination of S-330 Base Dihydrochloride

Min.	Gm. ppt./100 ml. sample	% Yield*	% Cl+
5	0.94	44.2	31.4
15	1.27	59.7	31.7
25	1.42	66.7	-
35	1.72	81.0	-
45	1.93	90.8	31.8

* Based on total S-330 base used and on a product containing 33.0% Cl+

91. From observation of chlorination of S-330 base hydrochloride solutions it appeared evident that the rate of absorption of chlorine was limited largely to the rate at which the chlorine could be brought into contact with the solution. An increase in the contact surface between the chlorine bubbles and the solution by a decrease in bubble size was found to increase the chlorination rate considerably. Decreasing the bubble size was accomplished in two ways; (1) By adding Aerosol OT to decrease the surface tension of the solution, and (2) by mechanically increasing the dispersion of the chlorine bubbles throughout the solution. The high degree of gas dispersion throughout the solution was obtained by forcing the chlorine to pass through the blades of a high speed propellor agitator where the shearing force was great enough to reduce the bubbles to a very fine foam. A diagram of the apparatus used in the pilot plant is shown in Plate 7 of Appendix A.

92. Four runs were made by saturating sixty gallons of water with chlorine at room temperature. To the saturated chlorine water was added a solution of the base dihydrochloride in fifteen gallons of water simultaneously with the rapid addition of chlorine. Fifteen minutes were required to add the base solution. Chlorination was continued until a sample of filtrate yielded no precipitate upon the addition of strong alkali. Data from these four runs is presented in Table XVII.

Table XVII

Plant Chlorination of S-330 Base Dihydrochloride

Run	Conc. of Soln. (as S-330 base)	Chlorination Time (Hrs.)	% Cl+	Yield (lbs.)	Yield %
P-15	1.5%	2.25	31.5	12.5	96.5
P-16	1.2	3.25	31.5	10.1	96.4
P-17	2.3	3.25	31.5	19.3	95.8
P-18	2.3	3.25	31.6	19.0	94.5

The chlorination time of these hydrochloride solutions is considerably less than the chlorination time of the comparable suspension chlorinations shown in Table XV.

93. Passing chlorine directly into a solution of S-330 base dihydrochloride indicated that it was of no advantage to add the dihydrochloride salt solution to previously saturated chlorine water. Over eighty pilot plant batches of S-330 were prepared by chlorinating the dihydrochloride salt solution directly at room temperature. Chlorine was added through the "saturator unit" as fast as it could be absorbed. This was generally about 10 lbs. per hour. Since the temperature rise of the solution during chlorination was approximately 3°C., no cooling was necessary.

94. In a typical run the wet base from a 113 mole condensation of benzil and guanidine carbonate was placed in the chlorinator. Eighty gallons of water and 3.4 gallons of technical hydrochloric acid (20°Be.) were added. Chlorine was run in until a sample of filtrate gave no precipitate with strong alkali. Three hours and ten minutes were required to complete the reaction. The precipitated S-330 was filtered in an 18 inch horizontal plate filter, washed, and dried. The yield was 61.5 lbs. Analysis, 31.0% active chlorine. Data from a number of similar runs are presented in Table XVIII. Nearly quantitative yields were obtained in the chlorination with a chlorine efficiency of approximately 71 percent. The chlorine efficiency could be very much improved by connecting 2 chlorination tanks in series. The average weight of chlorine used per run was 44 pounds. The average chlorination time of runs made in the pilot plant was four to five hours.

Table XVIII

Typical Solution Chlorinations

Run No.	Time (Hrs.)	% Cl+	Yield (lbs.)
1	4.0	31.4	50.9
2	4.0	32.0	47.6
3	4.0	31.2	58.1
4	4.1	30.2	51.0
5	5.7	30.8	54.6

95. In the period of operation of the plant a total of 4000 pounds of S-330 was prepared.

96. Table XIX gives a summary of the materials used and yields obtained during the operation of the pilot plant.

Table XIX

Summary of Materials and Yields

Reaction	No. Runs	Materials	Wt.	Wt. Yield	% Yield
Benzoin	45	Benzaldehyde Ethanol Water NaCN	184 # 28 gal. 22 gal. 18 #	157 lbs.	85
Benzoin Oxidation	47	Benzoin Nitric Acid	157 # 20 gal. (50%)	150 lbs.	95
Condensation	107	Benzil Guanidine Carbonate Ethanol	52.5# 50.5# 20 gal.	37 lbs.*	50*
Chlorination	107	S-330 Base Water Hydrochloric Acid Chlorine	33 # 80 gal. 3.4 gal. 44 #	49 lbs.	90**

* In most of the runs the S-330 base was used wet so that dry yields were not obtained. These results are calculated from the weight of S-330 assuming a 90% yield on chlorination.

** The 90% value was chosen since the final product averaged approximately 31% Cl+ instead of the theoretical 33%.

F. Drying of S-330 Powder.

97. Four steam heated wooden tray driers, each

having eight trays three feet square, were used to dry the S-330 powder. Trays were spaced six inches apart and were staggered to provide passage of hot air from an external heater over each tray from the bottom to the top of the drier. Each drier was equipped with a centrifugal blower of 50 cu. ft. per minute capacity to drive the effluent air out of the building.

98. At a temperature of 50-60°C. a batch of S-330 was dried in two days to a moisture content of less than 0.5 percent. On longer drying it was possible to reduce the moisture to less than 0.1 percent. However, due to lack of drier capacity, this was not done with most of the material produced. The capacity of the four driers was sufficient to dry 300 to 400 pounds of S-330 powder a week.

99. To facilitate removal of the dry S-330 from the wooden trays a sheet of heavy brown wrapping paper was placed on the tray and the wet S-330 spread out on the paper. It was necessary to discard the paper after each batch was dried.

G. Operational Control and Analysis.

100. Plant control was limited to seven points in the series of operations. This was considered to be the minimum number required to maintain the quality of the product and to insure optimum yields. In larger scale production, other controls would be necessary for economical operation. In this pilot plant no controls were made on the water-alcohol ratio or cyanide content of the recycled benzoin condensation liquor. The following seven tests were made throughout the series of operations:

(1) A Fehling's test was made on the molten benzil before siphoning it out of the benzoin oxidizer. A negative test indicated that the benzoin was completely oxidized to benzil. The heating was continued until a negative test was obtained.

(2) The concentration of nitric acid in the benzoin oxidizer was adjusted during each run so that 20 gallons of 45 to 50 percent nitric acid was present. This was done by measuring the volume of spent acid in the reactor with a calibrated "measuring stick", determining the

specific gravity of the spent acid, and reading off from a prepared chart the volume of spent acid to be removed and the volume of concentrated acid to be added.

(3) Before a batch of benzil was removed from the drier, a sample was removed for moisture determination. The moisture was determined by heating a sample in an oven at 75°C for two hours. Most runs were dried to less than 1 percent moisture.

(4) A close check was kept on the pH of the separation solution. This was particularly critical at the "pH8" step where some S-330 base may be lost in the discarded by-product. An industrial model Beckmann pH meter was used for all pH measurements.

(5) The completeness of precipitation of S-330 base from the separation liquor was checked by the addition of concentrated sodium hydroxide solution to a sample of filtrate.

(6) The end of the chlorination reaction was determined by filtering a sample of the slurry and adding concentrated sodium hydroxide to the filtrate. A white precipitate indicated unchlorinated base in solution.

(7) The moisture content of each batch of S-330 was determined before it was removed from the drier. A representative sample was heated for two hours at 100°C. The material was left in the drier until it showed a weight loss of less than 0.5 percent.

101. Further analyses were made on the final S-330 powder. These were not regarded as control analyses but rather as a basis for writing specifications covering the purchase of S-330 powder. In this respect, the following determinations were made:

(1) The melting point of each batch of S-330 base was determined from a small representative sample before chlorination. The average melting point was 227.8°C. (with decomp.) with an average deviation of 5.0°C.

(2) Determination of the moisture content of the S-330 powder was described in test (7) under plant control.

(3) The melting point of each batch of S-330 powder was determined. The average of the first seventy runs was 195.9°C (with decomp.), with an average deviation of 3.0°C.

(4) The active chlorine content was determined by adding potassium iodide to an acetic acid-chloroform

solution of S-330 and titrating with standard sodium thiosulfate. The average for the first seventy runs was 30.6 percent active chlorine with an average deviation of 0.5 percent.

(5) The loss of active chlorine on heating at 150°C for three hours was determined. The average loss for samples from the first seventy runs was 4.7 percent of the original active chlorine content, with an average deviation of 2.3 percent.

(6) The stability of the S-330 in boiling water was determined by refluxing a weighed sample (approx. 0.2 gm.) in 100 ml. of water for five hours, cooling the mixture and titrating for active chlorine. The average hydrolytic loss for samples from the first seventy runs was 8.2 percent, with an average deviation of 2.4 percent.

H. Micronizing of S-330 Powder.

102. Since the original development of S-330 was for use as an impregnite in protective clothing it was necessary to incorporate the S-330 powder into stable emulsions suitable for fabric coating. For the preparation of these emulsions it was desirable to have the S-330 powder of a small uniform particle size, preferably from 1 to 5 microns. Early work on S-330 for Protective Ointments also called for a product of small particle size.

103. Although some attempts were made to control the particle size in the chlorination of the S-330 base the product contained crystals up to 50 microns in length. To obtain smaller and more uniform particles, a considerable amount of dry S-330 powder was micronized in a micronizer developed by the International Pulverizer Corp. Since S-330 did not live up to expectations as an impregnite for clothing and since the final use of S-330 in a protective ointment did not require a micronized product, further work on the micronizing of S-330 was discontinued.

104. About 2000 pounds of S-330 were micronized with a recovery of 1750 pounds. This considerable loss through the micronizer exhaust could be avoided on a properly designed permanent installation. A 20 inch micronizer with a 13 inch tangent air jet circle, was used. 86 pounds of S-330 were run through at a feed

rate of 200 pounds per hour and 1521 pounds at a feed rate of 135 pounds per hour. 78 pounds were run through with an 11 inch tangent air jet circle at a feed rate of 285 pounds per hour. Considerable difficulty was encountered due to the tendency of the S-330 to pack in the venturi feed tube and stop the machine. The average running time was about ten minutes before the venturi became plugged. This is contrasted to a satisfactory grinding material which will run over two hours before plugging the venturi.

105. Further experimentation with different feed mechanisms and the incorporation of magnesium stearate or other materials with the S-330 before micronizing would probably improve the grinding qualities of the material. It was believed that with a 24 inch micronizer and an air flow rate of 1000 cu. ft. per min. 200 to 250 pounds of S-330 could be produced per hour with 80 percent of the material below 5 microns.

I. Preparation of S-330 From Guanidine Nitrate.

106. Four pilot plant runs were made by condensing guanidine nitrate with benzil. Adkins had reported that increased yields were obtained in isopropyl alcohol by using a temperature of 65°C. and sweeping out the reactor with a stream of gas. He reported that best results were obtained with nitrogen although oxygen could be used if the agitation was not too vigorous.

107. The following four experiments were run: (1) reflux temperature with a nitrogen stream, (2) 65°C. with a nitrogen stream, (3) 65°C with an air stream, (4) 65°C with no gas stream. In each run 25 gallons of isopropyl alcohol, 29 pounds of anhydrous sodium carbonate, and 52.5 pounds of benzil were placed in the reactor. The mixture was heated to the desired temperature and 67 pounds of guanidine nitrate added. Weighed samples were removed at intervals and separated. The percentage yield of the various fractions was calculated, using the ratio of the weight of the sample to the weight of the total charge in the reactor. Plate 18 of Appendix D shows the rates of formation of S-330 base in the four runs. The decreasing order of yields was (1) nitrogen stream at 65°C. (2) nitrogen stream at reflux, (3) no gas stream at 65°C., and (4) air stream

at 65°C. Plates 18 and 19 of Appendix D show the rate of formation of the various components with a nitrogen stream at reflux temperature and at 65°C., respectively.

108. The yields in all of these reactions were considerably lower than those reported by Adkins and those obtained in this Laboratory using recrystallized benzil. It is assumed that these differences result from the poorer grade of benzil used in the pilot plant runs.

SUMMARY AND CONCLUSIONS

1. The laboratory preparation of S-330 was studied until a method suitable for pilot production was developed. A small pilot plant was built and the process studied further until good yields of a high quality product were obtained.

2. The principal products formed during condensation are S-222 base (5,5-diphenyl-2-iminohydantoin) and S-330 base (7,8-diphenyl-2,5-diiminoglycoluril). A strongly basic medium favors the formation of S-222 base. No condensation occurs in acid media.

3. The most satisfactory process developed consisted of condensation of benzil and guanidine carbonate in ethanol, separation of the products formed by controlled precipitation from solution of their hydrochlorides at suitable pH values and chlorination of a solution of S-330 base hydrochloride with gaseous chlorine.

4. The solvents most suitable for the condensation step were ethanol and isopropanol. Either guanidine carbonate or guanidine nitrate can be used although alkali (NaOH or Na_2CO_3) must be added when the nitrate is used.

5. A high temperature during condensation favors the formation of S-222 base, a low temperature favors the formation of S-330 base. However, an excessively long time is required for completion of reaction at lower temperatures. It was found that approximately 70°C. was the most practical operating temperature, four hours being required to complete the reaction.

6. The best method found for the separation of the condensation products consisted of the careful addition of alkali to a solution of the hydrochlorides to give a pH of 8, filtering the precipitated by-products and then precipitating relatively pure S-330 base by further addition of strong alkali to the filtrate.

7. The most practical method of chlorination found was to add chlorine gas directly to a solution of S-330 base hydrochloride in water at room temperature or below. It was found that suspension chlorination was erratic in

the time consumed and in the percent of active chlorine in the finished product. It was also found that, in order to obtain S-330 as the principal product, the pH of the chlorinating solution must be at a value of less than 4.0. In the pH range of 5-8 the hexachloro compound is produced on prolonged chlorination.

8. Since benzil was unavailable commercially in suitable quantities, its preparation from benzaldehyde was carried out in the pilot plant.

9. A total of 107 runs was carried out in the pilot plant using the guanidine carbonate process. The average overall yield of S-330 from benzil was 45%. Under optimum operating conditions yields of 55-60% were obtained.

10. A total of 4000 lbs. of S-330 with an average of 30.6% Cl+ was produced in the pilot plant. Sufficient control and analytical data were obtained for writing specifications for S-330.

11. A few runs were made in the plant to study the guanidine nitrate-isopropanol method of condensation. Yields and quality of product similar to those with guanidine carbonate were obtained. The use of the nitrate involves possible increases of operating costs which would have to be weighed against the use of a cheaper guanidine salt.

RECOMMENDATIONS

None. The results of this work have already been applied to commercial production and specifications for the procurement of S-330 have been written.

ACKNOWLEDGMENT

The authors wish to acknowledge F. H. Baldwin, K. Hayes, F. H. Rathmann, J. C. Speck and F. C. Theile for their contributions to the laboratory preparation of S-330. Acknowledgment is also made of the work of W. N. Oldham of American Cyanamid, in the development of the carbonate process.

Cora McLean was responsible for most of the analytical work in connection with the pilot plant. F. C. Theile prepared the drawings of the pilot plant.

APPENDICES

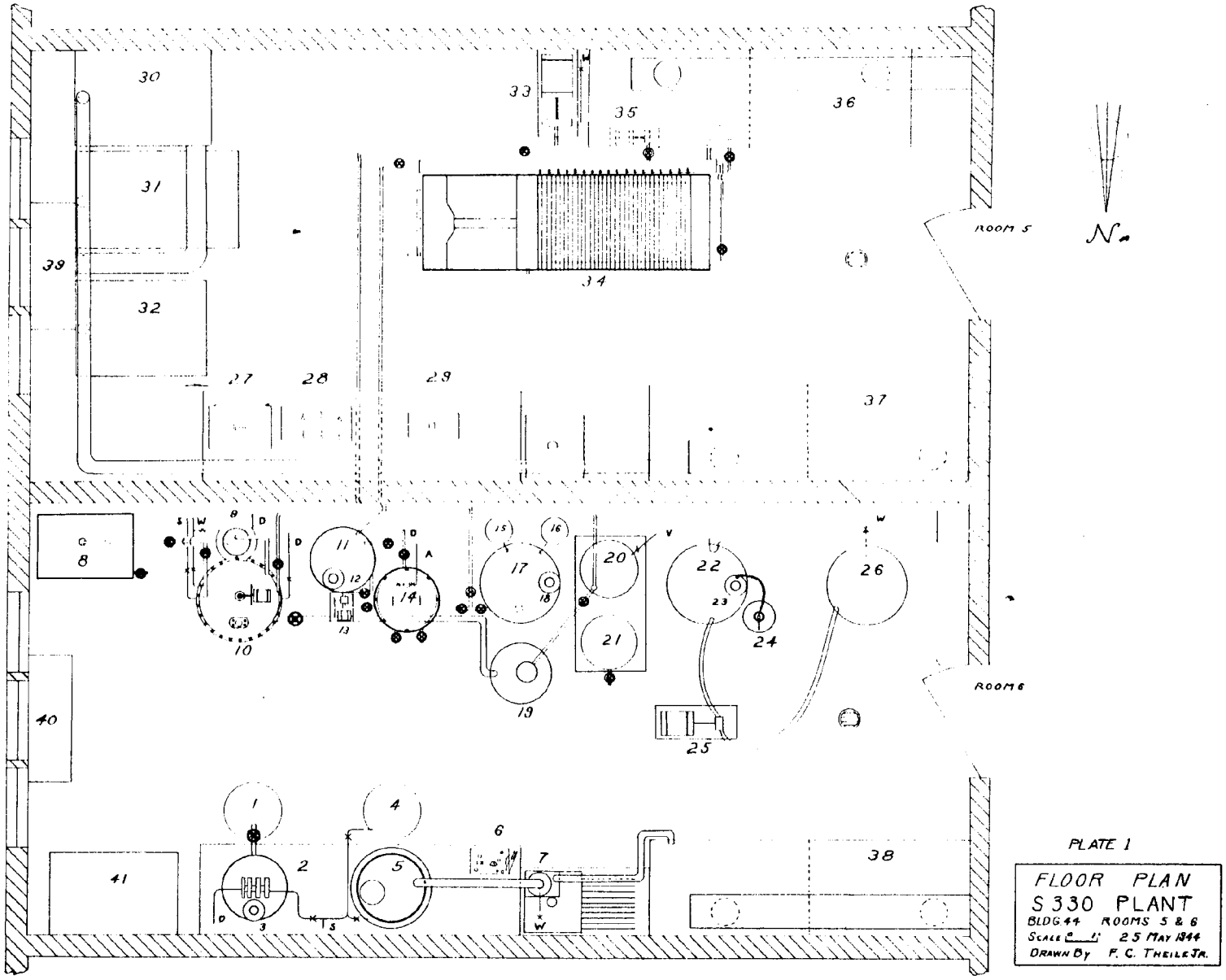
ROOM 5
ROOM 6
N
PLATE 1
FLOOR PLAN
S 330 PLANT
BLDG 44 ROOMS 5 & 6
SCALE 0 1'
25 MAY 1944
DRAWN BY F. C. THEILE JR.

UNCLASSIFIED

Plate 2 Appendix A

Flow Sheet for Pilot Plant

Preparation of S-330

CONFIDENTIAL

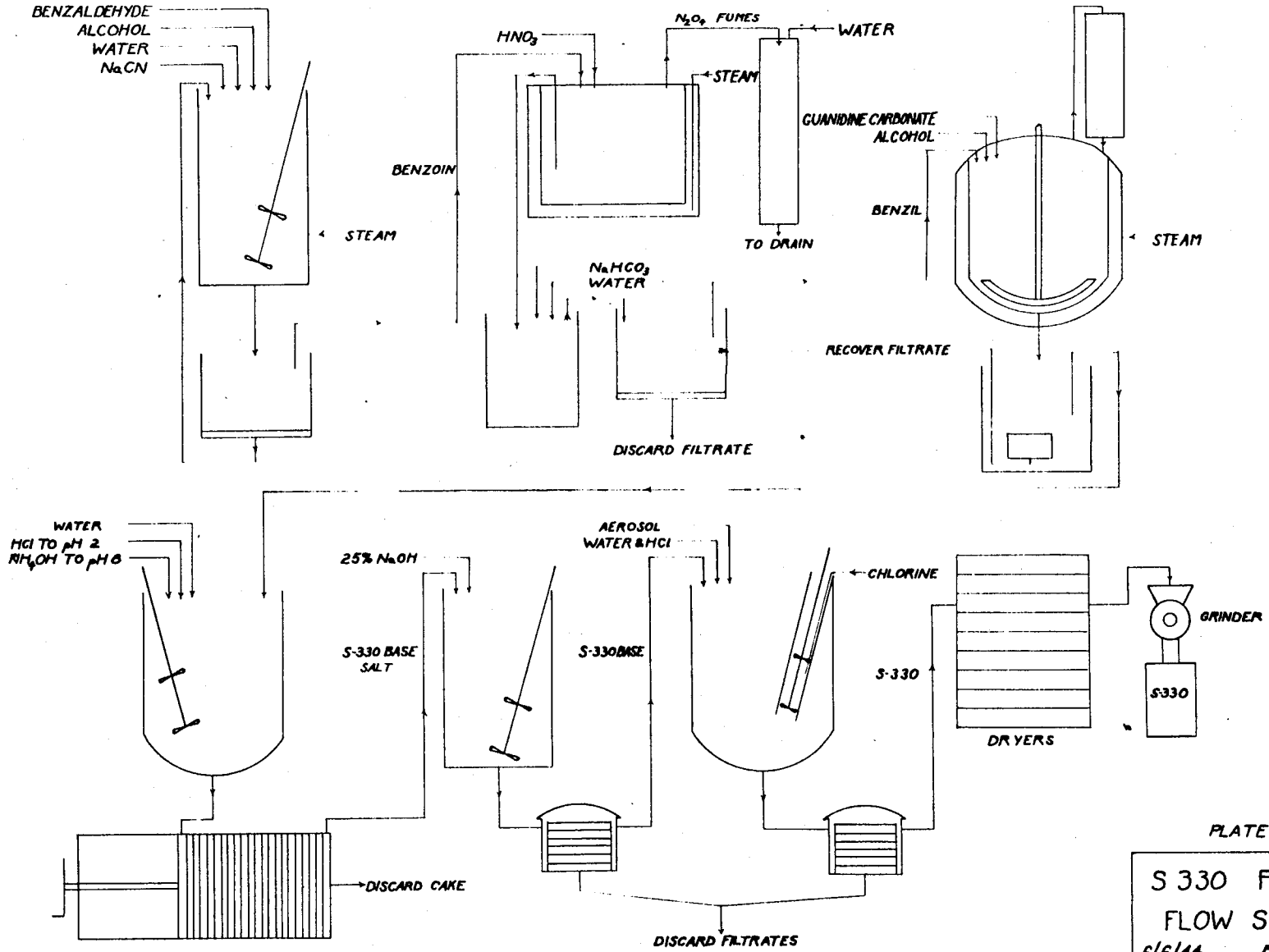

PLATE 2

S 330 PLANT FLOW SHEET

6/6/44 F.C. Theile Jr.

UNCLASSIFIED

Benzaldehyde Reactor

1. Lightnin mixer
2. Steam inlet
3. Water inlet
4. Iron tank
5. Condensate drain
6. Bottom drain valve

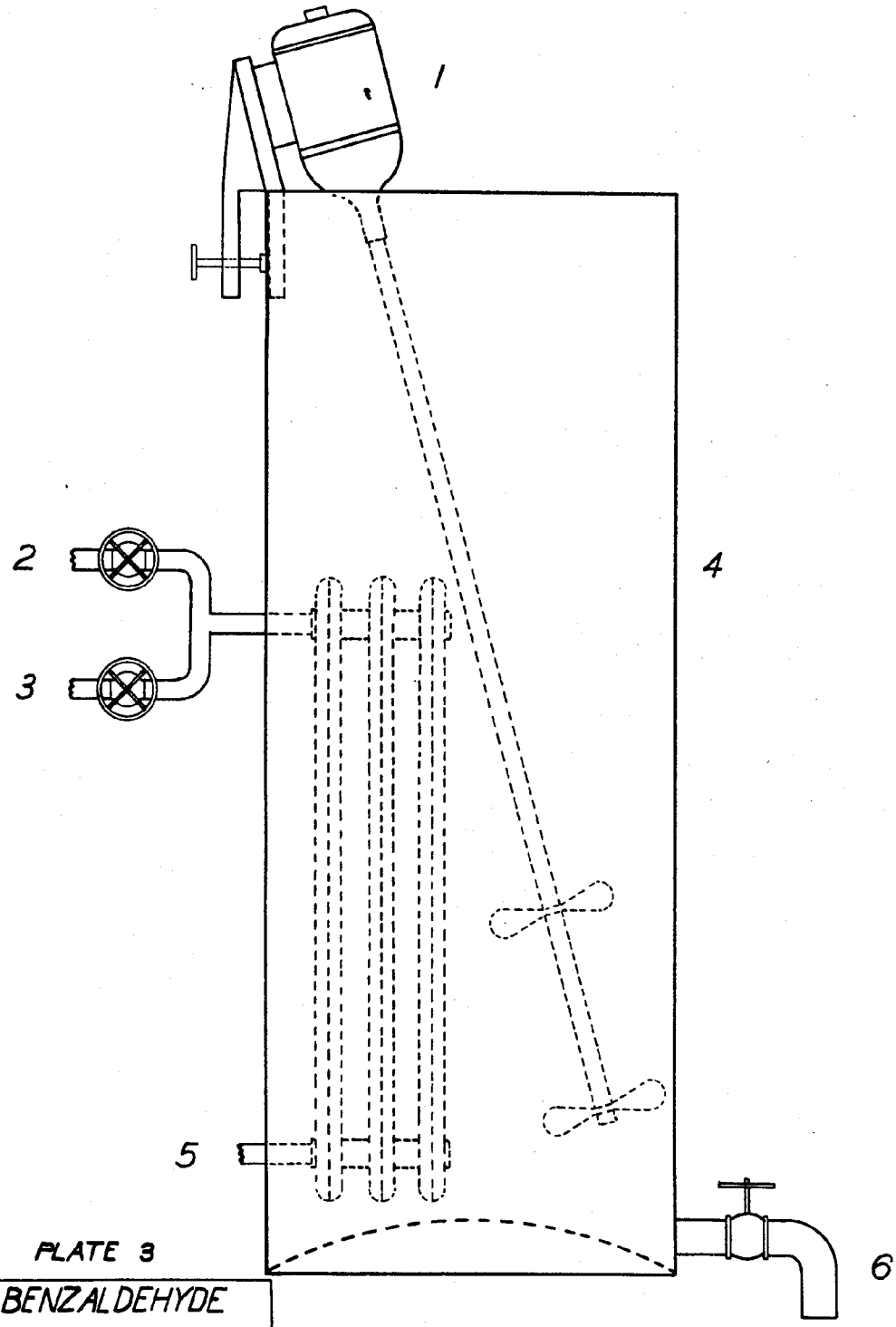

PLATE 3

BENZALDEHYDE REACTOR

0 ONE FOOT 1

KTHELLE

UNCLASSIFIED

Benzoin Oxidizer

1. Steam inlet
2. Light
3. Reflux condenser
4. Aluminum cover
5. Glass siphon
6. Gasket
7. 40 gal. crock
8. Iron jacket
9. Siphon vent
10. Heater connections
11. Steam inlet
12. Stirring motor
13. 50 gal. barrel

14-16. Crock supports

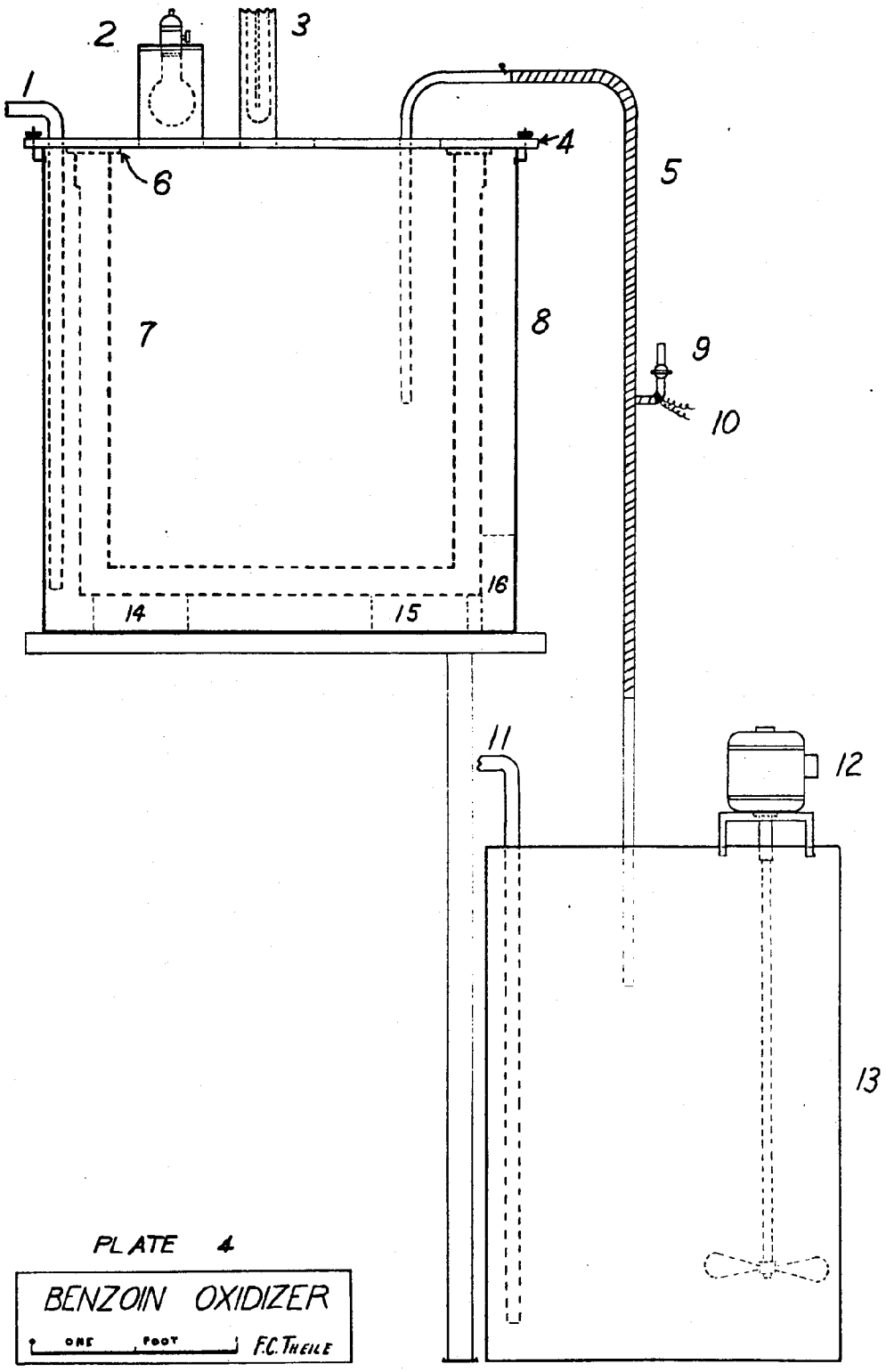

PLATE 4

BENZOIN OXIDIZER

ONE FOOT

F.C. THEILE

UNCLASSIFIED

Absorption Tower

1. Water spray inlet
2. Condenser water inlet and outlet
3. Cold finger condenser
4. 12" sewer tile
5. Broken tile packing
6. Drain
7. Connection to oxidizer

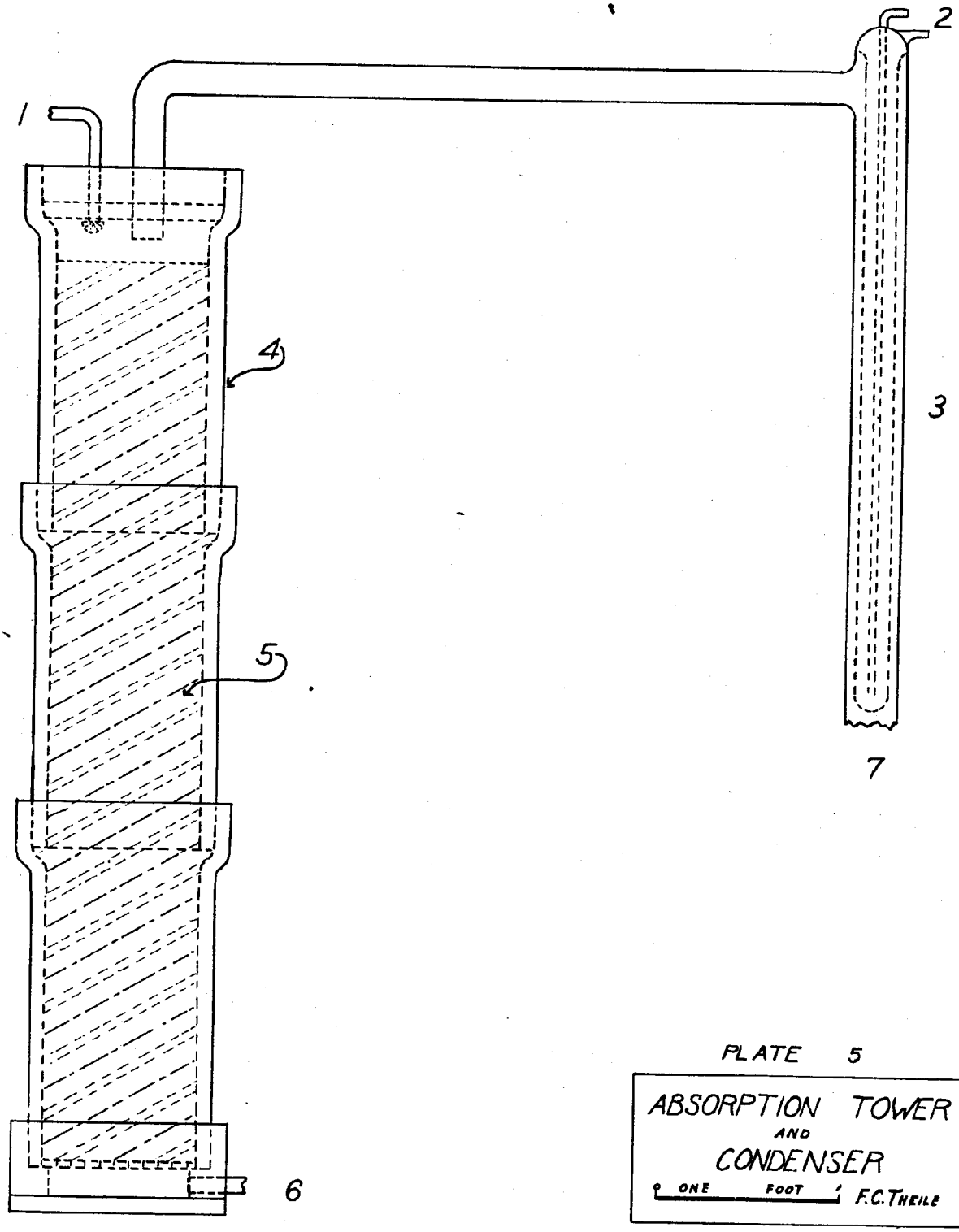

PLATE 5

ABSORPTION TOWER
AND
CONDENSER

ONE FOOT

F.C. THEILE

UNCLASSIFIED

S-330 Base Reactor

1. 50 gal. kettle
2. Bottom outlet
3. Jacket condensate drain
4. Steam inlet
5-6. Alcohol storage tanks
7. Jacket overflow drain
8. Thermometer and regulator
9. Safety pressure release
10. Motor
11. Thermometer well and baffle
12. Air vent
13. Reflux return line
14. Solvent distillation line
15. Cooling water outlet
16. Vapor line
17. Condenser
18. Mounting support
19. Cooling water inlet

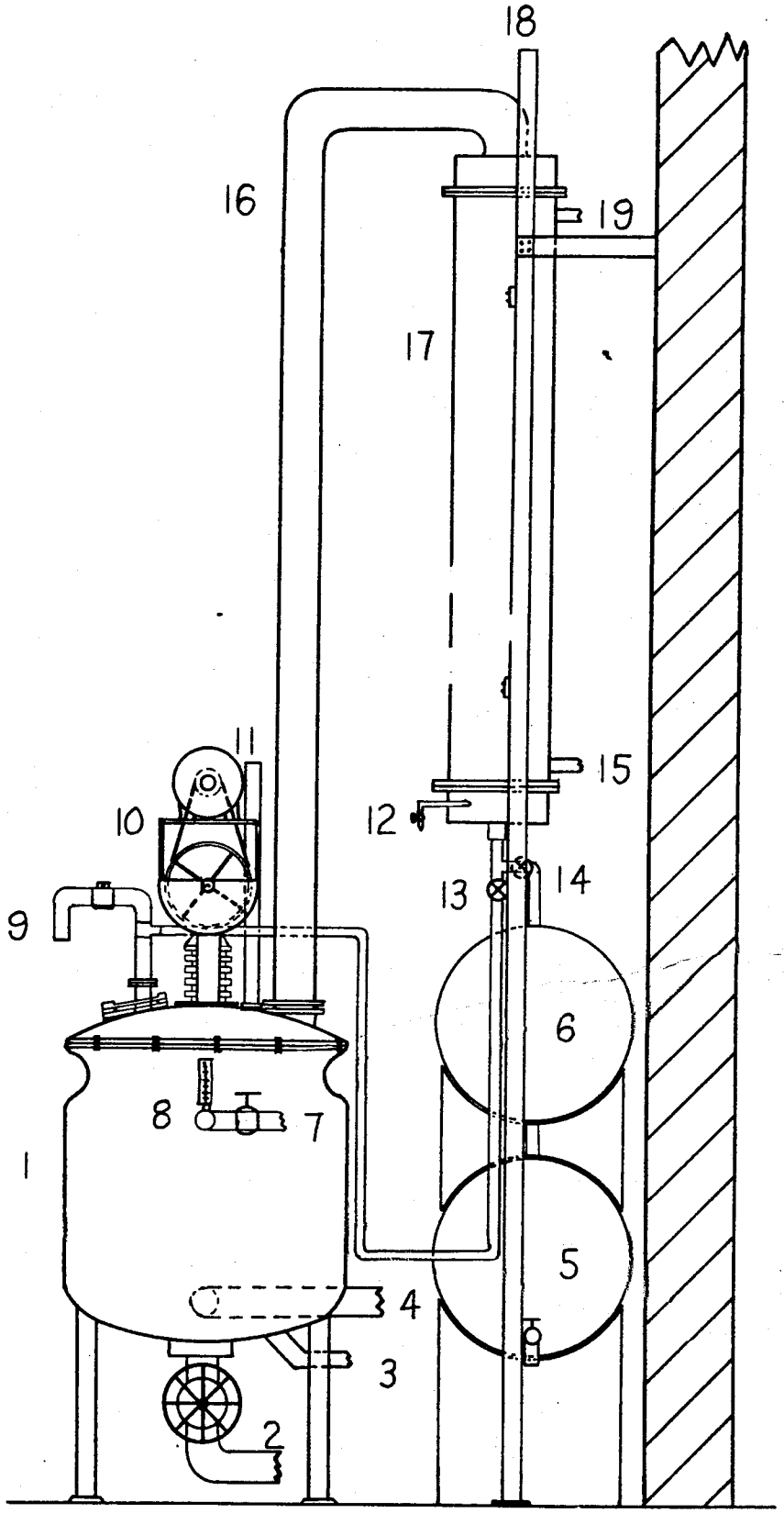

PLATE 6

REACTOR
FOR
S-330 BASE

SCALE ONE FOOT, F.C.THEILE

Chlorination Apparatus

1. Wood cover with vent pipe
2. Lightnin mixer
3. 100 gal. glass lined tank
4. 4" Bakelite tube
5. Supporting stand
6. Hoke valve
7. Chlorine cylinder
8. Bottom outlet valve

PLATE 7

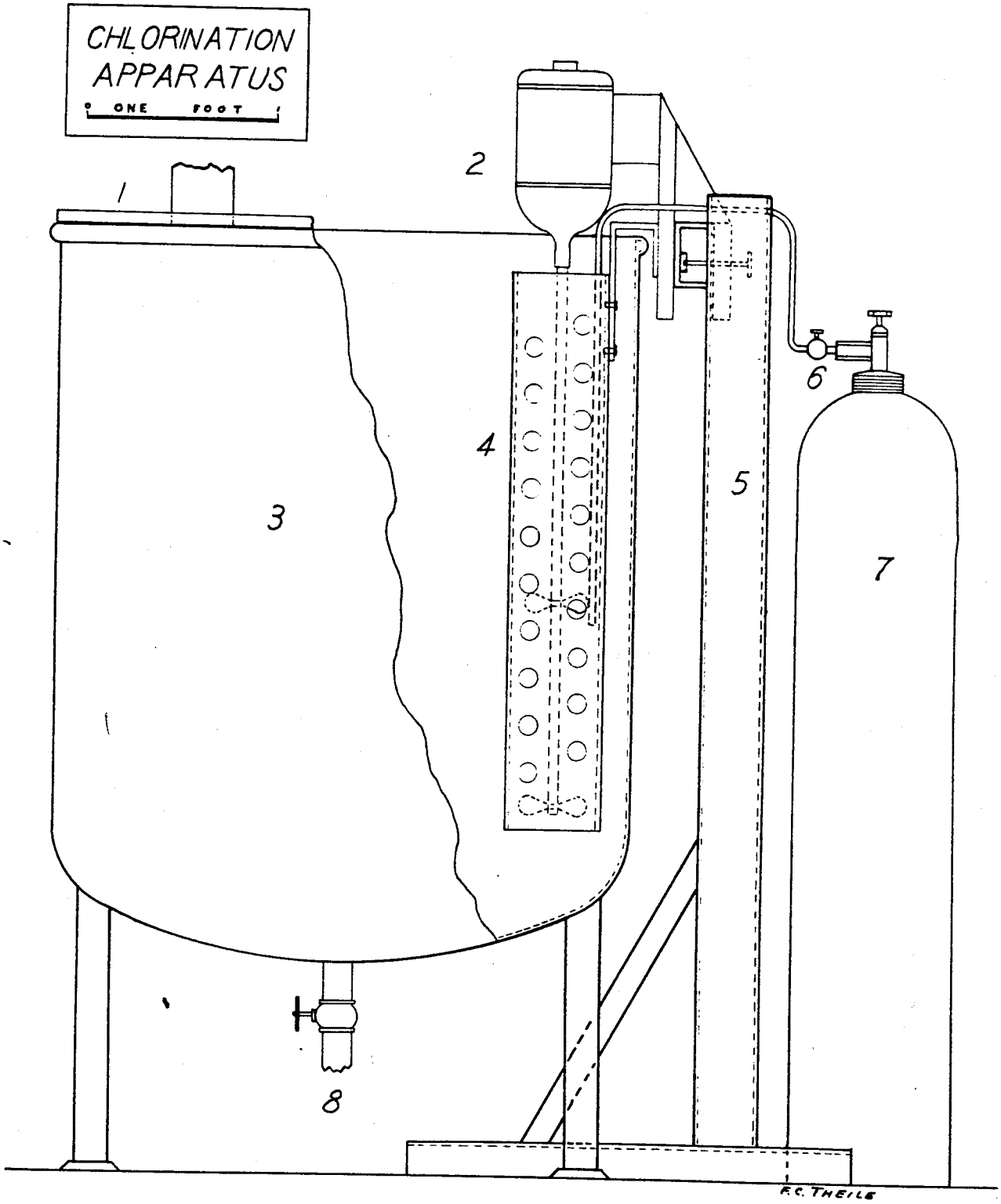

Appendix B

Equipment, Materials, and Costs

Part I. Description of Equipment

Benzoin Reactor. This unit was built from a 22" x 60" cylindrical iron tank. An iron pipe coil of approximately 4.7 sq. ft. of surface was mounted in the bottom of the tank with connections for steam, cold water, and a drain. A 1/4 H.P. Lightnin mixer was mounted on the top edge of the tank with a long shaft propellor agitator extending nearly to the bottom. The slurry was run out of the tank through a 2" gate valve near the bottom. A removable iron cover fitted with a vent pipe to the hood exhaust system provided adequate ventilation for cyanide and benzaldehyde fumes. This entire unit was mounted on a platform 3 ft. high to provide for gravity discharge to the filter.

Benzoin oxidizer. This unit consisted of a 40 gallon stoneware crock set into a 16 gauge galvanized iron tank 6 inches greater in diameter than the crock. A 1/2 inch steam line running directly into the water-filled jacket maintained the temperature at 95 to 98°C. The jacket water level was kept constant by a 1/2 inch overflow pipe to the drain. A 2 inch gate valve and pipe leading to the drain were provided as an emergency drain in the jacket in the event that the crock should crack and release nitric acid.

A 1/4 inch aluminum cover with openings for a reflux condenser, thermometer, light, agitator shaft, and loading port was clamped to the crock. A 1/3 H.P. motor with a 4 inch glass propeller was mounted on the cover. This agitator was found to be unnecessary and was later discarded. A two inch glass cold finger reflux condenser three feet in length was mounted vertically on the cover. From the top of the condenser a two inch glass pipe conducted the oxides of nitrogen to the absorption tower. This entire unit was mounted on a platform three feet high to allow removal of the benzil by gravity flow through a siphon.

Absorption Tower. Three 12 inch sewer tiles were mounted vertically and were packed with irregular pieces

of broken tile to provide a 6 foot absorption tower for oxides of nitrogen. A ceramic cover and water spray head completed the unit.

S-330 Base Reactor. This unit was a 50 gallon glass-lined Pfaudler jacketted kettle. It was 28 inches in diameter by 30 inches high and was equipped with a vertical agitator, a 2 inch drain valve and standard pipe legs. The glass lined cover of the tank had a 4 inch x 5 inch loading port with a 2 inch diameter peep-sight in it, one 1-1/2 inch and one 3 inch flanged connection and an adjustable baffle. The mixer consisted of a 3 bladed glass coated impeller type agitator driven by a belted 1/3 HP motor at 80 rpm. Connections to the jacket of the tank were such that either cooling water or steam up to 40 lb. pressure could be admitted. A thermostatically controlled steam valve was provided so that the jacket could be filled with water and the temperature controlled by intermittent steam flow. An 18 tube iron condenser 5 feet in length with 13 sq. feet of cooling surface was mounted vertically above the reactor. Connections were such that the condensate could be returned to the reactor or run into solvent storage tanks.

Tanks

Separation Tank. This was a Pfaudler 100 gallon plain glass-lined tank equipped with a 1 inch stainless steel bottom outlet valve. A 1/4 HP Lightnin Mixer was mounted on a steel stand placed beside the tank. Two calibrated 5 gallon glass bottles placed on a shelf beside the tank were used to meter out the concentrated hydrochloric acid and ammonium (or sodium) hydroxide.

S-330 Base Precipitation Tank. This was a 100 gallon plain iron tank 22 inches by 60 inches with a 1 inch bottom drain valve. A 1/4 HP Lightnin mixer was mounted on the edge of the tank.

Chlorination Tank. This was a Pfaudler 100 gallon plain glass-lined tank equipped with a 1 inch stainless steel bottom outlet valve. A 1/4 HP Lightnin Mixer, mounted on a steel stand placed beside the tank was fitted with a shaft having two 3 inch propellors running inside of a 4 inch by 24 inch Bakelite tube perforated with a number of 1 inch holes. A 1/4 inch Bakelite

tube ending close to the upper propellor was used to run chlorine into the solution.

Solvent Storage Tanks. Two 55 gallon iron drums were mounted horizontally in a wooden rack for solvent storage.

Washing Tanks. The benzil and benzoin were washed in 55 gallon wooden barrels equipped with 1/4 HP propellor agitators.

Filters

Benzoin and Benzil Filters. Each of these filters was 23 inches in diameter and 17 inches deep holding about 3.5 cu. ft. of precipitate. A heavy filter cloth mounted over a supporting screen gave 2.9 sq. ft. of filtering surface. A 3/4 inch drain pipe led to a 55 gallon iron vacuum drum.

Horizontal Plate Filter. This unit was an 18 inch Model 18-D-4 Sparkler Horizontal Plate Filter with plastic-lined tank and four hard-rubber plates.

By-Product Filter. This unit was a 24 inch Schriver plate and frame filter with 25 plates and 25 frames. The slurry was pumped with a 1-1/2" iron centrifugal pump coupled directly to a 2 HP three-phase motor. A 3/4" iron centrifugal pump coupled directly to a 1/4 HP motor pumped the filtrate from the trough to the precipitation tank. Connections were provided for recycling of filtrate, washing with water, and blowing the press with compressed air.

Driers

Four wooden tray driers each 3 feet square and 5 feet high were heated to 60°C by an outside high pressure steam radiator. Each drier contained eight wooden trays spaced 6 inches apart and a centrifugal blower of 50 cubic feet per minute capacity to drive the effluent air out of the building.

UNCLASSIFIED

Part II. Equipment Costs and Sources.

Filter, Model 18-D-4, Sparkler Horizontal Plate with Lastiglas Tank and 4 hard rubber plates. The Sparkler Mfg. Co.	$345.00
Reactor, Pfaudler jacketted glass-lined 50 gal. kettle with impellor type agitator, baffle, glass-lined cover and bottom outlet valve, (Used.)	$450.00
Separation and Chlorination Tanks, Pfaudler glass-lined junior series type, 100 gal. with 1 inch stainless steel bottom outlet valve. The Pfaudler Co. 2 at $126.00	$252.00
Filter, 24 inch Schriver plate and frame with 50 iron plates and frames, manual screw closure, drain trough. (Used.)	$800.00
Pump, Centrifugal 1-1/2 inch iron, with 2 HP 220 volt-3 phase motor and mounting base	$125.00
Pump, Centrifugal all-glass 3/4 inch x 1 inch with a capacity of 600 gallons per hr. Nash Engineering Co.	$230.00
Motor, Electric, 3/4 H.P. 230 volts, Single phase, 1725 RPM. Central Armature Co.	$ 32.00
Stirrers, Electric 1/4 H.P, Lightnin Mixer, 110 volts single phase, 1725 RPM with rubber coated propeller. Mixing Equipment Co. 3 at $35.00	$105.00
Carboy holder, iron frame. Emil Greiner Co. 2 at $16.00	$ 32.00

CONFIDENTIAL

Hose, water, wrapped, 3/4 inch I D. 3 ply with couplings in 25 ft. lengths. Fed. Spec. #22-H-611 100 ft. Washington Navy Hard	$ 14.00
Valve, gate type, "Pilot", all iron with 2 inch screwed ends. Wm. Powell Co. 2 at $10.00	$ 20.00
Valve, solenoid type, 3/8" brass, 150 psi working pressure, 15 watt with strainer. American Instrument Co.	$ 12.50
pH Meter, Beckmann Industrial Model M. National Technical Laboratories	$150.00
Barrels, without top, water-tight wooden, 50 gal. 4 at $4.00	$ 16.00
Shipping drums, "Leverpak" fibre, 23 x 34 inches. The Container Corp. 24 at $10.00	$240.00
Condenser, 60 inches x 10 inches iron with 18 tubes 1/2" I.D. having 13 sq. ft. cooling area. Est.	$150.00
Scales, Fairbanks platform No. 1128, 500 lbs. capacity. Fairbanks, Morse & Co.	$ 19.30
Pumps, Rotary Gear, 3/4 inch iron Worthington type GI - Carey Machinery Co. 5 at $12.00	$ 60.00
Driers, 36" x 36" x 60" wooden cabinet with 8 wooden trays 4 at $25.00 Est.	$100.00
Blowers, Centrifugal 1/300 H.P. 115 Volt 60 Cycle, Aminco Type 4-690. American Instrument Co. 4 at $10.00	$ 40.00

CONFIDENTIAL

Pipe fittings, valves, steam traps, etc., and similar plumbing supplies Est. $300.00

Miscellaneous construction on benzoin reactor, oxidizer, and absorption tower Est. $300.00

Laboratory balances, ovens, glassware, etc., are not included since they were already available.

Part III. Materials and Costs.

1. Benzil
   Supplier: Merck and Co.
   Price: $2.00 lb.

2. Benzaldehyde, tech.
   Supplier: Heyden Chemical Co.
   Price: $0.45 lb.

3. Sodium Hydroxide, technical flake 98%
   Supplier: (a) J.T. Baker Chemical Co.
   (b) Phototechnical Laboratory Inc.
   Price: $0.12 lb.

4. Hydrochloric Acid, technical in carboys
   Supplier: (a) Peebles Chemical Co.
   (b) Phototechnical Laboratory Inc.
   Price: $0.028 lb. (Peebles)
   $0.08 lb. (Phototechnical)

5. Nitric Acid, technical S.G. 1.38 in carboys
   Supplier: J. T. Baker Chemical Co.
   Price: $0.061 lb.

6. Chlorine, in 150 lb. cylinders
   Supplier: Peebles Chemical Co.
   Price: $0.075 lb.

7. Alcohol, grain ethyl U.S.P. in 5 gal. cans.
   Supplier: Washington Navy Yard
   Price: $0.80 gal.

8. Isopropanol, anhydrous 99%.
   Supplier: Carbon and Carbide Chemical Corp.
   Price: $0.40 gal.

9. Sodium Bicarbonate, technical
   Supplier: J. T. Baker Co.
   Price: $0.026 lb.

10. Sodium Carbonate, technical anhydrous
    Supplier: J. T. Baker Co.
    Price: $0.035 lb.

11. Sodium Acetate, technical
    Supplier: Mallinckrodt Chemical Works.
    Price: $0.25 lb.

12. Ammonium Hydroxide (ammoniacal liquor)
    Supplier: Barrett Division, Allied Chemical and Dye.
    Price: $0.033 lb. of NH_3

13. Guanidine Nitrate
    Supplier: American Cyanamid
    Price: $0.30 lb.

14. Guanidine Carbonate
    Supplier: American Cyanamid
    Price: $0.47 lb.

15. Sodium Cyanide
    Supplier: Phototechnical Laboratory Inc.
    Price: $0.20 lb.

Part IV. Labor Requirements.

This pilot plant has been operated on a six-day week, 24 hours per day basis. For this schedule of operations the plant was started at 2400 Sunday night and preliminary shutdown operations were begun at 1500 Saturday afternoon, which allowed time to have the plant completely secured by 1630.

For this type of operation three crews of two men each are required each day, in addition to the supervisor. It was necessary to have one man in the analytical laboratory for 8 hours each day to maintain the schedule of analyses. These analyses do not include the operational control which was performed by the two man crew.

Part V. Production Costs.

The cost of production of S-330 powder is calculated only for materials, utilities, and labor at the rate of 310 lbs. per six day week. (16 shifts). Plant overhead was not considered in these calculations.

Cost per week:

Labor: 6 operators, 1 analyst, 1 supervisor	$400.00
Materials: 6 complete runs	$465.66
Utilities:	$ 10.00
	$875.66
Cost per pound of product:	$ 2.83

CONFIDENTIAL

UNCLASSIFIED

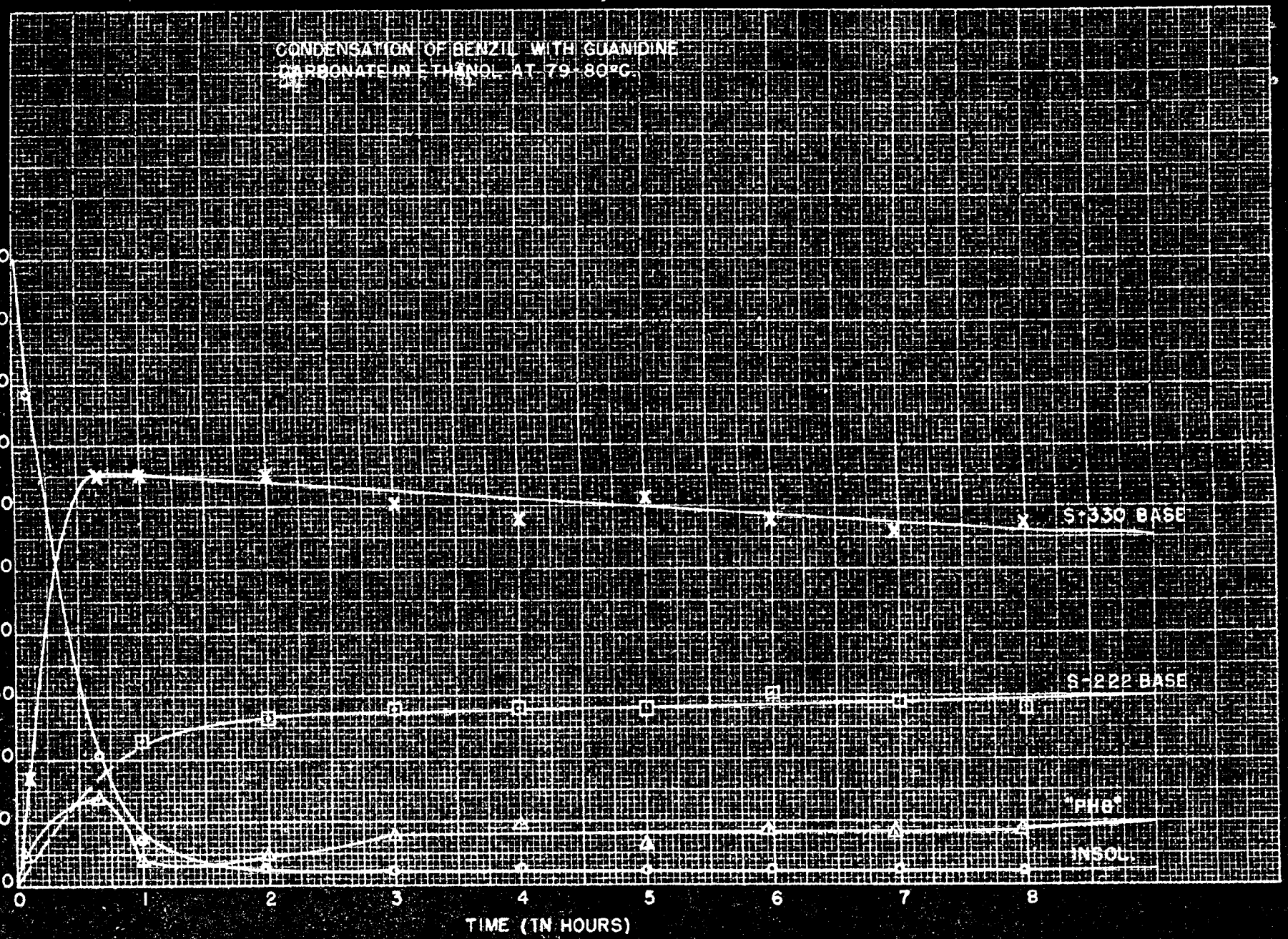

UNCLASSIFIED

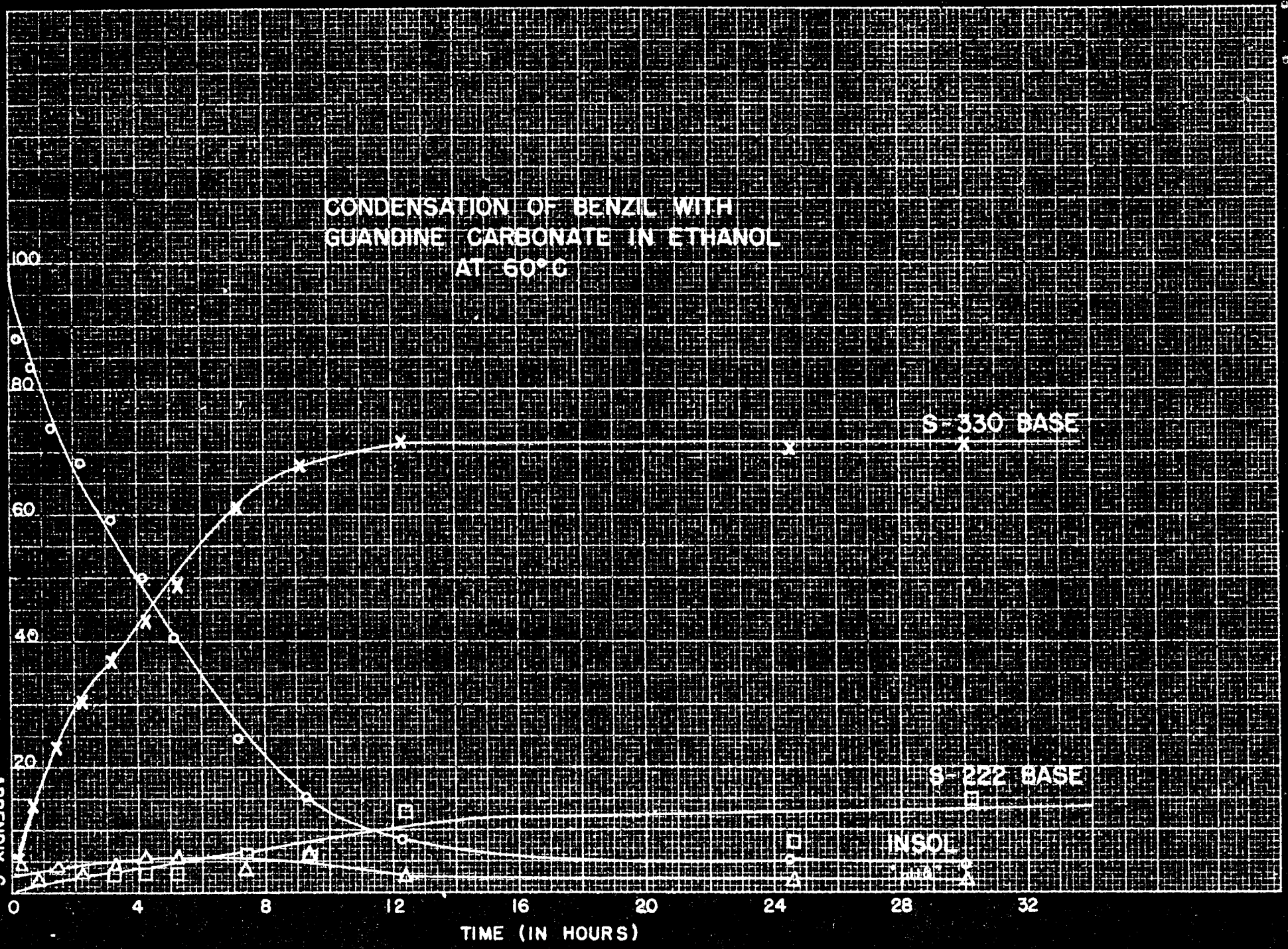
CONDENSATION OF BENZIL WITH
GUANDINE CARBONATE IN ETHANOL
AT 60° C
S-330 BASE
S-222 BASE
INSOL
MOLE PERCENT
100
80
60
40
20
0
4
8
12
16
20
24
28
32
TIME (IN HOURS)

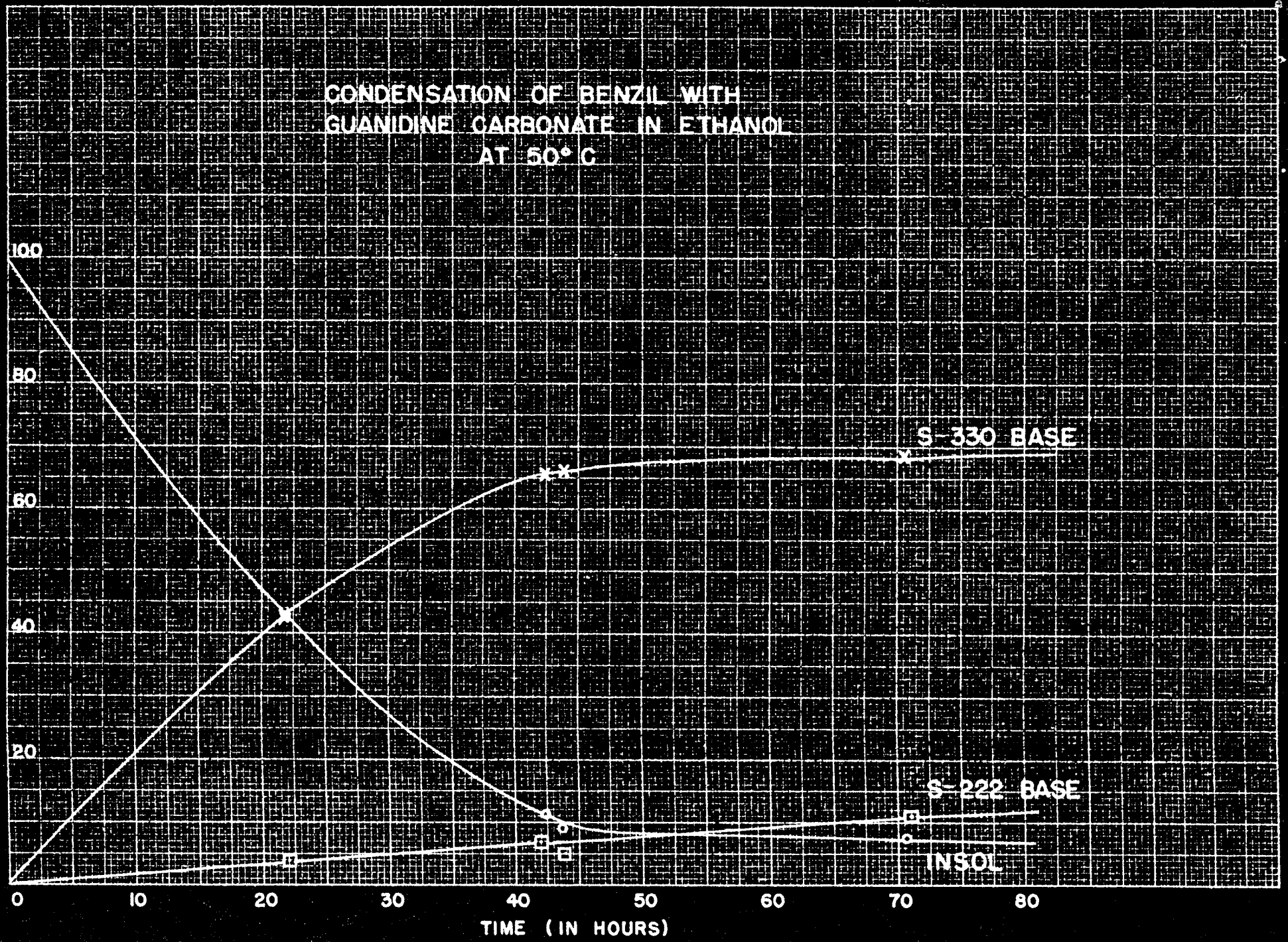
CONDENSATION OF BENZIL WITH
GUANIDINE CARBONATE IN ETHANOL
AT 50° C
MOLE PERCENT
100
80
60
40
20
0
10
20
30
40
50
60
70
80
TIME (IN HOURS)
S-330 BASE
S-222 BASE
INSOL

MADE IN U.S.A.

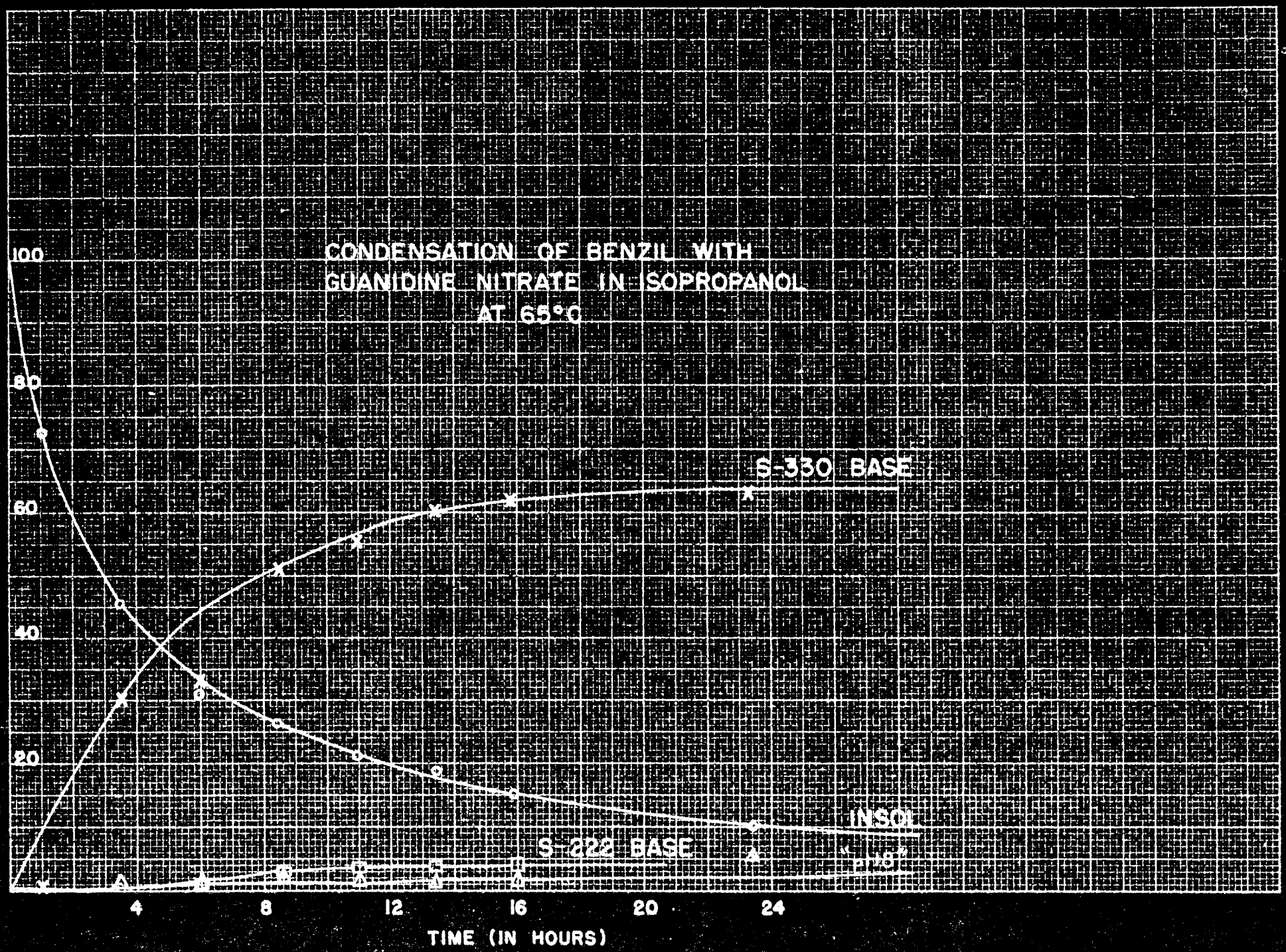
CONDENSATION OF BENZIL WITH
GUANIDINE NITRATE IN ISOPROPANOL
AT 65°C
S-330 BASE
S-222 BASE
(INSOL)
100
80
60
40
20
4
8
12
16
20
24
TIME (IN HOURS)

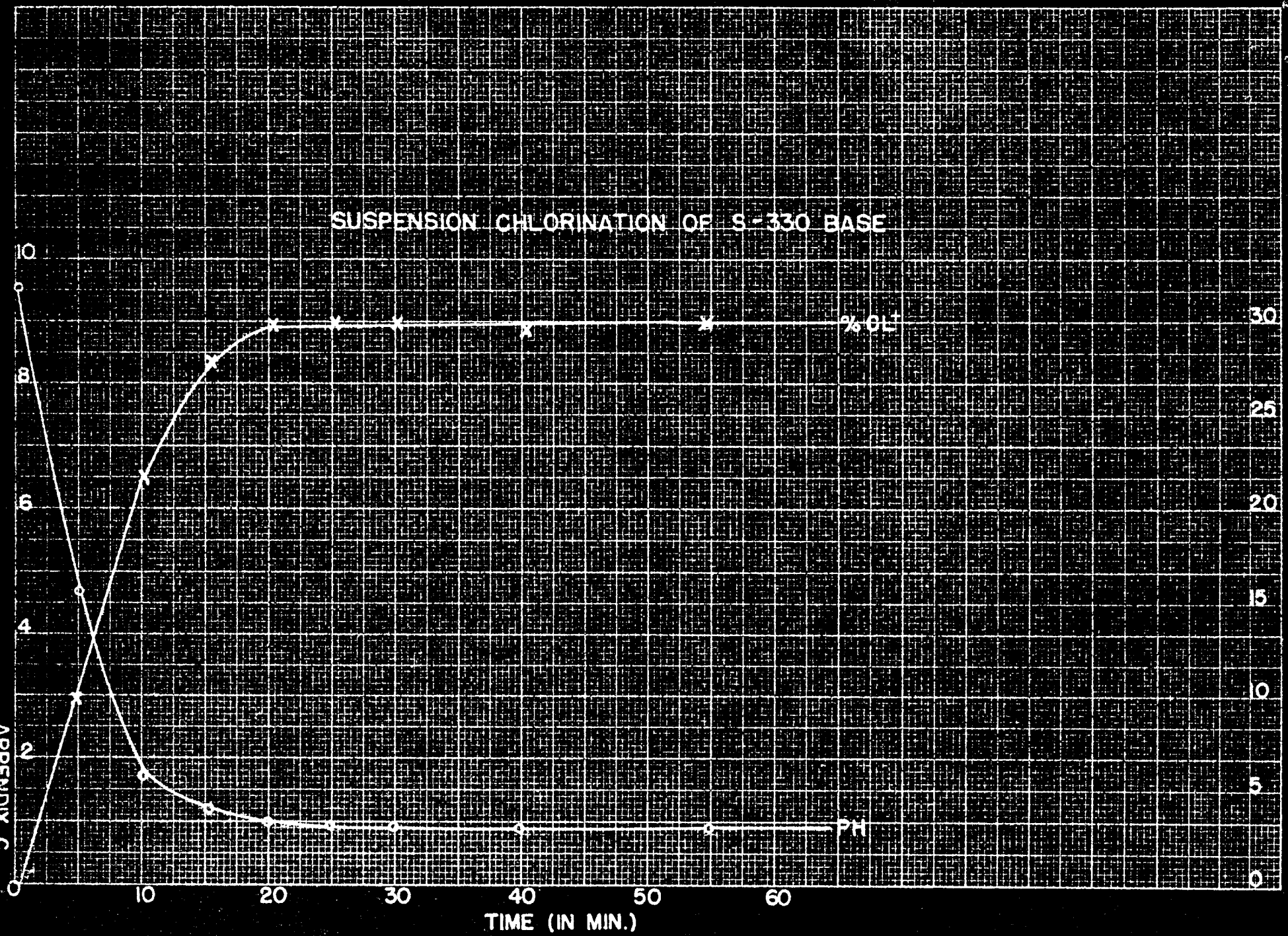

CONFIDENTIAL P-2677

APPENDIX C
PLATE 13

MADE IN U. S. A.

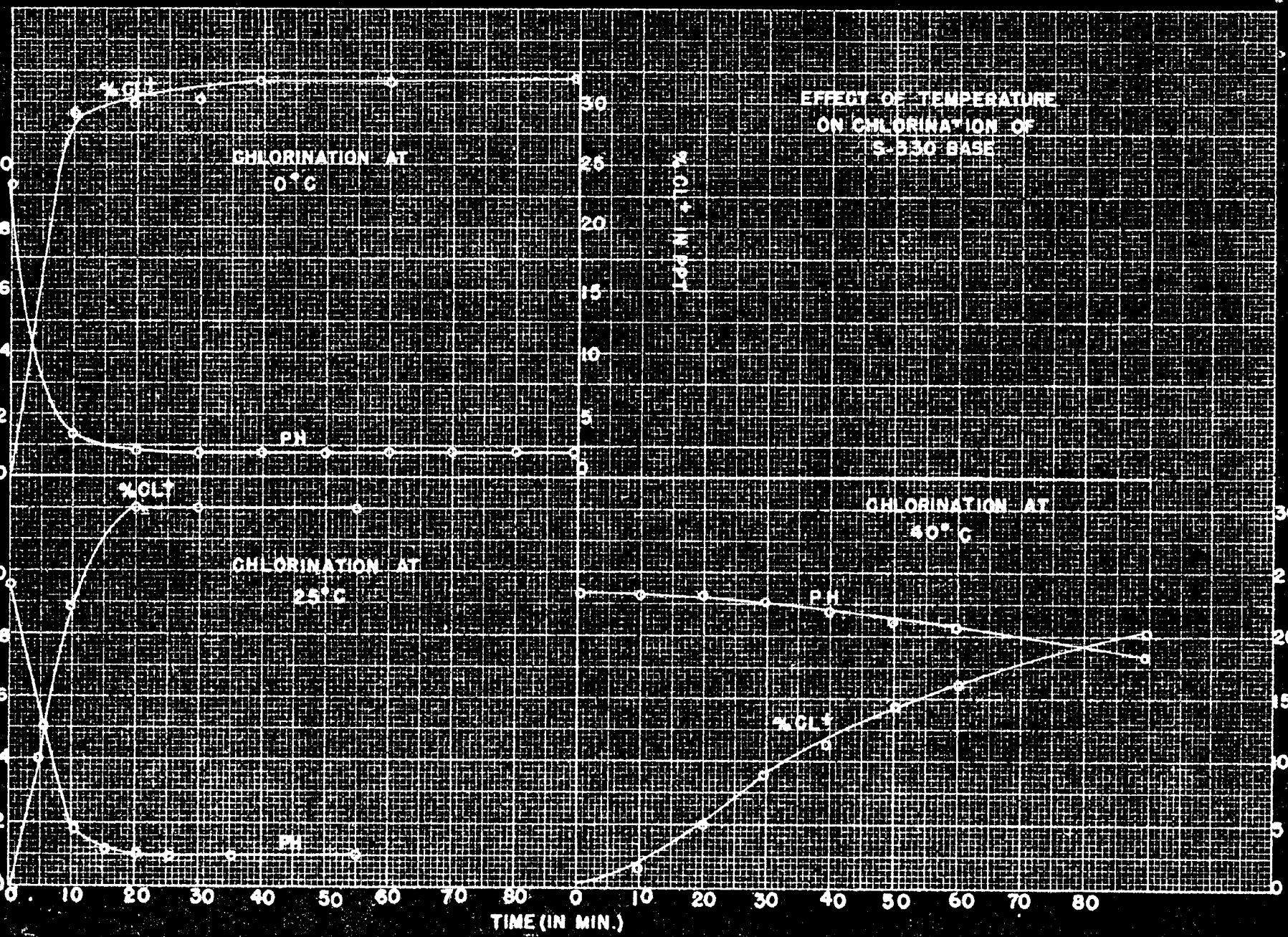
EFFECT OF TEMPERATURE
ON CHLORINATION OF
S-330 BASE
CHLORINATION AT
0°C
CHLORINATION AT
25°C
CHLORINATION AT
40°C
%CL↑
PH
% CL↑ (IN PPM)
TIME (IN MIN.)
0
10
20
30
40
50
60
70
80
2
4
6
8
5
15
25

MADE IN U. S. A.

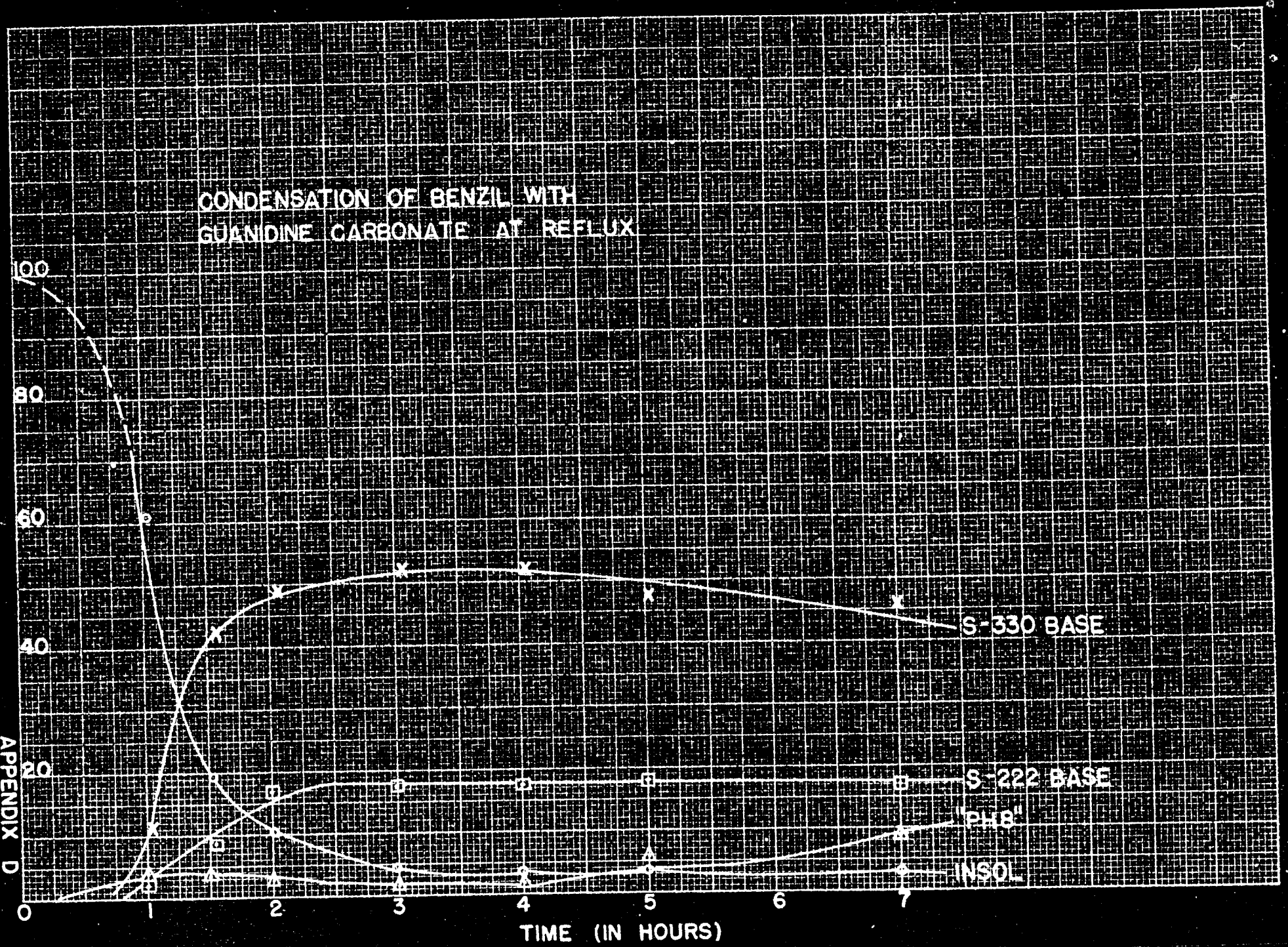
CONDENSATION OF BENZIL WITH
GUANIDINE CARBONATE AT REFLUX
MOLE PERCENT
100
80
60
40
20
0
1
2
3
4
5
6
7
TIME (IN HOURS)
S-330 BASE
S-222 BASE
"PH8"
INSOL

MADE IN U. S. A.

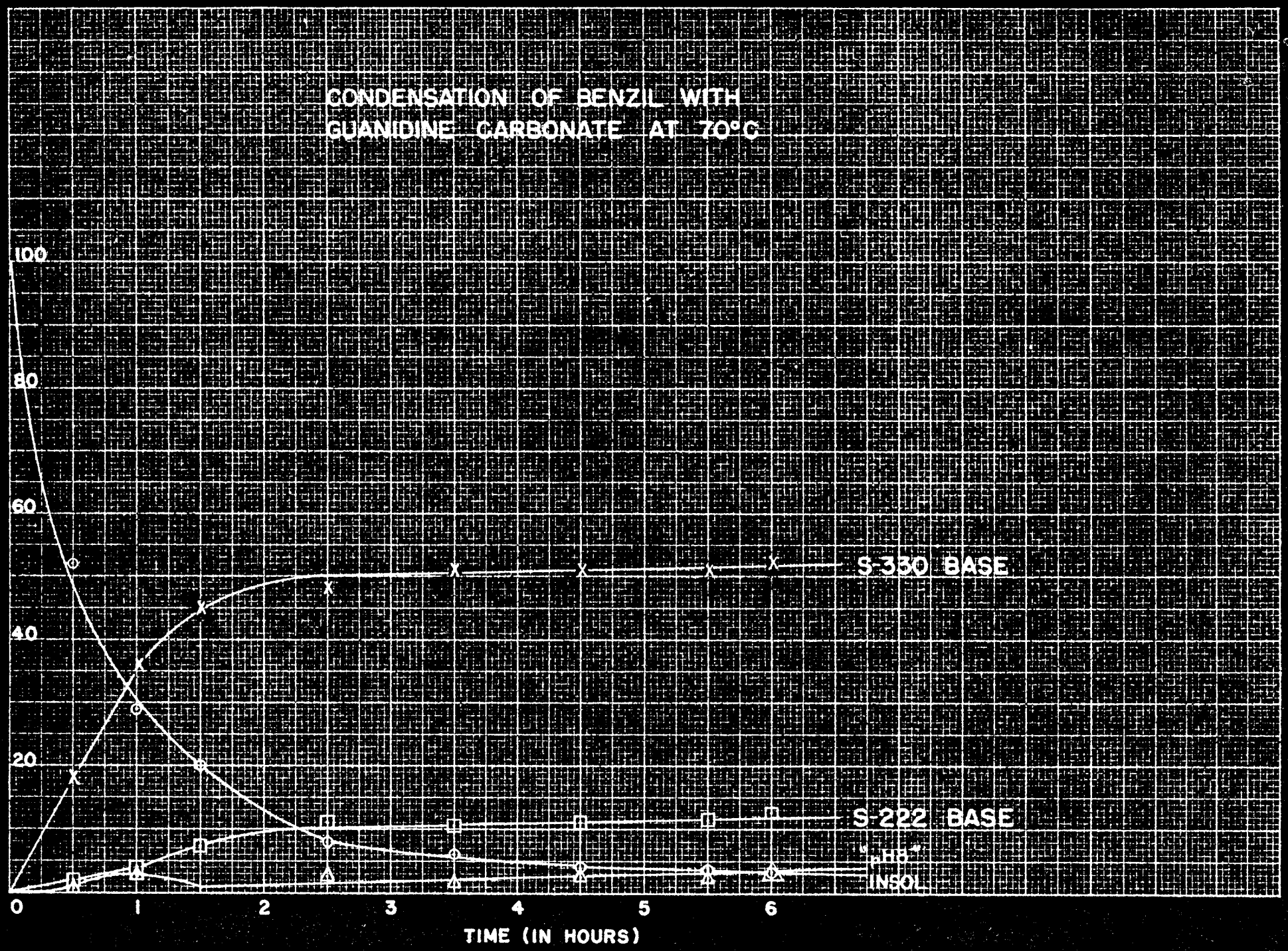
CONDENSATION OF BENZIL WITH
GUANIDINE CARBONATE AT 70°C
MOLE PERCENT
100
80
60
40
20
0
1
2
3
4
5
6
TIME (IN HOURS)
S-330 BASE
S-222 BASE
"HB"
INSOL.

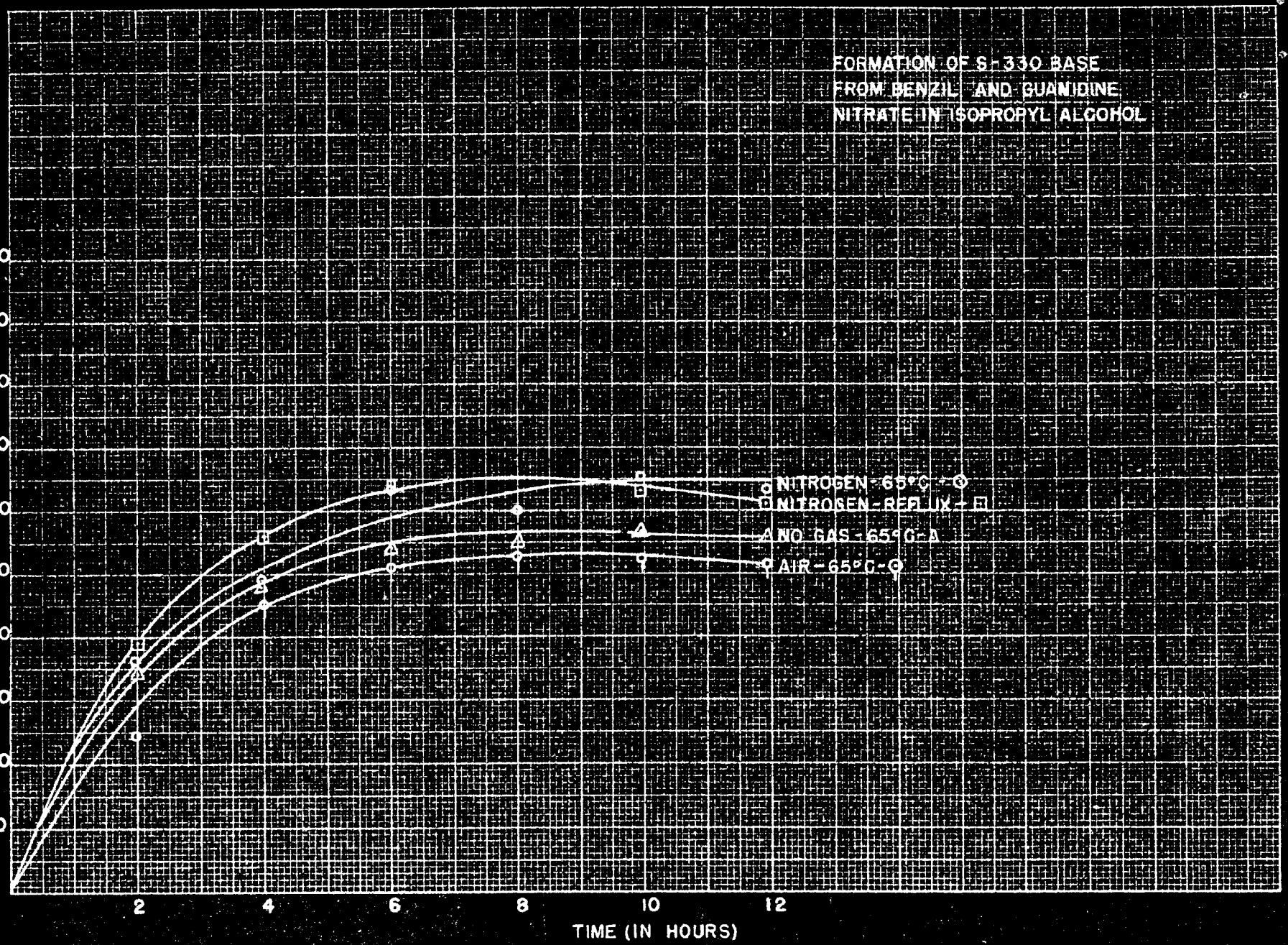

UNCLASSIFIED

MADE IN U. S. A.

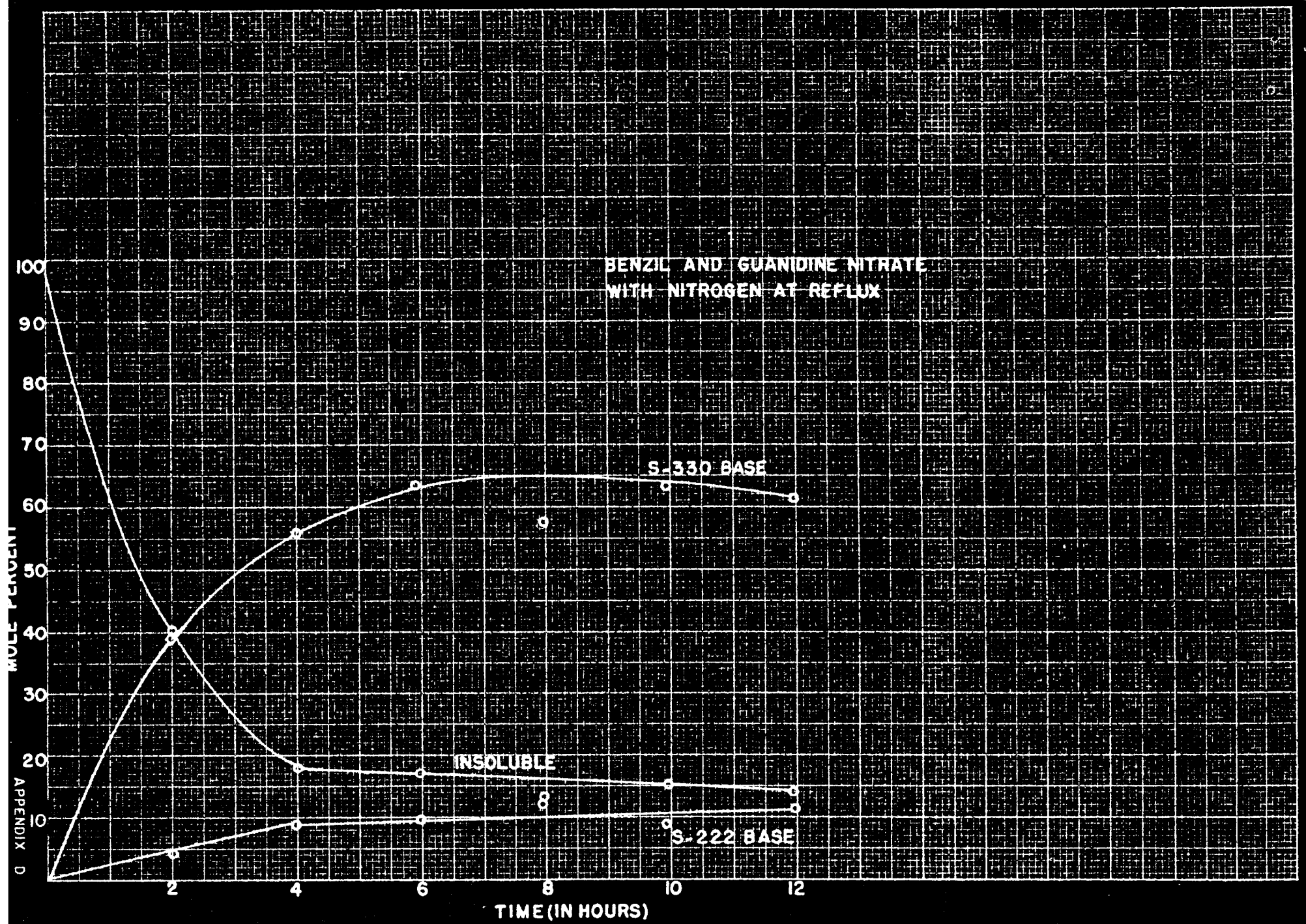

APPENDIX D

UNCLASSIFIED

MADE IN U. S. A.

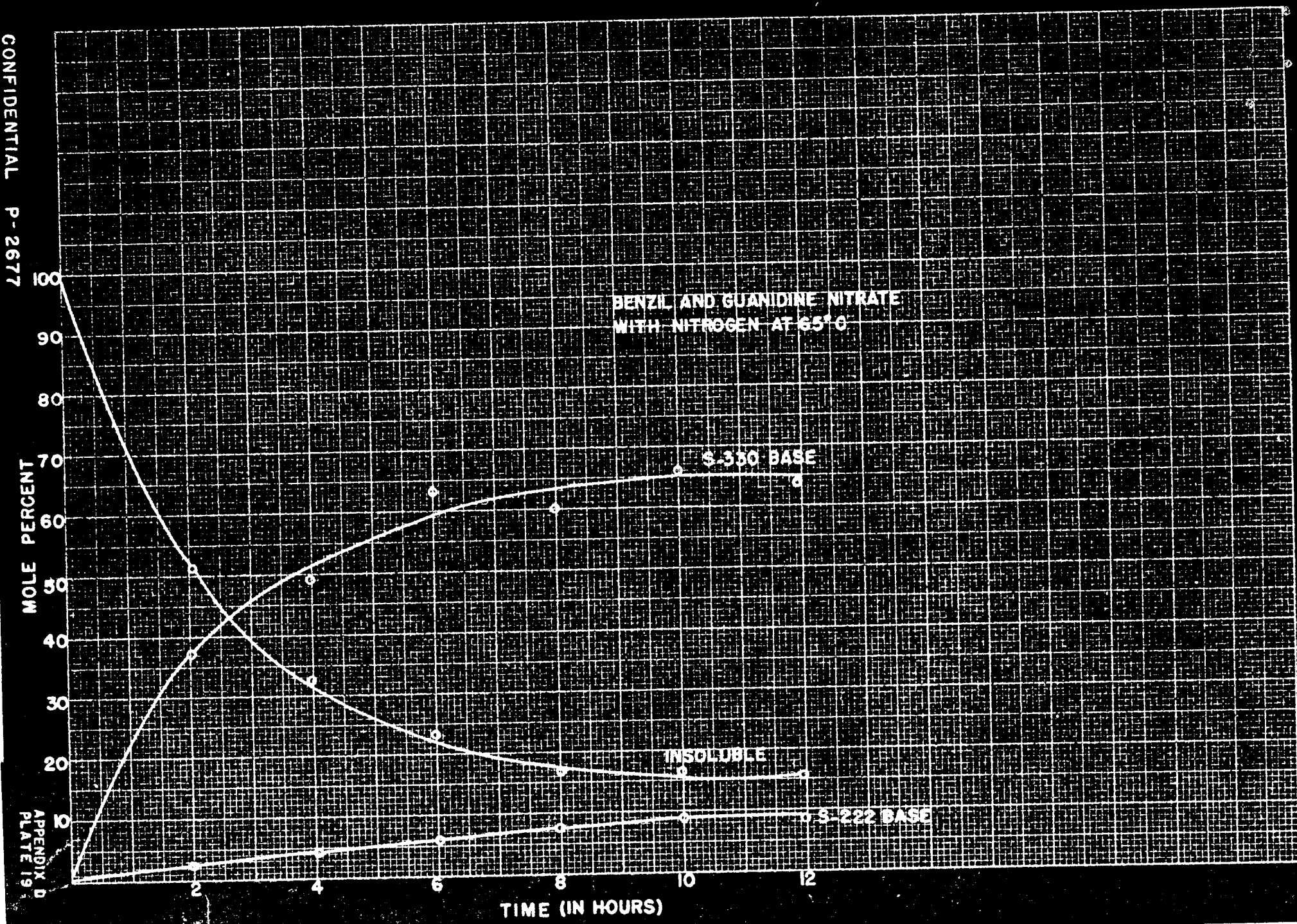
BENZIL AND GUANIDINE NITRATE
WITH NITROGEN AT 65°C
S-330 BASE
INSOLUBLE
S-222 BASE
MOLE PERCENT
100
90
80
70
60
50
40
30
20
10
2
4
6
8
10
12
TIME (IN HOURS)