UNCLASSIFIED

NRL Report 6075

Design Considerations for Two-Dimensional Symmetric Bootlace Lenses

M. L. Kales and R. M. Brown

Microwave Antennas and Components Branch
Electronics Division

May 18, 1964

U.S. NAVAL RESEARCH LABORATORY
Washington, D.C.

U.S. NAVAL RESEARCH LABORATORY
Washington, D.C.

CONTENTS

Abstract 1
Problem Status 1
Authorization 1

INTRODUCTION 1

DERIVATION OF THE EQUATIONS
OF THE LENS CONTOUR 1

DEMONSTRATION THAT THE R-2R BOOTLACE
LENS IS THE ONLY ONE HAVING THREE OR
MORE PAIRS OF OFF-AXIS FOCAL POINTS 6

CONCLUSION 14

Design Considerations for Two-Dimensional Symmetric Bootlace Lenses

M. L. KALES AND R. M. BROWN

Microwave Antennas and Components Branch
Electronics Division

It is generally known that a symmetrical bootlace lens having two pairs of conjugate foci can be designed. Additionally, there is a bootlace lens, the R-2R, which focuses perfectly at infinitely many points. It is shown in this report that the R-2R is unique: there are no other perfect bootlace lenses, and in fact, no others with more than two pairs of conjugate off-axis foci.

INTRODUCTION

Because many of the newer radar systems require true time-delay scanning antennas, there has recently been appreciable interest in the bootlace lens,[1,2,3,4] a variation of the metal-plate waveguide lens. In one type of waveguide lens (Fig. 1), rays from the feed incident on the first lens contour C_1 do not obey Snell's Law but are constrained to follow the path provided by the waveguide so that the ray exits at the same distance from the lens axis as it enters (*i.e.*, $y_2 = y_1$). The bootlace lens offers another degree of freedom by using flexible waveguide (usually coaxial cable) as the delay path so that y_1 need not equal y_2.

The usual waveguide lens has three independent parameters: the two lens contours C_1 and C_2 and the variation in index of refraction $n(y)$. Ruze[5] showed that for the waveguide lens lying in the xy plane and symmetric about the x axis, there could be at most three focal points, namely, two conjugate off-axis points F_1 and F_1' and an on-axis point F_0 (Fig. 2).

The flexible transmission lines of the bootlace lens provide an additional parameter which permits the imposition of one more constraint. Gent[2] showed that the bootlace lens (Fig. 3) could have two pairs of conjugate foci, F_1, F_1', and F_2, F_2'. Gent noticed that if the foci lay on a circle of radius R with its center at the vertex of contour C_1, then (a) all the path delays ℓ are equal, (b) C_2 is a circle of radius $2R$, and (c) C_1 is a circle of radius R coincident with the circle on which the focal points lay. He recognized that his lens was equivalent to the R-2R lens[6] which is known to provide perfect focusing for *all* points on the focal arc. It would be valuable to find other such perfect lenses, but unfortunately the R-2R is unique. It is the purpose of this paper to show that there are no other perfect bootlace lenses and, in fact, no others with more than two pairs of conjugate off-axis foci.

DERIVATION OF THE EQUATIONS OF THE LENS CONTOURS

Let F_i and F_i' (with $i = 1,2,3$) denote a pair of symmetrically placed focal points, p_i and p_i' are the distances from F_i and F_i' to any point (x,y) on the first lens contour, w is the electrical length of the line joining the point (x,y) of the first lens contour to the corresponding point (u,v) of the second lens contour, and $\overline{w}$ the electrical length of the line joining the vertices of the two lens contours

NRL Problem R08-38; Project RAV 08R 005/6521/F001-02-02. This is an interim report; work continues on other phases of the problem. Manuscript submitted February 11, 1964.

[1]S.S.D. Jones, H. Gent, and A.A.L. Browne, "Improvements in or Relating to Electromagnetic-Wave Lens and Mirror Systems," British Provisional Patent Specification No. 25926/56, Aug. 1956.

[2]H. Gent, "The Bootlace Aerial," Roy. Radar Estab. J., pp. 44-57, Oct. 1957.

[3]J.L. MacFarland, "Multiple-Beam Constrained Lens," NEREM Record, Northeast Electronics Research and Engineering Meeting, Boston, Mass., pp. 12-13, 1962.

[4]W. Rotman and R.F. Turner, "Wide-Angle Microwave Lens for Line Source Applications," IEEE Trans., pp. 623-632, Nov. 1963.

[5]J. Ruze, "Wide-Angle Metal-Plate Optics," Cambridge Field Station Report E5043, Mar. 1949, Air Materiel Command, Cambridge, Mass.

[6]H.B. Devore and H. Iams, "Microwave Optics Between Parallel Conducting Sheets," *RCA Review* **9**:721-732 (1948).

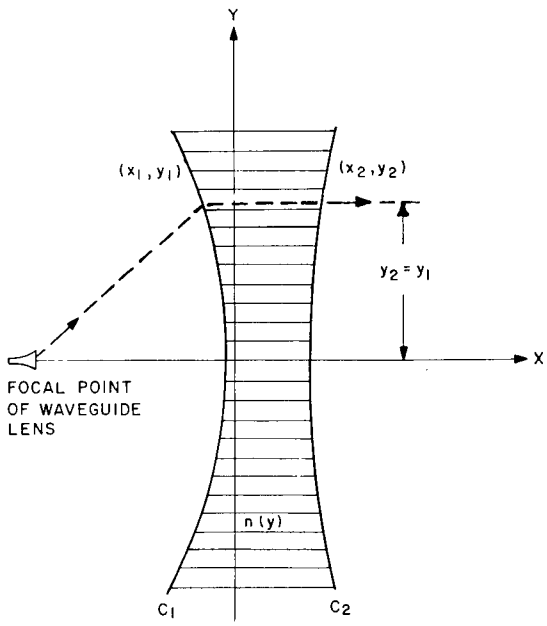

Fig. 1 — Schematic of one type of waveguide lens. The waveguides are arranged parallel to the lens axis so that the rays enter and emerge at the same distance from the lens axis.

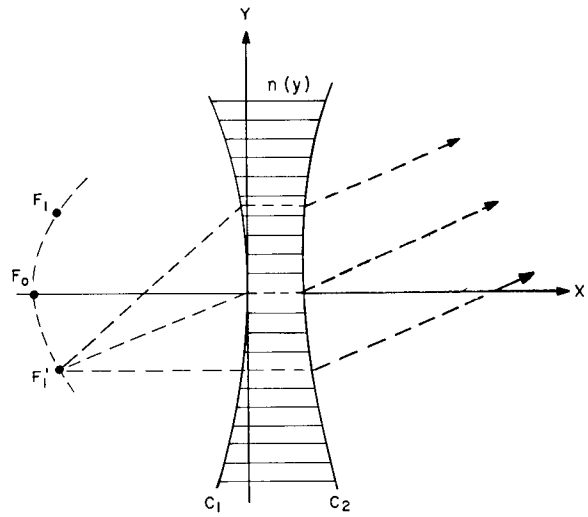

Fig. 2 — Symmetric waveguide lens with three focal points. A lens of the type shown in this figure has *only* three focal points.

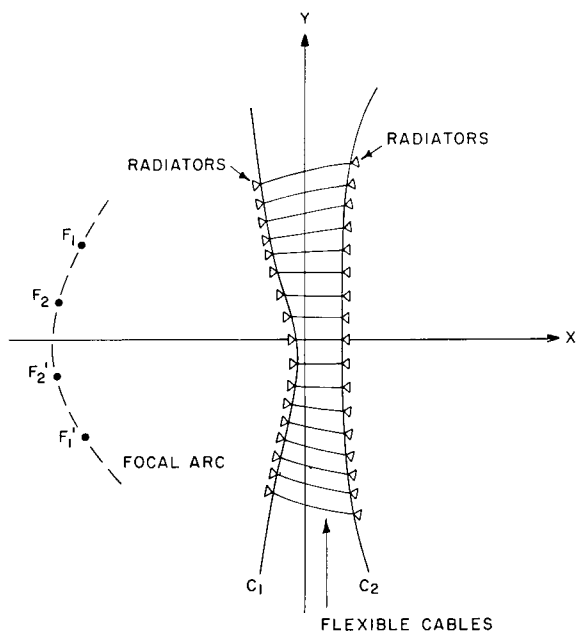

Fig. 3 — Bootlace lens with conjugate foci

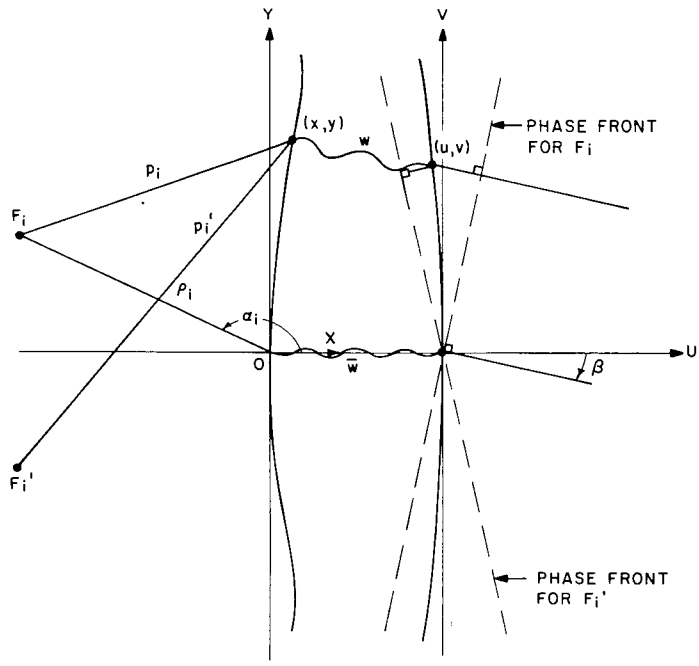

Fig. 4 — Ray-tracing diagram for symmetric bootlace lens

(Fig. 4). Let (ρ_i,α_i) be the polar coordinates of the focal point F_i, and let β_i denote the angle between the lens axis and the normal to the phase front of the beam which emerges when the lens is energized by a point source located at F_i. (Note that we do not assume, as has generally been done, that the direction of the radiated beam makes the same angle with the axis as does the focal radius.)

In order to reduce the considerable amount of detail in the treatment that follows, some mathematical generality, which is not physically significant, will be sacrificed. Thus we shall exclude the relation $y \equiv 0$ or the relation $v \equiv 0$, which correspond, individually, to the case where one of the lens contours degenerates into a straight line segment along the axis of symmetry. We shall also assume that none of the focal points are on the axis of the lens and that, for the focal points F_i, the angles α_i are in the second quadrant and the angles β_i are in the fourth quadrant.

The requirement that the path length from the focal point F_i to the emergent phase front is constant yields the equation

$$p_i + w - u \cos\beta_i - v \sin\beta_i = \rho_i + \overline{w}. \tag{1}$$

The same requirement applied to the focal point F_i', together with the requirement of symmetry, leads to the equation

$$p_i' + w - u \cos\beta_i + v \sin\beta_i = \rho_i + \overline{w}. \tag{2}$$

From Eqs. (1) and (2) we get

$$(p_i)^2 - (p_i')^2 = 4(\rho_i - w + \overline{w} + u \cos\beta_i)\, v \sin\beta_i. \tag{3}$$

In addition,

$$p_i = \sqrt{(x - \rho_i \cos\alpha_i)^2 + (y - \rho_i \sin\alpha_i)^2}$$

and

$$p_i' = \sqrt{(x - \rho_i \cos\alpha_i)^2 + (y + \rho_i \sin\alpha_i)^2}, \tag{4}$$

from which

$$(p_i)^2 - (p_i')^2 = -4\, y\, \rho_i \sin\alpha_i. \tag{5}$$

And since by hypothesis $\rho_i \sin\alpha_i \neq 0$, $y \not\equiv 0$, and $v \not\equiv 0$, it follows from (3) and (5) that, for the ray paths p_i, p_i' and p_j, p_j' drawn from two pairs of conjugate foci,

$$\frac{\rho_i \sin\alpha_i}{\rho_j \sin\alpha_j} = \frac{(\rho_i - w + \overline{w} + u \cos\beta_i) \sin\beta_i}{(\rho_j - w + \overline{w} + u \cos\beta_j) \sin\beta_j} \quad (i,j = 1,2,3;\ \ i \neq j). \tag{6}$$

Since (6) must be true for all corresponding points of the two lens contours, it must be true in particular when the corresponding points are the two vertices, *i.e.*, when $u = 0$ and $w - \overline{w} = 0$. Substituting these values in (6) we get

$$\frac{\sin\alpha_i}{\sin\alpha_j} = \frac{\sin\beta_i}{\sin\beta_j}. \tag{7}$$

Thus we see that although the directions of the emerging beams need not be the same as the directions of the focal radii, the corresponding directions are nevertheless constrained in accordance with (7).

For later use we will derive some additional relations. Substituting (7) into (6), we get the relation

$$(\rho_i - \rho_j)\ (w - \overline{w}) = u(\rho_i \cos\beta_j - \rho_j \cos\beta_i). \tag{8}$$

Subtracting (2) from (1) gives

$$p_i - p_i' = 2v \sin\beta_i. \tag{9}$$

Hence

$$\frac{p_i - p_i'}{p_j - p_j'} = \frac{\sin\beta_i}{\sin\beta_j} = \frac{\sin\alpha_i}{\sin\alpha_j}$$

or

$$\frac{p_i - p_i'}{\sin\alpha_i} = \frac{p_j - p_j'}{\sin\alpha_j}. \tag{10}$$

From (5) we obtain

$$\frac{(p_i)^2 - (p_i')^2}{\rho_i \sin\alpha_i} = \frac{(p_j)^2 - (p_j')^2}{\rho_j \sin\alpha_j}.$$

Combining this result with (10) gives

$$\frac{p_i + p_i'}{\rho_i} = \frac{p_j + p_j'}{\rho_j}. \tag{11}$$

Squaring (10) and (11) and rearranging terms gives

$$\sin^2\alpha_j\{(p_i)^2 + (p_i')^2\} - \sin^2\alpha_i\{(p_j)^2 + (p_j')^2\} = 2\{(\sin^2\alpha_j)\, p_i p_i' - (\sin^2\alpha_i)\, p_j p_j'\}$$

and

$$\rho_j^2\{(p_i)^2 + (p_i')^2\} - \rho_i^2\{(p_j)^2 + (p_j')^2\} = 2\{-\rho_j^2\, p_i p_i' + \rho_i^2\, p_j p_j'\}.$$

Eliminating $p_j p_j'$ from these two equations yields

$$(\rho_i^2 \sin^2\alpha_j + \rho_j^2 \sin^2\alpha_i)\{(p_i)^2 + (p_i')^2\} - 2\rho_i^2 \sin^2\alpha_i\{(p_j)^2 + (p_j')^2\}$$
$$= 2(\rho_i^2 \sin^2\alpha_j - \rho_j^2 \sin^2\alpha_i)\, p_i p_i'. \tag{12}$$

Substituting from (4) into the left side of (12) gives

$$(x^2 + y^2)\{\rho_i^2\sin^2\alpha_j + \rho_j^2\sin^2\alpha_i - 2\rho_i^2\sin^2\alpha_i\}$$
$$+ x\{4\rho_j(\cos\alpha_j)\rho_i^2(\sin^2\alpha_i) - 2\rho_i(\cos\alpha_i)(\rho_i^2\sin^2\alpha_j + \rho_j^2\sin^2\alpha_i)\}$$
$$+ \rho_i^2(\rho_i^2\sin^2\alpha_j - \rho_j^2\sin^2\alpha_i) = (\rho_i^2\sin^2\alpha_j - \rho_j^2\sin^2\alpha_i)\, p_i p_i'. \tag{13}$$

By squaring both sides of (13), the equation of the first lens contour is obtained in a form free of radicals. If we now let $i = 1$ and $j = 2$, Eq. (13) can be written as follows:

$$a_0 y^4 + (2a_0x^2 + 2a_1x + a_3)y^2 + (a_0x^4 + 2a_1x^3 + a_2x^2 + a_4x) = 0, \tag{14}$$

where

$$a_0 = (\rho_2^2 - \rho_1^2)(\sin^2\alpha_2 - \sin^2\alpha_1)$$

$$a_1 = (\rho_1\cos\alpha_1 + \rho_2\cos\alpha_2)(\rho_1^2\sin^2\alpha_2 + \rho_2^2\sin^2\alpha_1) - 2\rho_1\rho_2(\rho_1\cos\alpha_2\sin^2\alpha_1 + \rho_2\cos\alpha_1\sin^2\alpha_2)$$

$$a_2 = 4\rho_1\rho_2(\rho_2\cos\alpha_1 - \rho_1\cos\alpha_2)(\rho_1^2\sin^2\alpha_2\cos\alpha_1 - \rho_2^2\sin^2\alpha_1\cos\alpha_2) + (\rho_2^2 - \rho_1^2)(\rho_1^2\sin^2\alpha_2 - \rho_2^2\sin^2\alpha_1)$$

$$a_3 = (\rho_1^2\sin^2\alpha_2 - \rho_2^2\sin^2\alpha_1)(\rho_2^2\cos^2\alpha_1 - \rho_1^2\cos^2\alpha_2)$$

$$a_4 = 2\rho_1\rho_2(\rho_1\cos\alpha_2 - \rho_2\cos\alpha_1)(\rho_1^2\sin^2\alpha_2 - \rho_2^2\sin^2\alpha_1). \tag{15}$$

It is interesting to note that Eq. (14) for the first lens contour depends on the coordinates of the foci, but not on the directions of the emerging beams.

By adding (1) and (2) we find that

$$w - \overline{w} - u\cos\beta_i = \rho_i\left(1 - \frac{p_i + p_i'}{2\rho_i}\right). \tag{16}$$

Equations (8), (9), and (16) can now be solved for $w - \overline{w}$, u, and v giving, respectively,

$$w - \overline{w} = \left(1 - \frac{p_i + p_i'}{2\rho_i}\right)\left(\frac{\rho_i\cos\beta_j - \rho_j\cos\beta_i}{\cos\beta_j - \cos\beta_i}\right) \tag{17a}$$

$$u = \left(1 - \frac{p_i + p_i'}{2\rho_i}\right)\left(\frac{\rho_i - \rho_j}{\cos\beta_j - \cos\beta_i}\right) \tag{17b}$$

$$v = \frac{p_i - p_i'}{2\sin\beta_i}. \tag{17c}$$

If (14) is solved for y in terms of x and the result is substituted in (17), the lengths of the bootlaces and the coordinates of the points on the second lens contour are then expressed in terms of x as a parameter. (Note that by virtue of (11), the factor $(p_i + p_i')/2\rho_i$ which appears in (16) is independent of the index i.)

Equations (14) and (17) show that the lens is uniquely determined when two pairs of off-axis focal points are prescribed. Before continuing with the principal objective of this paper, it may be of interest to consider the special case where one of the focal pairs coalesces to a single focal point on the axis of symmetry. Let the coordinates of this focal point be (ρ_1, π) and the coordinates of the other focal point which lies in the second quadrant be (ρ_2, α_2). The system of four equations that we get

from (1) and (2) by letting $i = 1$ and 2 then reduces to a system of three equations. Since $p_1 = p_1'$ for a focal point on the axis, it follows from (9) that $\sin\beta_1 = 0$. The three equations for determining the lens contour thus become

$$p_1 + w + u = \rho_1 + \overline{w}$$

$$p_2 + w - u\cos\beta_2 - v\sin\beta_2 = \rho_2 + \overline{w} \tag{1a}$$

$$p_2' + w - u\cos\beta_2 + v\sin\beta_2 = \rho_2 + \overline{w}. \tag{2a}$$

This system has an infinite number of solutions. However, subject to the requirements of symmetry, either of the lens contours may be prescribed arbitrarily, and the other contour, together with the connecting path lengths, may then be determined. Alternatively, the path differences $w - \overline{w}$ can be prescribed as a function of one of the variables x, y^2, u, or v^2, and the two lens contours are then determined. It is not immediately obvious that the solutions will satisfy the symmetry requirements. That the symmetry requirements are met can be seen by noting that if the transformations:

$$x \to x,\ y \to -y,\ u \to u,\ v \to -v,\ w \to w$$

are made, then $p_1 \to p_1$, and $p_2 \leftrightarrow p_2'$. These transformations transform the system of Eqs. (1a) and (2a) into itself, and thus the symmetry requirements are satisfied.

DEMONSTRATION THAT THE R-2R BOOTLACE LENS IS THE ONLY ONE HAVING THREE OR MORE PAIRS OF OFF-AXIS FOCAL POINTS

We return now to the general case where none of the focal points lie on the axis of the lens. As we have seen, the lens is uniquely determined when two pairs of foci, together with the directions of the emerging beams, are prescribed. We shall now show that if the lens possesses a third pair of foci not on the axis, it must be the so-called R-2R lens.

If there exist three pairs of foci, any two pairs may be used to determine the lens. Thus two additional equations similar to (14) may be obtained for the first lens contour. These three equations, including (14) which is repeated here for convenience, are:

$$a_0y^4 + (2a_0x^2 + 2a_1x + a_3)y^2 + (a_0x^4 + 2a_1x^3 + a_2x^2 + a_4x) = 0 \tag{18a}$$

$$b_0y^4 + (2b_0x^2 + 2b_1x + b_3)y^2 + (b_0x^4 + 2b_1x^3 + b_2x^2 + b_4x) = 0 \tag{18b}$$

$$c_0y^4 + (2c_0x^2 + 2c_1x + c_3)y^2 + (c_0x^4 + 2c_1x^3 + c_2x^2 + c_4x) = 0. \tag{18c}$$

The coefficients b_k can be obtained by replacing the a_k in Eq. (15) by b_k, and changing the subscripts 1 and 2 on the right to 2 and 3, respectively. Similarly, the c_k can be defined by replacing a_k by c_k, and changing the subscripts 1 and 2 to 3 and 1, respectively.

We now impose the requirement that Eqs. (18a), (18b), and (18c) define the same curve. We shall show first that the leading coefficient in each of these equations is different from zero. Because of the similarity of the equations, it will clearly suffice to show that $a_0 \neq 0$.

Since $a_0 = (\rho_2^2 - \rho_1^2)(\sin^2\alpha_2 - \sin^2\alpha_1)$, it follows that $a_0 = 0$ only if (a) $\rho_2 = \rho_1$ or (b) $\sin\alpha_2 = \sin\alpha_1$. Suppose first that case (a) is valid, *i.e.*, $\rho_2 = \rho_1$. Substituting this relation in (8) gives $u\rho_1(\cos\beta_2 - \cos\beta_1) = 0$. This is possible only if $\cos\beta_2 = \cos\beta_1$ or if $u \equiv 0$. If $\cos\beta_2 = \cos\beta_1$, then $\sin\beta_2 = \sin\beta_1$, and it then follows from (7) than $\sin\alpha_1 = \sin\alpha_2$. This would require that the two distinct foci F_1 and F_2 be coincident. On the other hand, suppose that $u \equiv 0$. Then it follows from (8) that either $w - \overline{w} \equiv 0$ or $\rho_1 = \rho_2 = \rho_3$. If $w - \overline{w} \equiv 0$, then by adding (1) and (2) we find that, for $i = 1$ and 2, $p_1 + p_1' = 2\rho_1$, and $p_2 + p_2' = 2\rho_2 =$

$2\rho_1$. The first of these equations represents an ellipse with foci at F_1, F_1', and the second represents an ellipse with foci at F_2, F_2'. However, since each of these equations also represents the first lens contour, both equations must represent the same ellipse. Therefore the focal pair F_1, F_1' must coincide with the focal pair F_2, F_2', which is again a contradiction. If $u \equiv 0$ but $w - \overline{w} \not\equiv 0$, then $\rho_1 = \rho_2 = \rho_3$ and, consequently, $a_0 = 0$ and $b_0 = 0$. From (18a) and (18b) we then obtain

$$y^2 = \frac{-(2a_1x^3 + a_2x^2 + a_4x)}{2a_1x + a_3} \equiv \frac{-(2b_1x^3 + b_2x^2 + b_4x)}{2b_1x + b_3}. \tag{19}$$

Since the foci F_1, F_2, and F_3 are all distinct, and $\rho_1 = \rho_2 = \rho_3$, it follows that no two of the angles α_1, α_2, and α_3 can be equal. Hence $a_3 \neq 0$ and $b_3 \neq 0$. It follows then from (19) that $a_4/a_3 = b_4/b_3$. Upon substituting the defining relations for a_3, a_4, b_3, and b_4 and using the fact that $\rho_1 = \rho_2 = \rho_3$, the last equation reduces to

$$\frac{2\rho_1}{\cos\alpha_2 + \cos\alpha_1} = \frac{2\rho_1}{\cos\alpha_3 + \cos\alpha_2}.$$

Hence $\cos\alpha_1 = \cos\alpha_3$ or $\alpha_1 = \alpha_3$, which leads to the contradiction that $F_1 = F_3$. Thus we see, finally, that the initial assumption that $\rho_1 = \rho_2$ leads to a contradiction.

Suppose next that case (b) is valid, *i.e.*, $\sin\alpha_1 = \sin\alpha_2$. From (7) it follows that $\beta_1 = \beta_2$. If we substitute this result in (1) for the case where $i = 1$ and 2 and subtract the two resulting equations, we find that $p_2 - p_1 = \rho_2 - \rho_1$. It is clear from Fig. 4 that if F_1 and F_2 lie on the same ray through 0 (as they must if $\alpha_1 = \alpha_2$), then the preceding relation can be satisfied only by points on this ray. Such a solution for the first lens contour is unacceptable since it violates the symmetry requirement. We have thus shown that cases (a) and (b) are not valid, and hence $a_0 \neq 0$. For future reference we note that (7) and the fact that $\sin\alpha_i \neq \sin\alpha_j$ imply that $\cos\beta_i \neq \cos\beta_j$ $(i \neq j)$.

In passing, it might be interesting to note that the preceding discussion has shown that if there are more than two pairs of focal points, the focal radii cannot be equal. On the other hand, the proof that two foci cannot lie on the same focal ray is valid even if there are only two pairs of foci.

We return now to the set of Eqs. (18). Since the leading coefficients are not zero, each of the equations has two solutions for y^2 as a function of x. Since each equation of the set must determine the same lens contour, any two of the equations must have at least one common solution. Suppose first that two of the equations have only one solution in common. There is clearly no loss of generality if we assume that the two equations are (18a) and (18b). If we eliminate y^4 from these two equations, we find for the common solution

$$y^2 = \frac{2(a_1b_0 - a_0b_1)x^3 + (a_2b_0 - a_0b_2)x^2 + (a_4b_0 - a_0b_4)x}{(a_0b_1 - a_1b_0)x + (a_0b_3 - a_3b_0)}.$$

Thus we see that y^2 is a rational function of x. On the other hand, solving (18a) for y^2 we get

$$y^2 = \frac{-(2a_0x^2 + 2a_1x + a_3) \pm \sqrt{4(a_1^2 + a_0a_3 - a_0a_2)x^2 + 4(a_1a_3 - a_0a_4)x + a_3^2}}{2a_0}.$$

Since y^2 must be rational in x and, moreover, $y = 0$ when $x = 0$, we see from the last equation that the solution must have the form

$$y^2 = -x^2 + kx, \quad \text{where} \quad k \neq 0.$$

Substituting this solution in (18a) gives

$$(a_0k^2 + 2a_1k + a_2 - a_3)x^2 + (ka_3 + a_4)x = 0.$$

Hence

$$ka_3 + a_4 = 0.$$

Similarly,

$$kb_3 + b_4 = 0 \tag{20}$$

$$kc_3 + c_4 = 0.$$

These relations between the coefficients result from the hypothesis that any two of the set of Eqs. (18) have just one solution in common. If this is not the case, then all three of the Eqs. (18) must have both solutions in common. In this case, the coefficients in any one of the equations differ from those in any other by a constant factor. Hence, constants k_1, k_2, and k_3 exist such that

$$\begin{aligned} b_3 &= k_1 a_3, & b_4 &= k_1 a_4 \\ c_3 &= k_2 a_3, & c_4 &= k_2 a_4 \\ c_3 &= k_3 b_3, & c_4 &= k_3 b_4. \end{aligned} \tag{20'}$$

These relations imply that all two-rowed minors of the matrix

$$\begin{pmatrix} a_3 & b_3 & c_3 \\ a_4 & b_4 & c_4 \end{pmatrix}$$

are zero. Hence, constants m_1 and m_2, not both zero, exist such that

$$m_1 a_3 + m_2 a_4 = 0$$

$$m_1 b_3 + m_2 b_4 = 0$$

$$m_1 c_3 + m_2 c_4 = 0.$$

If we assume that $m_2 \neq 0$ and let $m = m_1/m_2$, then the preceding equations become

$$ma_3 + a_4 = 0$$

$$mb_3 + b_4 = 0 \tag{20''}$$

$$mc_3 + c_4 = 0.$$

(We note that since k in Eq. (20) is not zero, it is clear that if the assumption $m_2 \neq 0$ is replaced by the assumption $m_1 \neq 0$, the relations obtained remain valid if we interchange the subscripts 3 and 4 and replace k by k^{-1}. It will be apparent that this results in a trivial modification to the remainder of the discussion.)

Equations (20) and (20″) show that whether the equations of the set (18) have one or two solutions in common, the same relationships among the coefficients a_3, a_4, etc. are obtained. If we now substitute the defining relations for these coefficients in (20), we obtain the set of equations

$$(\rho_1^2\sin^2\alpha_2 - \rho_2^2\sin^2\alpha_1)\,(\rho_1\cos\alpha_2 - \rho_2\cos\alpha_1)\,[k(\rho_1\cos\alpha_2 + \rho_2\cos\alpha_1) - 2\rho_1\rho_2] = 0 \tag{21a}$$

$$(\rho_2^2\sin^2\alpha_3 - \rho_3^2\sin^2\alpha_2)\,(\rho_2\cos\alpha_3 - \rho_3\cos\alpha_2)\,[k(\rho_2\cos\alpha_3 + \rho_3\cos\alpha_2) - 2\rho_2\rho_3] = 0 \tag{21b}$$

$$(\rho_3^2\sin^2\alpha_1 - \rho_1^2\sin^2\alpha_3)\,(\rho_3\cos\alpha_1 - \rho_1\cos\alpha_3)\,[k(\rho_3\cos\alpha_1 + \rho_1\cos\alpha_3) - 2\rho_3\rho_1] = 0. \tag{21c}$$

We shall now show that

$$\frac{\cos\alpha_1}{\rho_1} = \frac{\cos\alpha_2}{\rho_2} = \frac{\cos\alpha_3}{\rho_3}. \tag{22}$$

This means that all of the factors lying in the second column of the set of Equations (21) must be zero. Since only one factor in each equation needs be zero, it is possible to satisfy the system of equations by letting various combinations of the factors be zero. Suppose, first of all that, two of the factors in the first column are zero. Then the remaining factors in the first column must also be zero. Hence we have

$$\rho_1^2\sin^2\alpha_2 - \rho_2^2\sin^2\alpha_1 = 0 \tag{23a}$$

$$\rho_2^2\sin^2\alpha_3 - \rho_3^2\sin^2\alpha_2 = 0 \tag{23b}$$

$$\rho_3^2\sin^2\alpha_1 - \rho_1^2\sin^2\alpha_3 = 0. \tag{23c}$$

With the aid of (13) the first of these equations leads to the following equation for the first lens contour:

$$\begin{aligned} x^2 + y^2 &= \frac{(2\rho_1\cos\alpha_1\, 2\rho_2^2\sin^2\alpha_1 - 4\rho_2\cos\alpha_2\, \rho_1^2\sin^2\alpha_1)x}{2(\rho_2^2\sin^2\alpha_1 - \rho_1^2\sin^2\alpha_1)} \\ &= \frac{2\rho_1\rho_2(\rho_2\cos\alpha_1 - \rho_1\cos\alpha_2)x}{(\rho_2^2 - \rho_1^2)} \\ &= \frac{2\rho_1\rho_2(\rho_2^2\cos^2\alpha_1 - \rho_1^2\cos^2\alpha_2)x}{(\rho_2\cos\alpha_1 + \rho_1\cos\alpha_2)\,(\rho_2^2 - \rho_1^2)} \\ &= \frac{2\rho_1\rho_2(\rho_2^2 - \rho_1^2 - \rho_2^2\sin^2\alpha_1 + \rho_1^2\sin^2\alpha_2)x}{(\rho_2\cos\alpha_1 + \rho_1\cos\alpha_2)\,(\rho_2^2 - \rho_1^2)} \\ &= \frac{2x}{\dfrac{\cos\alpha_1}{\rho_1} + \dfrac{\cos\alpha_2}{\rho_2}}. \end{aligned} \tag{24a}$$

Similarly, (13) and (23b) lead to the equation

$$x^2 + y^2 = \frac{2x}{\dfrac{\cos\alpha_2}{\rho_2} + \dfrac{\cos\alpha_3}{\rho_3}}. \tag{24b}$$

Equating the right-hand members of (24a) and (24b) we find that

$$\rho_3\cos\alpha_1 = \rho_1\cos\alpha_3. \tag{25}$$

Squaring (25) and combining the result with (23c) we find that $\rho_3^2 = \rho_1^2$, a result which has previously been shown to be impossible.

Thus we see that, at most, one of the factors in the first column of the system of Eqs. (21) can be zero. If so, there is clearly no loss in generality in assuming that it is the first factor in (21a), *i.e.*, that (23a) is valid. It follows that either the second factor of (21b) or (21c) is zero, or that the third factor of both (21b) and (21c) is zero. Let us assume the latter to be true. Then

$$k(\rho_2\cos\alpha_3 + \rho_3\cos\alpha_2) - 2\rho_2\rho_3 = 0 \tag{26b}$$

$$k(\rho_3\cos\alpha_1 + \rho_1\cos\alpha_3) - 2\rho_1\rho_3 = 0. \tag{26c}$$

[Equation (26a) is not written yet. When it is referred to in the pages that follow, it will be of the same form as (26b) and (26c).] Eliminating k between these two equations leads to the result

$$\rho_1 \cos\alpha_2 = \rho_2 \cos\alpha_1.$$

Squaring both sides and combining with (23a) leads to the contradictory result that $\rho_1 = \rho_2$.

We thus conclude that at least one of the second factors in (21b) or (21c) must be zero. Without loss of generality we may assume, then that

$$\rho_2 \cos\alpha_3 - \rho_3 \cos\alpha_2 = 0. \tag{27}$$

If this relation is substituted in the formulas for the coefficients in (18b), the following expressions for the coefficients are obtained:

$$b_0 = \frac{-\rho_2^2}{\cos^2\alpha_2}(\cos^2\alpha_3 - \cos^2\alpha_2)^2; \qquad b_1 = \frac{\rho_2^2}{\cos^3\alpha_2}(\cos^2\alpha_3 - \cos^2\alpha_2)^2;$$

$$b_2 = \frac{-\rho_2^4}{\cos^4\alpha_2}(\cos^2\alpha_3 - \cos^2\alpha_2)^2; \qquad b_3 = 0; \qquad b_4 = 0.$$

If we substitute these expressions for the coefficients in (18b) and then solve, we find that the equation of the first lens contour is

$$x^2 + y^2 = \frac{x}{\left(\dfrac{\cos\alpha_2}{\rho_2}\right)}. \tag{28}$$

Comparing this equation with (24a), which follows from the assumption that (23a) is valid, we see that

$$\frac{2\cos\alpha_2}{\rho_2} = \frac{\cos\alpha_1}{\rho_1} + \frac{\cos\alpha_2}{\rho_2},$$

or

$$\frac{\cos\alpha_2}{\rho_2} = \frac{\cos\alpha_1}{\rho_1}.$$

Combining this result with (27) gives the relation (22), which we wish to prove.

Finally, let us assume that none of the factors in the first column of the set of Eqs. (21) is zero. If two of the factors in the second column of this set are zero, then (22) follows directly. Suppose then that, at most, one of the factors in the second column of the set is zero. Then at least two of the factors in the third column are zero. If all three factors are zero, designate as (26a) the equation obtained by equating the third factor of (21a) to zero. As we have already seen, eliminating k between (26b) and (26c) leads to the relation

$$\rho_1 \cos\alpha_2 = \rho_2 \cos\alpha_1. \tag{29}$$

Similarly, eliminating k between (26a) and (26b) leads to the relation

$$\rho_1 \cos\alpha_3 = \rho_3 \cos\alpha_1.$$

Together, the preceding two equations lead directly to (22), the desired result.

If only two of the factors of the last column of the system of Eqs. (21) are zero, we may then, without loss of generality, assume that Eqs. (26b) and (26c) are satisfied. Then (29) will also be satisfied.

In discussing the system of Eqs. (18) earlier, two cases were considered. In the first case, it was assumed that one pair of equations, regarded as quadratic in y^2, had just one solution in common. For the other case it was assumed that all three equations had two solutions in common. On the basis of the first assumption it was shown that the equation of the first lens contour took the form

$$x^2 + y^2 = kx. \tag{30}$$

A review of the derivation of the set of Eqs. (21) shows that, in this case, the constant k appearing in the preceding equation and the constant k appearing in Eqs. (21) are the same. From (26b) we find that

$$k = \frac{2}{\dfrac{\cos\alpha_2}{\rho_2} + \dfrac{\cos\alpha_3}{\rho_3}}. \tag{31}$$

Substituting this value of k in (30) we get

$$x^2 + y^2 = \frac{2x}{\dfrac{\cos\alpha_2}{\rho_2} + \dfrac{\cos\alpha_3}{\rho_3}}. \tag{32}$$

In precisely the same way that Eqs. (27) and (18b) led to Eq. (28), so Eqs. (29) and (18a) lead to Eq. (28). Comparing (28) and (32) we see that

$$\frac{\cos\alpha_2}{\rho_2} = \frac{\cos\alpha_3}{\rho_3}.$$

Combining this last result with (29) we obtain (22) once again.

Finally we assume that all of the equations of the set (18) have two solutions in common. If (29) is substituted in the formula for a_4, we see that $a_4 = 0$. From (20′), then, it follows that $b_4 = 0$, or what is the same thing,

$$2\rho_2\rho_3\,(\rho_2\cos\alpha_3 - \rho_3\cos\alpha_2)\;(\rho_2{}^2\sin^2\alpha_3 - \rho_3{}^2\sin^2\alpha_2) = 0.$$

The last factor in this equation appears in the first column in the set (21) and, therefore, cannot be zero by hypothesis. Hence

$$\rho_2\cos\alpha_3 - \rho_3\cos\alpha_2 = 0.$$

This equation combined with (29) again yields (22).

We have seen that in order for Eqs. (18a), (18b), and (18c) to have a common solution, it is necessary that Eqs. (21) be satisfied. We have now exhausted all possible ways of satisfying Eqs. (21) formally, and have seen that in each case either a contradiction is obtained or (22) is satisfied. Hence we conclude that a common solution to (18a), (18b), and (18c) is possible only if (22) is true.

Now let $-1/d$ be the common value of $(\cos\alpha_i)/\rho_i$ in (22). Then from (22) it follows that each of the focal points with polar coordinates (ρ_i,α_i) lies on the circle

$$\rho = -d\cos\alpha. \tag{33}$$

We have seen that (27), which is included in (22), leads to (28), namely,

$$x^2 + y^2 = \frac{x}{\dfrac{\cos\alpha_2}{\rho_2}}.$$

Combining this result with (33) gives

$$x^2 + y^2 + dx = 0. \tag{34}$$

Since Eqs. (33) and (34) both represent the same circle, we conclude that if a symmetric bootlace lens has three or more pairs of focal points not on the axis, these focal points must lie on a circle which is also the first lens contour. These results are consistent with the R-2R bootlace lens design. Since the second lens contour is uniquely determined when the first is given, the solution would be complete were it not for the fact that, by hypothesis, the directions of the incident and emergent beams are not required to be the same, as they are in the R-2R case. We are now in a position to prove that these directions must be the same, and that, therefore, the R-2R lens provides the only solution.

Returning to the set of Eqs. (17) we recall that the factor $[1 - (p_i + p_i')/2\rho_i]$ is independent of the index i. Furthermore, because of the way the bootlace lens is constructed, each point (u,v) on the second lens contour corresponds to just one point (x,y) on the first contour. Hence the coordinate u depends only on (x,y) and not on the indices i and j of the pair of foci used in determining the lens contours. If we substitute $\rho_i = -d \cos\alpha_i$ in (17b), we find that

$$\frac{\cos\alpha_i - \cos\alpha_j}{\cos\beta_i - \cos\beta_j} = u \Big/ \left[d \left(1 - \frac{p_i + p_i'}{2\rho_i} \right) \right].^{*} \tag{35}$$

Since the right side of (35) is independent of both i and j, we may equate the left side to a constant K, independent of i and j. If at the same time we let $j = 1$, we get

$$\frac{\cos\alpha_i - \cos\alpha_1}{\cos\beta_i - \cos\beta_1} = K \neq 0 \tag{36}$$

or

$$\cos\alpha_i = K \cos\beta_i + \cos\alpha_1 - K \cos\beta_1. \tag{37}$$

From Eq. (7) it follows that there is a constant M such that

$$\sin\alpha_i = M \sin\beta_i. \tag{38}$$

Squaring (37) and (38) and combining the results leads to the equation

$$(K^2 - M^2)\cos^2\beta_i + 2K(\cos\alpha_1 - K\cos\beta_1)\cos\beta_i + (\cos\alpha_1 - K\cos\beta_1)^2 + M^2 - 1 = 0. \tag{39}$$

If we rewrite (39) in the form

$$a \cos^2\beta_i + b \cos\beta_i + c = 0 \; (i = 1,2,3), \tag{40}$$

we see that we have a system of three linear homogeneous equations in the quantities a, b, and c. If the determinant of the coefficients is different from zero, then a, b, and c must all be zero. The determinant of the coefficients is the well-known Vandermonde determinant

$$\begin{vmatrix} \cos^2\beta_1 & \cos\beta_1 & 1 \\ \cos^2\beta_2 & \cos\beta_2 & 1 \\ \cos^2\beta_3 & \cos\beta_3 & 1 \end{vmatrix} = \prod_{i<j} (\cos\beta_i - \cos\beta_j) \neq 0.$$

* It was shown earlier that $\cos\beta_i \neq \cos\beta_j$ if $i \neq j$.

Hence

$$K^2 - M^2 = 0$$

$$2K\,(\cos\alpha_1 - K\cos\beta_1) = 0$$

$$(\cos\alpha_1 - K\cos\beta_1)^2 + M^2 - 1 = 0. \tag{41}$$

Since $K \neq 0$, it follows that $M^2 = 1$. Substituting this result in (38) and recalling that α_i is in the second quadrant and β_i is in the fourth, we get

$$\sin\alpha_i = -\sin\beta_i \tag{42a}$$

and therefore

$$\cos\alpha_i = -\cos\beta_i. \tag{42b}$$

Thus we see that the incident and transmitted beams are in the same direction.

For the sake of completeness we show that the second lens contour is the second circle of the R-2R system. Substituting (42b) into (35) and (42a) into (17c) we find that

$$(u + d) = \frac{d}{2\rho_i}\,(p_i + p_i') = \frac{p_i + p_i'}{2\cos\alpha_i} \tag{43a}$$

and

$$v = -\frac{(p_i - p_i')}{2\sin\alpha_i}. \tag{43b}$$

Squaring the last two equations and adding we get

$$(u + d)^2 + v^2 = \frac{(p_i)^2 + (p_i')^2 + 2p_ip_i'(\sin^2\alpha_i - \cos^2\alpha_i)}{4\sin^2\alpha_i\cos^2\alpha_i} = \frac{(p_i)^2 + (p_i')^2 - 2p_ip_i'\cos^2\alpha_i}{4\sin^2\alpha_i\cos^2\alpha_i}. \tag{44}$$

Referring to Fig. 5 we see that

$$(p_i)^2 + (p_i')^2 - 2p_ip_i'\cos 2\alpha_i = (2h)^2 = (2d\cos\alpha_i\sin\alpha_i)^2. \tag{45}$$

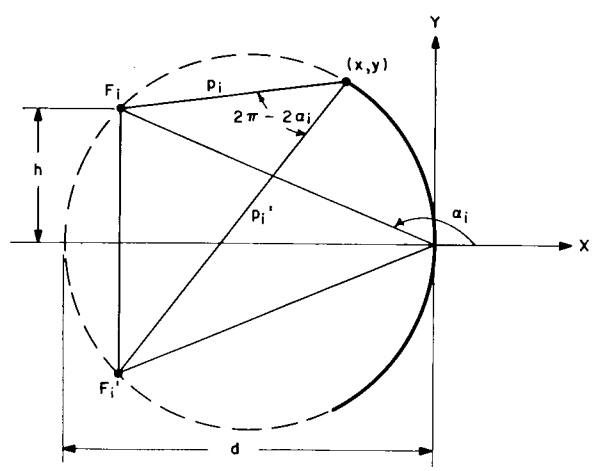

Fig. 5 — Diagram for case where first lens contour is an arc of a circle on which the foci lie

Substituting (45) in (44) we get the equation of the circle

$$(u + d)^2 + v^2 = d^2$$

which we recognize as the second lens contour of the R-2R system with $2R = d$. Finally (17a) and (22) yield the result

$$w = \overline{w}. \tag{46}$$

In other words, the path lengths joining corresponding points of the two lens contours are all equal.

CONCLUSION

It is well known that the two-dimensional symmetric bootlace lens, commonly referred to as the R-2R lens, has the property that perfect focusing can be achieved for infinitely many positions of the point source. This report shows that it is the only such lens having this property; indeed, that it is the only one for which perfect focusing can be achieved for three or more pairs of focal points not on the axis of the lens.

In the course of this demonstration, equations were obtained for the lens contours determined by two pairs of off-axis focal points. It was seen that the directions of the emerging beam could be different from those of the focal radii of the sources, provided the constraint given by Eq. (7) was satisfied. Finally, it was also shown that infinitely many lenses are possible for which a pair of conjugate off-axis focal points and a single on-axis focal point are prescribed.