[redacted]

5430
Br file

NRL Report 4811
Copy No. 54

UNCLASSIFIED

A DECEPTION REPEATER FOR CONICAL-SCAN AUTOMATIC TRACKING RADARS

[redacted]

R. L. Brandenburg

Countermeasures Branch
Radio Division

September 27, 1956

[redacted]

[redacted]

DECLASSIFIED: By authority of
OPNAVINST 5510.1H, 29 APR 88
Cite Authority Date
C. ROGERS 1221.1
Entered by NRL Code

NAVAL RESEARCH LABORATORY
Washington, D.C.

APPROVED FOR PUBLIC RELEASE
DISTRIBUTION UNLIMITED

[redacted]

[redacted]

[redacted]

[redacted] This document contains information affecting the national defense of the United States within the meaning of the Espionage Laws, Title 18, U.S.C., Sections 793 and 794. The transmission or revelation of its contents in any manner to an [redacted] is prohibited by law.

[redacted] of this document in whole or in part is prohibited except with permission of [redacted].

[redacted]

[redacted]

UNCLASSIFIED

CONTENTS

Abstract	ii
Problem Status	ii
Authorization	ii
INTRODUCTION	1
SYSTEM OPERATION	2
SPECIAL REPEATER CONFIGURATION FOR CATHODE-PULSED TRAVELING-WAVE TUBE	3
TRAVELING-WAVE TUBES	3
SIZE AND WEIGHT	5
FIELD TESTS	5
Surface Tests	6
Airborne Tests	10
CONCLUSIONS	12
FUTURE OBJECTIVES	13
ACKNOWLEDGMENTS	13
APPENDIX A - Deception Repeater Gain Requirements	14
APPENDIX B - Circuit Details	20

[redacted]

[redacted]

ABSTRACT
[Secret]

The NL/ALQ-H (XB-1) countermeasures equipment is a deception repeater system intended for use in self-protection of airborne or surface targets against conical-scan automatic tracking radars. It functions by amplifying, introducing false scan modulation on, and reradiating the incident radar signals. In this way, the radar angle error sense is altered, and the antenna will not close on the target.

A preliminary series of surface and airborne field tests against an AN/SPQ-2 radar has indicated that this scan-deception principle is effective against a conventional conical-scan tracking radar. At ranges in excess of 5000 yards it was not possible to acquire the target and obtain automatic tracking when the countermeasure was in operation. If the deception repeater was turned on after initial acquisition of the target, the radar consistently broke track for the surface tests and was subjected to angular tracking errors of three to five degrees for the airborne tests.

An analysis indicates that the magnitude of the angle error which may be introduced in the radar tracking is primarily a function of the gain of the repeater and the cross section of the target. Angle errors of the order of a beamwidth can be expected if the ratio of repeater signal to echo signal is 8.6 db or greater.

PROBLEM STATUS

This is an interim report; work is continuing on this problem.

AUTHORIZATION

NRL Problem R06-10
Project No. NL 460-063
Bureau No. EL-45007

Manuscript submitted August 1, 1956

[redacted]

[redacted]

UNCLASSIFIED

A DECEPTION REPEATER FOR CONICAL-SCAN AUTOMATIC TRACKING RADARS

[redacted]

INTRODUCTION

The conical-scan, or lobing, system of angle tracking is the most prominent system in present-day operational automatic radars. It functions by nutating the main lobe of the radar antenna pattern at a low frequency about the axis along which the radar is "looking," thus tracing out a conical pattern. This nutation frequency is generally on the order of 30 cps. If the target is off the axis of this cone, the echo pulse train will be modulated at this nutation frequency. The crest of this modulation cycle will occur when the antenna pattern is displaced in the same direction on which the target is off the axis of the cone. Angle error sense is derived by phase comparison of this return signal envelope and a reference voltage obtained from the antenna nutator.

The nutational angle tracking system is susceptible to a specific countermeasure technique, which is described in this report. Since angle error sense is derived from the received pulse train envelope phase angle, the introduction of a deception signal which results in 180 degrees phase shift of this envelope will result in the reversal of the antenna servos, and the antenna will be directed away from the target instead of closing on it. A pulse repeater located at the target and modulated in phase opposition to the true error modulation will accomplish this result if the power output is sufficient.

In February 1955, work was initiated at NRL on the NL/ALQ-H (XB-1), which is a deception repeater for operation in the 2.4 to 3.6 kMc region. The original objectives were as follows:

1. Protection for aircraft with radar cross sections of 100 square meters or less. This includes medium-bomber-class aircraft.

2. Automatic multiple signal operation. If illuminated simultaneously by two or more signals, the repeater was to invert the modulation on the strongest signal and apply this to all signals.

3. Unattended operation. No operator was to be required. Only on and off controls were to be provided for normal operation. This feature was considered desirable for installations in fighter-class aircraft, where no operator would be available.

4. Modest size and weight. This feature was to vary with the size of the target, since repeater gain requirements increase with target size. For small aircraft (one to ten square meters cross section), the weight of the system was to be about 50 pounds, and it was to occupy a standard rack. For larger targets (ten to one hundred square meters cross section), an additional 25 pounds and a half rack were considered feasible.

[redacted]

The use of broadband traveling-wave-tube amplifiers for deception repeater applications* provides the very desirable properties of multiple-signal unattended operation, since no tuning is required, and amplification is provided over a broad spectrum. In addition, a minimum of radiation is employed, since the duty cycle of the repeater is small,† and the peak power output is a fixed level above the input signal, as determined by the gain of the traveling-wave-tube amplifiers, thus varying the return signal inversely as the square of the target range. This is in contrast to transponders, which incorporate a keyed oscillator to generate the repeater signal, and hence radiate a fixed power level.

The availability of certain broadband traveling-wave tubes dictated that the first system was to be designed for S-band operation. The basic repeater unit was to be built around a one-kilowatt (maximum output) tube. This unit was to be housed in a standard aircraft-type rack and was to include all the associated circuits for scan inversion and remodulation so that in itself it would be capable of providing protection for a small (10 square meters or less) target. For protection of a larger target, additional gain is required. This was to be provided by inserting a continuous-beam traveling-wave-tube preamplifier ahead of the basic unit. This preamplifier, including all necessary circuits, was to be housed in an aircraft half-rack, and was to be capable of a nominal one-watt output.

SYSTEM OPERATION

Figure 1 is a functional diagram of the basic deception repeater unit. It consists of a one-kilowatt traveling-wave-tube amplifier and associated video and modulation circuits. An incident radar pulse at the receiving antenna is applied to a power divider which delivers approximately 25 percent of the energy to a crystal detector and the remainder to the input of the traveling-wave tube. The detected pulse is then applied to two separate video amplifiers. The limiting video amplifier is provided with sufficient gain so that all signals which are above -15 dbm trigger a multivibrator. This multivibrator then applies a 2-μsec pulse of 20-volt amplitude to the traveling-wave-tube modulator for each incoming pulse. The other video amplifier is followed by a scan demodulator which is a pulse envelope detector, and is provided with automatic gain control. This agc circuit has a 0.1-sec time constant, so the scan modulation on the incoming pulse train is retained at the output. Following the scan demodulator is an inverting and squaring circuit, which generates square waves 180 degrees out of phase with the sine-wave scan modulation appearing on the incoming signal. These square waves are 30 volts peak-to-peak amplitude. They are added to the pulses from the limiting video amplifier at the modulator input. This modulator is biased 30 volts negative (approximately 20 volts beyond cutoff), and will thus conduct only during those pulses which occur on the positive excursions of the square wave. Recalling that the square wave is derived from the inverted scan modulation on the incoming signal, it may be seen that, effectively, the repeater is switched on during the troughs of the scan modulation and off during the peaks. Thus, if the repeater signal is of sufficient amplitude, inverted angle error-sense is "seen" by the radar, and the antenna is driven away from the target.

In order for the deception signal to be effective, it must be of sufficient amplitude to overcome the scan modulation appearing on the echo signal. The amplitude of the deception signal is proportional to the gain of the repeater, while the amplitude of the true echo is

*Stanford University and The Federal Telecommunications Laboratories have devoted work to traveling-wave-tube repeaters. Stanford University has reported effective results using range gate pull-off and angle deception.

†As will be explained later, the repeater duty cycle is roughly one half of that of the radar being countered.

UNCLASSIFIED

proportional to the radar cross section of the target. Therefore, it is seen that, for a particular target size, a certain minimum repeater gain can be specified, and that this gain is proportional to the target size. A simplified analysis presented in Appendix A indicates that the repeater gain must be such that the ratio of deception signal to true echo scattered back toward the radar must be 8.6 db or greater to drive the target out of the major lobe of the radar.

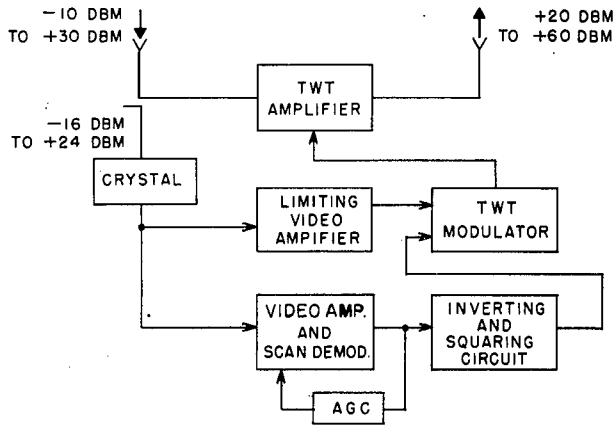

Fig. 1 - Basic deception repeater, block diagram

SPECIAL REPEATER CONFIGURATION FOR CATHODE-PULSED TRAVELING-WAVE TUBE

The operation of traveling-wave amplifiers, is critically dependent on beam voltage. The application of beam voltages other than "synchronous" can result in backward mode oscillations. Thus, under improper voltage adjustments, rf energy may appear at the input terminals of the tube. In addition, with a cathode-pulsed tube, such as the T-230, the cathode voltage must be pulsed to synchronous voltage to obtain the optimum gain characteristic. However, this pulse will have a finite rise time; the tube may pass through backward mode conditions during the leading edge of the pulse, and spurious signals will appear at the input terminals. These spurious signals feed directly to the crystal detector; if they are of appreciable amplitude, they will upset the operation of the scan demodulator. Grid-controlled traveling-wave tubes are not susceptible to this phenomenon, because the beam voltage is not varied. The control grid is used to pulse the beam current.

Because of the feedback difficulty, a different repeater configuration was used for the surface tests. At the time of the difficulty, no grid-controlled traveling-wave amplifier was available, so the special arrangement shown in Fig. 2 was used as a temporary expedient. In this arrangement, the agc video amplifier input is isolated from the high-level traveling-wave-tube input by the back attenuation of the low-level traveling-wave tube (the TWT preamplifier) and the decoupling afforded by the hybrid junction. This arrangement provided stable operation, and the later availability of gridded tubes allowed the return to the original configuration (Figs. 1 and 3) for the airborne tests.

TRAVELING-WAVE TUBES

The low-level traveling-wave tube requirement called for a bandwidth of about 2.4 to 3.6 kMc and a maximum power output of about 1 watt. The tube selected for use is the Hewlett-Packard type 491A-23, which has a low-level gain of greater than 30 db over the band. A typical gain-frequency relationship is shown in Fig. 4.

The high-level traveling-wave tubes are pulsed-beam low-duty-cycle types, capable of a nominal one-kilowatt peak output and a low-level gain of about 30 db over the band. A typical low-level gain-frequency characteristic is given in Fig. 5.

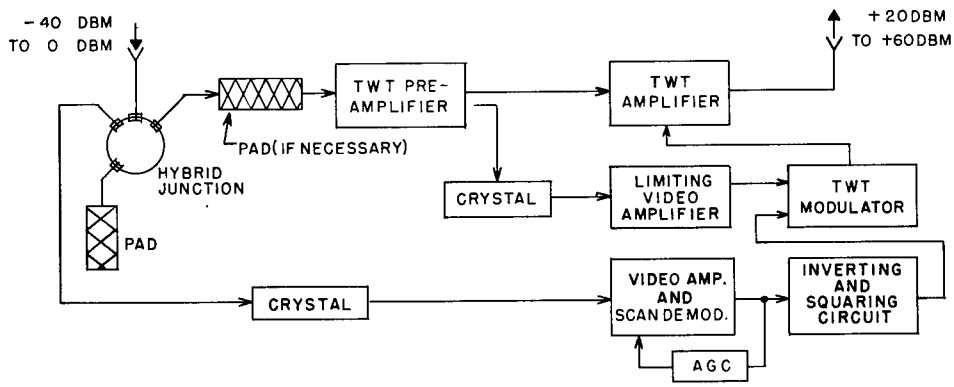

Fig. 2 - Special repeater configuration for cathode-pulsed traveling-wave tube

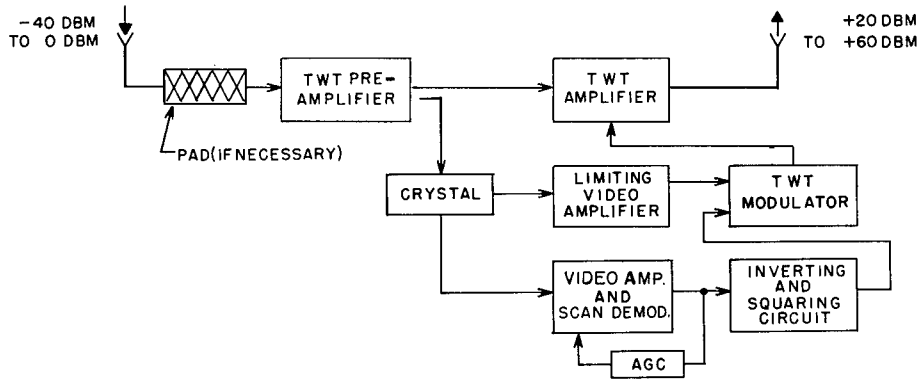

Fig. 3 - Complete deception repeater, block diagram

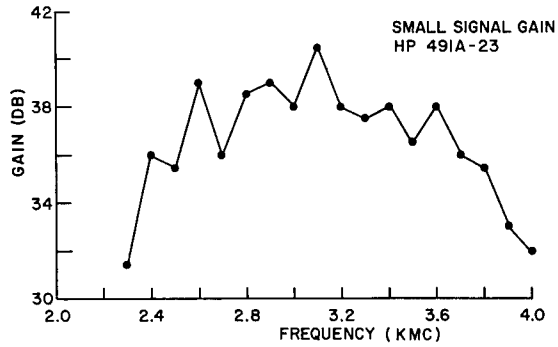

Fig. 4 - Low-level gain characteristic of typical preamplifier traveling-wave tube

[redacted]

UNCLASSIFIED

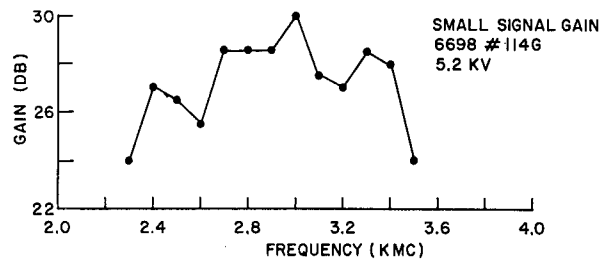

Fig. 5 - Low-level gain characteristic of typical high power traveling-wave tube

A Stanford type T-230 tube, on loan from Stanford University, was used in the original installation. Since this tube did not have a control grid, a 4-250A tube was used for cathode pulsing of the TWT. The original design was for grid-pulsed tubes, and the use of the 4-250A was a temporary expedient until gridded tubes became available. Subsequently, two grid-controlled tubes have been obtained—a Stanford T-231 on loan from Stanford, and a 6698G under contract with Sylvania. The surface tests were performed with the T-230 and the airborne tests with the 6698G. The T-231 has been used for bench tests, and was held in reserve as a possible replacement for the 6698G.

SIZE AND WEIGHT

Some attention has been devoted to minimizing the size and weight of the system. As previously mentioned, the basic deception repeater unit was intended to be housed in a standard aircraft rack and was to weigh about 50 pounds. The original experimental unit weighs 70 pounds, and is housed in a 10 × 10 × 19-inch aircraft rack. A later version of the unit will weigh slightly less than 50 pounds and will be housed in a 10 × 7 × 19-inch aircraft rack. The most significant weight reduction was accomplished by using an aluminum-foil solenoid in place of the original copper-wire solenoid. More efficient packaging resulted in the size reduction.

The preamplifier unit is housed in a 5 × 7 × 19-inch aircraft rack and weighs 27 pounds. Because an aluminum-foil solenoid is used, it is not felt that a significant reduction in size and weight will be realized until periodic-focused tubes become available, eliminating the need for a solenoid.

FIELD TESTS

Two series of field trials of the repeater system were made. The first series, surface tests, was made in August 1955, with the equipment installed in a picket boat. The second series, airborne tests, was made with the equipment installed in the starboard wing tip tank of a Grumman F9F-2 jet fighter aircraft. The airborne tests were made in November and December 1955.

All the field trials were made at the Chesapeake Bay Annex against an AN/SPQ-2* radar. The significant radar characteristics are:

*The AN/SPQ-2 is basically an AN/SP-1 search radar modified for conical-scan automatic tracking in connection with the Lark Missile project.

TRANSMITTER	
Peak power	700 kw
Pulse repetition frequency	576 (variable 350-850) pps
Pulse length	1.0 μsec
Frequency	2840 Mc
RECEIVER	
Bandwidth	2.2 Mc
Range gate	1.0 μsec
ANTENNA	
Gain	2900
Beamwidth	3°
Squint angle	2°
Crossover (two-way)	3 db down
First side lobe (two-way)	21 db down
Nutator scan	24 cps

Surface Tests

The picket boat installation is shown in Fig. 6. The input antenna (Fig. 6a) was a circularly polarized horn of 6 db gain, and the output antenna was a plane vertically polarized horn of 16 db gain. Both antennas were mounted on a 2 by 4 inch upright which could be rotated to direct them toward the radar regardless of the boat heading. The lights mounted below the antennas were intended to aid in obtaining photographic records of the radar antenna angle error, but they proved ineffective. The repeater configuration of Fig. 2 was used. The hybrid junction can be seen in Fig. 6b.

Previous measurements by others have shown that the effective radar cross section of the picket boat is approximately 250 square meters.* While this varies considerably with aspect, there was no conclusive difference in repeater effectiveness with changing aspect.

The boat installation was evaluated for a period of ten days. During this time, a number of trials were conducted using swept-audio modulation; instead of using the demodulated scan signal to remodulate the repeater, an audio generator was substituted and was swept slowly over a range of approximately 20 to 30 cps. The boat trials produced the following general results.

*Withrow, W. E., "Study of Power Requirements for X-Band Jamming from Surface Vessels," NRL Report 4455 (Confidential), December 17, 1954

UNCLASSIFIED

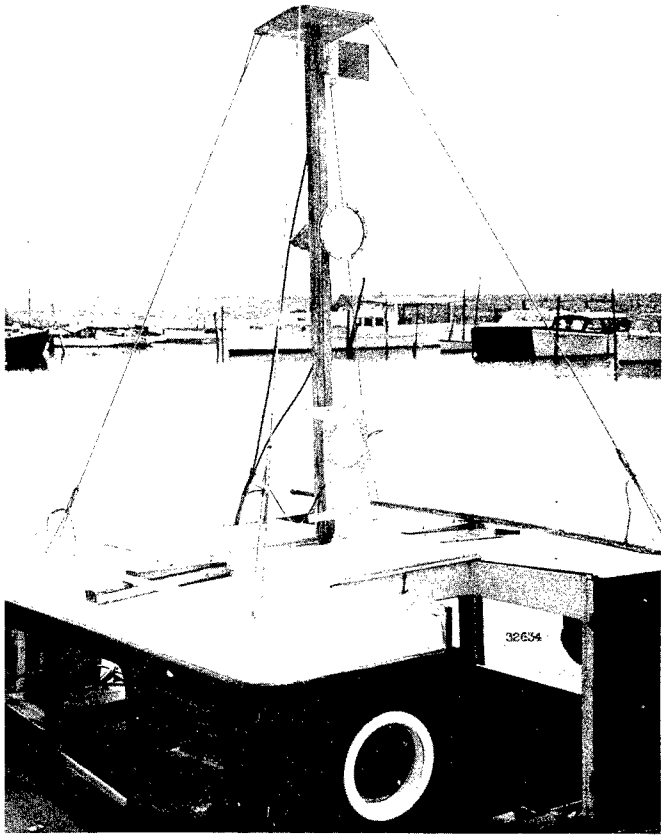

(a) Antennas

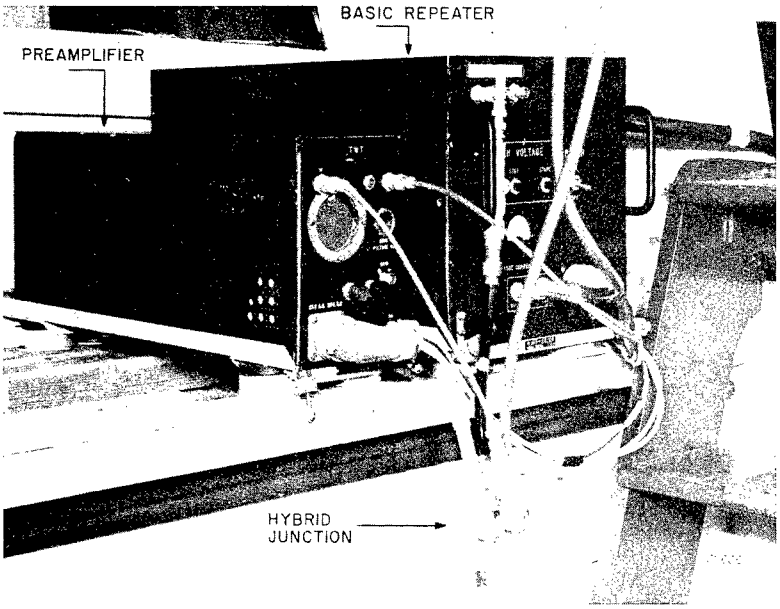

(b) Equipment

Fig. 6 - Picket boat installation

1. At ranges in excess of 5,000 yards, using internal modulation (scan inversion), the radar was caused to break track consistently and quickly. The radar was generally off track about two seconds after the repeater was turned on, and the target could not be reacquired, even with manual aid, until the repeater was disabled.

2. At ranges beyond 5,000 yards, when using swept-audio modulation, the radar was not seriously affected unless the modulation frequency was very near (probably about ±1 cps) the nutation frequency. However, when the modulation frequency was in this range, the repeater was very effective, and the radar antenna was caused to travel in erratic elliptical gyrations about the target. These gyrations were of several degrees amplitude. When the audio frequency was varied at a very slow rate, the radar broke track completely.

3. With either type of modulation, at ranges of less than 5,000 yards the radar did not consistently break track, but the antenna sometimes hunted around the target with an error of three to five degrees. There was a continuous angle error, and the antenna would rarely cross the target, but would trace a more or less elliptical path around it.

Several conclusions can be drawn from these results. First, the gain of this installation was more than ample for this particular target. The repeater signal to true echo ratio was 22 db, assuming 60 db electronic gain and 250 square meters for the target cross section. The adequacy of this gain is evident from the rapidity with which the antenna responded to the repeater signal and was driven away from the target. Angle coordinate and received pulse data from a typical run are given in Figs. 7 and 8. A derivation is given in Appendix A which indicates that a ratio of repeater to echo signal of 8.6 db is sufficient to drive the target out of the major antenna lobe. Excess repeater gain will not result in a larger steady-state angular error, but probably has second order effects resulting from radar angular inertia and response time.

The inability of the repeater to cause a complete breaking of track at short ranges was probably a result of radar antenna sidelobes. At 5,000 yards, the one-way transmitted power into a unity-gain antenna from the AN/SPQ-2 radar is about one milliwatt. If the repeater was illuminated by the first side lobe (which is 21 db down), the signal level at the input terminals was -15 dbm, since a 6-db-gain receiving antenna was used. This level was well above the threshold of the repeater. Therefore, if the antenna was driven away until the target was illuminated by the minor lobe, the repeater would respond and invert the modulation appearing on the minor lobe. Since the error sense of a minor lobe is reversed for a conical-scan system, the effect of the repeater would be to drive the target out of the minor lobe; that is, back toward the major lobe. Therefore, it appears that a sort of quasi-stable condition would develop with the target in the first null of the antenna pattern. In addition, any phase shift (other than 180 degrees) in the repeater modulation would result in an angular error signal component at the radar which was at right angles to the true angle error. This may account for the hunting around the target at close ranges.

In addition to minor-lobe response, there is another effect of short range, and consequent high-input-level, operation. The traveling-wave-tube preamplifier saturates,

UNCLASSIFIED

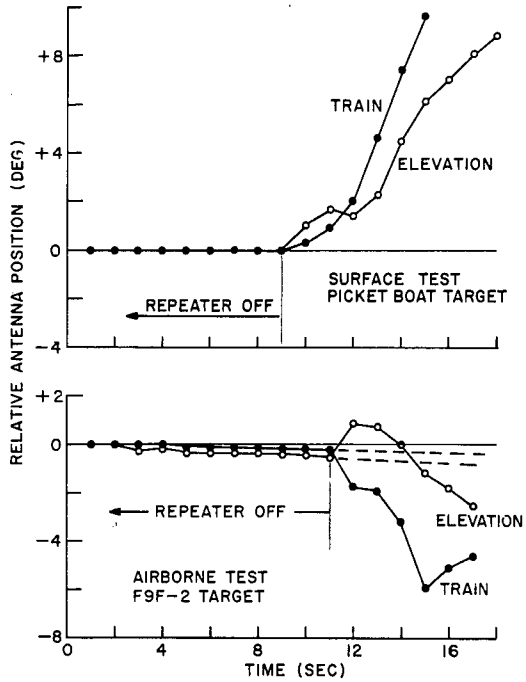

Fig. 7 - Angle coordinate data for typical field tests

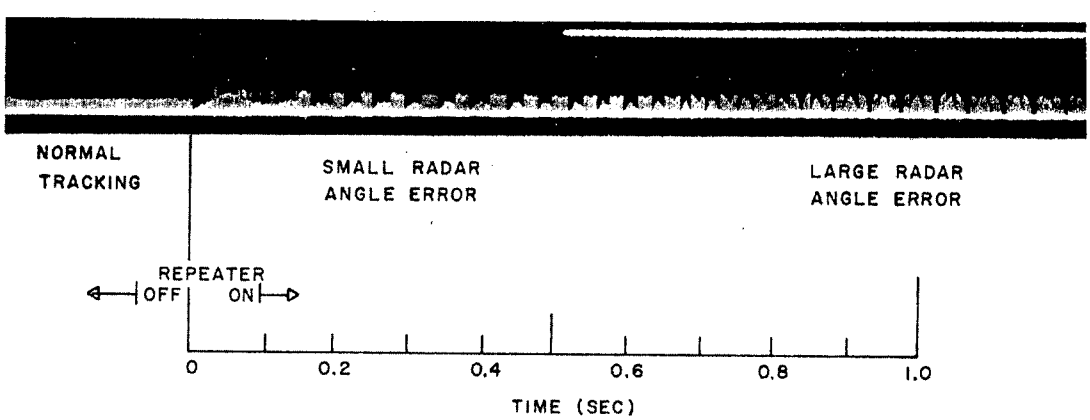

Fig. 8 - Radar detector pulse data for typical field test

with a resultant loss of gain, at an input level of approximately one milliwatt. As explained above, the signal level was about one milliwatt or greater at 5,000 yards. Therefore, some loss of gain was undoubtedly present when the target was illuminated by the major antenna lobe at short ranges.

The swept-audio modulation was very effective when the frequency of the modulation fell within the passband of the radar angle tracking circuits. However, such a modulation system has the inherent disadvantage of any time-sharing system. For example, if it is assumed that a modulation sweep rate of 0.5 cps per second is practical and it is desired to include scan frequencies of 20 to 30 cps, the repeater will be effective 20 percent of the time if the bandwidth of the radar angle circuits is 2 cps; further, there will be comparatively long intervals of uninterrupted tracking.

Airborne Tests

The second series of field tests were made with the deception repeater installed in an F9F-2-type jet fighter aircraft. The tests were again made at the Chesapeake Bay Annex site against the AN/SPQ-2 radar.

As shown in Fig. 9, the equipment was installed in the starboard wing tip tank. This installation was convenient, because the necessary wiring from cockpit to wing had previously been installed in connection with another NRL project. In addition, the tank could be removed for maintenance of the equipment.

The tank was modified to accommodate the equipment at the Naval Aircraft Factory, Philadelphia. Provision was made for the traveling-wave-tube preamplifier, although its use was not considered necessary for a target of this size.

Power was provided by an ac inverter installed in the tank. A remote-control box was installed in the cockpit so the pilot could enable and disable the equipment on signal from the test site.

The original antenna installation shown in Fig. 9b was composed of circularly polarized helical antennas of 6 db gain. A metallic vertical plane was installed inside the radome, midway between the antennas, in an attempt to increase the isolation.

These antennas provided coverage over a beam of 45 degrees about the nose of the aircraft. During the initial flight tests, some difficulty was encountered, and it was suspected that additional antenna isolation was required. For that reason, two plane-polarized horns were substituted for the helical antennas. The input and output horns had gains of 10 and 16 db, respectively. The remainder of the flight tests were made with these horns, even though other possible sources of trouble were discovered and corrected. It was never definitely concluded that the helical antenna installation was inadequate.

Twelve flights were made, each of roughly 1-1/2 hours duration. Runs were made in toward the radar from ranges up to 35,000 yards. The first few flights were marred by a number of minor difficulties, and repeater operation was erratic. Subsequent to correction of these faults, the repeater was reliable and effective. The airborne tests produced the following results.

1. If the repeater was active at the beginning of the run and the radar was not on target, it was not possible to acquire the target.

UNCLASSIFIED

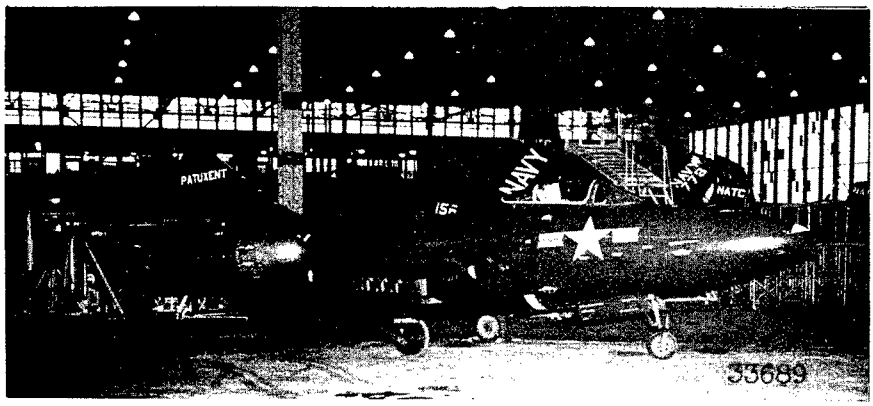

(a) Aircraft with equipment installed

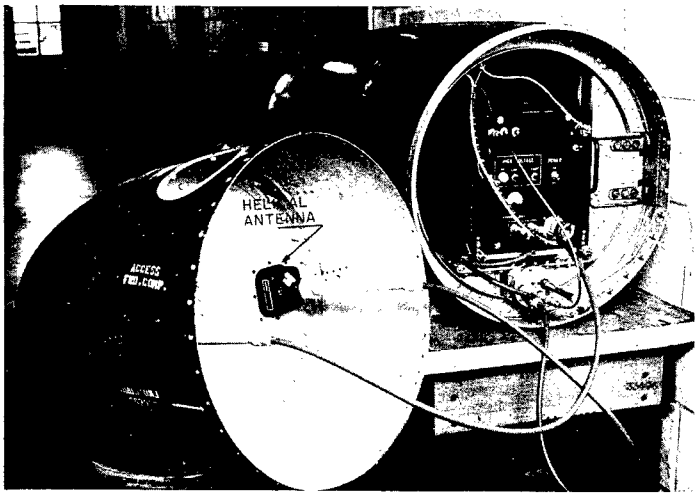

(b) Wing tank with forward access section removed

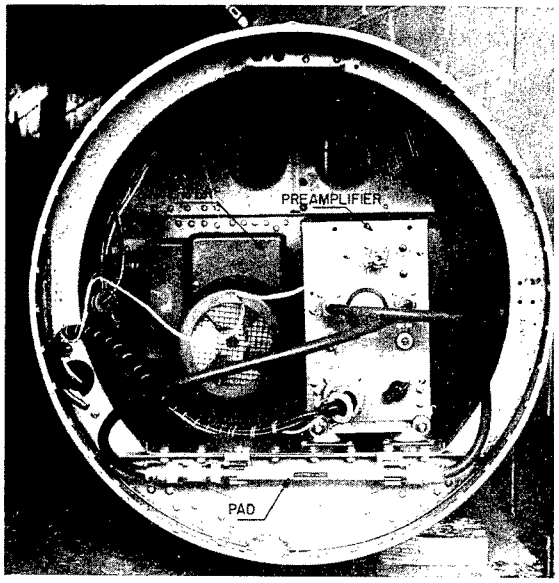

(c) Wing tank with rear access section removed

Fig. 9 - F9F aircraft installation

2. If the repeater was disabled at the beginning of the run so the radar could acquire the target, and was activated after the run commenced, the radar broke track in perhaps one half of the runs. In other instances, the radar antenna would gyrate around the target in much the same manner as in the surface tests at close ranges. If the radar once broke track, it was not possible to reacquire the target unless the repeater was disabled.

3. Complete breaking of track was not as consistent with the airborne target as with the surface target, even at longer ranges. An angular error of three to five degrees was readily introduced, however, and the antenna hunted around the target.

All the flights, except the last one, were made with the traveling-wave-tube preamplifier in the circuit, and with a pad of 16 db inserted in the input (Fig. 3). For the last flight, the pad and preamplifier were removed from the circuit, leaving only the basic repeater (Fig. 1). The results with this arrangement were substantially the same as with the extra gain.

It appears that the only significant difference between the airborne and surface situations was probably the presence of clutter during the surface tests; this may have accounted for having more consistently broken track during those tests.

It is presumed that the effective radar cross section of the F9F is about 5 square meters. On the basis of this figure, the repeater signal to true echo ratio for the airborne tests, using the configuration in Fig. 1 was roughly 18 db.

CONCLUSIONS

The field tests of the NL/ALQ-H (XB-1) have indicated clearly that the scan-deception principle is effective as a countermeasure to conical-scan radar tracking systems. In general, the repeater prevented initial acquisition. If initial acquisition was allowed by temporarily disabling the equipment, angle errors on the order of a beamwidth were readily realized with airborne installation, and loss of track was realized with a surface target. These results certainly render the radar useless for gun-laying applications, or as a source of target angle coordinate data for a terminal-command guidance-type missile system. Unless a complete loss of track is obtained, the range coordinate is not disturbed.

The use of swept-audio modulation alone is of doubtful merit, because of the low effective duty cycle of the repeater, which permits relatively long periods of continuous tracking. In addition, a relatively simple antijam measure, in the form of continuously variable nutation frequency, appears to be feasible.

It was shown that the gain of one traveling-wave-tube amplifier is sufficient to provide head-on protection for a jet fighter. This resulted in a system which weighed 70 pounds, was unattended, and provided broadband coverage (2.4 to 3.6 kMc approximately). It is believed that the weight can be reduced to about 45 pounds by using an aluminum-foil solenoid which is now commercially available.

UNCLASSIFIED

FUTURE OBJECTIVES

To date, no explicit field results have been obtained relating repeater gain to target cross section. At the time of the surface tests, the available traveling-wave tubes were performing in an erratic manner, so it was decided that measured gain performance was unreliable. At the time of the flight tests, the tubes were reliable, but it was not possible to send an operator with the equipment to make in-flight adjustments, and a procedure using ground adjustments only would have been time consuming, laborious, and costly at best. It is anticipated that the repeater will be installed in a P2V-type aircraft in the near future, so that an operator can be carried, in-flight adjustments can be made, and instrumentation can be provided.

Some preliminary work has been initiated on an X-band deception repeater of basically the same type as the one described in this report. The primary improvement needed is faster video response time, since radar pulses of 0.2-μsec width are to be encountered. Repeater response times of this order may demand prohibitively bulky pulse circuitry. A continuous-beam traveling-wave-tube amplifier may be more feasible. This is one approach which will be considered.

ACKNOWLEDGMENTS

The author takes this opportunity to acknowledge the work of other personnel involved in the development and evaluation of the NL/ALQ-H (XB-1). The work was performed under the direction of J. C. Link and the direct supervision of L. A. Cosby. Other contributing personnel were V. Volkel, R. S. Trautvetter, and N. J. Lesko. The assistance of NRL Radar Division personnel in making available and operating the AN/SPQ-2 radar is gratefully acknowledged.

* * *

[redacted]

APPENDIX A
Deception Repeater Gain Requirements

LIST OF SYMBOLS

A_{JR} = Effective area of deception repeater receiving antenna

A_R = Effective area of radar receiving antenna

e = Radar detector output voltage

G_J = Electronic gain of deception repeater

G_{JT} = Gain of deception repeater output antenna

G_R = Gain of radar transmitting antenna

k = P_J'/P

m = Modulation index of power envelope of echo due to scanning and error angle, θ

P_J' = Deception repeater peak power at radar input terminals

P_R = Radar transmitter peak power

P_R' = Effective average peak pulse power of radar while scanning

P_σ' = Target echo peak power at radar input terminals

R = Target range

t = Time

α = A constant relating radar square law detector output voltage to input power

σ = Effective target radar cross section

θ = Radar antenna error angle

ω = Radar nutation angular velocity

DISCUSSION

Since successful operation of a deception repeater-amplifier is dependent on achieving sufficient rf gain, it is useful to derive an expression which indicates the amount of gain required to protect a given size target. A somewhat simplified analysis is made here

[redacted]

UNCLASSIFIED

of the composite modulation "seen" by the radar receiver due to the true echo and repeater signal. By summing the scan frequency components of this waveform, an expression is obtained relating target cross section, repeater gain, and the modulation index due to radar scanning. Then, by equating this modulation index to unity, a value of repeater gain to target cross section is obtained which results in a radar angle error sufficient to drive the target to the first null in the radar antenna pattern.

The analysis here is simplified in the sense that only steady-state conditions are considered. Such factors as radar angle tracking bandwidths are ignored completely. Some parameters are idealized; for instance, it is assumed that the repeater is modulated by a perfect square wave, and that this wave is shifted exactly 180 degrees. In addition, it is assumed that an angle error in the radar produces a true sine wave on the power envelope of the echo, and that the radar detector is a true square law device. For these reasons, the results obtained in this section must be considered approximate.

The familiar expression for two-way propagation of a radar signal is

$$P_{\sigma}' = \frac{P_R G_R A_R}{(4\pi)^2 R^4} \sigma \text{ watts}, \tag{A1}$$

and for a repeater-amplifier at the target, the repeater signal is given by

$$P_J' = \frac{P_R G_R A_R}{(4\pi)^2 R^4} A_{JR} G_J G_{JT} \text{ watts}. \tag{A2}$$

Then the ratio of repeater signal to echo signal is

$$\frac{P_J'}{P_{\sigma}'} = k = \frac{A_{JR} G_J G_{JT}}{\sigma}. \tag{A3}$$

It is significant that Eq. (A3) is independent of range and radar parameters.

If it is assumed that the echo and repeater signals add in power at the radar detector, and that the detector is a square-law device, then

$$e = \alpha \left(P_{\sigma}' + P_J'\right) = \frac{\alpha P_R G_R A_R}{(4\pi)^2 R^4} \left[\sigma + A_{JR} G_J G_{JT}\right]. \tag{A4}$$

If the radar antenna is nutated and there exists an angle error, the echo is modulated in a periodic manner. Assuming that this modulation is of such a waveform that a sinusoid appears at the output of the radar square law detector, Eq. (A1) can be written as

$$P_{\sigma}' = \frac{P_R' G_R A_R \sigma}{(4\pi)^2 R^4} \left(1 + m \sin \omega t\right), \tag{A5}$$

where ω is the nutation angular velocity and P_R' represents the effective radar pulse power while scanning. *

* P_R' will be somewhat less than P_R because the target is off the center of the major lobe. P_R' decreases with increasing error angle θ.

[redacted]

For normal tracking, the radar detector output voltage is

$$e = \alpha \frac{P_R' \; G_R A_R \sigma}{(4\pi)^2 R^4} (1 + m \sin \omega t). \tag{A6}$$

This expression represents normal operation of the idealized conical-scan radar without the deception signal, and gives the envelope of the detected rf pulses. This envelope is a constant term plus a sinusoid. The phase of the sinusoid (compared to the radar reference generator) represents the angle error direction sense, and the amplitude of the sinusoid represents the amplitude of the angle error.

To be effective, the repeater must introduce into the radar a signal, with false modulation, which is of sufficient amplitude to result in erroneous angle error information as interpreted by the radar. For example, let the repeater modulation parameter be represented by $G_J(t)$. Then Eq. (A4) can be rewritten as

$$e = \alpha \frac{P_R' \; G_R A_R}{(4\pi)^2 \; R^4} (1 + m \sin \omega t) \left[\sigma + A_{JR} G_{JT} G_J(t)\right]. \tag{A7}$$

Equation (A7) defines the general case for the detected pulse envelope of a conical scan radar under the influence of the composite of two signals—the back-scattered echo and the modulated repeater amplifier signal. In order to define the effectiveness of the deception signal, it is necessary to select a waveform for the repeater modulation parameter $G_J(t)$.

In order to select an optimum repeater modulation waveform, it is important to note that the radar angle circuits contain bandpass filters which are characterized by bandwidths on the order of one cycle per second, centered on the nutation frequency. Thus, the radar antenna can only respond to those components of the detector output where frequencies are within approximately one cycle per second of the nutation frequency. It appears, then, that a modulation waveform which contributes the largest possible nutation frequency component is the desirable choice. This suggests a square wave whose fundamental frequency is the nutation frequency. The fundamental component of a square wave is greater than a simple sinusoid by a factor of $4/\pi$ if the sinusoid is of the same peak value as the square wave.

If a square wave, shifted 180 degrees from the incoming scan modulation, is used to modulate the repeater, the sequence of events takes place as shown in Fig. A1 . A normal tracking condition with some angle error, represented by the modulation, is shown in Fig. A1a . The error signal after the pulse envelope is detected, which is the signal applied to the phase comparator in the radar, is shown in Fig. A1b . Figure A1c is the modulation applied to the repeater, a pulse train which is square-wave modulated, and Fig. A1d is the detected output of the repeater. The scan modulation appears on this latter signal, since it is simply an amplified portion of the incident signal. The composite signal as seen by the radar second detector is shown in Fig. A1e . Figure A1f shows the envelope of this composite signal after being passed through the narrow-band angle circuit filters. It should be noted that the signal in Fig. A1f is 180 degrees out of phase with the one in Fig. A1b . Thus, the antenna servos are directed away from the target.

The envelope of the pulse train shown in Fig. A1e is the waveform applied to the narrow-band filters and subsequently to the angle error detectors. Since the filters remove

UNCLASSIFIED

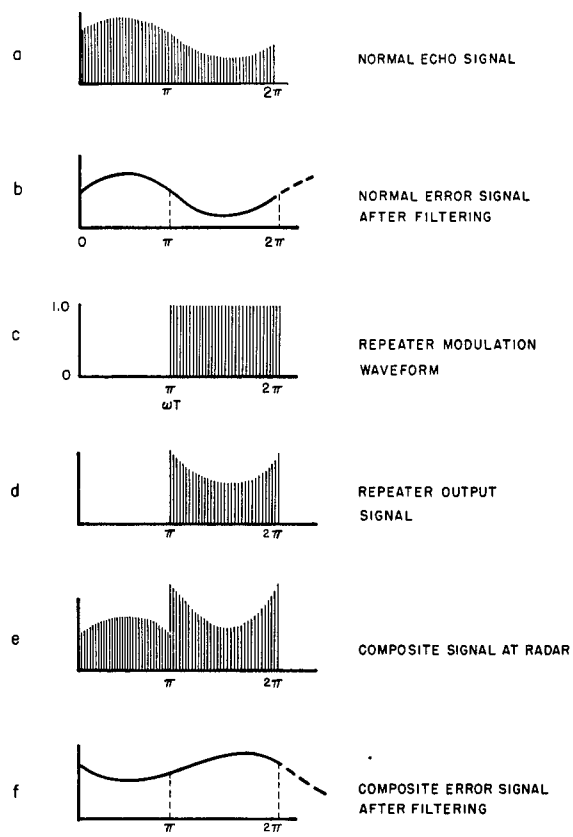

Fig. A1 - Modulation waveforms

all components but the fundamental of this periodic wave, it may be expressed as a function of m (the modulation index due to scanning) and k (the ratio of repeater signal to true echo and the fundamental Fourier series coefficients may be derived in terms of m and k. These are coefficients of the components which pass the filters.

The expression for the envelope of Fig. A1e

$$e = a \frac{P_R' \; G_R A_R \; \sigma}{(4\pi)^2 \; R^4} (1 + m \sin \omega t) \tag{A8}$$

for the interval $0 < \omega t < \pi$ since $G_J(t) = 0$ for this interval. Also,

$$e = a \frac{P_R' G_R A_R \sigma}{(4\pi)^2 \; R^4} (1 + m \sin \omega t) + a \frac{P_R' \; G_R A_R}{(4\pi)^2 R^4} (1 + m \sin \omega t) \; (A_{JR} G_J G_{JT}) \tag{A9}$$

for the interval $\pi < \omega t < 2\pi$, since $G_J(t) = 1$ for this interval.

But,

$$k = \frac{A_{JR} G_J G_{JT}}{\sigma},$$

[redacted]

by definition. Therefore, Eq. (A9) can be rewritten

$$e = \frac{\alpha \sigma P_R' G_R A_R}{(4\pi)^2 R^4} (1 + m \sin \omega t)(1 + k) \tag{A10}$$

for the interval $\pi < \omega t < 2\pi$. The voltage function is then defined by Eqs. (A8) and (A10) for the interval $0 \rightarrow 2\pi$. A Fourier series is defined by

$$y = A_0 + a_1 \cos x + a_2 \cos 2x + \ldots$$
$$+ b_1 \sin x + b_2 \sin 2x + \ldots$$

where

$$A_0 = \frac{1}{2\pi}\int_0^{2\pi} f(x)\, dx$$

$$a_n = \frac{1}{\pi}\int_0^{2\pi} f(x) \cos n x\, dx$$

$$b_n = \frac{1}{\pi}\int_0^{2\pi} f(x) \sin n x\, dx.$$

Since in this case only the fundamental ac terms are needed, it is only necessary to evaluate a_1 and b_1. Thus,

$$a_1 = \frac{\alpha \sigma P_R' G_R A_R}{(4\pi)^2 R^4}\left[\frac{1}{\pi}\int_0^{\pi} (1 + m \sin \omega t) \cos \omega t\, d\omega t + \frac{1}{\pi}\int_{\pi}^{2\pi} (1 + k)(1 + m \sin \omega t) \cos \omega t\, d\omega t\right] \tag{A11}$$

$$a_1 = 0 \tag{A12}$$

$$b_1 = \frac{\alpha \sigma P_R' G_R A_R}{(4\pi)^2 R^4}\left[\frac{1}{\pi}\int_0^{\pi} (1 + m \sin \omega t) \sin \omega t\, d\omega t + \frac{1}{\pi}\int_{\pi}^{2\pi} (1 + k)(1 + m \sin \omega t) \sin \omega t\, d\omega t\right] \tag{A13}$$

$$b_1 \frac{\alpha \sigma P_R' G_R A_R}{(4\pi)^2 R^4} \frac{1}{\pi}\left[2 + \frac{\pi m}{2} + \left(\frac{\pi m}{2} - 2\right)(1 + k)\right]. \tag{A14}$$

Since the a_1 term drops out, equating b_1 to zero and solving for k gives

$$k = \frac{\pi m + 4}{4 - \pi m} - 1. \tag{A15}$$

[redacted]

UNCLASSIFIED

Equation (A15) then defines k for a given value of m. More specifically, since m increases with antenna error angle θ, an increase in θ means that a larger value of k is necessary to overcome the scan modulation; Eq. (A15) gives this k as a function of m.

It is of interest to solve Eq. (A15) for $m = 1$. This is the condition where the repeater has enough gain to drive the radar antenna off target by an amount which places the first radar antenna null on the target.

$$k_{(m=1)} = \frac{\pi\ (1) + 4}{4 - \pi\ (1)} - 1 = 7.3 \text{ or approximately } 8.6 \text{ db}$$

Equation (A15) is plotted for $m = 0$ to $m = 1$ in Fig. A2. If the geometry of the antenna major lobe is known, it is possible to convert error angle θ to corresponding values of m. Then Fig. A1 can be used to find the appropriate values of k.

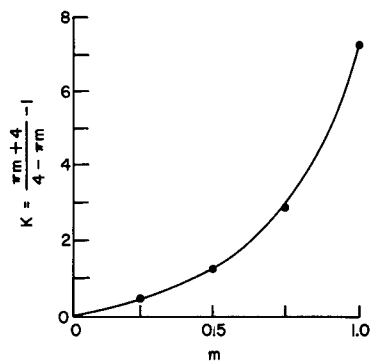

Fig. A2 - Predicted angle error (in terms of m) as a function of repeater signal to echo ratio

As an example of the use of Eq. (A15), suppose it was desired to determine the necessary gain of a deception repeater of this type to drive a conical-scan radar antenna an amount corresponding to a scan modulation index of 1.0 (the target is driven to the first null in the antenna pattern) if the effective radar cross section is 50 square meters. The repeater antennas are to be of unity gain. The radar frequency is 3000 Mc. Then

$$A_{JR} = \frac{G\lambda^2}{4\pi} = \frac{1\ (0.1)^2}{4\pi} = 0.0008 \text{ square meter}$$

$$G_{JT} = 1$$

$$\sigma = 50 \text{ square meters}$$

$$k = 7.3\ (8.6 \text{ db})$$

$$k = \frac{A_{JR} G_J G_{JT}}{\sigma}$$

$$G_J = \frac{k\sigma}{A_{JR} G_{JT}} = 46{,}400 \approx 46 \text{ db.}$$

In this case, the entire 46 db gain would be required in the traveling-wave-tube amplifiers, since unity gain antennas are used. Obviously, it would be possible to substitute antenna gain for all or part of the total required gain.

* * *

[redacted]

APPENDIX B
Circuit Details

In general, the circuits in the NL/ALQ-H equipment are conventional and straightforward, so complete circuit diagrams are given only for the agc video amplifier, the limiting video amplifier, and modulator sections of the system. The remainder of the circuitry is composed of power supplies, bias supplies, and control or overload protection circuits.

The agc video amplifier circuit is given in Fig. B1. The first three tubes, V20, V21, and V22, comprise the video amplifier proper. A multivibrator (V23) provides a switching pulse to the bidirectional switch demodulator. A cathode follower (V24) is used to couple the output of the video amplifier to the demodulator. V25 is a cathode follower and dc amplifier for the demodulator output. The second half of V25 is an agc amplifier, and it is followed by a low-pass filter to remove the scan modulation from the agc voltage. The use of a 6BA6 for a first stage (V20) and divided agc voltage to the second stage (V21) provided more linear agc action. Effective agc action is obtained over an input range of approximately 0.1 millivolt to 1.0 volt, which corresponds to an rf level of -30 dbm to crystal saturation (about 1 watt). The high back-to-front resistance ratio of the 601-c silicon junction diodes in the switch detector provides freedom from variations due to changes in pulse width and repetition rate. The circuit works well at repetition rates as low as 50 per second and at pulse widths of 0.5 μsec or greater.

The limiting video amplifier and modulator circuit is given in Fig. B2. Its purpose is to provide pulses to gate the traveling-wave-tube amplifier grid. These pulses must be constant in amplitude and essentially concurrent with the radar pulses which illuminate the target. In addition, they must be square-wave modulated 180 degrees out of phase with the incoming scan modulation. Fast recovery is desirable, since the repeater may be simultaneously countering two or more signals, and adjacent pulses may occur at short intervals.

The limiting video amplifier consists of two dual triodes, V10 and V11, connected as direct-coupled inverse-feedback pairs, followed by a multivibrator, V12. The feedback pairs provide a voltage gain of about 500, and the sensitivity of the multivibrator is such that an rf pulse of about -15 dbm is required at the crystal. The circuit operates from this input level to crystal saturation, corresponding to an input voltage range of 3 millivolts to about 1 volt. To prevent spurious triggering of the multivibrator, the amplifier-generated overshoot must be kept small. This minimum overshoot requirement is the primary reason for selection of the direct-coupled feedback pair circuit. By using direct coupling between stages and applying negative input pulses, two advantages are realized. First, the positive-going grids are direct coupled, eliminating the possibility of overshoot and subsequent blocking as a result of grid current. In addition, the negative feedback permits the use of bypassed cathodes, with a minimum contribution to overshoots. The limiting amplifier proper including the multivibrator (V12) and cathode follower (V13), exhibits the following characteristics:

Overall response time*	0.20 μsec
Recovery time	10 μsec

*This represents, when operating with a low-level (nonlimiting) signal, the overall delay introduced. With a higher-level signal, the delay is reduced.

UNCLASSIFIED

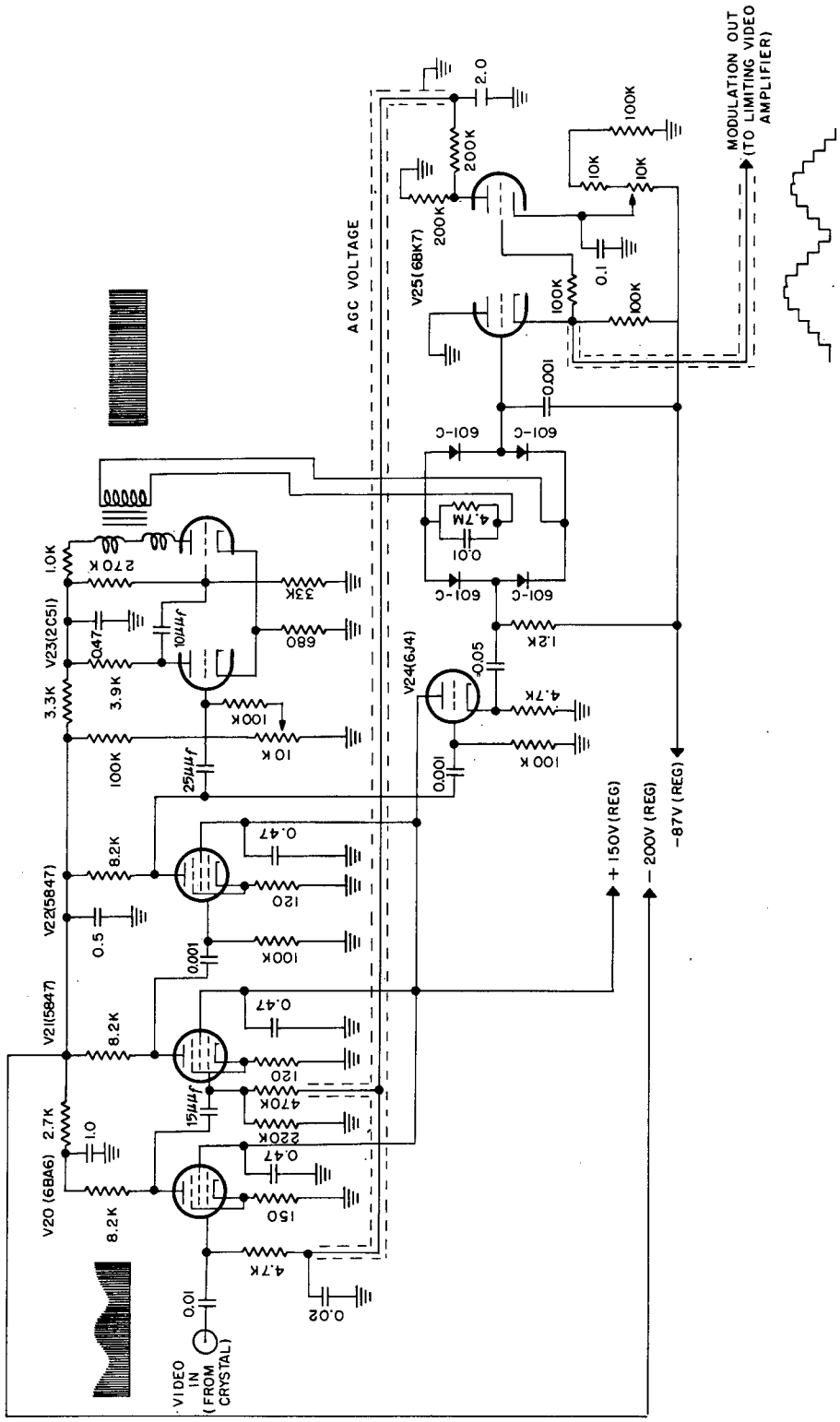

Fig. B1 - AGC video amplifier and scan demodulator circuits

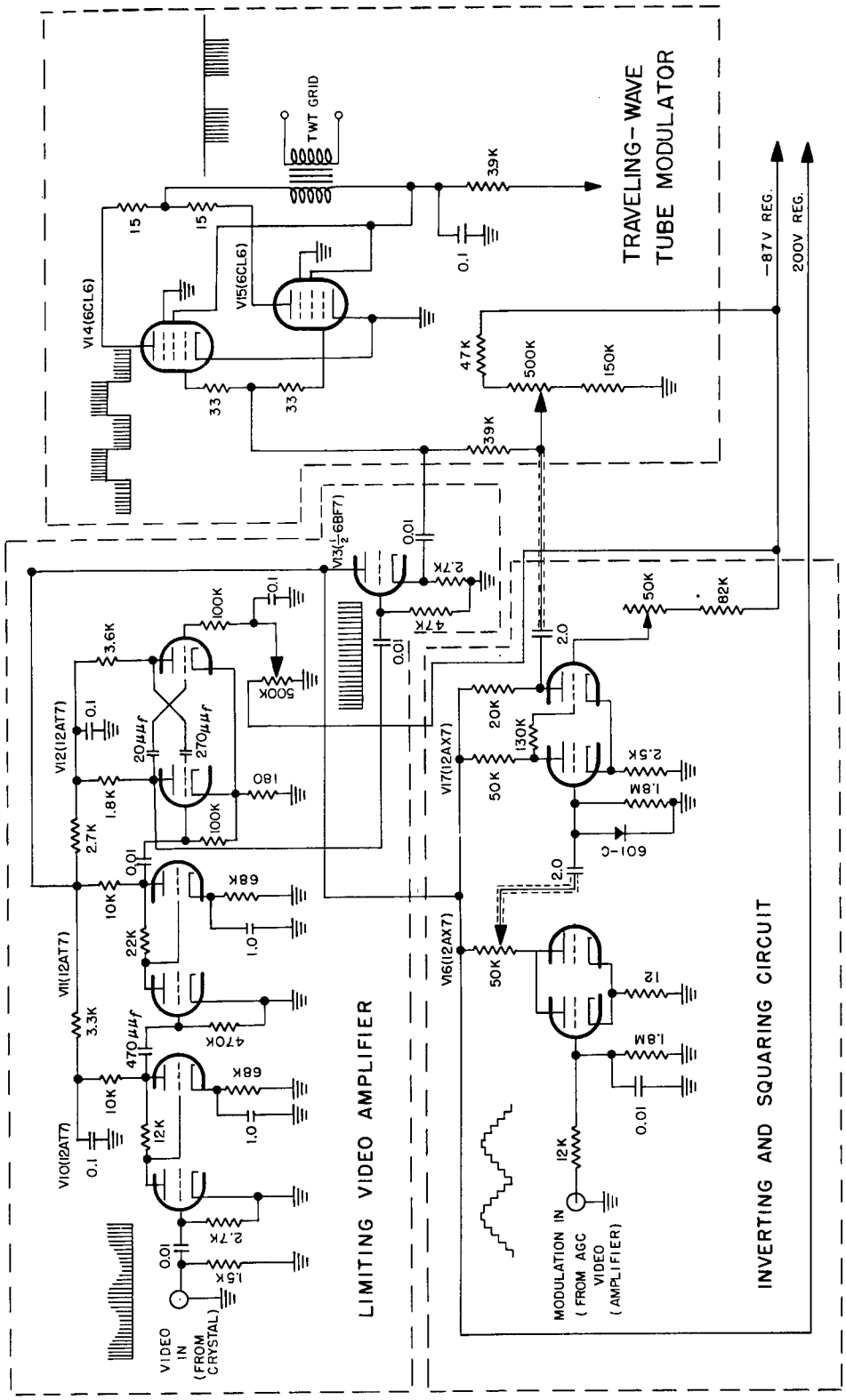

Fig. B2 - Limiting video amplifier and modulation circuits

UNCLASSIFIED

Voltage gain	500
Sensitivity	3 millivolts
Multivibrator output amplitude	20 volts
Multivibrator out pulse length	2.0 μsec

The modulation signal, from the agc video amplifier, is amplified by V16 and squared by V17. This square wave is then added to the pulses from V13, and the sum is applied to the grids of V14 and V15, which are connected in parallel. These modulator tubes are biased beyond cutoff sufficiently to prevent conduction except during those pulses which occur on the positive portions of the modulation square wave from V17. The pulse transformer is necessary for inversion and high-voltage isolation.

* * *

[redacted]

DISTRIBUTION

		Copy No.
CNO		
Attn:	Code Op-03EG	1
	Code Op-371C (2)	2 - 3
	Code Op-341	4
	Code Op-347	5
	Code Op-555C	6
	Code Op-316	7
ONI	Code Op-92-F-2	8
ONR		
Attn:	Code 460 (2)	9 - 10
	Code 427	11
BuShips		
Attn:	Code 840 (10)	12 - 21
BuAer		
Attn:	Code EL-8 (5)	22 - 26
	Code TD-4 (2)	27 - 28
BuOrd		
Attn:	Code RES1 (2)	29 - 30
	Code RES4 (2)	31 - 32
NADC, Johnsville, Pa.		
Attn:	Code EL-95	33
USNEL, San Diego, Calif.		
Attn:	Library	34
USNAMTC, Pt. Mugu, Calif.		35
U. S. Navy Security Group Det., c/o CINCNELM Staff, Navy 100, FPO, New York, N. Y. (4)		36 - 39
U. S. Naval Security Group Det., c/o CINCPACFLEET, FPO, San Francisco, Calif. (2)		40 - 41
OCSigO		
Attn:	Ch. Res. & Dev. Div., SIGEB-C (2)	42 - 43
DSCD, Hq., USAF, Directorate of Research & Development		
Attn:	AFDRD-EL-2 (2)	44 - 45
Air Proving Ground, Eglin AFB, Fla.		
Attn:	Electronics Branch, Operational Test Div.,	46

[redacted]

UNCLASSIFIED

SCEL, Fort Monmouth, N. J.
Attn: Director, Countermeasures Div. 47

Chief of Staff, USAF
Attn: AFOAC-E 48
AFDRD-SC-3 49

WADC, Dayton, Ohio
Attn: Code WCLRC (2) 50 - 51

Hq., SAC, Offutt AFB 52
Attn: Electronics Section DOCET 53

White Sands Signal Corps Agency
Las Cruces, New Mexico
Attn: Chief, Electronics Warfare Div. 54

Hq., 2nd AF, Barksdale AFB, La., 376th Bomber Wing,
Attn: DCTT 55

Rome Air Development Center, Griffiss AFB, Rome, N. Y.
Attn: RCRWE 56

Hq., Holloman Air Development Center
Air Research & Development Command, Holloman AFB, New Mexico 57

Army Electronics Proving Grounds, Electronic Warfare Dept.,
Ft. Huachuca, Arizona 58

Signal Corps Electronics Research Unit,
P. O. Box 205, Mountain View, Calif. 59

* * *

[redacted]

NAVY DPPO PRNC WASH D C

[redacted]

UNCLASSIFIED

DETACHABLE ABSTRACT CARDS

The abstract cards detached from this document are located as follows:

1. . . . . 2. . . . . .

3. . . . . 4. . . . . .

Signed: . . . . . Date: . . . . . .

[redacted]