UNCLASSIFIED

NRL Report 6356

A New Approach to Lubricating Ball Bearings

V. G. FitzSimmons, C. M. Murphy, J. B. Romans, and C. R. Singleterry

Surface Chemistry Branch
Chemistry Division

December 28, 1965

U.S. NAVAL RESEARCH LABORATORY
Washington, D.C.

CONTENTS

Abstract 1
Problem Status 1
Authorization 1

INTRODUCTION 1

ANALYSIS OF THE SYNCHRO BALL BEARING PROBLEM 2

Examination of Synchro Bearings 2

STUDIES OF THE PRESENT LUBRICATION OF SYNCHRO BEARINGS 4

Discussion of Present Lubrication Practices 4
Low-Temperature Torque Requirements 5
The Formation of Silicone Gels During Boundary Lubrication 6

SURFACE CHEMICAL APPROACH TO LUBRICANT RETENTION 9

TESTS OF FLUOROCHEMICAL BARRIER FILMS IN SYNCHRO BALL BEARINGS 11

Preliminary Tests on Bearings 11
Preparation and Lubrication of Synchros 11
Preliminary Synchro Friction Torque Studies from −55 to 135°C 12
Synchro Performance 14
Barrier Film Performance with a Silicone Oil 17

TESTS OF BARRIER FILMS ON SERVO MOTOR BEARINGS 17

SUMMARY AND CONCLUSIONS 18

RECOMMENDATIONS 19

ACKNOWLEDGMENTS 20

REFERENCES 20

APPENDIX A — Purification of Hexafluoroxylene 22

APPENDIX B — Purification of FX 706 23

A New Approach to Lubricating Ball Bearings

V. G. FitzSimmons, C. M. Murphy, J. B. Romans, and C. R. Singleterry

Surface Chemistry Branch
Chemistry Division

At the request of the Bureau of Naval Weapons, the Naval Research Laboratory undertook a study of the causes of unsatisfactory service and storage life of Navy synchros and servo motors. Silicone oils have been in wide use as the lubricant for the ball bearings of these devices because of the good low-temperature characteristics of these materials. Examination of bearings from synchros which failed qualification tests at the U.S. Naval Ammunition Depot, Crane, Indiana, gave evidence of fretting corrosion, broken bearing retainers, dry residues, and loss of lubricant. A white flocculent substance was found in new silicone-lubricated bearings. This substance could be reproduced in the laboratory at room temperature when rubbing ferrous metals were lubricated with silicones.

The principal cause of early synchro and servo motor bearing failure is believed to be the creeping away of the small supply of silicone lubricant from the load-carrying area of the bearings under service and storage conditions. Because of their low surface tensions and range of molecular size, silicones creep excessively over most solid surfaces. Depletion of the available lubricant soon leads to boundary lubrication in the bearing, and difficulties soon develop because silicones are known to be poor boundary lubricants for steel on steel. Studies proved that a lubricant based on bis(2-ethylhexyl)azelate satisfactorily lubricated synchro bearings at temperatures as low as −55°C. Creeping of lubricants composed either of the azelate ester or of silicones from ball bearings has been prevented by the use of low-energy fluorochemical barrier films.

The life of synchros containing bearings treated with the barrier film and lubricated with a bis(2-ethylhexyl)azelate composition has increased from 300 hours to nearly 4000 hours on standard qualification tests performed at NAD, Crane. Similar units lubricated with silicone oil have operated 2500 hours. Preliminary tests indicated that the barrier film made possible the operation of servo motors for 5000 hours at room temperature with either silicone or ester-type lubricants, an increase in life expectancy of 5 to 10 times. The ability of the barrier film to increase the storage life of synchros and servo motors is being bench tested intensively by NAD, Crane. One of the authors has visited a number of manufacturers of rotating components and ball bearings to assist in initiating the use of the fluoropolymer barrier films and the diester lubricants. For one critical classified Navy requirement an immediate and mandatory procurement of barrier-coated bearings has been authorized.

The increased performance requirements of new specifications for synchros and servos is based on their life expectancy using a barrier film on the bearings. These specifications, however, will contain no mandatory requirements for a barrier film, nor will they specify a particular product. The use of the barrier film to increase the life expectancy of other Navy equipment containing miniature ball bearings is anticipated. It is predicted that other new materials will become available for use as barrier films and lubricants so that there will be more than one source and supplier.

INTRODUCTION

Since World War II there has been a continuing trend in the design of military equipment toward smaller and lighter components, wider ranges in operating temperatures, and higher rotational speeds. Because of the nature of these devices, they are often stored for long times, and many are expected to give long reliable service in the field. Certain types of precision military equipment such as synchros, servo motors, and gyroscopes usually have their rotating components mounted on miniature ball bearings. These bearings are lubricated only at the time of assembly of the devices, for it is usually physically impossible to relubricate them periodically. In certain types of gyroscopic instruments, relubrication is undesirable because of the danger that the lubricant may creep onto adjacent delicately balanced parts. During storage or long periods of service, lubricants in equipment bearings can be depleted through chemical decomposition or evaporation and by spreading or creeping onto adjacent surfaces. Instrument bearing lubricants developed

NRL Problem C02-04, BuWeps Task RRMA 03 021/652-1/R001-07-01 and NRL Problem C02-19, BuWeps Task RREN 04 375/652-1/F008-01-05. This is an interim report; work on this problem is continuing. Manuscript submitted September 21, 1965.

since World War II have excellent chemical stability and low volatility, but until recently there has been no satisfactory method of controlling the spreading or creeping of such oils.

Recent reports from Navy field activities, qualifying laboratories, and military equipment manufacturers have indicated that certain types of equipment become inoperative after relatively short periods of storage. The expected life performance of these devices in the field is not being reliably achieved. It has been necessary to waive minimum endurance requirements for new Navy synchros in order to make procurements for the fleet. This critical situation prompted Codes RREN and RRMA of the Bureau of Naval Weapons to request the Naval Research Laboratory to determine the cause of the poor storage and service performance of Navy synchros, servo motors, and gyroscopes (1,2). It has become evident that in general, the miniature ball bearings used in these devices are not at fault *per se,* but that the degree of bearing cleanliness, choice of lubricant, and especially the inability of the lubricant to remain in the bearings are the principal causes of the poor performance.

This report summarizes our research on this problem and makes suggestions on how to improve the reliability of miniature ball bearings in synchros and servo motors in general.

ANALYSIS OF THE SYNCHRO BALL BEARING PROBLEM

Synchros are electromechanical devices similar in appearance to small electric motors and are used primarily for transmission, reception, and conversion of angular data. They find wide naval application in computers, fire control systems, missiles, guidance controls, and navigational systems. Since synchros are precision devices, their rotors are mounted on low-friction miniature ball bearings which are of the radial thrust type. All such bearing components used by the Navy are made of corrosion-resistant steel (3). The bearings are lubricated only at the time of assembly of the synchros. Although the type of lubricant is not specified, its low-temperature properties are indirectly governed by the low-temperature torque requirements outlined in the Navy specification (3). Electrical contact with the synchro electrical windings is made by gold alloy wire brushes which operate against slip rings on the rotor shaft. The brushes are not lubricated.

Reports from the Navy synchro qualifying facility, Code QECS, at the U.S. Naval Ammunition Depot, Crane, Indiana (NAD, Crane), indicated that no manufacturer has been able to produce synchros which could be relied on to pass the 1200-hour endurance test required under Military Specification Mil-S-0020708B(WEP) (3). In order to procure synchros needed in the fleet, it has often become necessary to waive the 1200-hour endurance requirement and to accept units which are capable of operating continuously for as little as 300 hours. It was also found that the performance of synchros removed from storage was unsatisfactory and that they would no longer pass the requirements of the specification under which they were purchased.

Examination of Synchro Bearings

A number of synchros which had failed the 1200-hour endurance test at NAD, Crane, were examined by us. In nearly every case the rotors either were very rough in operation, could be turned only with difficulty, or had seized.

Several of the synchros were disassembled and the bearings removed for microscopic examination. Bearings that had seized were found to contain much dry, brown, amorphous-appearing debris. A typical bearing in this condition is shown in the photomicrograph in Fig. 1. In those bearings that contained crimped two-piece ribbon-type retainers, the crimping tabs were often found to have been loosened by fretting corrosion beneath the tabs. Bearings on rotors that could be turned with difficulty were found to be in intermediate stages of deterioration; the balls and raceways were covered with a brown film, and the bearing seemed to be devoid of lubricant.

Several new synchros were removed from stock at NAD, Crane, and examined. None of the rotors were completely locked, but some tended to stick when turned in one direction or the other. All exhibited a rough "feel" when turned by hand, particularly if a slight axial force was applied to the rotor shaft. The bearings from these synchros were equipped with metal shields. Examinations of the shields after removal indicated that the ball retainers had been rubbing against them in some instances. Microscopic examination of

UNCLASSIFIED

Fig. 1 — Photomicrograph of a typical synchro silicone-lubricated ball bearing which failed after 300 hours of operation

the bearings revealed the presence of particulate matter of sufficient size to cause difficulty. In addition to the particulate matter, the bearings also contained a white, flocculent-appearing material. A similar material was also observed in a number of silicone-lubricated Navy servo motor-tachometer generator bearings taken from units that had been in storage. A typical example is shown in Fig. 2, where the white deposit is on the inner edge of the outer race.

Examination of the synchro bearings indicates that it is unlikely that faulty bearings, per se, are the major cause of unreliability of Navy synchros. Since when in use the rotors of these devices must turn at slow speeds, sometimes with an oscillatory motion, the bearings often operate under conditions of boundary lubrication. Under such conditions, fretting corrosion may occur as well as increased friction, wear, and oil degradation. The residues found in the failed synchro bearings appeared to consist primarily of deteriorated lubricant and iron oxide produced by wear and fretting corrosion. Such conditions are observed frequently in ball bearings that have failed, particularly those in which the lubricant has become depleted (1,4).

Certain conditions observed in the new synchro bearings may contribute to early bearing failure. The metal shields used had been pressed into the bearing outer rings at the time of bearing assembly. This procedure can introduce metal particles into a bearing. Particles could also have been generated in those bearings where the ball retainers were rubbing the bearing shields. Crimped two-piece ball retainers are known to entrap particles during manufacture which may work out during operation of the bearings. Experiments have proved that there is little probability that any cleaning technique can remove all foreign matter from a bearing equipped with shields. If a bearing is sparsely lubricated, the presence of foreign particles presents a serious problem. Under these conditions, a particle in the ball path tends to become more strongly adherent and is less likely to be washed aside than when a more plentiful supply of lubricant is available.

It is unlikely that the white substance observed in the new synchro and servo motor bearings was

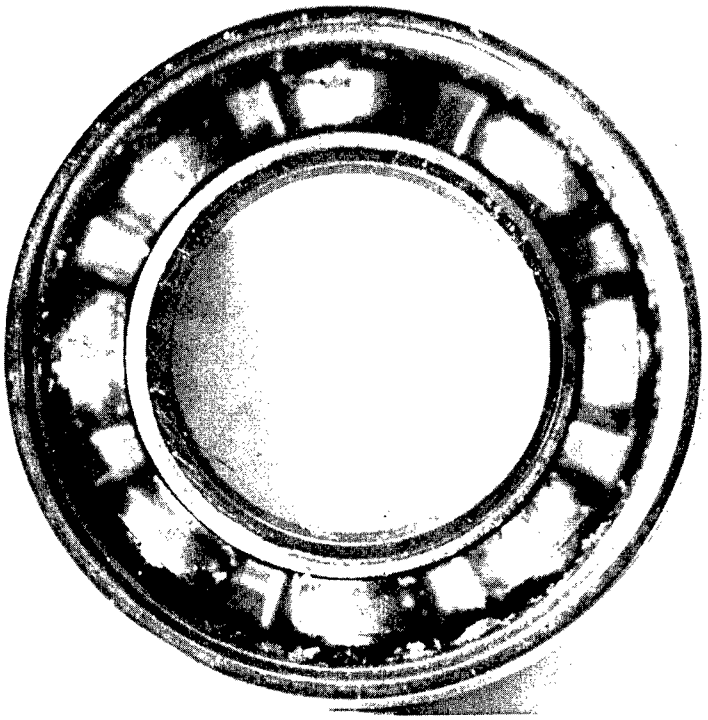

Fig. 2 — Photograph showing white substance found in new Navy servo motor tachometer-generator bearings

present when the bearings were assembled. A white material similar in appearance has been found in potentiometer bearings believed to have been lubricated with the silicones (4). This substance evidently arose from the lubricant. It is believed to be silicone gel.

STUDIES OF THE PRESENT LUBRICATION OF SYNCHRO BEARINGS

Discussion of Present Lubrication Practices

The synchro manufacturers appear to have turned to the silicones as lubricants for ball bearings in order to meet specification (3) requirements for friction torque at low temperatures. In order to minimize the amount of oil that may creep onto critical nonlubricated electrical contact areas, it has been customary for the manufacturers to limit the quantity of lubricant in each bearing to a few milligrams. Such a small amount of lubricant promotes the occurrence of boundary rather than hydrodynamic conditions of lubrication, particularly under the slow-speed operating conditions frequently encountered by synchros. Although the conventional silicones are reported to be adequate lubricants for steel on steel in rolling contact (5a,8), it is well known that they are unsatisfactory boundary lubricants for sliding ferrous metals in that they produce high friction and promote wear (5-8). And it is known that the nature of contact between balls and races of ball bearings is not entirely that of pure rolling but that slippage occurs (9,10); furthermore, contact between balls and ball retainers is also of a sliding nature. Thus it is in these nonrolling areas that deterioration leading to early failure of the synchro bearings is believed to originate.

Because of the inadequacy of the silicones in providing good boundary lubrication, new halogen-containing silicones have been developed (5b,11,12). These materials offer improvements over the conventional silicones but are considered inferior to petroleum lubricants for ferrous metals at normal operating temperatures under high loads and sliding contact (5b).

UNCLASSIFIED

Further attempts to improve the boundary lubricating qualities of the silicones resulted in the development of the fluoropropyl-substituted silicones (5b). These materials are reported to have better lubricating properties than the chlorinated silicones, but their viscosities are prohibitively high at −65°F (5b,13). Other attempts to improve the lubricating and physical properties of the silicones have been made through the use of additives and by copolymerization (5b). The effectiveness of these materials as ball bearing lubricants does not appear to have been generally established (5c).

In addition to the problems which have arisen because the synchro bearings are sparsely lubricated, the choice of the silicones was particularly unfortunate in that these materials have surface tensions and compositions that promote rapid spreading over surfaces and tend to cause sealing problems (5d,14,15). The limitation of the amount of lubricant in the bearings not only does not prevent spreading but serves to shorten the time required for depletion of the lubricant. After sufficient depletion, only boundary lubrication can exist. The increase in bearing friction during operation under these conditions may cause a significant rise in bearing temperature. If this temperature is above that of adjacent components, the resulting surface tension gradient in the oil film further accelerates the movement of the oil film away from the bearing. When the lubricant is thus depleted, fretting corrosion and wear becomes very pronounced, with the end result as observed in the failed synchro bearings. Because of the tendency of the silicones to spread excessively, silicone-lubricated bearings would become practically devoid of lubricant in a relatively short storage time, which would account for the unsatisfactory performance of synchros removed from storage and placed on test at NAD, Crane.

Low-Temperature Torque Requirements

The military specification (3) covering Navy synchros does not stipulate the composition or nature of the lubricant used in the synchro bearings. It requires only that the lubricant be adequate to provide the synchro performance specified at indicated temperatures, speeds, and environmental conditions.

The synthetic-based aircraft instrument oil obtainable under Military Specification Mil-L-6085A (16) was developed for use in such devices as the Navy synchros. However, the synchro manufacturers are of the opinion that the low-temperature torque requirements cannot be met when this lubricant is used in the synchro bearing. The maximum viscosity permitted at −65°F (−53.9°C) under specification Mil-L-6085A is 12,000 centistokes. The viscosity at −65°F of a typical chlorinated silicone recommended for use in ball bearings is 2500 centistokes (12). Thus there is almost a fivefold difference between the −65°F viscosity of an allegedly unsatisfactory ester-type lubricant and that of silicones used in this application.

Since the diester-type instrument oil had been acceptable for many other low-temperature applications, it seemed worthwhile to determine the actual limiting viscosity at −65°F which would cause a synchro to fail the low-temperature torque test. This information was needed to serve as a guide in the selection of candidate synchro lubricants.

According to the present specification (3), the friction torque of the synchros is measured at −55°C and at 125°C by rigidly mounting an eccentrically weighted dial onto the rotor shaft and rotating the synchro housing at 4 to 6 rpm with the shaft horizontal (3). The synchro is considered to have failed the test if the dial makes one complete revolution while the housing is turned three revolutions in each direction (3). The maximum torque permitted by this test ranges from 0.02 to 0.50 oz-in., depending on the size of the synchro involved (3). The torque indicated by the eccentrically weighted dial is a go/no-go measure of the resistance of the synchro shaft to rotation under the conditions outlined. This resistance is due to friction within the bearings and between the brushes and slip rings as well as to forces which may arise because of residual magnetic effects between the synchro rotor and stator. Bearing friction at low temperatures is appreciably greater than at room temperature because of the high viscosity of the cold bearing lubricant.

In order to reduce the number of variables requiring control, a simple test device was developed to permit the measurement of the torque required to rotate two synchro bearings in the

absence of brush and slip-ring assemblies and without interference from any residual magnetic effects between a rotor and stator. Two bearings of the size normally used in size 11 synchros were installed in a hollow stainless steel cylinder about 2 inches apart, and the inner rings were mounted on a common stainless steel shaft. In making a determination, the eccentrically weighted dial specified in Mil-S-0020708B(WEP) (3) was attached to the shaft and the hollow cylinder was rotated in the same manner as a synchro on test. To make certain that the lubricant in the bearings was well distributed, the device was operated at room temperature before being placed in a chamber maintained at −65°F.

Torque measurements were made on a number of silicone and diester type lubricating fluids ranging in viscosities at −65°F from approximately 1000 centistokes to over 42,000 centistokes. Two lubricants thickened with lithium stearate and a diester-type instrument grease, formerly designated as specification Mil-G-15793, were also evaluated in the torque test apparatus.

The two typical silicones chosen were designated as Silicone A, a lightly phenylated methyl type and Silicone B, a methyl chlorophenyl type. They had 77°F viscosities of approximately 50 and 70 centistokes, respectively. The diesters used were bis(2-ethylhexyl)azelate and bis(2,2-dimethyl octyl)azelate. The 77°F viscosities of these materials were about 18 and 35 centistokes, respectively. The silicones and the bis(2-ethylhexyl)azelate were obtained from commercial sources. The bis(2,2-dimethyl octyl)azelate was a research sample supplied by Eastman Chemical Products, Inc., Kingsport, Tennessee. Barium dinonylnaphthalene sulfonate was added to the bis(2-ethylhexyl)azelate (1 to 2%) as a rust inhibitor and 0.5% of either phenothiazine or phenyl-α-naphthylamine was added to both esters as an oxidation inhibitor. A synthetic-base aircraft turbine engine oil (17) was also studied. Details of the blend compositions, low-temperature viscosities, and the torque measurements obtained with these lubricants are given in Table 1.

It was surprising to observe that none of the lubricants, including the instrument grease, gave torque readings above the limit of 0.05 oz-in. designated for the size 11 synchro in the specification (3). These results indicate that the limiting viscosity lies well above 42,000 centistokes for freely operating synchro bearings. It was of interest to note that when the test device was operated at room temperature with either of the two silicones in the bearings, the eccentrically weighted disk tended to oscillate as though momentary slight seizure or sticking of the bearings was occurring. This phenomenon was not observed when a diester was used, nor was it observed with any of the lubricants at low temperatures where increased viscosity of the lubricant would tend to damp out oscillations. The weighted disk is a very sensitive torque-indicating device, and it is suggested that these oscillations are a reflection of the poor boundary-lubricating characteristics of the silicones in the presence of ferrous metals.

The limiting viscosity of over 42,000 centistokes is much greater than the −65°F viscosity of the Mil-L-6085A ester-type lubricant considered to be too viscous as a synchro lubricant by the synchro manufacturers. It is obvious that other torque-producing factors are involved in an assembled synchro that do not exist in the test apparatus. It was therefore necessary to determine the maximum lubricant viscosity which could be tolerated in an assembled synchro. This study appears later in this report as part of the section "Preliminary Synchro Friction Torque Studies from −55 to 135°C."

The Formation of Silicone Gels During Boundary Lubrication

The observation of a gelatinous white substance in the new synchro bearings at NAD, Crane, led to speculation concerning its origin. If this material was not in the silicone at the time the bearings were lubricated it must have entered the bearings after they were lubricated or have been formed in the bearings after lubrication.

It is well known that silicones form gel at elevated temperatures and that "gel time" under specified conditions is a property frequently quoted by manufacturers of silicones (5e,12). However, it is unlikely that the bearings of the new synchros had been subjected to prolonged exposure to high temperatures. On the other hand, it has been known for some time that sliding or rubbing metals may generate relatively high temperatures at points of contact even though the bulk of the system is at room temperature (18). In the process freshly abraded metal

TABLE 1
Low-Temperature Torque Measurements

Lubricant	Viscosity at −65°F (−53.9°C) (centistokes)	Torque at −65°F (oz-in.)
Silicone A	1020	<0.05
Silicone B	3040	<0.05
Silicone-azelate blend: Silicone A, 50%; bis(2-ethylhexyl)azelate, 50%	3730	<0.05
Bis(2-ethylhexyl)azelate (NRL miniature ball bearing oil MB 10)	8780	<0.05
Aircraft turbine engine oil	13,000 max (17)	<0.05
Azelate blend I: Bis(2-ethylhexyl)azelate, 65%; bis(2,2-dimethyloctyl)azelate, 35% (NRL miniature ball bearing oil MB 20)	14,500	<0.05
Azelate blend II: Bis(2-ethylhexyl)azelate, 30%; bis(2,2-dimethyloctyl)azelate, 70%	25,200	<0.05
Bis(2,2-dimethyloctyl)azelate	42,100	<0.05
Soap-thickened silicone-azelate blend: Silicone A, 47%; bis(2-ethylhexyl)azelate, 47%; lithium stearate, 6%	–	<0.05
Soap-thickened azelate ester: Bis(2-ethylhexyl)azelate, 93%; lithium stearate, 7%	–	<0.05
Diester instrument grease (formerly specification Mil-G-15793)	–	<0.05

surfaces may be exposed. It is possible that localized "hot spots" in combination with a catalytic effect produced by the freshly exposed surfaces may be capable of producing silicone gel in a silicone-lubricated bearing under very mild conditions.

To explore the possibility that the gel was friction produced, a modified Bowden-Leben "stick-slip" machine was used to provide a reciprocating sliding motion between two specimens in the presence of a silicone fluid. The apparatus was similar to that described by Goodzeit, Hunnicutt, and Roach (19). The moving specimen was a 1/4-in.-thick flat plate which rubbed against a 1/2-in.-diameter ball attached to the friction arm of the Bowden-Leben machine. The ball specimens were of ball bearing quality stainless steel having a surface roughness of about 5 μin., rms. The surface hardness of the balls used ranged from about 36 to 60 Rockwell C. The plate specimens were of 440-C stainless steel finish ground to a surface roughness of 10 μin., rms, or less. The surface hardness of the plates ranged from about 25 to 57 Rockwell C.

The investigation was conducted by placing 8 mg of silicone on the plate specimen and confining it so that it formed a pool of liquid. The ball was forced against the plate under a load of 1 kg (approximately 80,000 psi). The plate was moved relative to the ball at the rate of 0.1 cm per second. The wear track thus generated in the plate was approximately 2.5 cm long. No heat was applied to the specimens.

It was found that only 35 traverses of the plate was sufficient to generate visible quantities of a white gelatinous appearing material (presumably silicone gel) in a pool of Silicone A. If chlorinated Silicone B was used, about 350 traverses were required. If the machine was allowed to operate for some 3000 traverses, relatively large quantities of gel could be suspended in the silicone. The gel formed in Silicone B, shown in

Fig. 3 — Photomicrograph of gel formed in silicone B after 3500 traverses in the Bowden-Leben machine as a demonstration of the source of the white substance in Fig. 2

the photomicrograph in Fig. 3, is typical of that obtained by using any combination of the metal specimens with either Silicone A or Silicone B. It was also determined that gel could be formed in this way by using the blend of 50% silicone and 50% azelate as the lubricant. However, there was no evidence of a similar gel formation when the bis(2-ethylhexyl)azelate was used alone to lubricate the specimens.

These experiments show that gel can be formed in silicone lubricants at nominal bulk temperatures by the rubbing of ferrous metals. Since there are points in a ball bearing where rubbing or sliding occurs, the white substance observed in the new synchro silicone-lubricated bearings at NAD, Crane, was probably generated within the bearings during preliminary operation of the synchros at the manufacturer's plant or during handling or shipment.

SURFACE CHEMICAL APPROACH TO LUBRICANT RETENTION

Ball bearings which are continuously supplied with lubricant or are relubricated periodically usually give long, reliable service. Liberal quantities of oil in a ball bearing reduce the tendency for boundary lubrication to occur. Thus bearings "flooded" with oil or lubricated with a grease should have a longer life than those where the supply of oil is very limited and cannot be replenished. Even the silicone lubricants would be expected to give more favorable performance under these conditions than those which prevail in the synchros at present. Shields and seals are often used with grease lubricated ball bearings in order to help retain the lubricant. However, shields are not effective in retaining oils, and the low torque requirements of synchros preclude the use of greases or bearing seals in these devices.

The unsatisfactory operation of synchros at NAD, Crane, arose primarily because of insufficient lubricant in the rotor bearings. This was most noticeable in the units removed from storage. The insufficiency appeared to have resulted from the loss of the very limited quantity of lubricant which had been placed in the bearings at assembly. Since the silicones used were of very low volatility, this loss must have arisen primarily because the lubricant had migrated from the bearings by creeping or spreading onto adjacent surfaces.

The tendency of a liquid to spread is usually measured by the equilibrium contact angle which a drop of the liquid makes with the surface on which it rests. This measurement is made at the liquid-solid interface as shown in Fig. 4. If the value of the contact angle is zero, the liquid spreads freely over the surface. As the contact angle increases, the tendency of a liquid to spread decreases, so that the contact angle is a useful inverse measure of spreadability or wettability (20).

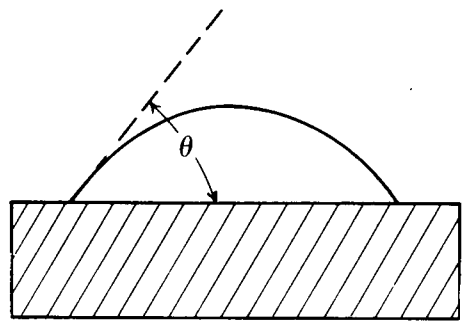

Fig. 4 — Equilibrium contact angle diagram

It has been established that the contact angle is related to both the surface tension of the liquid and to the nature of the adhesive force between the liquid and the solid (15,20). If the adhesive force between the liquid and the solid surface exceeds the force of cohesion within the liquid (as expressed by the surface tension), wetting of the surface occurs and the liquid will spread.

The extent to which a solid surface attracts a liquid depends upon a fundamental property of the surface material, the surface energy. High surface-energy materials (typified by the ordinary metals, metal oxides, and most hard inorganic substances) exhibit large attractive forces and are completely wetted by a wide variety of liquids (20). On the other hand, low-energy solid surfaces, provided by soft solid organic materials, are less easily wetted (20). Thus the tendency of a liquid to spread on a solid surface depends on the relative surface energies of the surface and the liquid.

The term "critical surface tension of wetting" of a solid surface has been introduced by Zisman and coworkers (15,20) as an empirical index of the wettability of that material by liquids. It is defined as the surface tension that a liquid must possess to produce spreading. For example, if a solid surface has a critical surface tension of wetting of 25 dynes/cm, in general any liquid having a surface tension of less than 25 dynes/cm

will spread on that surface and any liquid having a surface tension above 25 dynes/cm will not spread. Exceptions to this general rule occur, and Zisman and coworkers (15,20) have pointed out that when some liquids are placed on certain high-energy surfaces spreading does not occur. Their investigations have shown that in these cases monomolecular films of the original liquid or its decomposition products have been deposited on the surface of the solid. These films have critical surface tensions of wetting lower than that of the original surface and lower than the surface tension of the liquid from which they have deposited. Thus spreading does not occur. Similar results have been obtained by a number of investigators (15) through the use of additives introduced into lubricating oils to give them nonspreading properties.

Much interest has developed in the past decade in the use of coatings on high-energy surfaces to prevent the spreading of liquids (15). Stearic acid, silicone resins, and other synthetic and naturally occurring materials have been used for this purpose. Zisman and coworkers (15,20) have found that the surface of a solid will exhibit the least adhesion and wettability and the largest contact angles with liquids when its outermost surface layer is composed of closely packed perfluoromethyl groups. Several commercially available fluorinated polymers have been found to have low critical surface tensions of wetting (20), and coatings of these materials show promise as a means of controlling the spread of lubricating liquids (15). Surfaces may be coated with Teflon (polytetrafluoroethylene) or FEP Teflon (a commercial copolymer of tetrafluoroethylene and hexafluoropropylene), products of E. I. duPont de-Nemours and Co., Inc. These materials have critical surface tensions of wetting of 18.5 and 17.0 dynes/cm respectively. Since most lubricating liquids have surface tensions of over 20 dynes/cm, coatings of these materials would prevent the spreading of oils. However, the method of application of these coatings to solid surfaces involves heating them to temperatures of 545° to 700°F. This is impractical in many cases, particularly where organic materials or low-melting-point alloys are to be coated.

During an investigation of the surface chemical properties of a number of materials, Bernett and Zisman (15) found that films of two fluorinated polymers made by the Minnesota Mining and Manufacturing Co. for use in research in connection with the development of water repellant coatings for textiles had unusually low critical surface tensions of wetting. These polymers, 2-(N-propylperfluorooctane sulfamido)ethyl acrylate and 1H,1H-pentadecafluorooctyl methacrylate, have critical surface tensions of wetting of only 11.1 and 10.6 dynes/cm respectively. It would be expected that they would prevent the spreading of any known liquid that would not dissolve them.

These two nonwettable fluorochemicals have the advantage that while the other fluorinated coatings mentioned require melting, sintering, or buffing processes, the new materials can be readily laid down as thin films from dilute solutions in an appropriate solvent. Hence, no heat treatment is required. A 2% solution of either of the two fluorochemicals in hexafluoroxylene or benzotrifluoride can be "painted" onto the surface to be treated with a camel's hair brush, tissue, or other medium suitable for transferring the material. After the solution evaporates, a thin, tightly adhering barrier film of the fluorochemical remains. Once the barrier film has been deposited, on a clean surface, it is not readily removed by any nonfluorinated solvent (15).

Although these fluorochemicals are readily dissolved by either hexafluoroxylene or benzotrifluoride, the hexafluoroxylene solvent is preferred by this Laboratory. However, some difficulty has arisen regarding the preparation and purification of this solvent. This is discussed in Appendix A.

Barrier films of the low-surface-energy fluorochemicals have been found to be effective in preventing the spreading of all types of lubricants for long periods of time (15) except possibly those containing high proportions of fluorine. Figure 5 shows a stainless steel plate treated with the fluorinated methacrylate and demonstrates the effectiveness of this material in retaining an ester, a chlorinated silicone, or a petroleum oil within the confines of an area circumscribed by the barrier film. This plate has been exposed to the atmosphere of the laboratory for over two years without loss of barrier effectiveness.

Preliminary experiments have indicated that films of the fluorinated methacrylate less than 1 micron thick will prevent the spreading of silicone, ester, and petroleum lubricants over the temperature range −65° to 350°F (−53.9° to

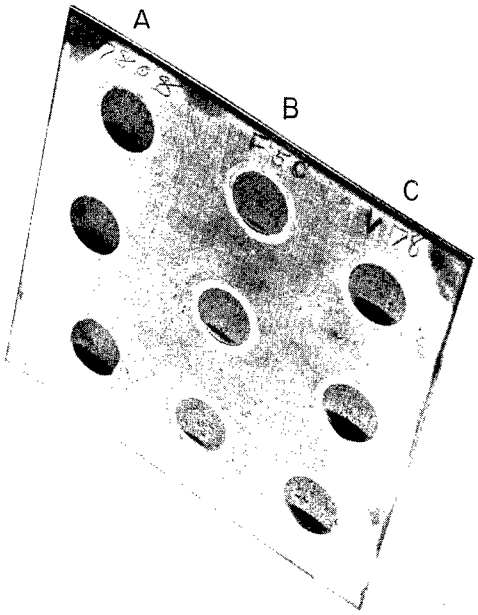

Fig. 5 — **A demonstration of the effectiveness** of barrier films (circular bands) in preventing the spreading of an ester (A), a chlorinated silicone (B), and a mineral oil (C) for over two years

176.7°C). The effectiveness of the barrier film at higher temperatures has not been fully explored. It is known, however, that when 200°C is approached, the useful life of the film is reduced. It is evident that if the films are to be used in this temperature region, more information is needed concerning the critical surface tension of wetting of the fluorochemical film at high temperatures. Since the surface tension of a liquid must always be higher than that of the barrier film if its spreading is to be prevented, it is also important to know the surface tension of candidate lubricants at the temperature at which they are to be used. For example, the surface tension of a typical chlorinated silicone falls from 21 dynes/cm at 68°F to only 10 dynes/cm at 450°F (12).

The low-surface-energy fluorochemicals have been recommended for use wherever the confinement of a liquid is desired, particularly in watches and clocks (15). They are also effective in preventing the creeping of oil, grease, or water onto such critical areas as brush and slip ring assemblies, electrical contacts, and devices subjected to high voltages.

The fluorinated methacrylate has been used successfully on potentiometers to confine the lubricant to the critical winding and contact areas (4). This is the material used to confine lubricants on the plate specimens during the investigation of the formation of silicone gel discussed earlier. It is now commercially available from the Minnesota Mining and Manufacturing Company under the designation FX 706. Early commercial production lots of this material contained suspended matter and required supplemental purification. This purification is discussed in Appendix B.

TESTS OF FLUOROCHEMICAL BARRIER FILMS IN SYNCHRO BALL BEARINGS

Preliminary Tests on Bearings

The unique ability of the low-surface-energy fluorochemicals to prevent the spreading of lubricants suggested that these materials could be used to prevent the loss of lubricants from lifetime-lubricated ball bearings in synchros, servo motors, and similar devices. Preliminary experiments revealed that when the edges of the rings of ball bearings were coated with barrier films as indicated in Fig. 6, quantities of oil were held within a bearing which were large as compared with the quantities retained in an untreated bearing. Barrier films are particularly effective with miniature bearings because, as a result of their small dimensions, the surface tension of the oil is a large force as compared with the gravity-produced forces ordinarily acting on the oil. In order to determine the effectiveness of the barrier film technique in preventing the loss of lubricants under more severe conditions, synchro bearings treated with the fluorinated methacrylate were filled approximately two-thirds full of Silicone B and of bis(2-ethylhexyl)azelate and placed in an oven at 125°C. The bearings were mounted on vertical shafts and rotated at 1150 rpm for one week. Examination at the end of that time indicated that no creeping or spreading of the lubricant had occurred.

Preparation and Lubrication of Synchros

Because of the need for an immediate solution to the problem of the poor performance of Navy synchros and servo motors, a study of the effectiveness of the films in extending the life and increasing the reliability of these devices was undertaken. The study was made with the cooperation of Code QECS at NAD, Crane, on new synchros and servo motors supplied by that activity.

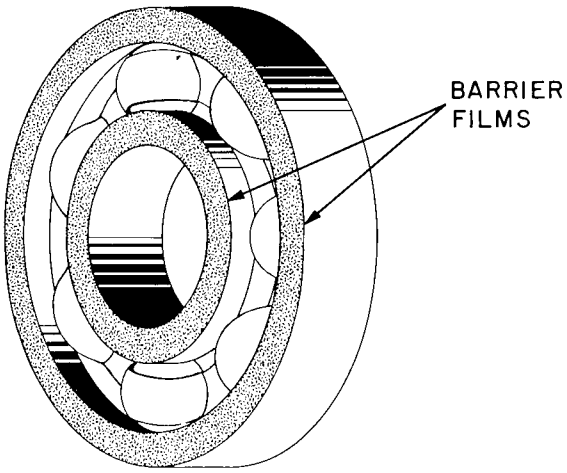

Fig. 6 — A ball bearing which has the critical surfaces coated with barrier films

Sixteen, new, size 11 synchros (3), all from one manufacturer, were removed from storage at NAD, Crane, for use in the investigation. They were disassembled by NAD personnel and the rotor bearings were removed. These synchros, like many similar devices now used in the Navy, were designed on the basis of a predictable life expectancy. Such items are discarded when they become inoperable, so no provision is made for disassembly for repairs, cleaning, or relubricating of the bearings. Consequently, it is difficult to remove the bearings without damaging them. Bearings removed under these conditions would normally be discarded and new ones installed. Unfortunately, new bearings were not available for the synchros selected for study and it was necessary to reuse the original bearings.

After removal of the shields, examination of the bearings with a 30-power microscope revealed that they all contained what appeared to be silicone gel and a small amount of unidentified foreign material. The bearings were cleaned ultrasonically using xylene as the solvent. The cleaning was repeated until there was no indication by bearing "feel" that any foreign material remained. However, all the bearings remained rough to some degree. This may have been the result of some damage during disassembly of the units. None were as smooth in operation as the new bearings used in the low-temperature experiments discussed earlier.

Better adhesion of the barrier films is obtained if the surface to be treated is given a final cleaning with a low-boiling solvent just prior to application of the film. Acetone worked well for this purpose, and it was used to clean the edges of the synchro bearing rings and outside surfaces of the shields. Following this treatment, the surfaces were coated with a 2% solution of the 1H,1H-pentadecafluorooctyl methacrylate as shown in Fig. 6. That part of each synchro armature shaft lying between the rear bearing seat and the slip rings was also coated with the barrier film. This was done to prevent the spreading onto the brush and slip ring area of any lubricant that might be thrown out of the bearing during shock and vibration tests.

After the barrier film was applied, the synchro bearings were lubricated with one or another of six lubricant compositions used in the low-temperature studies (Table 1). The lubricants chosen were those listed third, fourth, sixth, seventh, ninth, and tenth in Table 1, namely the silicone-azelate blend, bis(2-ethylhexyl)azelate, azelate blends I and II, the soap-thickened silicone-azelate blend, and the soap-thickened azelate ester. The bearings of all but three synchros were "flooded" with lubricant by filling them approximately two-thirds full. This required about 0.75 g for the small bearings and 1.5 g for the large bearings. This quantity of oil would probably be considered excessive by the ball bearing industry. Although it was realized that some of the oil might be thrown out of the bearings during shock and vibration testing or during operation, it was considered that this procedure provided a means of determining the maximum quantity of oil that could be held in a bearing by the barrier film and whether this quantity would be capable of extending the life of the bearing beyond the present limits.

The bearings of the remaining three synchros were provided with "limited" amounts of lubricant by placing three drops in each small bearing and five drops in each large bearing. This was done to determine if a small amount of lubricant would successfully lubricate synchro bearings if it was prevented from creeping away by the presence of the barrier films.

Preliminary Synchro Friction Torque Studies from −55° to 135°C

The sixteen synchros were reassembled by NAD, Crane, personnel, and the friction torque

UNCLASSIFIED

of each synchro was obtained at room temperature. Although all the bearings were rough in operation in varying degrees, the friction torque values obtained were all less than 0.05 oz-in. Ten of the synchros, including the three provided with a limited amount of lubricant, were selected for a series of preliminary tests prior to determining their endurance characteristics.

Since it has been established that factors other than lubricant viscosity are involved in the friction torque characteristics of assembled synchros, it was necessary to determine the maximum viscosity that could be tolerated for synchro lubricants. The −65°F viscosities of the lubricants used in the ten synchros selected for preliminary tests ranged upward from 3730 centistokes. When these synchros were subjected to a temperature of −55°C and the friction torques measured as required under the specification (3), it was found that it would be advisable to limit the −65°F viscosity of candidate lubricants to that of bis(2-ethylhexyl)azelate (8780 centistokes). As the bearings used in the synchros were not new and were somewhat rough in operation, it is possible that a lubricant having a −65°F viscosity somewhat higher than 8780 centistokes might have been satisfactory in new bearings.

The effect of elevated temperatures on three of the lubricant compositions, the silicone-azelate blend, the soap-thickened silicone-azelate blend, and the soap-thickened bis(2-ethylhexyl) azelate, was studied by exposing synchros lubricated with these lubricants to 135°C for 16 hours. This temperature is 10°C higher than required by the specification (3). The higher temperature was used to accelerate deterioration over that occurring at 125°C. At the end of 16 hours the friction torque was measured at the test temperature on three synchros, each lubricated with one of the three lubricants. The values obtained were less than 0.02 oz-in., which is well within the maximum of 0.05 oz-in. permitted by the specification (3).

All ten synchros were subjected to a temperature of 135°C for two hours in an altitude-high temperature test chamber at a pressure equivalent to 100,000 feet altitude (approximately 0.315 in. Hg). The friction torques measured at that temperature were all 0.02 oz-in. or less except for those obtained on the two units lubricated with the soap-thickened silicone-azelate blend and the soap-thickened bis(2-ethylhexyl)azelate, which were about 0.05 oz-in.

The performance of the barrier films under the influence of shock and vibration at room temperature was obtained by subjecting one synchro to high shock of 500 g's and four synchros to 5 hours of vibration over a range of 10 to 2000 cps (4-minute cycles at a 0.2-in. amplitude). The bearings in the synchro subjected to high shock had been treated with the barrier film and filled approximately two-thirds full of the soap-thickened silicone-azelate blend. The shock apparently caused some mechanical damage to the bearings, because the friction torque at room temperature rose from about 0.02 oz-in. before the shock test to over 0.07 oz-in. afterward. However, upon partial dissembly no creeping of the lubricant was observed, although some had been forceably ejected from the bearings in the form of a light spray. No lubricant had reached the slip ring and brush assembly, and an ample supply of lubricant remained in the bearings.

Of the four synchros that had been subjected to the vibration tests, two had been lubricated with the silicone-azelate blend, one contained soap-thickened silicone-azelate blend, and the remaining synchro had been lubricated with the soap-thickened bis(2-ethylhexyl)azelate. Damage to these bearings, if any, was slight; the friction torques of the first two synchros were less than 0.02 oz-in., and the latter two exhibited torques of less than 0.05 oz-in. Examination of the synchros revealed that no creeping of the bearing lubricants had occurred. However, discrete drops of spattered lubricant could be seen on the barrier-coated bearing shields. No lubricant was observed on the slip rings and brushes, and electrical continuity tests showed that no impairment of electrical contact had occurred.

The remaining five synchros which had been subjected to both high-temperature and low-temperature environments were partially disassembled in order to determine the effectiveness of the barrier films in controlling the loss of oil from the bearings. In no case was there any evidence of creeping of any of the lubricants.

In brief, the preliminary study of the ten synchros at a low temperature indicated that lubricant viscosity can be nearly 9000 centistokes at

−65°F without exceeding acceptable friction torques. It was also determined that the barrier film effectively prevents creeping of the lubricants from the bearings under conditions of high temperature and low pressure or when the synchros are subjected to shock and vibration.

Synchro Performance

The results of these preliminary tests indicate that, with the possible exception of the synchro which had been subjected to high shock, study of the performance of these synchros under the conditions of the 1200-hour endurance test (3) would be informative. The test consists of rotating the armatures of the synchros at 1150 rpm for 64 hours at −25°C, 96 hours at 125°C, and for the remaining 1040 hours at 23°C. For this investigation, the 125°C temperature requirement was raised to 135°C in order to increase the severity of this portion of the test. These endurance tests were performed by NAD, Crane, personnel, and the results of the study are reported here from data furnished by that activity (21).

After the first 168 hours of operation, during which the synchros were subjected to both high and low temperatures and different operating positions, friction torque data on all but one of the synchros were obtained. The torques at room temperature were all less than 0.05 oz-in. except that the torque of the synchro lubricated with the soap-thickened bis(2-ethylhexyl)azelate was 0.07 oz-in. This unit also failed the brush contact resistance requirement.

The synchros were partially disassembled at this point in order to determine the condition of the bearing lubricants and to evaluate the effectiveness of the barrier films. The personnel at NAD, Crane, reported (21) finding evidence of lubricant on bearing shields, rotor shafts, and slip rings and brushes. This was not unexpected, particularly for those flood-lubricated units which had been subjected to shock and vibration. Evidence of lubricant outside the bearing after the shock and vibration tests has been discussed earlier. It would be surprising if some of the lubricant in the flooded bearings was not forced out onto the barrier film as a result of centrifugal forces in an operating bearing. Since there is very low adhesion between the lubricant and the fluorochemical film, any liquid lubricant forced onto the film would be free to migrate under the effects of shock, vibration, gravity, or centrifugal force (15). Where some of the lubricants had escaped and had lodged as a thin film on other parts of the synchros, the silicone-azelate blend, the soap-thickened bis(2-ethylhexyl)azelate, and the azelate blend I had hardened and tended to flake off. The other lubricants deposited in that way were soft in texture. However, brush contact was not impaired by the deposition of any lubricant except in the unit lubricated with the soap-thickened bis(2-ethylhexyl)azelate.

After examination, the synchros were reassembled and the endurance tests continued at room temperature. Except for interruptions to permit examination of the bearings and lubricants, the test of each synchro was continued until bearing seizure occurred. The results are summarized in Table 2.

Examination of the data in Table 2 show the marked increase of bearing life made possible by the liberal use of improved lubricants confined to the bearings by barrier films. Whereas endurance of only 300 hours had been the rule with the silicone lubricants used previously, six of the synchros now operated from eight to nearly ten times longer. It is also notable that friction torques even at low temperatures remained remarkably low for well over 2000 hours of operation. Except for synchro 5b, which had been subjected to high shock, no synchro "flooded" with lubricant operated for less than 2386 hours. The three synchros that were still in operation at the time the informal NAD report was released were allowed to continue until bearing seizure occurred at approximately 3000 hours (22). The long lives of the six synchros indicate that bearings provided with barrier films can retain sufficient lubricant to ensure long operating life. On the other hand, it is seen that a few drops of lubricant in a synchro bearing is not sufficient to provide long life under the conditions of the endurance test even though the lubricant is restrained from creeping away by use of the barrier films.

After the synchros suffered bearing seizures, they were removed from test, dismantled, and examined by NAD personnel. The examination revealed that, perhaps for the first time, synchros of this type had accumulated sufficient hours of operation to show wear of the brush and slip ring assemblies. Although brush wear was

UNCLASSIFIED

TABLE 2
Results of Synchro Endurance Test

Synchro Designation	Lubricant	Friction Torque (oz-in.)			Hours of Operation Before Seizure
		at 23°C		at −55°C	
		168hr	2256 hr	2432 hr	
1a*	Silicone-azelate blend	<0.05	<0.05	<0.02	3000§
1b*	Silicone-azelate blend	<0.05	<0.05	<0.02	2622
1c	Silicone-azelate blend (limited)	0.02	–	–	238
2a*	Bis(2-ethylhexyl)azelate	<0.05	<0.05	<0.07	3000§
2b	Bis(2-ethylhexyl)azelate (limited)	–	–	–	834
3	Azelate blend I	0.02	–	<0.02‡	2386§
4	Azelate blend II	0.02	–	<0.02‡	3000§
5a*	Soap-thickened silicone-azelate blend	<0.05	<0.05	<0.02	2576
5b†	Soap-thickened silicone-azelate blend	<0.05	–	–	248
6a	Soap-thickened bis(2-ethylhexyl)azelate	0.07	–	–	430

*Synchros subjected to vibration.
†Synchro subjected to high shock.
‡At 2098 hours.
§Approximate (22).

frequently mentioned during the periodic examinations, electrical continuity through the brushes was not impaired except when a brush was worn completely off.

Usually only one bearing of each synchro seized. Thus the entries in Table 2 each imply that one bearing had exceeded the life of the companion bearing that failed. Examination of the seized bearings by NAD personnel revealed conditions typical of bearings that had failed after long periods of operation. In some instances ball retainers were broken or displaced. Usually the bearings were dry and contained brown powder and other solid particles. The brown powder is typical of that found in ball bearings which have operated with insufficient lubricant. The material consists of products of fretting corrosion combined with wear particles and decomposed or partially solidified lubricant. A white substance was observed on the balls and ball retainers of some of the bearings lubricated with the silicone-azelate blend.

Since the six flood-lubricated synchros that exhibited long endurance life had been lubricated with five different candidate lubricants, the advantage of any one lubricant over another was not apparent at that stage of the investigation. Had it been possible to use new bearings for those tests, the endurance might have been longer and the advantage of one lubricant over another might have been revealed.

The early indication of successful operation of six synchros out of the first group to ten units indicated the desirability of subjecting the remaining six synchros to standard qualification tests. Because of the very limited number of units available, the high and low shock, humidity, and salt spray tests were not performed (21). In order to add an element of acceleration to the endurance tests, the high-temperature tests were performed at 135°C rather than 125°C. With these exceptions, the six remaining synchros were subjected to the Standard Qualification Tests as outlined in specification Mil-S-0020708B(WEP) (3) and detail specification Mil-S-20708/1A. The tests were performed by NAD personnel, and the results given in this report have been obtained from the data supplied by that activity (21).

After the first 168 hours of operation of the high and low temperature endurance test (3), all the synchros passed the friction torque requirements of 0.05 oz-in. or less. Examination

of the synchros at that time revealed that because of the rather large amount of lubricant placed initially in the bearings, some had been forced out during the vibration tests in the first 168 hours of operation. Two synchros exhibited initial brush wear. Although it was reported that some of the lubricants had reached slip ring and brush assemblies and had hardened, brush contact resistance remained within specification limits.

The synchros were reassembled and the endurance test continued at the test temperature of approximately 23°C. Operation was continued with periodic interruptions for inspection, friction torque, and brush contact measurements. After 2152 hours of operation friction torque and brush contact resistance were within specification limits (3). In order to determine the ultimate life of the bearings the synchros were allowed to operate continuously until bearing seizure occurred. A summary of the test results is given in Table 3.

Examination of the test data in Table 3 again reveals the long operating life made possible by use of the barrier film in conjunction with improved lubricants. The operation for nearly 4000 hours with the bis(2-ethylhexyl) ester lubricant was some 1000 hours longer than that attained by any of the first group of synchros. The shorter lives of the first group may have resulted from the severity of the additional preliminary testing of these units. It is significant that approximately 1000 hours shorter life was obtained with those synchros lubricated by the soap-thickened bis(2-ethylhexyl)azelate. This indicated that the addition of the soap to the ester did not sufficiently supplement retention of the lubricant in the bearing to impart longer bearing life than with the barrier alone. On the contrary, it may have increased the amount of solids present to further aggravate the situation as the oil phase of the lubricant began to deteriorate. With the exception of synchro 6d the friction torques of the synchros remained below 0.05 oz-in., even at −55°C, for well over 2000 hours of operation.

As with the synchros in the first group, brush wear was quite severe, although no impairment of brush contact was evident. Now that long operating life of synchros is possible, it may be advantageous to provide a lubricant for use on the slip rings and brushes or to make them of more wear-resistant materials. Results obtained in both tests indicated that the excess lubricant from the bearings which found its way to other parts of the synchro did no harm even though it may have solidified. It is possible that this spattering of excess lubricant might be alleviated by using less lubricant in the bearings, but this may result in a decreased operating life.

Study of the results of the investigation of the sixteen synchros show that the longest life had been attained by the synchros lubricated with bis(2-ethylhexyl)azelate. Since this lubricant permits these synchros to pass the friction torque requirements at −55°C, there appears to be no particular advantage in using blends of this material with the silicones.

Further proof of the effectiveness of the barrier film in extending the life of Navy synchros

TABLE 3
Results of Synchro Standard Qualification Tests

Synchro Designation	Lubricant	Friction Torque (oz-in.)			Hours of Operation Before Seizure*
		at 23°C		at −55°C	
		168 hr	2152 hr	1868 hr	
2c	Bis(2-ethylhexyl)azelate	<0.05	<0.05	<0.05	3600-4000
2d	Bis(2-ethylhexyl)azelate	<0.05	<0.05	<0.05	3600-4000
2e	Bis(2-ethylhexyl)azelate	<0.05	<0.05	<0.05	3600-4000
6b	Soap-thickened bis(2-ethylhexyl)azelate	0.02	<0.05	<0.05	3000
6c	Soap-thickened bis(2-ethylhexyl)azelate	0.02	<0.05	<0.05	3000
6d	Soap-thickened bis(2-ethylhexyl)azelate	0.02	<0.05	0.07	3000

*Approximate (22).

has been demonstrated recently at NAD. This activity has reported (22) that thirty size 9 synchros lubricated with bis(2-ethylhexyl)azelate and provided with the barrier film have all successfully passed the standard qualification test (3). The endurance phase of the test was discontinued after 3000 hours of operation with no failures. This is a significant achievement, since these synchros, which are smaller than the size 11 units studied previously, have smaller bearings and are reported (22) to have a less satisfactory performance record than that of the larger synchros.

Barrier Film Performance with a Silicone Oil

Because of the interest exhibited by several synchro manufacturers in using silicones as lubricants for rotor bearings, an investigation was made of the effectiveness of the barrier film in extending the life of silicone-lubricated synchros (23). For this purpose, eight new synchros of the type used in the previous study were made available by the manufacturer. The bearings were treated with the barrier film and lubricated by NRL personnel. Four units were flood lubricated with silicone A (normally used by this manufacturer), and four units were lubricated in the same way with bis(2-ethylhexyl)azelate. The synchros were assembled by the manufacturer and submitted to Code QECS, NAD, Crane, for the standard qualification tests under specification Mil-S-0020708B(WEP) (3) and detail specification Mil-S-20708/1A.

Endurance tests were stopped after 2500 hours of operation. All eight synchros passed all specification requirements. Examination of the units revealed severe brush wear, particularly in those lubricated with the silicone. The bearings which had been lubricated with the azelate ester had turned brown. Those lubricated with the silicone had turned black, which is typical of bearings containing finely divided metallic wear particles. The test indicates that use of the barrier film makes it possible to obtain relatively long synchro life even with a silicone lubricant.

TESTS OF BARRIER FILMS ON SERVO MOTOR BEARINGS

As indicated earlier in this report, the service and storage life exhibited by Navy servo motors, like that of the synchros, left much to be desired. Most of these devices had a life expectancy of less than 1000 hours. Silicones have been used as bearing lubricants presumably because of the small temperature coefficient of viscosity and low volatility of this class of material (22).

The successful application of the barrier films to Navy synchros suggested that this system might be used to extend the service and storage life of servo motors and servo motor-tachometer generators. The qualification test requirements for these devices are somewhat similar to those for synchros (3,24). However, unlike the synchros, servo motors operate at high rotational speeds of 6000 to 7000 rpm, which adds to the difficulty of retaining lubricants in the rotor bearings. In addition, temperatures as high as 175°C may be reached during operation. Previous investigation had shown that the barrier film was capable of withstanding this temperature.

In selecting a bearing lubricant for study in servo motors, azelate blend I was chosen because it contains 35% of bis(2,2-dimethyloctyl)azelate. This material has a higher viscosity and is less volatile than bis(2-ethylhexyl)azelate; thus a blend consisting of the two materials should be more suitable for high-temperature use than bis(2-ethylhexyl)azelate alone.

Since the −65°F viscosity of 14,500 centistokes of azelate blend I is much higher than that of the silicones now used, it was necessary to determine the low-temperature starting characteristics of servo motors lubricated with this blend. Sixteen units were supplied to NAD for standard qualification tests (22). The bearings of these motors had been treated with the barrier film and lubricated with azelate blend I by the manufacturer of the ball bearings. All units passed the low-temperature starting requirements (24), but performance on the endurance test was unsatisfactory. Post test examination suggested that the short lives were due to the use of bearings of inadequate quality for this application (22). Additional tests of four servo motor-tachometer generators fitted with proper bearings to which the barrier film has been applied are in progress at NAD, Crane. These units, lubricated with azelate blend I, have already completed over 3000 hours of successful operation during the endurance phase of the standard qualification test (22).

The dramatic increase in the life expectancy of silicone-lubricated synchros through the use of the barrier film prompted personnel at NAD to

determine the effectiveness of this technique in extending the operating life of silicone-lubricated servo motors. In order to compare the performance of a typical silicone lubricant with that of azelate blend I under the same conditions, two identical servo motors, fitted with proper bearings to which the barrier film had been applied by NAD, Crane, personnel were selected for this test. Both motors were flood lubricated, one with silicone A and the other with azelate blend I. Both motors operated satisfactorily at room temperature for 5000 hours at 6000 rpm. When the test was stopped at this point, examination of the bearings revealed that all were wet with liquid. Those that had been lubricated with the silicone were black, much as had been observed in the synchro bearings lubricated with this material. Obviously, the greatly improved performance of silicone-lubricated synchros and servo motors is due solely to the ability of the barrier film to hold sufficient quantity of silicone in the bearings to minimize the occurrence of boundary lubrication conditions.

Although only preliminary studies have been made of the effectiveness of the barrier film in improving the service life of servo motors, the early results appear promising. As was observed in the synchro investigation, it would appear that the lubricant retention afforded by the barrier film is of equal importance to the choice of the lubricant. However, when much higher operating temperatures are encountered, more attention must be given to the development of new materials capable of providing good lubrication under such conditions.

It is clear that the storage life of Navy synchros and servo motors will be greatly extended through the use of the barrier film technique. There has not been sufficient time for this aspect of the investigation to be completed. However, a number of synchros and servo motors containing bearings treated with the barrier film and lubricated with esters are being placed in storage by NAD, Crane (22). Tests will be performed by that activity at a later date to determine the effectiveness of the barrier film during long periods of storage.

The successful application of the barrier film technique in extending the life of synchros and servo motors indicates that this system could be used to bring about similar improvements in other types of Navy, Army, and Air Force equipment. The method could be used on motors, generators, computer mechanisms, guidance controls, and other electromechanical devices which must be lubricated for life. The films would also be effective in preventing the contamination of electrical contacts, brush and slip ring assemblies, and optical surfaces by the creeping of lubricants and other liquids into critical areas. Commercial adoption of the barrier film technique can be predicted confidently.

SUMMARY AND CONCLUSIONS

Much evidence has been accumulated by the U.S. Naval Ammunition Depot at Crane, Indiana, to the effect that the service and storage life of Navy synchros and servo motors has been unsatisfactory. It has been necessary to waive the endurance test requirement and accept units which will operate only one-third to one-half the time specified. Units removed from storage fail to pass specification requirements and are sometimes totally inoperable.

The examination of failed bearings, most of which had been lubricated with silicone oils, revealed much evidence of fretting corrosion, badly worn and broken ball retainers, dry residues, and lack of visible lubricant. Ball bearings obtained from new silicone-lubricated synchros which have been in storage contained particulate matter and a white flocculent substance believed to be silicone gel. It was found possible to form this material from silicone oils at room temperature in the presence of rubbing ferrous metals.

Investigation of the problem by NRL personnel has led to the conclusion that the widespread use of silicone oils as synchro bearing lubricants has been a major cause of poor synchro performance. The silicones, used because of their excellent low-temperature viscometric properties, low volatility, and high-temperature stability, tend to creep away from critical bearing areas during service and also while the synchros are in storage. Since the bearings cannot be relubricated in the field, boundary lubrication conditions soon prevail. The inability of the silicones to lubricate adequately under these conditions results in short bearing life.

Laboratory studies to determine the limiting low-temperature viscosity requirement for a synchro showed that for freely operating synchro

UNCLASSIFIED

bearings, the limiting value was well over 42,000 centistokes at −65°F. In assembled synchros the limiting viscosity was approximately 8800 centistokes because of other factors which add to the friction torque. The limiting viscosity may have been somewhat greater if new, smoother-operating bearings had been available. This would permit the use of lubricants better suited to high temperatures than the one chosen. Even a limiting viscosity of 8800 centistokes is several times the −65°F viscosity of typical silicone oils, which shows that candidate synchro lubricants need not be limited to this class of fluids.

Regardless of the type of lubricant used, a satisfactory solution of the problem required that means be devised to confine sufficient lubricant within the bearings to ensure a long operating life. This has been accomplished at NRL by coating the edges of the bearings with thin films of certain nonwettable fluorochemical compounds which are effective in blocking the creep of most oils over a variety of surfaces.

Tests made in cooperation with the U.S. Naval Ammunition Depot, Crane, Indiana have shown that the application of the nonwettable fluorochemical 1H,1H-pentadecafluorooctyl methacrylate (FX 706) to synchro bearings to aid in the retention of liberal amounts of an improved lubricant has extended the useful life of synchros from the 300 hours previously obtained to nearly 4000 hours. The lubricant used was a bis(2-ethylhexyl)azelate composition. This "barrier film" technique has extended the useful life of silicone-lubricated synchros to at least 2500 hours. This result is due to the ability of the barrier film to confine sufficient silicone fluid within the bearings to minimize the incidence of boundary lubrication. As a result of the greatly increased operating life made possible through the use of the barrier film, severe wear of synchro slip rings and brushes eventually develops; hence, even longer lives may be obtained either by making the slip rings and brushes from more wear-resistant materials or by lubricating them.

Preliminary tests of the effectiveness of the barrier film is extending the life of servo motors have resulted in 5000 hours of operation at room temperature with both silicone and ester-type lubricants. This is an increase in life expectancy of from five to ten times over present performance. However, in both the synchro and servo motor tests, bearings lubricated with the silicones showed more evidence of deterioration than those lubricated with esters.

A more extensive series of tests of servo motors treated with the barrier film is underway at the U.S. Naval Ammunition Depot, Crane, Indiana. Study of the benefits of using the barrier film to extend the storage life of both synchros and servo motors is also being undertaken by that activity.

The advantage of using the barrier film to obtain increased service life of synchros and servo motors has been recognized by both NAD, Crane, and the Bureau of Naval Weapons. As a result, specification requirements for the purchase of these devices are being revised in order to obtain the improved performance needed to enhance the reliability and effectiveness of the fleet.

Because of the tenfold increase in life expectance of Navy synchros and servo motors brought about through the use of the barrier film, this system could well be of value if applied to Army and Air Force components and to many other types of naval equipment. Since these applications may involve operating conditions more severe than those now encountered, it may be necessary to develop new materials for use as barrier films and lubricants.

RECOMMENDATIONS

1. It is recommended that the barrier film technique be used to upgrade the life and reliability of synchros and servo motors purchased by the Navy, Army, and Air Force.
2. The effectiveness of the barrier film system in extending the life expectancy of other types of military equipment should be investigated.
3. Additional studies of the performance of barrier film-lubricant systems at bearing temperatures above 200°C are desirable, and further effort in this direction is planned at NRL.
4. Other nonwettable materials suitable as barrier films should be developed; further effort is planned at NRL.
5. Except where bearing operating temperatures over 200°C may make it necessary it is recommended that silicones should be discontinued as lubricants for Navy synchros and servo motors.

6. New nongelling lubricants should be developed for use with barrier films at high temperatures.

7. It is recommended that ball bearing manufacturers exercise more care in cleaning bearings for synchros and servo motors and make certain that shields are properly installed.

8. In light of the increase in life expectancy afforded by use of the barrier film, it is evident that additional equipment life might result if synchro brushes and slip rings were made of more wear-resistant materials or were lubricated.

ACKNOWLEDGMENTS

The authors wish to thank the Minnesota Mining and Manufacturing Company for donating the nonwettable fluorochemical used in these studies. Thanks are also due Eastman Chemical Products, Inc., for donating the bis(2,2-dimethyloctyl)azelate used in certain of the lubricant compositions. The cooperation of manufacturers of ball bearings, synchros, and servo motors is very much appreciated. The authors are indebted to the U.S. Naval Ammunition Depot, Crane, Indiana, for making this cooperative investigation possible. Special thanks are due Mr. Ken Hahn, Mr. Robert Cron, Mr. John Moore, and others of Code QECS, NAD, Crane, for conducting the many special synchro and servo motor tests and for supplying test data and photographs. The authors also appreciate the cooperative interest and the support for this program that has been provided by Mr. M. W. Walters (RREN-4) and Mr. Paul Stone (RRMA-32), Bureau of Naval Weapons, and by Mr. Richard D'Antonio, SP 23, Special Projects Office. Thanks are due Mr. E. J. Brooks and Mr. S. H. Cress of the Analytical Chemistry Branch, NRL, for analyzing the residue from the FX 706 solution for metals and to Dr. R. E. Kagarise of the Physical Chemistry Branch, NRL, for making infrared studies of this material. Thanks are also due other members of the Surface Chemistry Branch, NRL: to Mr. J. G. O'Rear and Mr. P. J. Sniegoski, who performed the studies of the purification of the hexafluoroxylene solvent and the FX 706 barrier film solution, and to Mr. C. M. Henderson, who assisted in the investigation of the formation of silicone gel with the friction apparatus.

REFERENCES

1. Baker, H.R., FitzSimmons, V.G., Murphy, C.M., Romans, J.B., and Singleterry, C.R., "A Summary of the Present Status of Problems Concerning the Reliability and Production Yield of Miniature Precision Bearings for Spin Axis Gyros," NRL Memorandum Report 1558, Sept. 1964
2. FitzSimmons, V.G., "A Lubricant System for Synchro Bearings"; NAD, Crane, Report, "Synchro Bearing Lubrication Investigation," presented at the Precision Instrument Bearing and Lubricant Conclave, Indianapolis, Indiana, July 22, 1964
3. Military Specification Mil-S-0020708B(WEP), "Synchros, 60 and 400 Cycle, General Specification," Jan. 1, 1963
4. FitzSimmons, V.G., and Romans, J.B., "Some Factors Influencing the Life and Performance Reliability of High Precision Potentiometers," NRL Report 6287, May 1965
5. Awe, R.W., and Schieffer, H.M., "Silicones," Chapter 7 in "Synthetic Lubricants," R.C. Gunderson and A.W. Hart, editors, New York:Reinhold, 1962
   a. p. 285
   b. pp. 289-292
   c. pp. 314-316
   d. p. 276
   e. pp. 304-306
6. Mahoney, C.L., and Barnum, E.R., "Polyphenyl Ethers," Chapter 11, pp. 443-445, in "Synthetic Lubricants," R.C. Gunderson and A.W. Hart, editors, New York: Reinhold, 1962
7. Brophy, J.E., Militz, R.O., and Zisman, W.A., *Trans. ASME* **68:**355 (1946)
8. Hatton, R.E., "Introduction to Hydraulic Fluids," New York:Reinhold, 1962, pp. 258-260
9. Palmgren, A., "Ball and Roller Bearing Engineering," Philadelphia, S. H. Burbank and Co., Inc., 1945, pp. 30-37
10. Jones, F.C., and Wilcock, D.F., *Trans. ASME* **72:**817, Aug. 1950
11. Gainer, G.C., *Ind. and Eng. Chem.* **46:**2355 (1954)
12. "Technical Data Book S-10," General Electric Co., Silicone Product Dept., Waterford, N.Y.
13. Schieffer, H.M., and Van Dyke, J., *Trans. ASLE* **7:**32 (1964)
14. Bascom, W.D., Cottington, R.L., and Singleterry, C.R., "Dynamic Surface Phenomena in the Spontaneous Spreading of Oils on Solids," Advances in Chemistry Series, No. 43, Washington, D.C., American Chemical Society, 1964, p. 355
15. Bernett, M.K., and Zisman, W.A., "Prevention of Liquid Spreading or Creeping," Advances in Chemistry Series, No. 43, Washington, D.C., American Chemical Society, 1964, p. 332
16. Military Specification Mil-L-6085A, "Lubricating Oil, Instrument, Aircraft, Low Volatility," Oct. 9, 1957
17. Military Specification Mil-L-7808D, "Lubricating Oil, Aircraft Turbine Engine, Synthetic Base," Nov. 9, 1959
18. Bowden, F.P., and Thomas, P.H., "The Surface Temperature of Sliding Solids," *Proc. Royal Soc.* **A223:**29-40 (1954)
19. Goodzeit, C.L., Hunnicutt, R.P., and Roach, A.E., *Trans. ASME* **78:**1669 (1956)

20. Zisman, W.A., "Relation of the Equilibrium Contact Angle to Liquid and Solid Constitution," Advances in Chemistry Series, No. 43, Washington, D.C., *American Chemical Society*, 1964, p. 1
21. "Synchro Bearing Lubrication Investigation," Code QECS, U.S. Naval Ammunition Depot, Crane, Indiana, Report, 1964
22. Verbal communication from Code QECS, U.S. Naval Ammunition Depot, Crane, Indiana
23. "Bearing/Lubrication Tests Relative to Synchro Size 11," Code QECS, U.S. Naval Ammunition Depot, Crane, Indiana, Test Report, QECS1-RNC:sk, 8200/1, July 30, 1965
24. Military Specification Mil-S-22432, "Servo Motors, General Specification," Mar. 15, 1963; Military Specification Mil-S-22820(WEP), "Servo Motor-Tachometer Generator A.C., General Specification," Nov. 4, 1963

UNCLASSIFIED

Appendix A

PURIFICATION OF HEXAFLUOROXYLENE

The nonwettable fluorochemical polymers used in spreading and wetting studies by Bernett and Zisman* were obtained from the Minnesota Mining and Manufacturing Company as approximately 20% solutions by weight in hexafluoroxylene solvent. While preparing very dilute solutions of these materials for other purposes, Bowers, of this Laboratory, found that the films laid down from these dilute solutions were nonuniform and that if the solvent alone was allowed to evaporate on a copper surface, the surface suffered chemical attack. If the solvent was allowed to evaporate slowly from a glass surface, a white deposit remained which amounted to about 0.24% by weight. The residue was found to be soluble in acetone but not in water. Study of the contact angles of water and hexadecane on films of the residue indicated that the material contained fluorine atoms.†

The procedure believed to have been used to manufacture the hexafluoroxylene requires several steps of purification following the fluorination process. A final step involves the removal of trace acids.‡ The neutralization number of the hexafluoroxylene was found to be 0.68 mg KOH/gm of solvent.§ The presence of acids could have resulted from incomplete treatment at the time of manufacture of the solvent or the condition could have arisen during storage of the material.

Infrared analysis of the residue obtained from evaporation of the hexafluoroxylene indicated the presence of CF_3, the benzene ring, and carboxyl groups.¶ The evidence indicates that the impurity exists as an acid or mixture of acids, possibly fluorinated benzoic acids. The melting-point range of the hexafluoroxylene residue was found to be 118° to 127°C.§ It appears improbable, therefore, that the material consists of trifluoromethylbenzoic acids unless mixtures of these compounds are present. The melting points of these acids* lie considerably below or above the melting-point range of the unknown material. Although the material was not identified, the following steps were taken by O'Rear and Sniegoski of this Laboratory to establish means of purifying the hexafluoroxylene.§

The boiling range of the solvent was found to be 114° to 119°C at atmospheric pressure. Three fractional distillations were made with a 30-plate column; the reflux ratio was 16 to 1. Fractions were obtained of the material boiling over the range 113° to 114°C, at 114°C, and at 114.5°C. All three fractions had neutralization numbers of 0.0. This indicated that the impurity could be removed by distillation. Evaporation of these fractions left no residue.

In view of the evidence that the impurity found in the hexafluoroxylene interfers with the formation of uniform, well-adhering nonwettable fluorochemical films, certain minimum specifications have been established governing the purity of the solvent used. These are:

Boiling range (at 760 mm Hg)	113° to 118°C
Refractive index N_D^{20}	1.378 to 1.381
Density, D_4^{20}	1.39 to 1.40 gm/ml
Evaporation†	Pass
Neutralization Number‡	Pass

*M. K. Bernett and W. A. Zisman, "Prevention of Liquid Spreading or Creeping," Advances in Chemistry Series, No. 43, Washington, D.C., *American Chemical Society*, 1964, p. 332.

†R. C. Bowers, Surface Chemistry Branch, NRL, unpublished data.

‡R. L. Murray, W. S. Beanblossom, and B. H. Wojcik, *Ind. Eng. Chem.* **39:**302 (1947).

§J. G. O'Rear and P. J. Sniegoski, Surface Chemistry Branch, NRL, unpublished data.

¶R. E. Kagarise, Physical Chemistry Branch, NRL, unpublished data.

*A. E. Pavlath and A. J. Leffler, "Aromatic Fluorine Compounds," ACS Monograph 155, New York:Reinhold, 1962, pp. 279-280.

†One gram of the test fluid is placed in a weighed borosilicate Petri dish (50 mm in diameter and 15 mm high). Four No. 9 cork stoppers are spaced evenly about the rim of the dish to provide support for a watch glass (100 mm in diameter, with convex face toward dish). This assembly is kept at room temperature in a laboratory ventilating hood for two hours. At the end of this test the Petri dish should be free from visible liquid or solid residue and its gain in weight should not exceed 0.1 mg.

‡The neutralization number of the test sample should not exceed 0.05 mg KOH/g of solvent as determined by ASTM Designation D664-58, "Standard Method of Test for Neutralization Number by Potentiometric Titration," ASTM Standards, Part 17, 1965, p. 312.

UNCLASSIFIED

Appendix B
PURIFICATION OF FX 706

The fluorochemical barrier material, 1H,1H-pentadecafluorooctyl methacrylate, used to extend the life of Navy synchros and servo motors, was supplied by the Minnesota Mining and Manufacturing Company as a 2% solution by weight in hexafluoroxylene. The solution was designated as FX 706. This commercial production lot was the fluoropolymer from a scale-up of a laboratory preparation, samples of which had been supplied to the U.S. Naval Research Laboratory in research quantities several years ago. The first samples of the FX 706 received by the U.S. Naval Ammunition Depot at Crane, Indiana, contained a small amount of suspended matter, part of which settled out upon standing. Barrier films made from this lot performed satisfactorily at room temperature, but when tests of oil retention by a ring formed of the barrier film on a vertical stainless steel plate were conducted at 175°C, a difference appeared. Films from the original research sample of the fluorinated methacrylate would retain a drop of a methylphenyl silicone at this temperature for at least seven days, but the new supply would not hold it for 30 minutes. Admittedly the 175°C test is severe because at this temperature the surface tension of the silicone is approaching the critical surface tension of wetting of the barrier film surface. For oils of higher surface tension such as the diesters, the new solution would yield barriers which were effective at any temperature at which the esters could be properly used.

Since it is known that the presence of foreign particles in the barrier solution tends to interfere with the proper adhesion of the films, the suspended matter in the FX 706 was removed by centrifuging. This material amounted to about 4% by weight of the total solids present in the bulk sample. Spectrographic analyses showed the presence of small amounts of iron, aluminum, calcium, silicon, sodium, and traces of several other metals.* Infrared analysis of the solids removed by centrifuging indicated that it is mainly a high-molecular-weight fraction of fluoropolymer which is insoluble in the hexafluoroxylene. Polymerization processes are not easy to control. It is not yet clear whether the solid was formed by slow aggregation of high-molecular-weight molecules formed in the original synthesis or whether it is a product of continuing polymerization. A centrifuged solution of FX 706 in a Vycor container has remained free of sediment during six weeks of intermittent exposure to direct sunlight. The original research sample has remained clear for three years in normal laboratory storage.

Experiments showed that FX 706 solution clarified by centrifuging formed barrier films that were capable of retaining a silicone oil on a vertical plate at 175°C for several days. With this purification the solution is considered suitable for barrier coating miniature ball bearings to be used in synchros and servo motors.

It is understood that the manufacturer of the FX 706 has taken steps to ensure the delivery of the solution free from suspended material in the future. It is recommended that any of the FX 706 which contains sediment or is turbid should be centrifuged before use. It is also recommended that solutions of the barrier film material be stored in the dark. Refrigerated storage is probably not essential, but it would help reduce possible loss of solvent. Although no information is available about the effect of exposure to high relative humidity, storage and handling of the solution in a relatively dry atmosphere appears to be a reasonable precaution. In the absence of adequate information regarding the toxicity of hexafluoroxylene, FX 706 should be used with adequate ventilation.

*E. J. Brooks and S. H. Cress, Analytical Chemistry Branch, NRL, unpublished data.

Security Classification

DOCUMENT CONTROL DATA - R&D

(Security classification of title, body of abstract and indexing annotation must be entered when the overall report is classified)

1. ORIGINATING ACTIVITY *(Corporate author)* U.S. Naval Research Laboratory Washington, D.C. 20390	2a. REPORT SECURITY CLASSIFICATION Unclassified 2b. GROUP

3. REPORT TITLE

A NEW APPROACH TO LUBRICATING BALL BEARINGS

4. DESCRIPTIVE NOTES *(Type of report and inclusive dates)*

An interim report on one phase of the problem.

5. AUTHOR(S) *(Last name, first name, initial)*

FitzSimmons, V.G., Murphy, C.M., Romans, J.B., and Singleterry, C.R.

6. REPORT DATE December 28, 1965	7a. TOTAL NO. OF PAGES 28	7b. NO. OF REFS 24

8a. CONTRACT OR GRANT NO. NRL Problems C02-04 and C02-19 b. PROJECT NO. BuWeps Tasks RRMA 03 021/652-1/R001-07-01 c. and RREN 04 375/652-1/F008-01-05 d.	9a. ORIGINATOR'S REPORT NUMBER(S) NRL Report 6356 9b. OTHER REPORT NO(S) *(Any other numbers that may be assigned this report)*

10. AVAILABILITY/LIMITATION NOTICES

Distribution of this document is unlimited.

11. SUPPLEMENTARY NOTES	12. SPONSORING MILITARY ACTIVITY Dept. of the Navy (Bureau of Naval Weapons)

13. ABSTRACT

At the request of the Bureau of Naval Weapons, the Naval Research Laboratory undertook a study of the causes of unsatisfactory service and storage life of Navy synchros and servo motors. Silicone oils have been in wide use as the lubricant for the ball bearings of these devices because of the good low-temperature characteristics of these materials. Examination of bearings from synchros which failed qualification tests at the U.S. Naval Ammunition Depot, Crane, Indiana, gave evidence of fretting corrosion, broken bearing retainers, dry residues, and loss of lubricant. A white flocculent substance was found in new silicone-lubricated bearings. This substance could be reproduced in the laboratory at room temperature when rubbing ferrous metals were lubricated with silicones.

The principal cause of early synchro and servo motor bearing failure is believed to be the creeping away of the small supply of silicone lubricant from the load-carrying area of the bearings under service and storage conditions. Because of their low surface tensions and range of molecular size, silicones creep excessively over most solid surfaces. Depletion of the available lubricant soon leads to boundary lubrication in the bearing, and difficulties soon develop because silicones are known to be poor boundary lubricants for steel on steel. Studies proved that a lubricant based on bis(2-ethylhexyl)azelate satisfactorily lubricated synchro bearings at temperatures as low as −55°C. Creeping of lubricants composed either of the azelate ester or of silicones from ball bearings has been prevented by the use of low-energy fluorochemical barrier films.

The life of synchros containing bearings treated with the barrier film and lubricated with a bis(2-ethylhexyl)azelate composition has increased from 300 hours to nearly 4000 hours on standard qualification tests performed at NAD, Crane. Similar units lubricated with silicone oil have operated 2500 hours. Preliminary tests indicated that the barrier film made possible the operation of servo motors for 5000 hours at room temperature with either silicone or ester-type lubricants, an increase in life expectancy of 5 to 10 times. The ability of the barrier film to increase the storage life of synchros and servo motors is being bench tested intensively by NAD, Crane. One of the authors has visited a number of manufacturers of rotating components and ball bearings to assist in initiating the use of the fluoropolymer barrier films and the diester lubricants. For one critical classified Navy requirement an immediate and mandatory procurement of barrier-coated bearings has been authorized.

The increased performance requirements of new specifications for synchros and servos is based on their life expectancy using a barrier film on the bearings. These specifications, however, will contain no mandatory requirements for a barrier film, nor will they specify a particular product. The use of the barrier film to increase the life expectancy of other Navy equipment containing miniature ball bearings is anticipated. It is predicted that other new materials will become available for use as barrier films and lubricants so that there will be more than one source and supplier.

DD FORM 1 JAN 64 1473

Security Classification

14. KEY WORDS	LINK A ROLE	LINK A WT	LINK B ROLE	LINK B WT	LINK C ROLE	LINK C WT
Oil-barrier films						
Lubrication						
Ball Bearings						
Miniature electrical equipment						
Life expectancy						
Servo motors						
Synchros						
Gyroscopes						
Lubricants						
Specifications						
Low-temperature lubricants						
Surface properties						
Fluorine compounds						
Esters						
Silicon Compounds						
Coatings						
Films						
Gels						

INSTRUCTIONS

1. ORIGINATING ACTIVITY: Enter the name and address of the contractor, subcontractor, grantee, Department of Defense activity or other organization *(corporate author)* issuing the report.

2*a*. REPORT SECURITY CLASSIFICATION: Enter the overall security classification of the report. Indicate whether "Restricted Data" is included. Marking is to be in accordance with appropriate security regulations.

2*b*. GROUP: Automatic downgrading is specified in DoD Directive 5200.10 and Armed Forces Industrial Manual. Enter the group number. Also, when applicable, show that optional markings have been used for Group 3 and Group 4 as authorized.

3. REPORT TITLE: Enter the complete report title in all capital letters. Titles in all cases should be unclassified. If a meaningful title cannot be selected without classification, show title classification in all capitals in parenthesis immediately following the title.

4. DESCRIPTIVE NOTES: If appropriate, enter the type of report, e.g., interim, progress, summary, annual, or final. Give the inclusive dates when a specific reporting period is covered.

5. AUTHOR(S): Enter the name(s) of author(s) as shown on or in the report. Enter last name, first name, middle initial. If military, show rank and branch of service. The name of the principal author is an absolute minimum requirement.

6. REPORT DATE: Enter the date of the report as day, month, year; or month, year. If more than one date appears on the report, use date of publication.

7*a*. TOTAL NUMBER OF PAGES: The total page count should follow normal pagination procedures, i.e., enter the number of pages containing information.

7*b*. NUMBER OF REFERENCES: Enter the total number of references cited in the report.

8*a*. CONTRACT OR GRANT NUMBER: If appropriate, enter the applicable number of the contract or grant under which the report was written.

8*b*, 8*c*, & 8*d*. PROJECT NUMBER: Enter the appropriate military department identification, such as project number, subproject number, system numbers, task number, etc.

9*a*. ORIGINATOR'S REPORT NUMBER(S): Enter the official report number by which the document will be identified and controlled by the originating activity. This number must be unique to this report.

9*b*. OTHER REPORT NUMBER(S): If the report has been assigned any other report numbers *(either by the originator or by the sponsor)*, also enter this number(s).

10. AVAILABILITY/LIMITATION NOTICES: Enter any limitations on further dissemination of the report, other than those imposed by security classification, using standard statements such as:

(1) "Qualified requesters may obtain copies of this report from DDC."

(2) "Foreign announcement and dissemination of this report by DDC is not authorized."

(3) "U. S. Government agencies may obtain copies of this report directly from DDC. Other qualified DDC users shall request through _____."

(4) "U. S. military agencies may obtain copies of this report directly from DDC. Other qualified users shall request through _____."

(5) "All distribution of this report is controlled. Qualified DDC users shall request through _____."

If the report has been furnished to the Office of Technical Services, Department of Commerce, for sale to the public, indicate this fact and enter the price, if known.

11. SUPPLEMENTARY NOTES: Use for additional explanatory notes.

12. SPONSORING MILITARY ACTIVITY: Enter the name of the departmental project office or laboratory sponsoring *(paying for)* the research and development. Include address.

13. ABSTRACT: Enter an abstract giving a brief and factual summary of the document indicative of the report, even though it may also appear elsewhere in the body of the technical report. If additional space is required, a continuation sheet shall be attached.

It is highly desirable that the abstract of classified reports be unclassified. Each paragraph of the abstract shall end with an indication of the military security classification of the information in the paragraph, represented as *(TS)*, *(S)*, *(C)*, or *(U)*.

There is no limitation on the length of the abstract. However, the suggested length is from 150 to 225 words.

14. KEY WORDS: Key words are technically meaningful terms or short phrases that characterize a report and may be used as index entries for cataloging the report. Key words must be selected so that no security classification is required. Identifiers, such as equipment model designation, trade name, military project code name, geographic location, may be used as key words but will be followed by an indication of technical context. The assignment of links, roles, and weights is optional.