NRL Report 7225

UNCLASSIFIED

A Machine Computation of the Grunsky Coefficients of Schlicht Functions

ALLEN R. MILLER

Emitter Location Branch
Electronic Warfare Division

March 22, 1971

NAVAL RESEARCH LABORATORY
Washington, D.C.

Approved for public release; distribution unlimited.

UNCLASSIFIED

CONTENTS

Abstract	ii
Problem Status	ii
Authorization	ii
DEFINITIONS AND THEOREMS	1
A FORTRAN PROGRAM FOR COMPUTING THE GRUNSKY COEFFICIENTS	4
ACKNOWLEDGMENTS	21
REFERENCES	21
APPENDIX A – Program for Computation of $C_{nm}^{(p)}$	22
APPENDIX B – Table of $C_{nm}^{(1)}$, $1 \leqslant n \leqslant m \leqslant 9$	31
APPENDIX C – Table of $C_{nm}^{(2)}$, $1 \leqslant n \leqslant m \leqslant 16$	94

ABSTRACT

If $f(z) = z + a_2 z^2 + a_3 z^3 + \cdots + a_n z^n + \cdots$ is analytic and univalent in the unit disk, then so is $[f(z^p)]^{1/p}$, $p = 2, 3, 4, \ldots$. The Grunsky coefficients $C_{nm}^{(p)}$ of $[f(z^p)]^{1/p}$ are defined implicitly by

$$\log \frac{[f(z^p)]^{1/p} - [f(\zeta^p)]^{1/p}}{z - \zeta} = \sum_{n,m=0}^{\infty} C_{nm}^{(p)} z^n \zeta^m$$

In this work the coefficients $C_{nm}^{(1)}$, $1 \leqslant n \leqslant m \leqslant 9$ of $f(z)$ and the coefficients $C_{nm}^{(2)}$, $1 \leqslant n \leqslant m \leqslant 16$ of $[f(z^2)]^{1/2}$ are computed using a high-speed digital computer.

PROBLEM STATUS

This is an interim report on a continuing problem.

AUTHORIZATION

NRL Problem R06-28
Project X-3607, Task 60708

Manuscript submitted November 25, 1970.

UNCLASSIFIED

A MACHINE COMPUTATION OF THE GRUNSKY COEFFICIENTS OF SCHLICHT FUNCTIONS

DEFINITIONS AND THEOREMS

Some preliminary definitions and theorems are given, so that what follows is self-contained.

Definition 1. A complex valued function of a single complex variable which is defined in some domain D is univalent or schlicht in D if and only if it is one-to-one there.

Definition 2. $\mathcal{S}$ is the set of all functions f analytic and univalent to $U = \{z : |z| < 1\}$ and such that $f(0) = 0, f'(0) = 1$.

Clearly, if $f \in \mathcal{S}$, f has a series expansion of the form $f(z) = z + a_2 z^2 + a_3 z^3 + \cdots$.

Definition 3. For $f \in \mathcal{S}$ the coefficients C_{nm} given implicitly by the series development

$$\log\left[\frac{f(z) - f(\zeta)}{z - \zeta}\right] = \sum_{n,m=0}^{\infty} C_{nm} z^n \zeta^m \tag{1}$$

are called the Grunsky coefficients of the function f.

The following is a well-known theorem:

Theorem 1. *If $f(z)$ is in $\mathcal{S}$ and p is any positive integer, then $[f(z^p)]^{1/p}$ is also in $\mathcal{S}$.*

Let $C_{nm}^{(p)}$ be the Grunsky coefficients of $[f(z^p)]^{1/p}$.

In 1939 Grunsky (1) showed that a necessary and sufficient condition for a function $f(z) = z + a_2 z^2 + \cdots + a_n z^n + \cdots$ analtyic in U to be schlicht in U is that

$$\left|\sum_{n,m=1}^{\infty} \lambda_n \lambda_m C_{nm}\right| \leqslant \sum_{n=1}^{\infty} |\lambda_n|^2/n$$

hold for all sequences $\{\lambda_n\}$ of complex parameters for which the right hand side converges. The C_{nm} in these inequalities are defined by Eq. (1).

In 1960 Charzynski and Schiffer (2) gave a new proof that $|a_4| \leqslant 4$ (for f in the class $\mathcal{S}$) with equality holding if and only if f is the Koebe function $z/(1 - e^{i\theta} z)^2 \in \mathcal{S}$. In their proof they used basically the above Grunsky inequalities for $[f(z^2)]^{1/2} \in \mathcal{S}$. This novel utilization of the Grunsky inequalities led to renewed interest in them.

In 1965 important results on the even coefficients of functions f in the class $\mathcal{S}$ were obtained using the Grunsky inequalities for $[f(z^2)]^{1/2}$ and the ideas of Charzynski and Schiffer; Ross (3) showed that $|a_6| \leqslant 6$ for functions near enough to the Koebe function, and Garabedian and coworkers (4) extended this local analysis to the general even coefficients a_{2n} and conjectured that the Grunsky inequalities ought to provide a way to prove that $|a_{2n}| \leqslant 2n$ globally. Ozawa (5) was able to show that $\operatorname{Re} a_6 \leqslant 6$, provided that a_2 is nonnegative.

Then in 1968 Pederson (6) showed that $|a_6| \leqslant 6$ globally by essentially making use of the Grunsky inequalities for $[f(z^2)]^{1/2}$.

A nontrivial difficulty in such studies, however, is the explicit determination (and computation) of the coefficients $C_{nm}^{(p)}$, $n,m \geqslant 1$. Hummel (7) obtained such a determination which is given in the following theorem.

Theorem 2. *$C_{nm}^{(p)} = 0$ if p does not divide $(n + m)$. If $(n + m) = hp$, then*

$$C_{nm}^{(p)} = \sum_{Q_h} C_{nm}^{(p)}(q_1, q_2, \ldots, q_h) \prod_{\mu=1}^{h} a_{\mu+1}^{q_\mu}, \tag{2}$$

where

$$C_{nm}^{(p)}(q_1, q_2, \ldots, q_h) = \sum_{k=0}^{\left[\frac{n}{p}\right]} \sum_{S_k} \frac{(-1)^{q-t+1} \prod_{\mu=0}^{q-1} [\omega-(k+\mu)p]}{p^q(\omega-kp) \prod_{\mu=1}^{h} s_\mu!(q_\mu-s_\mu)!},$$

where the q_μ and s_μ are nonnegative integers such that

$$Q_h = \left\{(q_1, q_2, \ldots, q_h) : q_\mu \geqslant 0, \sum_{\mu=1}^{h} \mu q_\mu = h\right\},$$

$$S_k = \left\{(s_1, s_2, \ldots, s_h) : 0 \leqslant s_\mu \leqslant q_\mu, \sum_{\mu=1}^{h} \mu s_\mu = k\right\},$$

$$q = \sum_{\mu=1}^{h} q_\mu, \quad t = \sum_{\mu=1}^{h} s_\mu, \quad \omega = n + (q-t)p.$$

UNCLASSIFIED

$$\prod_{\mu=1}^{h} s_\mu!(q_\mu - s_\mu)!$$

is the product of exactly q integers, provided that whenever 0! = 1 appears it is not counted. For computational purposes it will be convenient to define

$$\begin{aligned}
\alpha_\mu &= \omega - (k+\mu)p,\ 0 \leqslant \mu \leqslant (q-1),\\
\beta_1 &= p^q,\ \beta_2 = \omega - kp,\\
\beta_3 &= s_1,\ \beta_4 = s_1-1,\ \beta_5 = s_1-2,\ \cdots,\ \beta_{s_1+2} = 1,\\
\beta_{s_1+3} &= s_2,\ \beta_{s_1+4} = s_2-1,\ \cdots,\ \beta_{q+2} = 1.
\end{aligned}$$

Note that from Eq. (1) $C_{nm}^{(p)} = C_{mn}^{(p)}$. Also, it easily follows from Eq. (2) that

$$NC_{Nn,Nm}^{(Np)} = C_{n,m}^{(p)},$$

where N is any positive integer.

In the expression for $C_{nm}^{(p)}$ $(q_1, q_2, \ldots, q_h)$, where $n,m \geqslant 1$, there may be an ambiguity in the sense that $(\omega - kp)$ may vanish. This is easily resolved by making the

Observation. $(\omega - kp) > 0$ for all k such that $0 \leqslant k \leqslant [n/p]$.

Proof. It is first shown that $(\omega - kp)$ is nonnegative.

Now $\omega - kp = n + qp - tp - kp$

$$= p\left[\left(\frac{n}{p} - k\right) + (q-t)\right] \geqslant 0,$$

since

$$0 \leqslant k \leqslant \left[\frac{n}{p}\right] \leqslant \frac{n}{p} \text{ and } (q-t) \geqslant 0.$$

Suppose now that $(\omega - kp) = 0$, i.e., $(q-t) = k - n/p$. (n/p must therefore be an integer.) $(q-t) \geqslant 0$ and so $k \geqslant n/p$. This is impossible unless $k = n/p$. But then $q = t$, i.e.,

$$\sum_{i=1}^{h} q_i = \sum_{i=1}^{h} s_i, \text{ where } 0 \leqslant s_i \leqslant q_i.$$

This implies that $q_i = s_i$ for each i. But

$$\sum_{i=1}^{h} iq_i = h\,, \quad \sum_{i=1}^{h} is_i = k\,, \quad \text{and so} \quad k = h.$$

But $n/p + m/p = h$, i.e., $k + m/p = k$. Hence $m = 0$, which is a contradiction.

Therefore, when computing the $C_{nm}^{(p)}(q_1, q_2, \ldots, q_h)$, division by zero cannot occur.

Observation. If $k = 0$, then $(\omega - \mu p) > 0$ for all μ such that $0 \leqslant \mu \leqslant (q - 1)$.

Proof. Note that $S_0 = \{(0, 0, \ldots, 0)\}$ so that $t = 0$. Now

$$\omega - \mu p = n + (q - \mu)p \geqslant n + p > 0\,.$$

The four observations mentioned above are useful in the checking of hand and machine computations.

A FORTRAN PROGRAM FOR COMPUTING THE GRUNSKY COEFFICIENTS

The main result of this work is a Fortran program for the computation of the Grunsky coefficients $C_{nm}^{(p)}$ $(p = 1, 2)$. The program is found in Appendix A. The tables of coefficients $C_{nm}^{(1)}$, $1 \leqslant n \leqslant m \leqslant 9$ are in Appendix B, $C_{nm}^{(2)}$, $1 \leqslant n \leqslant m \leqslant 16$ are in Appendix C.

A word should be said about how to read these tables. One example should suffice to show how the tables are used. Suppose $C_{10\,2}^{(2)}$ is to be computed. $C_{10\,2}^{(2)} = C_{2\,10}^{(2)}$, and on the appropriate page of Appendix C the following tabulation is found:*

```
P = 2

C 210 =

      1/   2 ** 000001

     -1/   1 ** 100010

     -1/   1 ** 010100

     -1/   2 ** 002000

      3/   2 ** 200100

      3/   1 ** 111000

      1/   2 ** 030000
```

* Note that ** has no meaning except to make the tables more readable.

UNCLASSIFIED

-2/ 1 ** 301000

-3/ 1 ** 220000

5/ 2 ** 410000

-1/ 2 ** 600000

Reading down this table and from left to right we find that the first term of the formula for $C_{2\,10}^{(2)}$ is

$$\frac{1}{2} a_2^0\, a_3^0\, a_4^0\, a_5^0\, a_6^0\, a_7^1 = \frac{1}{2} a_7 .$$

The second term is

$$\frac{-1}{1} a_2^1\, a_3^0\, a_4^0\, a_5^0\, a_6^1\, a_7^0 = -a_2 a_6 .$$

Hence

$$C_{2\,10}^{(2)} = \frac{1}{2} a_7 - a_2 a_6 - a_3 a_5 - \frac{1}{2} a_4^2 + \frac{3}{2} a_2^2 a_5 + 3 a_2 a_3 a_4 + \frac{1}{2} a_3^3 - 2 a_2^3 a_4 - 3 a_2^2 a_3^2 + \frac{5}{2} a_2^4 a_3 - \frac{1}{2} a_2^6 .$$

Note that the first column appearing after ** always contains the powers of a_2, the second column contains the powers of a_3, etc. Also, the fractions (i.e., the $C_{nm}^{(p)}(q_1, q_2, \ldots, q_h)$) appearing to the left of ** are always in lowest terms.

It is obvious that the machine computation of the $C_{nm}^{(p)}(q_1, q_2, \ldots, q_h)$ must be done entirely in the integer mode. This is the prime reason why such a computation is long and tedious. The computation of [n/p] offers no problem since in Fortran, integer division provides no remainder.

The computations were done on the Univac 1108 and on the CDC 3800. The Fortran program is written so that it can (with only very minor changes) be compiled and executed on either machine.

The absolute value of an integer constant must not be greater than $2^{35} - 1 = 34359738367$ on the Univac 1108, $2^{47} - 1 = 140737488355327$ on the CDC 3800 computer. It is not surprising that the final computations would be done on the CDC computer. About 21 min of computing time on the CDC 3800 were used to generate the tables of coefficients of Appendixes B and C.

Let

$$\frac{\prod_{\mu=0}^{q-1} [\omega-(k+\mu)p]}{p^q (\omega-kp) \prod_{\mu=1}^{h} s_\mu!\, (q_\mu - s_\mu)!} = \frac{a_{nm}^{(p)}(s_1, s_2, \ldots, s_h)}{\beta_{nm}^{(p)}(s_1, s_2, \ldots, s_h)} ,$$

where $\alpha_{nm}^{(p)}, \beta_{nm}^{(p)}$ are relatively prime integers and $\beta_{nm}^{(p)} > 0$. Then

$$C_{nm}^{(p)}(q_1, q_2, \ldots, q_h) = \sum_{k=0}^{[n/p]} \sum_{S_k} \frac{(-1)^{q-t+1}\, \alpha_{nm}^{(p)}(s_1, s_2, \ldots, s_h)}{\beta_{nm}^{(p)}(s_1, s_2, \ldots, s_h)}$$

$$= \sum_{\bigcup_{k=0}^{[n/p]} S_k} \frac{(-1)^{q-t+1}\, \alpha_{nm}^{(p)}(s_1, s_2, \ldots, s_h)}{\beta_{nm}^{(p)}(s_1, s_2, \ldots, s_h)}$$

A brief description of the computation of $C_{nm}^{(p)}$ is given as a prologue to what follows. It will be assumed here that the calculations are being done by hand so that the reader who has little acquaintance with programming will be more able to follow the description of the machine computation as given later in the flow chart.

Suppose the $C_{nm}^{(p)}$, $1 \leqslant n \leqslant m \leqslant M$, where p divides 2M, are to be computed. The elements of sets $Q_1, Q_2, \ldots, Q_{2M/p}$ are computed (see pp. 8-11). Let n, m be given fixed integers such that p divides (n+m). $h = (n + m)/p \leqslant 2M/p$ and $[n/p]$ are computed. Let $(q_1, q_2, \ldots, q_h)$ be some fixed element of Q_h and compute $q = \Sigma q_\mu$. To compute $C_{nm}^{(p)}(q_1, q_2, \ldots, q_h)$ the elements of sets $S_0, S_1, \ldots, S_{[n/p]}$ must first be found. As noted before, $S_0 = \{(0, 0, \ldots, 0)\}$, and since $k \leqslant [n/p] < h$,

$$S_k = \{(s_1, s_2, \ldots, s_h):\ 0 \leqslant s_\mu \leqslant q_\mu,\ \sum_{\mu=1}^{h} \mu s_\mu = k\}$$

$$= \{(s_1, s_2, \ldots, s_k, 0, 0, \overset{(h-k)}{\ldots}, 0):\ 0 \leqslant s_\mu \leqslant q_\mu,\ \sum_{\mu=1}^{k} \mu s_\mu = k\},$$

so that the elements of S_k (when $1 \leqslant k$) are computed from the elements of Q_k subject to the conditions $0 \leqslant s_\mu \leqslant q_\mu$, $\mu = 1, 2, \ldots, k$. Of course when any one of these conditions is *not* satisfied, then $S_k = \emptyset$. Now let

$$(s_1, s_2, \ldots, s_h) \in \bigcup_{k=0}^{[n/p]} S_k$$

and compute $t = \Sigma s_\mu$, $\omega = n + (q - t)p$, and $(-1)^{q-t+1}\, \alpha_{nm}^{(p)}(s_1, s_2, \ldots, s_h)/\beta_{nm}^{(p)}(s_1, s_2, \ldots, s_h)$. Keeping in mind that $(q_1, q_2, \ldots, q_h)$ is fixed, repeat this calculation for each

$$(s_1, s_2, \ldots, s_h) \in \bigcup_{k=0}^{[n/p]} S_k\ .$$

UNCLASSIFIED

After combining the fractions $(-1)^{q-t+1}\alpha_{nm}^{(p)}/\beta_{nm}^{(p)}$ while reducing each intermediate result (i.e., each partial sum of

$$\sum \bigcup_{k=0}^{[n/p]} S_k)$$

to lowest terms, $C_{nm}^{(p)}(q_1, q_2, \ldots, q_h)$ is obtained in lowest terms. Hence

$$C_{nm}^{(p)}(q_1, q_2, \ldots, q_h) \prod_{\mu=1}^{h} a_{\mu+1}^{q_\mu}$$

is obtained.

Do the same calculation for each $(q_1, q_2, \ldots, q_h) \in Q_h$ thus obtaining $C_{nm}^{(p)}$. And by considering each pair (n,m) such that $1 \leqslant n \leqslant m \leqslant M$, the computation is completed.

Initially it was not known how extensive a computation of the $C_{nm}^{(p)}$ $(p = 1, 2)$ could be made. That is, it was not known how large the integers m_1 and m_2 could be made so that the $C_{nm}^{(1)}$, $1 \leqslant n \leqslant m \leqslant m_1$ and the $C_{nm}^{(2)}$, $1 \leqslant n \leqslant m \leqslant m_2$ could be computed using Fortran and the available fast core memory.

It was found that $C_{17\,17}^{(2)}$ could not be computed. More specifically, it was found that $C_{17\,17}^{(2)}(13, 2, 0, 0, \ldots, 0, 0)$ could not be computed since one of the integers $|\alpha_{nm}^{(p)}|$, $\beta_{nm}^{(p)}$ in this computation exceeded $2^{47} - 1$. Hence $m_2 = 16$ so that only enough memory locations need be reserved for the elements of sets $Q_1, Q_2, \ldots, Q_{16}$ in order to compute the $C_{nm}^{(2)}$, $1 \leqslant n \leqslant m \leqslant 16$.

Further, it was found that the number of memory locations needed to store the elements of sets $Q_1, Q_2, \ldots, Q_{18}$ and $Q_1, Q_2, \ldots, Q_{19}$ are 24,164 and 33,474, respectively. But, a maximum of 32,767 storage locations may be reserved for any given array using the current version of CDC 3800 Fortran language. Also, it was found that the $C_{nm}^{(1)}(q_1, q_2, \ldots, q_{n+m})$, $1 \leqslant n \leqslant m \leqslant 9$ could indeed be computed as quotients of integer quantities so that at least $m_1 = 9$. Since an already complicated program would become yet more complicated, it did not seem worthwhile to try to extend the value of m_1 beyond 9. However, this could be done by defining a new array to store the elements of sets Q_{19} and Q_{20}. Of course it would have to be determined whether the $C_{n\,10}^{(1)}(q_1, q_2, \ldots, q_{n+10})$, $1 \leqslant n \leqslant 10$ could actually be computed as quotients of integer quantities. If so, $m_1 = 10$ and a total of 46,014 memory locations is used to store $Q_1, Q_2, \ldots, Q_{20}$. Assuming that the $C_{nm}^{(1)}(q_1, q_2, \ldots, q_{n+m})$, $1 \leqslant n \leqslant m \leqslant m_1$ could be computed as quotients of integer quantities for an arbitrary m_1, we see that the fast core memory of the machine would soon be exhausted, for the CDC 3800 at NRL has about 57,000 words of fast core memory.

Note that since $C_{2n,2m}^{(2)} = (1/2)\, C_{n,m}^{(1)}$, the $C_{r,k}^{(2)}$ have been computed anyway for even r and k such that $2 \leqslant r \leqslant k \leqslant 18$.

Before the actual computation of the $C_{nm}^{(p)}$ can be started, the elements of each of the Q_h $(1 \leqslant h \leqslant 18)$ of Eq. (2) must be computed and stored in memory. The Q_h are determined by the following algorithm (8):

If we let

$$\left.\begin{aligned}
\mathcal{B}_{0,k} &= \emptyset, k = 0, 1, 2, \ldots, \\
\mathcal{B}_{r,k} &= \emptyset \text{ if } r > k, r,k \text{ nonnegative integers,} \\
\mathcal{B}_{1,1} &= \{(1)\}, \text{and} \\
\mathcal{B}_{r,k} &= \{(1+q_1, q_2, \ldots, q_{k-1}, 0): (q_1, q_2, \ldots, q_{k-1}) \in \mathcal{B}_{r-1,k-1}\} \cup \\
&\quad \{(0, q_1, q_2, \ldots, q_{k-r}, 0, 0, \overset{(r-1)}{\ldots}, 0): (q_1, q_2, \ldots, q_{k-r}) \in \mathcal{B}_{r,k-r}\} \\
&\quad \text{if } r \leqslant k, r \geqslant 1, k \geqslant 2,
\end{aligned}\right\} \tag{3}$$

then

$$Q_h = \bigcup_{i=1}^{h} \mathcal{B}_{i,h} = \{(q_1, q_2, \ldots, q_h): q_\mu \geqslant 0, \sum_{\mu=1}^{h} \mu q_\mu = h\}$$

$(h = 1, 2, 3, \ldots)$ is obtained.

Now let $n_{r,k}$ be the number of k-tuples in set $\mathcal{B}_{r,k}$ and let n_k be the number of k-tuples in set Q_k. Then $n_{r,k}$ is determined algorithmically from Eqs. (3) as follows:

$$\begin{aligned}
n_{0,k} &= 0, k = 0, 1, 2, \ldots, \\
n_{r,k} &= 0, \text{ if } r > k, r,k \text{ nonnegative integers,} \\
n_{1,1} &= 1, \text{ and} \\
n_{r,k} &= n_{r-1,k-1} + n_{r,k-r}, \text{ if } r \leqslant k, r \geqslant 1, k \geqslant 2.
\end{aligned}$$

Hence

$$n_k = \sum_{i=1}^{k} n_{i,k}, \; k = 1, 2, 3, \ldots .$$

Further, the number of memory locations required to store $Q_1, Q_2, \ldots, Q_\ell$ is given by the expression

$$\sum_{k=1}^{\ell} k n_k, \; \ell = 1, 2, 3, \ldots .$$

UNCLASSIFIED

It will be seen that the $\mathfrak{n}_{r,k}$, $\mathfrak{n}_k$ play an important role in the generation of the elements of the Q_h.

The $\mathfrak{n}_{r,k}$ $(1 \leqslant r, k \leqslant 20)$ are generated at the beginning of the program and stored in the array IA. The $\mathfrak{n}_k$ $(1 \leqslant k \leqslant 20)$ are then computed and stored in the array ISUM. The matrix $[\mathfrak{n}_{r,k}]$ and k against $\mathfrak{n}_k$ are given below.

1	1	1	1	1	1	1	1	1	1	1	1	1	1	1	1	1	1	1	1
0	1	1	2	2	3	3	4	4	5	5	6	6	7	7	8	8	9	9	10
0	0	1	1	2	3	4	5	7	8	10	12	14	16	19	21	24	27	30	33
0	0	0	1	1	2	3	5	6	9	11	15	18	23	27	34	39	47	54	64
0	0	0	0	1	1	2	3	5	7	10	13	18	23	30	37	47	57	70	84
0	0	0	0	0	1	1	2	3	5	7	11	14	20	26	35	44	58	71	90
0	0	0	0	0	0	1	1	2	3	5	7	11	15	21	28	38	49	65	82
0	0	0	0	0	0	0	1	1	2	3	5	7	11	15	22	29	40	52	70
0	0	0	0	0	0	0	0	1	1	2	3	5	7	11	15	22	30	41	54
0	0	0	0	0	0	0	0	0	1	1	2	3	5	7	11	15	22	30	42
0	0	0	0	0	0	0	0	0	0	1	1	2	3	5	7	11	15	22	30
0	0	0	0	0	0	0	0	0	0	0	1	1	2	3	5	7	11	15	22
0	0	0	0	0	0	0	0	0	0	0	0	1	1	2	3	5	7	11	15
0	0	0	0	0	0	0	0	0	0	0	0	0	1	1	2	3	5	7	11
0	0	0	0	0	0	0	0	0	0	0	0	0	0	1	1	2	3	5	7
0	0	0	0	0	0	0	0	0	0	0	0	0	0	0	1	1	2	3	5
0	0	0	0	0	0	0	0	0	0	0	0	0	0	0	0	1	1	2	3
0	0	0	0	0	0	0	0	0	0	0	0	0	0	0	0	0	1	1	2
0	0	0	0	0	0	0	0	0	0	0	0	0	0	0	0	0	0	1	1
0	0	0	0	0	0	0	0	0	0	0	0	0	0	0	0	0	0	0	1

k	1	2	3	4	5	6	7	8	9	10	11	12	13	14	15	16	17	18	19	20
$\mathfrak{n}_k$	1	2	3	5	7	11	15	22	30	42	56	77	101	135	176	231	297	385	490	627

The elements of $\mathfrak{B}_{r,k}$ $(r \geqslant 2,\ k \geqslant 3)$ computed from $\mathfrak{B}_{r-1,k-1}$ will be called diagonal elements, the elements computed from $\mathfrak{B}_{r,k-r}$ shift elements.

$\mathfrak{B}_{r-1,k-1}$ contains $\mathfrak{n}_{r-1,k-1}$ elements, $\mathfrak{B}_{r,k-r}$ contains $\mathfrak{n}_{r,k-r}$ elements. The ith element $(1 \leqslant i \leqslant \mathfrak{n}_{r-1,k-1})$ of $\mathfrak{B}_{r,k}$ will be computed from the ith element of $\mathfrak{B}_{r-1,k-1}$. Similarly, the $(i + \mathfrak{n}_{r-1,k-1})$th element $(1 \leqslant i \leqslant \mathfrak{n}_{r,k-r})$ of $\mathfrak{B}_{r,k}$ will be computed from the ith element of $\mathfrak{B}_{r,k-r}$ (provided of course that $\mathfrak{B}_{r,k-r} \neq \emptyset$).

In order to see more clearly how the computation of the Q_h are made, the first few $\mathfrak{B}_{r,k}$ are given below.

$\mathcal{B}_{1,1}$	$\mathcal{B}_{1,2}$	$\mathcal{B}_{1,3}$	$\mathcal{B}_{1,4}$	$\mathcal{B}_{1,5}$	$\mathcal{B}_{1,6}$
(1)	(0,1)	(0,0,1)	(0,0,0,1)	(0,0,0,0,1)	(0,0,0,0,0,1)
	$\mathcal{B}_{2,2}$	$\mathcal{B}_{2,3}$	$\mathcal{B}_{2,4}$	$\mathcal{B}_{2,5}$	$\mathcal{B}_{2,6}$
	(2,0)	(1,1,0)	(1,0,1,0)	(1,0,0,1,0)	(1,0,0,0,1,0)
			(0,2,0,0)	(0,1,1,0,0)	(0,1,0,1,0,0)
					(0,0,2,0,0,0)
		$\mathcal{B}_{3,3}$	$\mathcal{B}_{3,4}$	$\mathcal{B}_{3,5}$	$\mathcal{B}_{3,6}$
		(3,0,0)	(2,1,0,0)	(2,0,1,0,0)	(2,0,0,1,0,0)
				(1,2,0,0,0)	(1,1,1,0,0,0)
					(0,3,0,0,0,0)
			$\mathcal{B}_{4,4}$	$\mathcal{B}_{4,5}$	$\mathcal{B}_{4,6}$
			(4,0,0,0)	(3,1,0,0,0)	(3,0,1,0,0,0)
					(2,2,0,0,0,0)
				$\mathcal{B}_{5,5}$	$\mathcal{B}_{5,6}$
				(5,0,0,0,0)	(4,1,0,0,0,0)
					$\mathcal{B}_{6,6}$
					(6,0,0,0,0,0)

Hence

$$Q_1 = \bigcup_{i=1}^{1} \mathcal{B}_{i,1} = \{(1)\},$$

$$Q_2 = \bigcup_{i=1}^{2} \mathcal{B}_{i,2} = \{(0,1), (2,0)\},$$

$$Q_3 = \bigcup_{i=1}^{3} \mathcal{B}_{i,3} = \{(0,0,1), (1,1,0), (3,0,0)\},$$

UNCLASSIFIED

$$Q_4 = \bigcup_{i=1}^{4} \mathcal{B}_{i,4} = \{(0,0,0,1), (1,0,1,0), (0,2,0,0), (2,1,0,0), (4,0,0,0)\},$$

$$\vdots$$

$$Q_{18} = \bigcup_{i=1}^{18} \mathcal{B}_{i,18} = \{(0,0,\ldots,0,1), \ldots, (18,0,\ldots,0,0)\}.$$

The one-dimensional array (or vector) B is defined to store the elements of the sets $\mathcal{B}_{r,k}$, $1 \leqslant r \leqslant k \leqslant 18$. The elements of the $\mathcal{B}_{r,k}$ are to be stored in this array in the following way:

$$1,0,1,2,0,0,0,1,1,1,0,3,0,0,0,0,0,1,1,0,1,0,\ldots,0,0,\ldots,0,1,\ldots,18,0,\ldots,0,0,$$

so that

$$B(1) = 1, B(2) = 0, B(3) = 1, B(4) = 2, B(5) = 0, B(6) = 0, \ldots,$$

$$B(24147) = 18, B(24148) = 0, \ldots, B(24164) = 0.$$

So the coordinate of the vector B which is reserved for the first coordinate of the first element of $\mathcal{B}_{r,k}$ is given by 1 if $r = k = 1$,

$$\left.\begin{aligned} &1 + \sum_{\mu=1}^{k-1} \mu\, n_\mu \quad \text{if } r = 1,\ k \geqslant 2, \\ &1 + \sum_{\mu=1}^{k-1} \mu\, n_\mu + \sum_{\mu=1}^{r-1} k\, n_{\mu,k} \quad \text{if } 2 \leqslant r \leqslant k. \end{aligned}\right\} \tag{4}$$

Note that the coordinate of B reserved for the first coordinate of the first element of Q_h $(2 \leqslant h \leqslant 18)$ is given by

$$1 + \sum_{\mu=1}^{h-1} \mu\, n_\mu,$$

and the coordinate of B reserved for the last coordinate of the last element of Q_h is given by

$$\sum_{\mu=1}^{h} \mu\, n_\mu.$$

The expressions of (4) are computed repeatedly in various parts of the program. For suppose that the elements of the sets $\mathcal{B}_{r,k}$ $(r \geqslant 2, k \geqslant 3)$ are to be computed and stored in B. The elements of $\mathcal{B}_{r,k}$ are determined from the elements of $\mathcal{B}_{r-1,\,k-1}$ and $\mathcal{B}_{r,\,k-r}$. But it must be known where in array B the first coordinate of the first element of each of $\mathcal{B}_{r-1,\,k-1}$ and $\mathcal{B}_{r,\,k-r}$ is stored. Also, it must be known where in array B the first coordinate of the first element of $\mathcal{B}_{r,k}$ is to be stored.

Therefore, in order to compute the expressions of (4) without having to write the same instructions repeatedly the subprogram BCOORD is defined and has the following calling sequence:

CALL BCOORD(I,J,ISUM,IA,IS)

where

I is the value of $r(1 \leqslant r \leqslant 18)$

J is the value of $k(2 \leqslant k \leqslant 18)$

ISUM is the array $[\mathcal{N}_k]$

IA is the array $[\mathcal{N}_{r,k}]$

IS is the coordinate of the vector B which is reserved for the first coordinate of the first element of $\mathcal{B}_{r,k}$.

To start the generation of the Q_h (i.e., the $\mathcal{B}_{r,k}$), B(1) = 1 is defined. Then the element of each of the $\mathcal{B}_{1,k} = \{(0,0,\ldots,0,1)\}$, k = 2, 3, . . . , 18 is generated and stored in vector B. B(4) = 2 and B(5) = 0 are then defined.

Flow charts for the part of the main program which generates the $\mathcal{B}_{r,k}$, $2 \leqslant r \leqslant 18, 3 \leqslant k \leqslant 18$ are given in Figs. 1, 2, and 3. In these flow charts and in the corresponding parts of the main program,

I is the value of r,

J is the value of k,

SD is initially the coordinate of vector B where the first coordinate of the first (diagonal) element of $\mathcal{B}_{r,k}$ is to be stored,

SDP is initially the coordinate of vector B where the first coordinate of the first element of $\mathcal{B}_{r-1,k-1}$ is stored,

NDP is the value of (k-1) $\mathcal{N}_{r-1,k-1}$, i.e., the number of memory locations of B occupied by $\mathcal{B}_{r-1,k-1}$,

SS is initially the coordinate of B where the first coordinate of the first shift element of $\mathcal{B}_{r,k}$ is to be stored,

SSP is initially the coordinate of B where the first coordinate of the first element of $\mathcal{B}_{r,k-r}$ is stored,

NSP is the value of (k-r) $\mathcal{N}_{r,k-r}$, i.e., the number of memory locations of B occupied by $\mathcal{B}_{r,k-r}$,

L, M, and N are indexes,

SW1 is a "logical switch" and is either 0 or 1.

UNCLASSIFIED

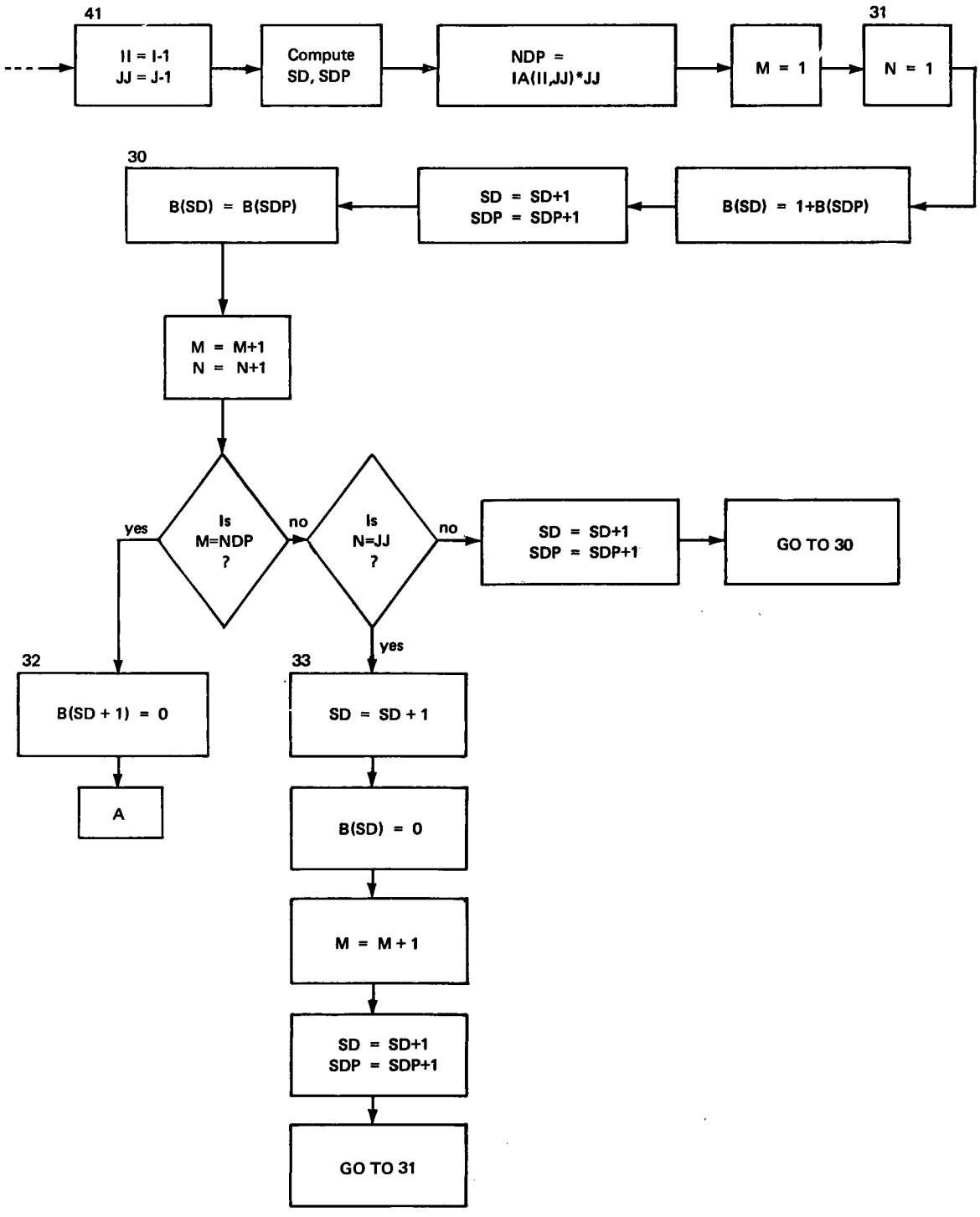

Fig. 1 - Flow chart for the computation of the diagonal elements of $\beta_{r,k}$

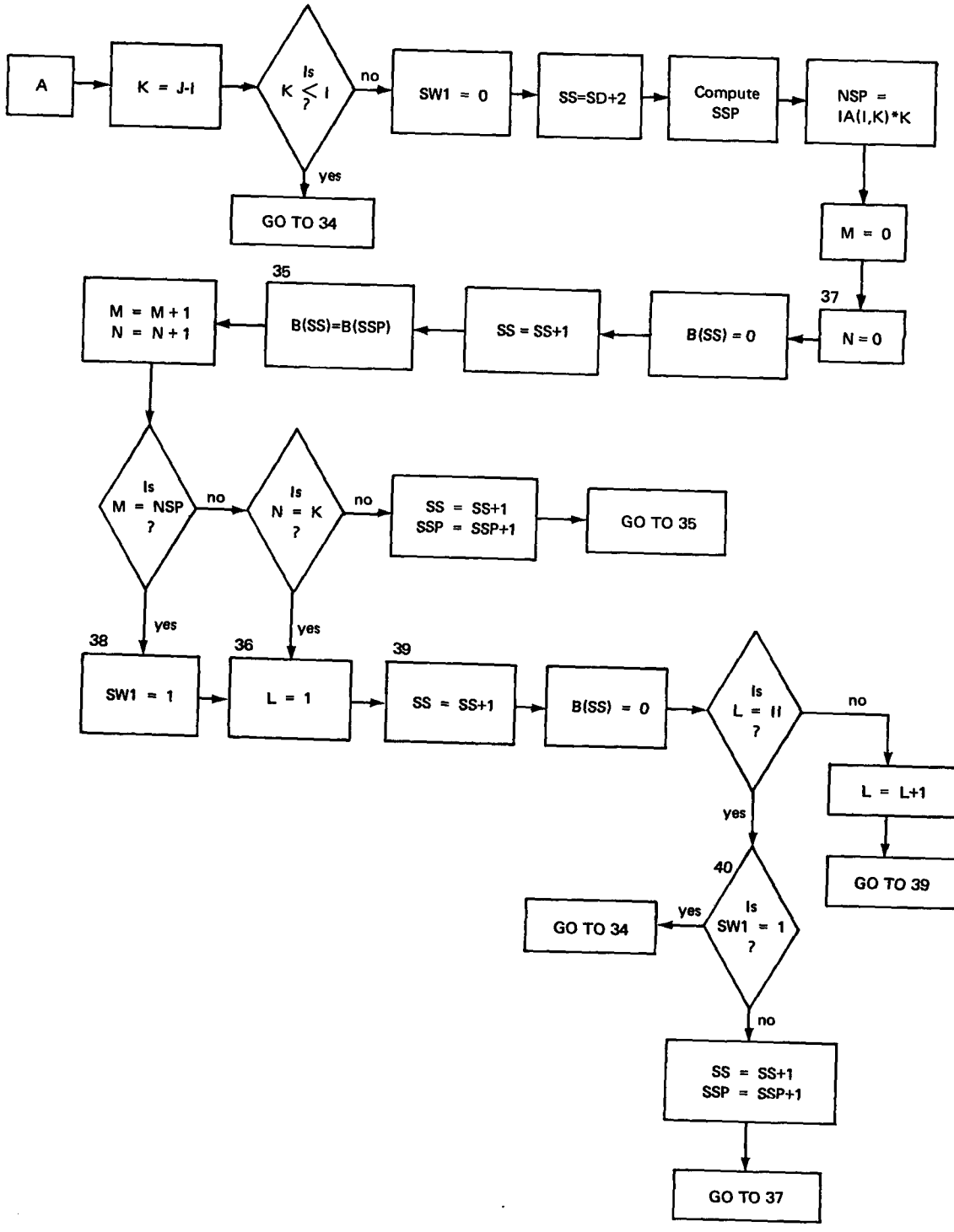

Fig. 2 - Flow chart for the computation of the shift elements of $\beta_{r,k}$

UNCLASSIFIED

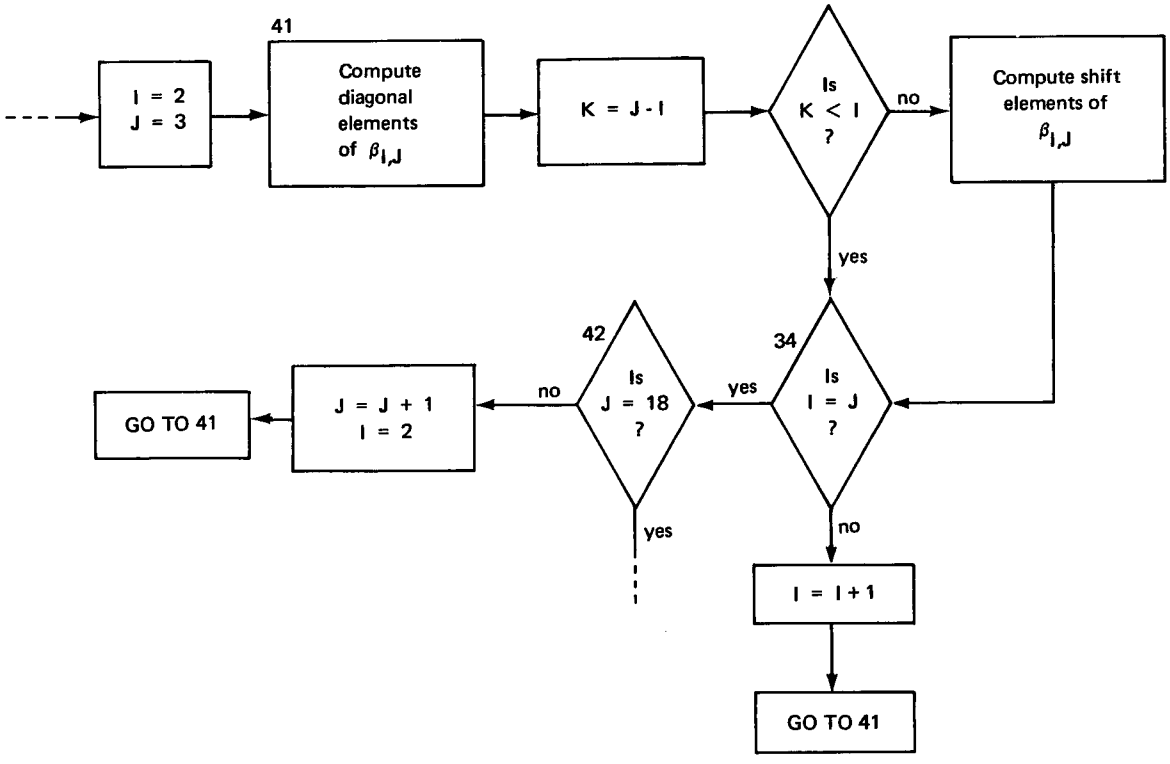

Fig. 3 - Flow chart for the computation of $\beta_{r,k}$,
$2 \leqslant r \leqslant 18,\ 3 \leqslant k \leqslant 18$

Recall that

$$S_k = \{(s_1, s_2, \ldots, s_h): 0 \leqslant s_\mu \leqslant q_\mu, \sum_{\mu=1}^{h} \mu s_\mu = k\}$$

$$= \{(s_1, s_2, \ldots, s_k, 0, 0, \overset{(h-k)}{\ldots}, 0): 0 \leqslant s_\mu \leqslant q_\mu, \sum_{\mu=1}^{k} \mu s_\mu = k\}.$$

To compute the elements of the sets S_k, the subprogram SUBSK is defined and has the following calling sequence:

CALL SUBSK(IQ,IH,K,IN1,IS,IN,ISW1)

where

IQ is the vector $(q_1, q_2, \ldots, q_h)$

IH is the value of h

K is the value of k

IN1 is the coordinate b of vector B where s_1 is stored

IS is the vector $(s_1, s_2, \ldots, s_k, 0, 0, \overset{(h-k)}{\ldots}, 0)$: $(s_1, s_2, \ldots, s_k) \in Q_k$

IN is the value of b + k - 1, i.e., the coordinate of vector B where s_k is stored

ISW1 is 0 or 1.

If ISW1 is 1, then $0 \leqslant s_\mu \leqslant q_\mu$ is not satisfied for some μ such that $0 \leqslant \mu \leqslant k$. If ISW1 is 0, then the double inequality is satisfied for each μ. Note that the first four parameters are inputs; the remaining ones are outputs.

The subprogram ARGSUM computes the a_μ, $0 \leqslant \mu \leqslant q\text{-}1$ and the β_μ, $1 \leqslant \mu \leqslant q+2$. It has the calling sequence

CALL ARGSUM(IQ,IS,N,K,IP,IH,Q,IA,IB,ISIGN,ISW1)

where

IQ is the vector $(q_1, q_2, \ldots, q_h)$

IS is the vector $(s_1, s_2, \ldots, s_h)$

N is the value of n

UNCLASSIFIED

K is the value of k

IP is the value of p

IH is the value of h

Q is the value of q

IA is the vector $(a_0, a_1, \ldots, a_{q-1})$

IB is the vector $(\beta_1, \beta_2, \ldots, \beta_{q+2})$

ISIGN is 1 or -1

ISW1 is 0 or 1.

ISIGN is 1 if q - t + 1 is even, -1 if q - t + 1 is odd. ISW1 is 1 if one of the $a_\mu = 0$ and is 0 otherwise. The last five parameters are outputs.

It is clear that a subprogram is needed to reduce fractions to lowest terms. Let a and b be integers, $a \geqslant 0$, $b > 0$, and let $a/b = \tilde{a}/\tilde{b}$, where $\tilde{a}, \tilde{b}$ are relatively prime and $\tilde{b} > 0$. The subprogram GCD has the calling sequence

CALL GCD(I1,I2,J1,J2)

where

I1 is the value of a

I2 is the value of b

J1 is the value of $\tilde{a}$

J2 is the value of $\tilde{b}$.

I1 and I2 are inputs, J1 and J2 outputs. Note that when control is returned to the calling program I2 is the value of the greatest common divisor of a and b. The g.c.d. of a and b is found using the Euclidean Algorithm.

Recall that

$$\frac{a_{nm}^{(p)}(s_1, s_2, \ldots, s_h)}{\beta_{nm}^{(p)}(s_1, s_2, \ldots, s_h)} = \frac{\prod_{\mu=0}^{q-1} [\omega - (k+\mu)p]}{p^q(\omega - kp) \prod_{\mu=1}^{h} s_\mu!(q_\mu - s_\mu)!} = \frac{\prod_{\mu=0}^{q-1} a_\mu}{\prod_{\mu=1}^{q+2} \beta_\mu},$$

where $\alpha_{nm}^{(p)}, \beta_{nm}^{(p)}$ are relatively prime integers and $\beta_{nm}^{(p)} > 0$. The subprogram REDFRC computes the $\alpha_{nm}^{(p)}, \beta_{nm}^{(p)}$. It has the calling sequence

CALL REDFRC(IA,IB,IQ,ISWE,I1,I2)

where

IA is the vector $(\alpha_0, \alpha_1, \ldots, \alpha_{q-1})$

IB is the vector $(\beta_1, \beta_2, \ldots, \beta_{q+2})$

IQ is the value of q

ISWE is 0 or 1

I1 is the value of $\alpha_{nm}^{(p)}(s_1, s_2, \ldots, s_h)$

I2 is the value of $\beta_{nm}^{(p)}(s_1, s_2, \ldots, s_h) > 0$.

ISWE is 1 if $|\alpha_{nm}^{(p)}|$ or $\beta_{nm}^{(p)}$ exceeds $2^{47} - 1$ and is 0 otherwise. One might ask: How is it determined that an integer quantity exceeds $2^{47} - 1$ when in fact an integer quantity greater than $2^{47} - 1$ cannot exist in the memory of the machine? A quick look at this subprogram will reveal that in the course of this computation comparisons with $2^{47} - 1$ are done in the double-precision mode.

Let $a/b + \tilde{a}/\tilde{b} = \alpha/\beta$ where (a,b), $(\tilde{a},\tilde{b})$, and (α,β) are pairs of relatively prime integers and $b,\tilde{b},\beta > 0$. The subprogram COMFRC combines fractions; its calling sequence is

CALL COMFRC(I1,I2,J1,J2,IA,IB,ISWE)

where

I1 is the value of a

I2 is the value of b

J1 is the value of $\tilde{a}$

J2 is the value of $\tilde{b}$

IA is the value of α

IB is the value of β

ISWE is 0 or 1.

UNCLASSIFIED

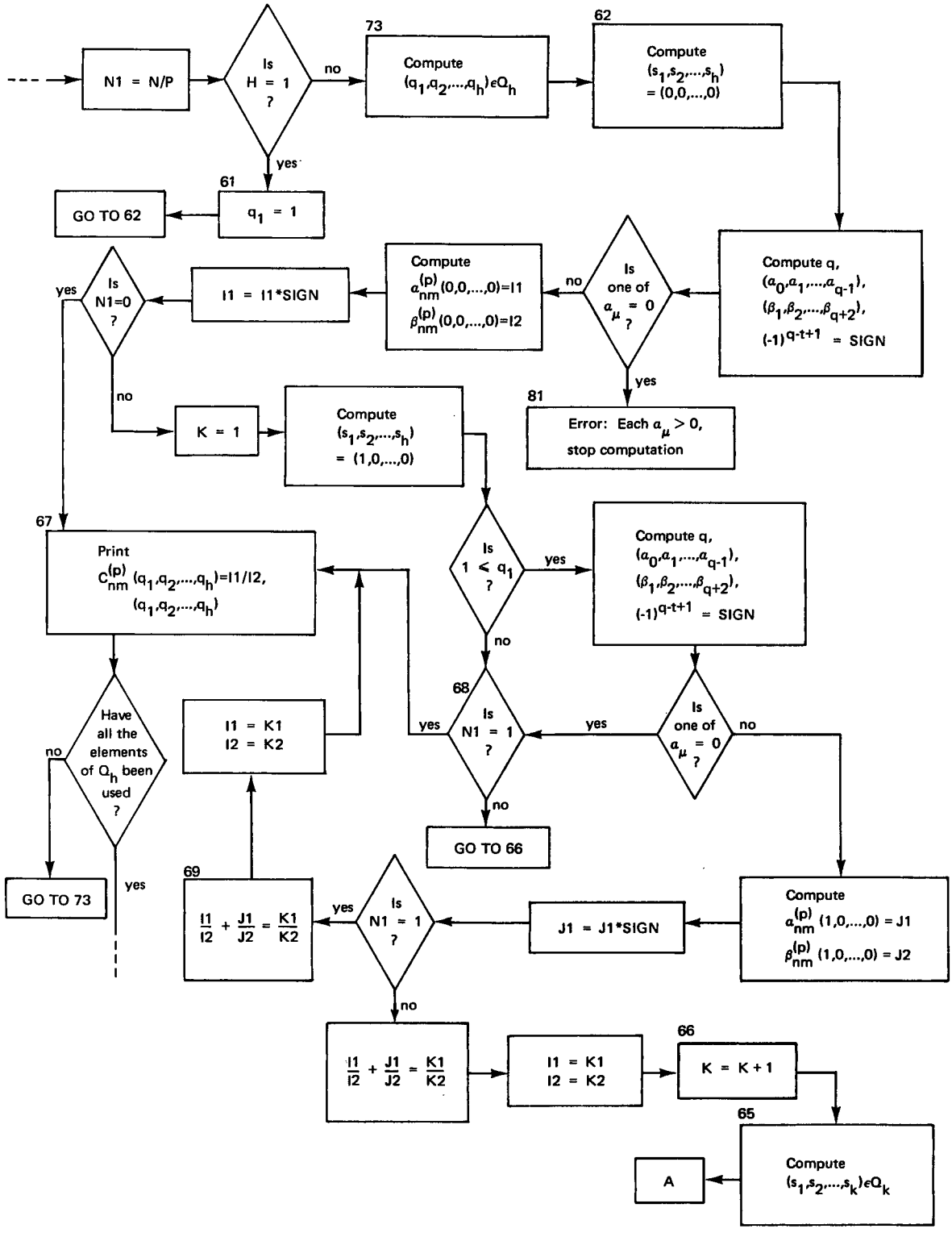

Fig. 4 - Flow chart for the computation of $C^{(p)}_{nm}$

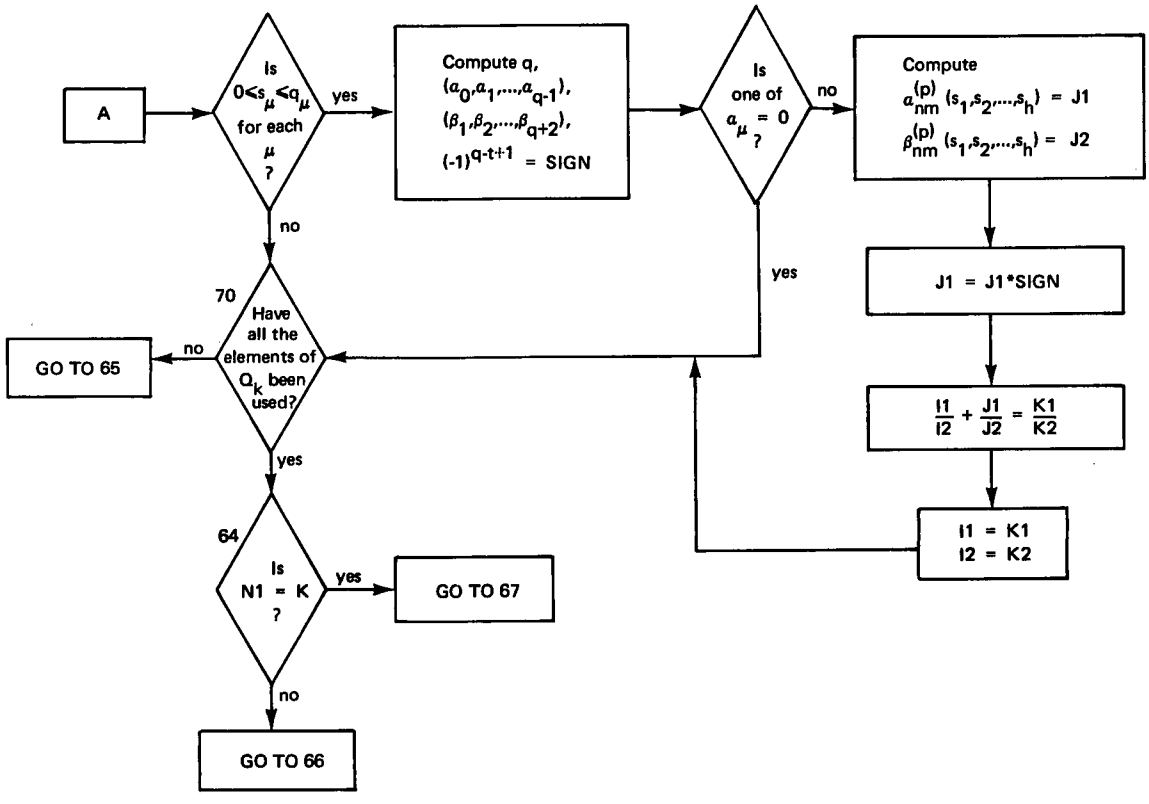

Fig. 4 - Flow chart for the computation of $C^{(p)}_{nm}$ (Continued)

UNCLASSIFIED

ISWE is 1 if in the course of this computation an integer quantity greater than $2^{47} - 1$ occurs; otherwise ISWE is 0. Clearly, this subprogram is needed to compute the partial sums of

$$\sum_{k=0}^{\left[\frac{n}{p}\right]} \sum_{S_k} \frac{(-1)^{q-t+1} a_{nm}^{(p)} (s_1, s_2, \ldots, s_h)}{\beta_{nm}^{(p)} (s_1, s_2, \ldots, s_h)} = C_{nm}^{(p)} (q_1, q_2, \ldots, q_h).$$

In Fig. 4 a flow chart is given for the computation of $C_{nm}^{(p)}$. No attempt at detail is made here since this would tend to obscure the logic. In this flow chart and in the corresponding part of the main program N is the value of n, P is the value of p, H is the value of h, and K is the value of k.

ACKNOWLEDGMENTS

This report derives from a masters thesis submitted to the Faculty of the Graduate School of the University of Maryland. I am grateful for the support given to me by the University of Maryland's Computer Science Center and the U.S. Naval Research Laboratory's Research Computation Center. Further, I sincerely appreciate Prof. James Hummel's suggestion that this computation be done and his patience and encouragement.

REFERENCES

1. Grunsky, H., "Koeffizientenbedingungen für schlicht abbildende meromorphe Funktionen," Math. Zeit. 45:29-61 (1939)

2. Charzynski, Z., and Schiffer, M., "A New Proof of the Bieberbach Conjecture for the Fourth Coefficient," Arch. Ratl. Mech. Anal. 5:187-193 (1960)

3. Ross, G.G., "Some Calculations Bearing on the Bieberbach Conjecture," Ph.D. dissertation, New York University (1965)

4. Garabedian, P.R., Ross, G.G., and Schiffer, M.M., "On the Bieberbach Conjecture for Even n," J. Math. Mech. 14:975-989 (1965)

5. Ozawa, M., "On the Sixth Coefficient of Univalent Functions," Kōdai Math. Sem. Rep. 17:1-9 (1965)

6. Pederson, R.N., "A Proof of the Bieberbach Conjecture for the Sixth Coefficient," Arch. Ratl. Mech. Anal. 31:331-351 (1968/69)

7. Hummel, J.A., "The Grunsky Coefficients of a Schlicht Function," Proc. Amer. Math. Soc. 15:142-150 (1964)

8. Blakley, G.R., "Combinatorial Remarks on Partitions of a Multipartite Number," Duke Math. J. 31:335-340 (1964)

Appendix A

PROGRAM FOR COMPUTATION OF $C_{nm}^{(p)}$

```
      PROGRAM GRUNSKY
      INTEGER B
      INTEGER SD,SDP,SS,SSP,SW1
      INTEGER P,H,H1,STH,Q,S,ALPHA,BETA
      INTEGER SW,SQ,SIGN,SWE,STK,FNK,HCOUNT
      DIMENSION B(24164)
      DIMENSION IA(20,20)
      DIMENSION ISUM(20)
      DIMENSION Q(18)
      DIMENSION S(18)
      DIMENSION ALPHA(18)
      DIMENSION BETA(20)
      COMMON B
   99 FORMAT(1H1)
  100 FORMAT(1H0)
      I=1
    1 IA(1,I)=1
      IF(I.EQ.20) GO TO 2
      I=I+1
      GO TO 1
    2 I=2
      J=2
    4 IF(J.EQ.21) GO TO 5
      K=J-I
      IF(K.LT.I)  GO TO 3
      IA(I,J)=IA(I-1,J-1)+IA(I,K)
      J=J+1
      GO TO 4
    3 IA(I,J)=IA(I-1,J-1)
      J=J+1
      GO TO 4
    5 IF(I.EQ.20) GO TO 6
      I=I+1
      J=I
      GO TO 4
    6 I=2
      J=1
    8 IA(I,J)=0
      I=I+1
      IF(I.EQ.21) GO TO 7
      GO TO 8
    7 J=J+1
      IF(J.EQ.20) GO TO 9
      I=J+1
      GO TO 8
    9 WRITE(6,99)
      I=1
   12 WRITE(6,10) (IA(I,J),J=1,20)
   10 FORMAT(20(1X,I3))
      I=I+1
      IF(I.EQ.21) GO TO 11
      GO TO 12
   11 I=1
      J=1
   16 ISUM(J)=0
   14 ISUM(J)=ISUM(J)+IA(I,J)
      I=I+1
```

UNCLASSIFIED

```
      IF(I.EQ.21) GO TO 13
      GO TO 14
   13 IF(J.EQ.20) GO TO 15
      J=J+1
      I=1
      GO TO 16
   15 WRITE(6,100)
      I=1
   19 WRITE(6,17) I,ISUM(I)
   17 FORMAT(24H NUMBER OF ELEMENTS IN Q,I3,2H =,I4)
      IF(I.EQ.20)GO TO 18
      I=I+1
      GO TO 19
   18 I=1
      ISUMM=0
   21 ISUMM=ISUMM+ISUM(I)*I
      IF(I.EQ.20) GO TO 20
      I=I+1
      GO TO 21
   20 WRITE(6,100)
      WRITE(6,22) ISUMM
   22 FORMAT(16H MEMORY NEEDED =,I7)
      WRITE(6,99)
      B(1)=1
      K=1
   27 I=1
      J=1
   24 J=J+ISUM(I)*I
      IF(I.EQ.K) GO TO 23
      I=I+1
      GO TO 24
   23 L=J+K
   26 B(J)=0
      J=J+1
      IF(J.EQ.L) GO TO 25
      GO TO 26
   25 B(J)=1
      IF(K.EQ.17) GO TO 28
      K=K+1
      GO TO 27
   28 B(4)=2
      B(5)=0
      I=2
      J=3
   41 II=I-1
      JJ=J-1
      CALL BCOORD(I,J,ISUM,IA,SD)
      CALL BCOORD(II,JJ,ISUM,IA,SDP)
      NDP=IA(II,JJ)*JJ
      M=1
   31 N=1
      B(SD)=1+B(SDP)
      SD=SD+1
      SDP=SDP+1
   30 B(SD)=B(SDP)
      M=M+1
      N=N+1
      IF(M.EQ.NDP) GO TO 32
      IF(N.EQ. JJ) GO TO 33
      SD=SD+1
      SDP=SDP+1
      GO TO 30
```

```
33 SD=SD+1
   B(SD)=0
   M=M+1
   SD=SD+1
   SDP=SDP+1
   GO TO 31
32 B(SD+1)=0
   K=J-I
   IF(K.LT.I) GO TO 34
   SW1=0
   SS=SD+2
   CALL BCOORD(I,K,ISUM,IA,SSP)
   NSP=IA(I,K)*K
   M=0
37 N=0
   B(SS)=0
   SS=SS+1
35 B(SS)=B(SSP)
   M=M+1
   N=N+1
   IF(M.EQ.NSP) GO TO 38
   IF(N.EQ.  K) GO TO 36
   SS=SS+1
   SSP=SSP+1
   GO TO 35
38 SW1=1
36 L=1
39 SS=SS+1
   B(SS)=0
   IF(L.EQ.II) GO TO 40
   L=L+1
   GO TO  39
40 IF(SW1.EQ.1) GO TO 34
   SS=SS+1
   SSP=SSP+1
   GO TO 37
34 IF(I.EQ.J) GO TO 42
   I=I+1
   GO TO 41
42 IF(J.EQ.18) GO TO 43
   J=J+1
   I=2
   GO TO 41
43 J=2
48 J1=J+1
   WRITE(6,44) J
44 FORMAT(5H     Q,I3)
   WRITE(6,100)
   CALL BCOORD(1,J,ISUM,IA,KS)
   CALL BCOORD(1,J1,ISUM,IA,KL)
   KL=KL-1
46 K=KS+J-1
   I=KS
   L=0
51 L=L+B(I)
   IF(I.EQ.K) GO TO 52
   I=I+1
   GO TO 51
52 WRITE(6,45) L,(B(I),I=KS,K)
45 FORMAT(1X,I3,3H***,18I3)
   IF(K.EQ.KL) GO TO 49
   KS=KS+J
   GO TO 46
```

UNCLASSIFIED

```
49 WRITE(6,99)
   IF(J.EQ.18) GO TO 47
   J=J+1
   GO TO 48
47 N=1
   M=1
   P=1
55 WRITE(6,53) P
53 FORMAT(6H     P=,I2)
   LNCT=6
   WRITE(6,100)
   I=N+M
   H=I/P
   H1=I-H*P
   IF(H1.EQ.0) GOTO 59
   WRITE(6,54) N,M
54 FORMAT(5H     C,2I2,4H = 0)
   WRITE(6,99)
60 IF(M.EQ.16) GOTO 58
   M=M+1
   GOTO 55
58 IF(N.EQ.16) GOTO 56
   M=1
   N=N+1
   GOTO 55
59 WRITE(6,57) N,M
57 FORMAT(5H     C,2I2,2H =)
   WRITE(6,100)
   HCOUNT=1
   N1=N/P
   IF(H.EQ.1) GOTO 61
   CALL BCOORD(1,H,ISUM,IA,STH)
73 I=1
63 Q(I)=B(STH)
   IF(I.EQ.H) GOTO 62
   I=I+1
   STH=STH+1
   GOTO 63
62 CALL SUBSK(Q,H,0,0,S,IN,SW)
   CALL ARGSUM(Q,S,N,0,P,H,SQ,ALPHA,BETA,SIGN,SW)
   IF(SW.EQ.1) GOTO 81
   CALL REDFRC(ALPHA,BETA,SQ,SWE,I1,I2)
   IF(SWE.EQ.1) GOTO 77
   I1=I1*SIGN
   IF(N1.EQ.0) GOTO 67
   K=1
   CALL SUBSK(Q,H,1,1,S,IN,SW)
   IF(SW.EQ.1) GOTO 68
   CALL ARGSUM(Q,S,N,1,P,H,SQ,ALPHA,BETA,SIGN,SW)
   IF(SW.EQ.1) GOTO 68
   CALL REDFRC (ALPHA,BETA,SQ,SWE,J1,J2)
   IF(SWE.EQ.1) GOTO 77
   J1=J1*SIGN
   IF(N1.EQ.1) GOTO 69
   CALL COMFRC(I1,I2,J1,J2,K1,K2,SWE)
   IF(SWE.EQ.1) GOTO 79
   I1=K1
   I2=K2
66 K=K+1
   CALL BCOORD(1,K,ISUM,IA,STK)
   K1=K+1
   CALL BCOORD(1,K1,ISUM,IA,FNK)
   FNK=FNK-1
```

```
 65 CALL SUBSK(Q,H,K,STK,S,LAST,SW)
    IF(SW.EQ.1)GOTO 70
    CALL ARGSUM(Q,S,N,K,P,H,SQ,ALPHA,BETA,SIGN,SW)
    IF(SW.EQ.1) GOTO 70
    CALL REDFRC(ALPHA,BETA,SQ,SWE,J1,J2)
    IF(SWE.EQ.1) GOTO 77
    J1=J1*SIGN
    CALL COMFRC(I1,I2,J1,J2,K1,K2,SWE)
    IF(SWE.EQ.1) GOTO 79
    I1=K1
    I2=K2
 70 IF(LAST.EQ.FNK) GOTO 64
    STK=LAST+1
    GOTO 65
 64 IF(N1.EQ.K) GOTO 67
    GOTO 66
 68 IF(N1.EQ.1) GOTO 67
    GOTO 66
 69 CALL COMFRC(I1,I2,J1,J2,K1,K2,SWE)
    IF(SWE.EQ.1) GOTO 79
    I1=K1
    I2=K2
 67 WRITE(6,71) I1,I2,(Q(I),I=1,H)
 71 FORMAT(2X,I16,1H/,I16,4H  **,18I3)
    LNCT=LNCT+1
    IF(LNCT.EQ.55)  GOTO 101
102 IF(HCOUNT.EQ.ISUM(H)) GOTO 72
    HCOUNT=HCOUNT+1
    STH=STH+1
    GOTO 73
 72 WRITE(6,99)
    IF(P.EQ.1) GOTO 74
    GOTO 60
 61 Q(1)=B(1)
    GOTO 62
 74 IF(M.EQ.9) GOTO 75
    M=M+1
    GOTO 55
 75 IF(N.EQ.9) GOTO 76
    M=1
    N=N+1
    GOTO 55
 76 P=2
    M=1
    N=1
    GOTO 55
101 WRITE(6,99)
    LNCT=6
    GOTO 102
 77 WRITE(6,78)
 78 FORMAT(2X,26H***ERROR IN SUB. REDFRC***)
    GOTO 56
 79 WRITE(6,80)
 80 FORMAT(2X,26H***ERROR IN SUB. COMFRC***)
    GOTO 56
 81 WRITE(6,82)
 82 FORMAT(2X,28H**ERROR. ARGSUM=0 WHEN K=0**)
 56 STOP
    END
    SUBROUTINE BCOORD(I,J,ISUM,IA,IS)
    DIMENSION ISUM(20)
    DIMENSION IA(20,20)
    K=J-1
    M=1
    IS=1
```

UNCLASSIFIED

```
 1 IS=IS+ISUM(M)*M
   IF(M.EQ.K) GO TO 2
   M=M+1
   GO TO 1
 2 IF(I.EQ.1) GO TO 4
   M=1
   N=I-1
 3 IS=IS+IA(M,J)*J
   IF(M.EQ.N) GO TO 4
   M=M+1
   GO TO 3
 4 RETURN
   END
   SUBROUTINE SUBSK(IQ,IH,K,IN1,IS,IN,ISW1)
   DIMENSION IQ(18)
   DIMENSION IS(18)
   INTEGER B
   COMMON B(24164)
   ISW1=0
   IN=IN1
   IF(K.EQ.0) GOTO 1
 9 I=1
 5 IS(I)=B(IN)
   IF(I.EQ.K) GOTO 4
   I=I+1
   IN=IN+1
   GOTO 5
 4 I=K+1
 8 IS(I)=0
   IF(I.EQ.IH) GOTO 7
   I=I+1
   GOTO 8
 7 I=1
11 IF(IS(I).GT.IQ(I)) GOTO 2
   IF(I.EQ.IH) GOTO 10
   I=I+1
   GOTO 11
10 RETURN
 2 ISW1=1
   RETURN
 1 I=1
 3 IS(I)=0
   IF(I.EQ.IH) GOTO 10
   I=I+1
   GOTO 3
   END
   SUBROUTINE ARGSUM(IQ,IS,N,K,IP,IH,Q,IA,IB,ISIGN,ISW1)
   DIMENSION IQ(18)
   DIMENSION IS(18)
   DIMENSION IA(18)
   DIMENSION IB(20)
   INTEGER Q,Q1,T,OMEGA,R
   ISW1=0
   ISW2=0
   I=1
   Q=0
 2 Q=Q+IQ(I)
   IF(I.EQ.IH) GOTO 1
   I=I+1
   GOTO 2
 1 I=1
   T=0
```

```
 4 T=T+IS(I)
   IF(I.EQ.IH) GOTO 3
   I=I+1
   GOTO 4
 3 OMEGA=N+(Q-T)*IP
   Q1=Q-1
   I=0
 6 IA(I+1)=OMEGA-(K+I)*IP
   IF(IA(I+1).EQ.0) GOTO 7
   IF(I.EQ.Q1) GOTO 5
   I=I+1
   GOTO 6
 5 IB(1)=IP**Q
   IB(2)=IA(1)
   I=3
16 J=1
11 R=0
   IF(IS(J).EQ.0) GOTO 12
 9 IB(I)=IS(J)-R
   IF(IB(I).EQ.1) GOTO 8
   I=I+1
   R=R+1
   GOTO 9
 8 I=I+1
   IF(J.EQ.IH) GOTO 10
   J=J+1
   GOTO 11
12 IF(J.EQ.IH) GOTO 10
   J=J+1
   GOTO 11
10 IF(ISW2.EQ.1) GOTO 14
   ISW2=1
   M=1
13 IS(M)=IQ(M)-IS(M)
   IF(M.EQ.IH) GOTO 16
   M=M+1
   GOTO 13
14 IEX=Q-T+1
   L=IEX/2
   M=IEX-2*L
   IF(M.EQ.0) GOTO 15
   ISIGN=-1
   RETURN
15 ISIGN=1
   RETURN
 7 ISW1=1
   RETURN
   END
   SUBROUTINE REDFRC(IA,IB,IQ,ISWE,I1,I2)
   DIMENSION IA(18)
   DIMENSION IB(20)
   DOUBLE PRECISION U,A,B
   INTEGER D
   ISWE=0
   IQ1=IQ+2
   U=140737488355327D0
   I=1
   J=1
 4 N=IA(I)
   IF(N.LT.0)  GOTO 10
   ISIGN=1
```

UNCLASSIFIED

```
11 D=IB(J)
   CALL GCD(N,D,IA(I),IB(J))
   IA(I)=IA(I)*ISIGN
   IF(I.EQ.IQ) GOTO 1
   I=I+1
   GOTO 4
 1 IF(J.EQ.IQ1) GOTO 3
   J=J+1
   I=1
   GOTO 4
 3 A=1D0
   I1=1
   I=1
 6 A=A*IA(I)
   I1=I1*IA(I)
   IF(A.GT.U) GOTO 5
   IF(I.EQ.IQ) GOTO 7
   I=I+1
   GOTO 6
 7 B=1D0
   I2=1
   J=1
 8 B=B*IB(J)
   I2=I2*IB(J)
   IF(B.GT.U) GOTO 5
   IF(J.EQ.IQ1) GOTO 9
   J=J+1
   GOTO 8
 5 ISWE=1
 9 RETURN
10 ISIGN=-1
   N=IABS(N)
   GOTO 11
   END
   SUBROUTINE COMFRC(I1,I2,J1,J2,IA,IB,ISWE)
   DOUBLE PRECISION U,A1,A2,A,B
   INTEGER SIGNI1,SIGNJ1
   U=140737488355327D0
   ISWE=0
   IF(I1.LT.0) GOTO 1
   SIGNI1=1
 3 IF(J1.LT.0) GOTO 2
   SIGNJ1=1
 4 CALL GCD(I1,J1,L1,M1)
   L1=L1*SIGNI1
   M1=M1*SIGNJ1
   CALL GCD(I2,J2,L2,M2)
   CALL GCD(J1,J2,K1,K2)
   A1=1D0*L1
   A1=A1*M2
   A2=1D0*L2
   A2=A2*M1
   A=A1+A2
   B=1D0*L2
   B=B*M2
   A1=DABS(A1)
   A2=DABS(A2)
   A=DABS(A)
   IF(A1.GT.U.OR.A2.GT.U) GOTO 5
   IF(A.GT.U.OR.B.GT.U)   GOTO 5
   IN=L1*M2+L2*M1
   ID=L2*M2
   IF(IN.EQ.0) GOTO 6
   IF(IN.LT.0) GOTO 7
   CALL GCD(IN,K2,IA1,IB1)
```

```
8 CALL GCD(K1,ID,IA2,IB2)
  A=1D0*IA1
  A=A*IA2
  A=DABS(A)
  B=1D0*IB1
  B=B*IB2
  IF(A.GT.U.OR.B.GT.U) GOTO 5
  IA=IA1*IA2
  IB=IB1*IB2
  RETURN
1 SIGNI1=-1
  I1=IABS(I1)
  GOTO 3
2 SIGNJ1=-1
  J1=IABS(J1)
  GOTO 4
5 ISWE=1
  RETURN
6 IA=0
  IB=1
  RETURN
7 IN=-IN
  CALL GCD(IN,K2,IA1,IB1)
  IA1=-IA1
  GOTO 8
  END
  SUBROUTINE GCD(I1,I2,J1,J2)
  IA=I1
  IB=I2
  IF(I1-I2) 3,2,1
1 IQ=I1/I2
  IR=I1-I2*IQ
  IF(IR.EQ.0) GOTO 4
  I1=I2
  I2=IR
  GOTO 1
4 J1=IA/I2
  J2=IB/I2
  RETURN
2 J1=1
  J2=1
  RETURN
3 I2=I1
  I1=IB
  GOTO 1
  END
```

UNCLASSIFIED

Appendix B

TABLE OF $C^{(1)}_{nm}$, $1 \le n \le m \le 9$

P= 1

C 1 1 =

1/	1	**	0	1
-1/	1	**	2	0

P= 1

C 1 2 =

1/	1	**	0	0	1
-2/	1	**	1	1	0
1/	1	**	3	0	0

P= 1

C 1 3 =

1/	1	**	0	0	0	1
-2/	1	**	1	0	1	0
-1/	1	**	0	2	0	0
3/	1	**	2	1	0	0
-1/	1	**	4	0	0	0

P= 1

C 1 4 =

1/	1	**	0	0	0	0	1
-2/	1	**	1	0	0	1	0
-2/	1	**	0	1	1	0	0
3/	1	**	2	0	1	0	0
3/	1	**	1	2	0	0	0
-4/	1	**	3	1	0	0	0
1/	1	**	5	0	0	0	0

P= 1

C 1 5 =

1/	1	**	0	0	0	0	0	1
-2/	1	**	1	0	0	0	1	0
-2/	1	**	0	1	0	1	0	0
-1/	1	**	0	0	2	0	0	0
3/	1	**	2	0	0	1	0	0
6/	1	**	1	1	1	0	0	0
1/	1	**	0	3	0	0	0	0
-4/	1	**	3	0	1	0	0	0
-6/	1	**	2	2	0	0	0	0
5/	1	**	4	1	0	0	0	0
-1/	1	**	6	0	0	0	0	0

P= 1

C 1 6 =

1/	1	**	0	0	0	0	0	0	1
-2/	1	**	1	0	0	0	0	1	0
-2/	1	**	0	1	0	0	1	0	0
-2/	1	**	0	0	1	1	0	0	0
3/	1	**	2	0	0	0	1	0	0
6/	1	**	1	1	0	1	0	0	0
3/	1	**	1	0	2	0	0	0	0
3/	1	**	0	2	1	0	0	0	0
-4/	1	**	3	0	0	1	0	0	0
-12/	1	**	2	1	1	0	0	0	0
-4/	1	**	1	3	0	0	0	0	0
5/	1	**	4	0	1	0	0	0	0
10/	1	**	3	2	0	0	0	0	0
-6/	1	**	5	1	0	0	0	0	0
1/	1	**	7	0	0	0	0	0	0

UNCLASSIFIED

P= 1

C 1 7 =

1/	1	**	0	0	0	0	0	0	0	1
-2/	1	**	1	0	0	0	0	0	1	0
-2/	1	**	0	1	0	0	0	1	0	0
-2/	1	**	0	0	1	0	1	0	0	0
-1/	1	**	0	0	0	2	0	0	0	0
3/	1	**	2	0	0	0	0	1	0	0
6/	1	**	1	1	0	0	1	0	0	0
6/	1	**	1	0	1	1	0	0	0	0
3/	1	**	0	2	0	1	0	0	0	0
3/	1	**	0	1	2	0	0	0	0	0
-4/	1	**	3	0	0	0	1	0	0	0
-12/	1	**	2	1	0	1	0	0	0	0
-6/	1	**	2	0	2	0	0	0	0	0
-12/	1	**	1	2	1	0	0	0	0	0
-1/	1	**	0	4	0	0	0	0	0	0
5/	1	**	4	0	0	1	0	0	0	0
20/	1	**	3	1	1	0	0	0	0	0
10/	1	**	2	3	0	0	0	0	0	0
-6/	1	**	5	0	1	0	0	0	0	0
-15/	1	**	4	2	0	0	0	0	0	0
7/	1	**	6	1	0	0	0	0	0	0
-1/	1	**	8	0	0	0	0	0	0	0

P= 1

C 1 8 =

1/	1	**	0	0	0	0	0	0	0	0	1
-2/	1	**	1	0	0	0	0	0	0	1	0
-2/	1	**	0	1	0	0	0	0	1	0	0
-2/	1	**	0	0	1	0	0	1	0	0	0
-2/	1	**	0	0	0	1	1	0	0	0	0
3/	1	**	2	0	0	0	0	0	1	0	0
6/	1	**	1	1	0	0	0	1	0	0	0
6/	1	**	1	0	1	0	1	0	0	0	0
3/	1	**	1	0	0	2	0	0	0	0	0
3/	1	**	0	2	0	0	1	0	0	0	0
6/	1	**	0	1	1	1	0	0	0	0	0
1/	1	**	0	0	3	0	0	0	0	0	0
-4/	1	**	3	0	0	0	0	1	0	0	0
-12/	1	**	2	1	0	0	1	0	0	0	0
-12/	1	**	2	0	1	1	0	0	0	0	0
-12/	1	**	1	2	0	1	0	0	0	0	0
-12/	1	**	1	1	2	0	0	0	0	0	0
-4/	1	**	0	3	1	0	0	0	0	0	0
5/	1	**	4	0	0	0	1	0	0	0	0
20/	1	**	3	1	0	1	0	0	0	0	0
10/	1	**	3	0	2	0	0	0	0	0	0
30/	1	**	2	2	1	0	0	0	0	0	0
5/	1	**	1	4	0	0	0	0	0	0	0
-6/	1	**	5	0	0	1	0	0	0	0	0
-30/	1	**	4	1	1	0	0	0	0	0	0
-20/	1	**	3	3	0	0	0	0	0	0	0
7/	1	**	6	0	1	0	0	0	0	0	0
21/	1	**	5	2	0	0	0	0	0	0	0
-8/	1	**	7	1	0	0	0	0	0	0	0
1/	1	**	9	0	0	0	0	0	0	0	0

UNCLASSIFIED

P= 1

C 1 9 =

1/	1	**	0	0	0	0	0	0	0	0	0	1
-2/	1	**	1	0	0	0	0	0	0	0	1	0
-2/	1	**	0	1	0	0	0	0	0	1	0	0
-2/	1	**	0	0	1	0	0	0	1	0	0	0
-2/	1	**	0	0	0	1	0	1	0	0	0	0
-1/	1	**	0	0	0	0	2	0	0	0	0	0
3/	1	**	2	0	0	0	0	0	0	1	0	0
6/	1	**	1	1	0	0	0	0	1	0	0	0
6/	1	**	1	0	1	0	0	1	0	0	0	0
6/	1	**	1	0	0	1	1	0	0	0	0	0
3/	1	**	0	2	0	0	0	1	0	0	0	0
6/	1	**	0	1	1	0	1	0	0	0	0	0
3/	1	**	0	1	0	2	0	0	0	0	0	0
3/	1	**	0	0	2	1	0	0	0	0	0	0
-4/	1	**	3	0	0	0	0	0	1	0	0	0
-12/	1	**	2	1	0	0	0	1	0	0	0	0
-12/	1	**	2	0	1	0	1	0	0	0	0	0
-6/	1	**	2	0	0	2	0	0	0	0	0	0
-12/	1	**	1	2	0	0	1	0	0	0	0	0
-24/	1	**	1	1	1	1	0	0	0	0	0	0
-4/	1	**	1	0	3	0	0	0	0	0	0	0
-4/	1	**	0	3	0	1	0	0	0	0	0	0
-6/	1	**	0	2	2	0	0	0	0	0	0	0
5/	1	**	4	0	0	0	0	1	0	0	0	0
20/	1	**	3	1	0	0	1	0	0	0	0	0
20/	1	**	3	0	1	1	0	0	0	0	0	0
30/	1	**	2	2	0	1	0	0	0	0	0	0
30/	1	**	2	1	2	0	0	0	0	0	0	0
20/	1	**	1	3	1	0	0	0	0	0	0	0
1/	1	**	0	5	0	0	0	0	0	0	0	0
-6/	1	**	5	0	0	0	1	0	0	0	0	0
-30/	1	**	4	1	0	1	0	0	0	0	0	0
-15/	1	**	4	0	2	0	0	0	0	0	0	0
-60/	1	**	3	2	1	0	0	0	0	0	0	0
-15/	1	**	2	4	0	0	0	0	0	0	0	0
7/	1	**	6	0	0	1	0	0	0	0	0	0
42/	1	**	5	1	1	0	0	0	0	0	0	0
35/	1	**	4	3	0	0	0	0	0	0	0	0
-8/	1	**	7	0	1	0	0	0	0	0	0	0
-28/	1	**	6	2	0	0	0	0	0	0	0	0
9/	1	**	8	1	0	0	0	0	0	0	0	0
-1/	1	**	10	0	0	0	0	0	0	0	0	0

P= 1

C 2 2 =

1/	1	**	0	0	0	1
-2/	1	**	1	0	1	0
-3/	2	**	0	2	0	0
4/	1	**	2	1	0	0
-3/	2	**	4	0	0	0

P= 1

C 2 3 =

1/	1	**	0	0	0	0	1
-2/	1	**	1	0	0	1	0
-3/	1	**	0	1	1	0	0
4/	1	**	2	0	1	0	0
5/	1	**	1	2	0	0	0
-7/	1	**	3	1	0	0	0
2/	1	**	5	0	0	0	0

P= 1

C 2 4 =

1/	1	**	0	0	0	0	0	1
-2/	1	**	1	0	0	0	1	0
-3/	1	**	0	1	0	1	0	0
-3/	2	**	0	0	2	0	0	0
4/	1	**	2	0	0	1	0	0
10/	1	**	1	1	1	0	0	0
2/	1	**	0	3	0	0	0	0
-7/	1	**	3	0	1	0	0	0
-12/	1	**	2	2	0	0	0	0
11/	1	**	4	1	0	0	0	0
-5/	2	**	6	0	0	0	0	0

UNCLASSIFIED

P= 1

C 2 5 =

1/	1	**	0	0	0	0	0	0	1
-2/	1	**	1	0	0	0	0	1	0
-3/	1	**	0	1	0	0	1	0	0
-3/	1	**	0	0	1	1	0	0	0
4/	1	**	2	0	0	0	1	0	0
10/	1	**	1	1	0	1	0	0	0
5/	1	**	1	0	2	0	0	0	0
6/	1	**	0	2	1	0	0	0	0
-7/	1	**	3	0	0	1	0	0	0
-24/	1	**	2	1	1	0	0	0	0
-9/	1	**	1	3	0	0	0	0	0
11/	1	**	4	0	1	0	0	0	0
24/	1	**	3	2	0	0	0	0	0
-16/	1	**	5	1	0	0	0	0	0
3/	1	**	7	0	0	0	0	0	0

P= 1

C 2 6 =

1/	1	**	0	0	0	0	0	0	0	1
-2/	1	**	1	0	0	0	0	0	1	0
-3/	1	**	0	1	0	0	0	1	0	0
-3/	1	**	0	0	1	0	1	0	0	0
-3/	2	**	0	0	0	2	0	0	0	0
4/	1	**	2	0	0	0	0	1	0	0
10/	1	**	1	1	0	0	1	0	0	0
10/	1	**	1	0	1	1	0	0	0	0
6/	1	**	0	2	0	1	0	0	0	0
6/	1	**	0	1	2	0	0	0	0	0
-7/	1	**	3	0	0	0	1	0	0	0
-24/	1	**	2	1	0	1	0	0	0	0
-12/	1	**	2	0	2	0	0	0	0	0
-27/	1	**	1	2	1	0	0	0	0	0
-5/	2	**	0	4	0	0	0	0	0	0
11/	1	**	4	0	0	1	0	0	0	0
48/	1	**	3	1	1	0	0	0	0	0
26/	1	**	2	3	0	0	0	0	0	0
-16/	1	**	5	0	1	0	0	0	0	0
-85/	2	**	4	2	0	0	0	0	0	0
22/	1	**	6	1	0	0	0	0	0	0
-7/	2	**	8	0	0	0	0	0	0	0

P= 1

C 2 7 =

1/	1	**	0	0	0	0	0	0	0	0	1
-2/	1	**	1	0	0	0	0	0	0	1	0
-3/	1	**	0	1	0	0	0	0	1	0	0
-3/	1	**	0	0	1	0	0	1	0	0	0
-3/	1	**	0	0	0	1	1	0	0	0	0
4/	1	**	2	0	0	0	0	0	1	0	0
10/	1	**	1	1	0	0	0	1	0	0	0
10/	1	**	1	0	1	0	1	0	0	0	0
5/	1	**	1	0	0	2	0	0	0	0	0
6/	1	**	0	2	0	0	1	0	0	0	0
12/	1	**	0	1	1	1	0	0	0	0	0
2/	1	**	0	0	3	0	0	0	0	0	0
-7/	1	**	3	0	0	0	0	1	0	0	0
-24/	1	**	2	1	0	0	1	0	0	0	0
-24/	1	**	2	0	1	1	0	0	0	0	0
-27/	1	**	1	2	0	1	0	0	0	0	0
-27/	1	**	1	1	2	0	0	0	0	0	0
-10/	1	**	0	3	1	0	0	0	0	0	0
11/	1	**	4	0	0	0	1	0	0	0	0
48/	1	**	3	1	0	1	0	0	0	0	0
24/	1	**	3	0	2	0	0	0	0	0	0
78/	1	**	2	2	1	0	0	0	0	0	0
14/	1	**	1	4	0	0	0	0	0	0	0
-16/	1	**	5	0	0	1	0	0	0	0	0
-85/	1	**	4	1	1	0	0	0	0	0	0
-60/	1	**	3	3	0	0	0	0	0	0	0
22/	1	**	6	0	1	0	0	0	0	0	0
69/	1	**	5	2	0	0	0	0	0	0	0
-29/	1	**	7	1	0	0	0	0	0	0	0
4/	1	**	9	0	0	0	0	0	0	0	0

UNCLASSIFIED

P= 1

C 2 8 =

1/	1	**	0	0	0	0	0	0	0	0	0	1
-2/	1	**	1	0	0	0	0	0	0	0	1	0
-3/	1	**	0	1	0	0	0	0	0	1	0	0
-3/	1	**	0	0	1	0	0	0	1	0	0	0
-3/	1	**	0	0	0	1	0	1	0	0	0	0
-3/	2	**	0	0	0	0	2	0	0	0	0	0
4/	1	**	2	0	0	0	0	0	0	1	0	0
10/	1	**	1	1	0	0	0	0	1	0	0	0
10/	1	**	1	0	1	0	0	1	0	0	0	0
10/	1	**	1	0	0	1	1	0	0	0	0	0
6/	1	**	0	2	0	0	0	1	0	0	0	0
12/	1	**	0	1	1	0	1	0	0	0	0	0
6/	1	**	0	1	0	2	0	0	0	0	0	0
6/	1	**	0	0	2	1	0	0	0	0	0	0
-7/	1	**	3	0	0	0	0	0	1	0	0	0
-24/	1	**	2	1	0	0	0	1	0	0	0	0
-24/	1	**	2	0	1	0	1	0	0	0	0	0
-12/	1	**	2	0	0	2	0	0	0	0	0	0
-27/	1	**	1	2	0	0	1	0	0	0	0	0
-54/	1	**	1	1	1	1	0	0	0	0	0	0
-9/	1	**	1	0	3	0	0	0	0	0	0	0
-10/	1	**	0	3	0	1	0	0	0	0	0	0
-15/	1	**	0	2	2	0	0	0	0	0	0	0
11/	1	**	4	0	0	0	0	1	0	0	0	0
48/	1	**	3	1	0	0	1	0	0	0	0	0
48/	1	**	3	0	1	1	0	0	0	0	0	0
78/	1	**	2	2	0	1	0	0	0	0	0	0
78/	1	**	2	1	2	0	0	0	0	0	0	0
56/	1	**	1	3	1	0	0	0	0	0	0	0
3/	1	**	0	5	0	0	0	0	0	0	0	0
-16/	1	**	5	0	0	0	1	0	0	0	0	0
-85/	1	**	4	1	0	1	0	0	0	0	0	0
-85/	2	**	4	0	2	0	0	0	0	0	0	0
-180/	1	**	3	2	1	0	0	0	0	0	0	0
-95/	2	**	2	4	0	0	0	0	0	0	0	0
22/	1	**	6	0	0	1	0	0	0	0	0	0
138/	1	**	5	1	1	0	0	0	0	0	0	0
120/	1	**	4	3	0	0	0	0	0	0	0	0
-29/	1	**	7	0	1	0	0	0	0	0	0	0
-105/	1	**	6	2	0	0	0	0	0	0	0	0
37/	1	**	8	1	0	0	0	0	0	0	0	0
-9/	2	**	10	0	0	0	0	0	0	0	0	0

P= 1

C 2 9 =

1/	1	**	0	0	0	0	0	0	0	0	0	0	1
-2/	1	**	1	0	0	0	0	0	0	0	0	1	0
-3/	1	**	0	1	0	0	0	0	0	0	1	0	0
-3/	1	**	0	0	1	0	0	0	0	1	0	0	0
-3/	1	**	0	0	0	1	0	0	1	0	0	0	0
-3/	1	**	0	0	0	0	1	1	0	0	0	0	0
4/	1	**	2	0	0	0	0	0	0	0	1	0	0
10/	1	**	1	1	0	0	0	0	0	1	0	0	0
10/	1	**	1	0	1	0	0	0	1	0	0	0	0
10/	1	**	1	0	0	1	0	1	0	0	0	0	0
5/	1	**	1	0	0	0	2	0	0	0	0	0	0
6/	1	**	0	2	0	0	0	0	1	0	0	0	0
12/	1	**	0	1	1	0	0	1	0	0	0	0	0
12/	1	**	0	1	0	1	1	0	0	0	0	0	0
6/	1	**	0	0	2	0	1	0	0	0	0	0	0
6/	1	**	0	0	1	2	0	0	0	0	0	0	0
-7/	1	**	3	0	0	0	0	0	0	1	0	0	0
-24/	1	**	2	1	0	0	0	0	1	0	0	0	0
-24/	1	**	2	0	1	0	0	1	0	0	0	0	0
-24/	1	**	2	0	0	1	1	0	0	0	0	0	0
-27/	1	**	1	2	0	0	0	1	0	0	0	0	0
-54/	1	**	1	1	1	0	1	0	0	0	0	0	0
-27/	1	**	1	1	0	2	0	0	0	0	0	0	0
-27/	1	**	1	0	2	1	0	0	0	0	0	0	0
-10/	1	**	0	3	0	0	1	0	0	0	0	0	0
-30/	1	**	0	2	1	1	0	0	0	0	0	0	0
-10/	1	**	0	1	3	0	0	0	0	0	0	0	0
11/	1	**	4	0	0	0	0	0	1	0	0	0	0
48/	1	**	3	1	0	0	0	1	0	0	0	0	0
48/	1	**	3	0	1	0	1	0	0	0	0	0	0
24/	1	**	3	0	0	2	0	0	0	0	0	0	0
78/	1	**	2	2	0	0	1	0	0	0	0	0	0
156/	1	**	2	1	1	1	0	0	0	0	0	0	0
26/	1	**	2	0	3	0	0	0	0	0	0	0	0
56/	1	**	1	3	0	1	0	0	0	0	0	0	0
84/	1	**	1	2	2	0	0	0	0	0	0	0	0
15/	1	**	0	4	1	0	0	0	0	0	0	0	0
-16/	1	**	5	0	0	0	0	1	0	0	0	0	0
-85/	1	**	4	1	0	0	1	0	0	0	0	0	0
-85/	1	**	4	0	1	1	0	0	0	0	0	0	0
-180/	1	**	3	2	0	1	0	0	0	0	0	0	0
-180/	1	**	3	1	2	0	0	0	0	0	0	0	0
-190/	1	**	2	3	1	0	0	0	0	0	0	0	0
-20/	1	**	1	5	0	0	0	0	0	0	0	0	0
22/	1	**	6	0	0	0	1	0	0	0	0	0	0
138/	1	**	5	1	0	1	0	0	0	0	0	0	0
69/	1	**	5	0	2	0	0	0	0	0	0	0	0
360/	1	**	4	2	1	0	0	0	0	0	0	0	0
125/	1	**	3	4	0	0	0	0	0	0	0	0	0
-29/	1	**	7	0	0	1	0	0	0	0	0	0	0
-210/	1	**	6	1	1	0	0	0	0	0	0	0	0
-217/	1	**	5	3	0	0	0	0	0	0	0	0	0
37/	1	**	8	0	1	0	0	0	0	0	0	0	0
152/	1	**	7	2	0	0	0	0	0	0	0	0	0
-46/	1	**	9	1	0	0	0	0	0	0	0	0	0
5/	1	**	11	0	0	0	0	0	0	0	0	0	0

UNCLASSIFIED

P= 1

C 3 3 =

1/	1	**	0	0	0	0	0	1
-2/	1	**	1	0	0	0	1	0
-3/	1	**	0	1	0	1	0	0
-2/	1	**	0	0	2	0	0	0
4/	1	**	2	0	0	1	0	0
12/	1	**	1	1	1	0	0	0
7/	3	**	0	3	0	0	0	0
-8/	1	**	3	0	1	0	0	0
-15/	1	**	2	2	0	0	0	0
14/	1	**	4	1	0	0	0	0
-10/	3	**	6	0	0	0	0	0

P= 1

C 3 4 =

1/	1	**	0	0	0	0	0	0	1
-2/	1	**	1	0	0	0	0	1	0
-3/	1	**	0	1	0	0	1	0	0
-4/	1	**	0	0	1	1	0	0	0
4/	1	**	2	0	0	0	1	0	0
12/	1	**	1	1	0	1	0	0	0
7/	1	**	1	0	2	0	0	0	0
8/	1	**	0	2	1	0	0	0	0
-8/	1	**	3	0	0	1	0	0	0
-33/	1	**	2	1	1	0	0	0	0
-13/	1	**	1	3	0	0	0	0	0
15/	1	**	4	0	1	0	0	0	0
36/	1	**	3	2	0	0	0	0	0
-25/	1	**	5	1	0	0	0	0	0
5/	1	**	7	0	0	0	0	0	0

P= 1

C 3 5 =

1/	1	**	0	0	0	0	0	0	0	1
-2/	1	**	1	0	0	0	0	0	1	0
-3/	1	**	0	1	0	0	0	1	0	0
-4/	1	**	0	0	1	0	1	0	0	0
-2/	1	**	0	0	0	2	0	0	0	0
4/	1	**	2	0	0	0	0	1	0	0
12/	1	**	1	1	0	0	1	0	0	0
14/	1	**	1	0	1	1	0	0	0	0
8/	1	**	0	2	0	1	0	0	0	0
9/	1	**	0	1	2	0	0	0	0	0
-8/	1	**	3	0	0	0	1	0	0	0
-33/	1	**	2	1	0	1	0	0	0	0
-18/	1	**	2	0	2	0	0	0	0	0
-42/	1	**	1	2	1	0	0	0	0	0
-4/	1	**	0	4	0	0	0	0	0	0
15/	1	**	4	0	0	1	0	0	0	0
76/	1	**	3	1	1	0	0	0	0	0
44/	1	**	2	3	0	0	0	0	0	0
-26/	1	**	5	0	1	0	0	0	0	0
-75/	1	**	4	2	0	0	0	0	0	0
41/	1	**	6	1	0	0	0	0	0	0
-7/	1	**	8	0	0	0	0	0	0	0

UNCLASSIFIED

P= 1

C 3 6 =

1/	1	**	0	0	0	0	0	0	0	0	1
-2/	1	**	1	0	0	0	0	0	0	1	0
-3/	1	**	0	1	0	0	0	0	1	0	0
-4/	1	**	0	0	1	0	0	1	0	0	0
-4/	1	**	0	0	0	1	1	0	0	0	0
4/	1	**	2	0	0	0	0	0	1	0	0
12/	1	**	1	1	0	0	0	1	0	0	0
14/	1	**	1	0	1	0	1	0	0	0	0
7/	1	**	1	0	0	2	0	0	0	0	0
8/	1	**	0	2	0	0	1	0	0	0	0
18/	1	**	0	1	1	1	0	0	0	0	0
10/	3	**	0	0	3	0	0	0	0	0	0
-8/	1	**	3	0	0	0	0	1	0	0	0
-33/	1	**	2	1	0	0	1	0	0	0	0
-36/	1	**	2	0	1	1	0	0	0	0	0
-42/	1	**	1	2	0	1	0	0	0	0	0
-45/	1	**	1	1	2	0	0	0	0	0	0
-17/	1	**	0	3	1	0	0	0	0	0	0
15/	1	**	4	0	0	0	1	0	0	0	0
76/	1	**	3	1	0	1	0	0	0	0	0
40/	1	**	3	0	2	0	0	0	0	0	0
138/	1	**	2	2	1	0	0	0	0	0	0
26/	1	**	1	4	0	0	0	0	0	0	0
-26/	1	**	5	0	0	1	0	0	0	0	0
-155/	1	**	4	1	1	0	0	0	0	0	0
-350/	3	**	3	3	0	0	0	0	0	0	0
42/	1	**	6	0	1	0	0	0	0	0	0
141/	1	**	5	2	0	0	0	0	0	0	0
-63/	1	**	7	1	0	0	0	0	0	0	0
28/	3	**	9	0	0	0	0	0	0	0	0

P= 1

C 3 7 =

1/	1	**	0	0	0	0	0	0	0	0	0	1
-2/	1	**	1	0	0	0	0	0	0	0	1	0
-3/	1	**	0	1	0	0	0	0	0	1	0	0
-4/	1	**	0	0	1	0	0	0	1	0	0	0
-4/	1	**	0	0	0	1	0	1	0	0	0	0
-2/	1	**	0	0	0	0	2	0	0	0	0	0
4/	1	**	2	0	0	0	0	0	0	1	0	0
12/	1	**	1	1	0	0	0	0	1	0	0	0
14/	1	**	1	0	1	0	0	1	0	0	0	0
14/	1	**	1	0	0	1	1	0	0	0	0	0
8/	1	**	0	2	0	0	0	1	0	0	0	0
18/	1	**	0	1	1	0	1	0	0	0	0	0
9/	1	**	0	1	0	2	0	0	0	0	0	0
10/	1	**	0	0	2	1	0	0	0	0	0	0
-8/	1	**	3	0	0	0	0	0	1	0	0	0
-33/	1	**	2	1	0	0	0	1	0	0	0	0
-36/	1	**	2	0	1	0	1	0	0	0	0	0
-18/	1	**	2	0	0	2	0	0	0	0	0	0
-42/	1	**	1	2	0	0	1	0	0	0	0	0
-90/	1	**	1	1	1	1	0	0	0	0	0	0
-16/	1	**	1	0	3	0	0	0	0	0	0	0
-17/	1	**	0	3	0	1	0	0	0	0	0	0
-27/	1	**	0	2	2	0	0	0	0	0	0	0
15/	1	**	4	0	0	0	0	1	0	0	0	0
76/	1	**	3	1	0	0	1	0	0	0	0	0
80/	1	**	3	0	1	1	0	0	0	0	0	0
138/	1	**	2	2	0	1	0	0	0	0	0	0
144/	1	**	2	1	2	0	0	0	0	0	0	0
108/	1	**	1	3	1	0	0	0	0	0	0	0
6/	1	**	0	5	0	0	0	0	0	0	0	0
-26/	1	**	5	0	0	0	1	0	0	0	0	0
-155/	1	**	4	1	0	1	0	0	0	0	0	0
-80/	1	**	4	0	2	0	0	0	0	0	0	0
-360/	1	**	3	2	1	0	0	0	0	0	0	0
-100/	1	**	2	4	0	0	0	0	0	0	0	0
42/	1	**	6	0	0	1	0	0	0	0	0	0
288/	1	**	5	1	1	0	0	0	0	0	0	0
265/	1	**	4	3	0	0	0	0	0	0	0	0
-64/	1	**	7	0	1	0	0	0	0	0	0	0
-245/	1	**	6	2	0	0	0	0	0	0	0	0
92/	1	**	8	1	0	0	0	0	0	0	0	0
-12/	1	**	10	0	0	0	0	0	0	0	0	0

UNCLASSIFIED

P= 1

C 3 8 =

1/	1	**	0	0	0	0	0	0	0	0	0	0	1
-2/	1	**	1	0	0	0	0	0	0	0	0	1	0
-3/	1	**	0	1	0	0	0	0	0	0	1	0	0
-4/	1	**	0	0	1	0	0	0	0	1	0	0	0
-4/	1	**	0	0	0	1	0	0	1	0	0	0	0
-4/	1	**	0	0	0	0	1	1	0	0	0	0	0
4/	1	**	2	0	0	0	0	0	0	0	1	0	0
12/	1	**	1	1	0	0	0	0	0	1	0	0	0
14/	1	**	1	0	1	0	0	0	1	0	0	0	0
14/	1	**	1	0	0	1	0	1	0	0	0	0	0
7/	1	**	1	0	0	0	2	0	0	0	0	0	0
8/	1	**	0	2	0	0	0	0	1	0	0	0	0
18/	1	**	0	1	1	0	0	1	0	0	0	0	0
18/	1	**	0	1	0	1	1	0	0	0	0	0	0
10/	1	**	0	0	2	0	1	0	0	0	0	0	0
10/	1	**	0	0	1	2	0	0	0	0	0	0	0
-8/	1	**	3	0	0	0	0	0	0	1	0	0	0
-33/	1	**	2	1	0	0	0	0	1	0	0	0	0
-36/	1	**	2	0	1	0	0	1	0	0	0	0	0
-36/	1	**	2	0	0	1	1	0	0	0	0	0	0
-42/	1	**	1	2	0	0	0	1	0	0	0	0	0
-90/	1	**	1	1	1	0	1	0	0	0	0	0	0
-45/	1	**	1	1	0	2	0	0	0	0	0	0	0
-48/	1	**	1	0	2	1	0	0	0	0	0	0	0
-17/	1	**	0	3	0	0	1	0	0	0	0	0	0
-54/	1	**	0	2	1	1	0	0	0	0	0	0	0
-19/	1	**	0	1	3	0	0	0	0	0	0	0	0
15/	1	**	4	0	0	0	0	0	1	0	0	0	0
76/	1	**	3	1	0	0	0	1	0	0	0	0	0
80/	1	**	3	0	1	0	1	0	0	0	0	0	0
40/	1	**	3	0	0	2	0	0	0	0	0	0	0
138/	1	**	2	2	0	0	1	0	0	0	0	0	0
288/	1	**	2	1	1	1	0	0	0	0	0	0	0
50/	1	**	2	0	3	0	0	0	0	0	0	0	0
108/	1	**	1	3	0	1	0	0	0	0	0	0	0
168/	1	**	1	2	2	0	0	0	0	0	0	0	0
31/	1	**	0	4	1	0	0	0	0	0	0	0	0
-26/	1	**	5	0	0	0	0	1	0	0	0	0	0
-155/	1	**	4	1	0	0	1	0	0	0	0	0	0
-160/	1	**	4	0	1	1	0	0	0	0	0	0	0
-360/	1	**	3	2	0	1	0	0	0	0	0	0	0
-370/	1	**	3	1	2	0	0	0	0	0	0	0	0
-410/	1	**	2	3	1	0	0	0	0	0	0	0	0
-45/	1	**	1	5	0	0	0	0	0	0	0	0	0
42/	1	**	6	0	0	0	1	0	0	0	0	0	0
288/	1	**	5	1	0	1	0	0	0	0	0	0	0
147/	1	**	5	0	2	0	0	0	0	0	0	0	0
810/	1	**	4	2	1	0	0	0	0	0	0	0	0
295/	1	**	3	4	0	0	0	0	0	0	0	0	0
-64/	1	**	7	0	0	1	0	0	0	0	0	0	0
-497/	1	**	6	1	1	0	0	0	0	0	0	0	0
-539/	1	**	5	3	0	0	0	0	0	0	0	0	0
93/	1	**	8	0	1	0	0	0	0	0	0	0	0
400/	1	**	7	2	0	0	0	0	0	0	0	0	0
-129/	1	**	9	1	0	0	0	0	0	0	0	0	0
15/	1	**	11	0	0	0	0	0	0	0	0	0	0

P= 1

C 3 9 =

1/	1	**	0	0	0	0	0	0	0	0	0	0	0	1
-2/	1	**	1	0	0	0	0	0	0	0	0	0	1	0
-3/	1	**	0	1	0	0	0	0	0	0	0	1	0	0
-4/	1	**	0	0	1	0	0	0	0	0	1	0	0	0
-4/	1	**	0	0	0	1	0	0	0	1	0	0	0	0
-4/	1	**	0	0	0	0	1	0	1	0	0	0	0	0
-2/	1	**	0	0	0	0	0	2	0	0	0	0	0	0
4/	1	**	2	0	0	0	0	0	0	0	0	1	0	0
12/	1	**	1	1	0	0	0	0	0	0	1	0	0	0
14/	1	**	1	0	1	0	0	0	0	1	0	0	0	0
14/	1	**	1	0	0	1	0	0	1	0	0	0	0	0
14/	1	**	1	0	0	0	1	1	0	0	0	0	0	0
8/	1	**	0	2	0	0	0	0	0	1	0	0	0	0
18/	1	**	0	1	1	0	0	0	1	0	0	0	0	0
18/	1	**	0	1	0	1	0	1	0	0	0	0	0	0
9/	1	**	0	1	0	0	2	0	0	0	0	0	0	0
10/	1	**	0	0	2	0	0	1	0	0	0	0	0	0
20/	1	**	0	0	1	1	1	0	0	0	0	0	0	0
10/	3	**	0	0	0	3	0	0	0	0	0	0	0	0
-8/	1	**	3	0	0	0	0	0	0	0	1	0	0	0
-33/	1	**	2	1	0	0	0	0	0	1	0	0	0	0
-36/	1	**	2	0	1	0	0	0	1	0	0	0	0	0
-36/	1	**	2	0	0	1	0	1	0	0	0	0	0	0
-18/	1	**	2	0	0	0	2	0	0	0	0	0	0	0
-42/	1	**	1	2	0	0	0	0	1	0	0	0	0	0
-90/	1	**	1	1	1	0	0	1	0	0	0	0	0	0
-90/	1	**	1	1	0	1	1	0	0	0	0	0	0	0
-48/	1	**	1	0	2	0	1	0	0	0	0	0	0	0
-48/	1	**	1	0	1	2	0	0	0	0	0	0	0	0
-17/	1	**	0	3	0	0	0	1	0	0	0	0	0	0
-54/	1	**	0	2	1	0	1	0	0	0	0	0	0	0
-27/	1	**	0	2	0	2	0	0	0	0	0	0	0	0
-57/	1	**	0	1	2	1	0	0	0	0	0	0	0	0
-5/	1	**	0	0	4	0	0	0	0	0	0	0	0	0
15/	1	**	4	0	0	0	0	0	0	1	0	0	0	0
76/	1	**	3	1	0	0	0	0	1	0	0	0	0	0
80/	1	**	3	0	1	0	0	1	0	0	0	0	0	0
80/	1	**	3	0	0	1	1	0	0	0	0	0	0	0
138/	1	**	2	2	0	0	0	1	0	0	0	0	0	0
288/	1	**	2	1	1	0	1	0	0	0	0	0	0	0
144/	1	**	2	1	0	2	0	0	0	0	0	0	0	0
150/	1	**	2	0	2	1	0	0	0	0	0	0	0	0
108/	1	**	1	3	0	0	1	0	0	0	0	0	0	0
336/	1	**	1	2	1	1	0	0	0	0	0	0	0	0
116/	1	**	1	1	3	0	0	0	0	0	0	0	0	0
31/	1	**	0	4	0	1	0	0	0	0	0	0	0	0
64/	1	**	0	3	2	0	0	0	0	0	0	0	0	0
-26/	1	**	5	0	0	0	0	0	1	0	0	0	0	0
-155/	1	**	4	1	0	0	0	1	0	0	0	0	0	0
-160/	1	**	4	0	1	0	1	0	0	0	0	0	0	0
-80/	1	**	4	0	0	2	0	0	0	0	0	0	0	0
-360/	1	**	3	2	0	0	1	0	0	0	0	0	0	0
-740/	1	**	3	1	1	1	0	0	0	0	0	0	0	0
-380/	3	**	3	0	3	0	0	0	0	0	0	0	0	0
-410/	1	**	2	3	0	1	0	0	0	0	0	0	0	0
-630/	1	**	2	2	2	0	0	0	0	0	0	0	0	0
-230/	1	**	1	4	1	0	0	0	0	0	0	0	0	0
-25/	3	**	0	6	0	0	0	0	0	0	0	0	0	0

UNCLASSIFIED

42/	1	**	6	0	0	0	0	1	0	0	0	0	0	0
288/	1	**	5	1	0	0	1	0	0	0	0	0	0	0
294/	1	**	5	0	1	1	0	0	0	0	0	0	0	0
810/	1	**	4	2	0	1	0	0	0	0	0	0	0	0
825/	1	**	4	1	2	0	0	0	0	0	0	0	0	0
1200/	1	**	3	3	1	0	0	0	0	0	0	0	0	0
195/	1	**	2	5	0	0	0	0	0	0	0	0	0	0
-64/	1	**	7	0	0	0	1	0	0	0	0	0	0	0
-497/	1	**	6	1	0	1	0	0	0	0	0	0	0	0
-252/	1	**	6	0	2	0	0	0	0	0	0	0	0	0
-1638/	1	**	5	2	1	0	0	0	0	0	0	0	0	0
-735/	1	**	4	4	0	0	0	0	0	0	0	0	0	0
93/	1	**	8	0	0	1	0	0	0	0	0	0	0	0
808/	1	**	7	1	1	0	0	0	0	0	0	0	0	0
1008/	1	**	6	3	0	0	0	0	0	0	0	0	0	0
-130/	1	**	9	0	1	0	0	0	0	0	0	0	0	0
-621/	1	**	8	2	0	0	0	0	0	0	0	0	0	0
175/	1	**	10	1	0	0	0	0	0	0	0	0	0	0
-55/	3	**	12	0	0	0	0	0	0	0	0	0	0	0

P= 1

C 4 4 =

1/	1	**	0	0	0	0	0	0	0	1
-2/	1	**	1	0	0	0	0	0	1	0
-3/	1	**	0	1	0	0	0	1	0	0
-4/	1	**	0	0	1	0	1	0	0	0
-5/	2	**	0	0	0	2	0	0	0	0
4/	1	**	2	0	0	0	0	1	0	0
12/	1	**	1	1	0	0	1	0	0	0
16/	1	**	1	0	1	1	0	0	0	0
9/	1	**	0	2	0	1	0	0	0	0
10/	1	**	0	1	2	0	0	0	0	0
-8/	1	**	3	0	0	0	1	0	0	0
-36/	1	**	2	1	0	1	0	0	0	0
-21/	1	**	2	0	2	0	0	0	0	0
-48/	1	**	1	2	1	0	0	0	0	0
-19/	4	**	0	4	0	0	0	0	0	0
16/	1	**	4	0	0	1	0	0	0	0
88/	1	**	3	1	1	0	0	0	0	0
52/	1	**	2	3	0	0	0	0	0	0
-30/	1	**	5	0	1	0	0	0	0	0
-90/	1	**	4	2	0	0	0	0	0	0
50/	1	**	6	1	0	0	0	0	0	0
-35/	4	**	8	0	0	0	0	0	0	0

P= 1

C 4 5 =

1/	1	**	0	0	0	0	0	0	0	0	1
-2/	1	**	1	0	0	0	0	0	0	1	0
-3/	1	**	0	1	0	0	0	0	1	0	0
-4/	1	**	0	0	1	0	0	1	0	0	0
-5/	1	**	0	0	0	1	1	0	0	0	0
4/	1	**	2	0	0	0	0	0	1	0	0
12/	1	**	1	1	0	0	0	1	0	0	0
16/	1	**	1	0	1	0	1	0	0	0	0
9/	1	**	1	0	0	2	0	0	0	0	0
9/	1	**	0	2	0	0	1	0	0	0	0
22/	1	**	0	1	1	1	0	0	0	0	0
4/	1	**	0	0	3	0	0	0	0	0	0
-8/	1	**	3	0	0	0	0	1	0	0	0
-36/	1	**	2	1	0	0	1	0	0	0	0
-45/	1	**	2	0	1	1	0	0	0	0	0
-51/	1	**	1	2	0	1	0	0	0	0	0
-57/	1	**	1	1	2	0	0	0	0	0	0
-22/	1	**	0	3	1	0	0	0	0	0	0
16/	1	**	4	0	0	0	1	0	0	0	0
92/	1	**	3	1	0	1	0	0	0	0	0
52/	1	**	3	0	2	0	0	0	0	0	0
180/	1	**	2	2	1	0	0	0	0	0	0
35/	1	**	1	4	0	0	0	0	0	0	0
-31/	1	**	5	0	0	1	0	0	0	0	0
-205/	1	**	4	1	1	0	0	0	0	0	0
-160/	1	**	3	3	0	0	0	0	0	0	0
56/	1	**	6	0	1	0	0	0	0	0	0
198/	1	**	5	2	0	0	0	0	0	0	0
-91/	1	**	7	1	0	0	0	0	0	0	0
14/	1	**	9	0	0	0	0	0	0	0	0

UNCLASSIFIED

P= 1

C 4 6 =

1/	1	**	0	0	0	0	0	0	0	0	0	1
-2/	1	**	1	0	0	0	0	0	0	0	1	0
-3/	1	**	0	1	0	0	0	0	0	1	0	0
-4/	1	**	0	0	1	0	0	0	1	0	0	0
-5/	1	**	0	0	0	1	0	1	0	0	0	0
-5/	2	**	0	0	0	0	2	0	0	0	0	0
4/	1	**	2	0	0	0	0	0	0	1	0	0
12/	1	**	1	1	0	0	0	0	1	0	0	0
16/	1	**	1	0	1	0	0	1	0	0	0	0
18/	1	**	1	0	0	1	1	0	0	0	0	0
9/	1	**	0	2	0	0	0	1	0	0	0	0
22/	1	**	0	1	1	0	1	0	0	0	0	0
12/	1	**	0	1	0	2	0	0	0	0	0	0
13/	1	**	0	0	2	1	0	0	0	0	0	0
-8/	1	**	3	0	0	0	0	0	1	0	0	0
-36/	1	**	2	1	0	0	0	1	0	0	0	0
-45/	1	**	2	0	1	0	1	0	0	0	0	0
-24/	1	**	2	0	0	2	0	0	0	0	0	0
-51/	1	**	1	2	0	0	1	0	0	0	0	0
-120/	1	**	1	1	1	1	0	0	0	0	0	0
-22/	1	**	1	0	3	0	0	0	0	0	0	0
-23/	1	**	0	3	0	1	0	0	0	0	0	0
-75/	2	**	0	2	2	0	0	0	0	0	0	0
16/	1	**	4	0	0	0	0	1	0	0	0	0
92/	1	**	3	1	0	0	1	0	0	0	0	0
108/	1	**	3	0	1	1	0	0	0	0	0	0
186/	1	**	2	2	0	1	0	0	0	0	0	0
204/	1	**	2	1	2	0	0	0	0	0	0	0
156/	1	**	1	3	1	0	0	0	0	0	0	0
9/	1	**	0	5	0	0	0	0	0	0	0	0
-31/	1	**	5	0	0	0	1	0	0	0	0	0
-210/	1	**	4	1	0	1	0	0	0	0	0	0
-115/	1	**	4	0	2	0	0	0	0	0	0	0
-530/	1	**	3	2	1	0	0	0	0	0	0	0
-305/	2	**	2	4	0	0	0	0	0	0	0	0
57/	1	**	6	0	0	1	0	0	0	0	0	0
432/	1	**	5	1	1	0	0	0	0	0	0	0
415/	1	**	4	3	0	0	0	0	0	0	0	0
-98/	1	**	7	0	1	0	0	0	0	0	0	0
-791/	2	**	6	2	0	0	0	0	0	0	0	0
154/	1	**	8	1	0	0	0	0	0	0	0	0
-21/	1	**	10	0	0	0	0	0	0	0	0	0

P= 1

C 4 7 =

1/	1	**	0	0	0	0	0	0	0	0	0	0	1
-2/	1	**	1	0	0	0	0	0	0	0	0	1	0
-3/	1	**	0	1	0	0	0	0	0	0	1	0	0
-4/	1	**	0	0	1	0	0	0	0	1	0	0	0
-5/	1	**	0	0	0	1	0	0	1	0	0	0	0
-5/	1	**	0	0	0	0	1	1	0	0	0	0	0
4/	1	**	2	0	0	0	0	0	0	0	1	0	0
12/	1	**	1	1	0	0	0	0	0	1	0	0	0
16/	1	**	1	0	1	0	0	0	1	0	0	0	0
18/	1	**	1	0	0	1	0	1	0	0	0	0	0
9/	1	**	1	0	0	0	2	0	0	0	0	0	0
9/	1	**	0	2	0	0	0	0	1	0	0	0	0
22/	1	**	0	1	1	0	0	1	0	0	0	0	0
24/	1	**	0	1	0	1	1	0	0	0	0	0	0
13/	1	**	0	0	2	0	1	0	0	0	0	0	0
14/	1	**	0	0	1	2	0	0	0	0	0	0	0
-8/	1	**	3	0	0	0	0	0	0	1	0	0	0
-36/	1	**	2	1	0	0	0	0	1	0	0	0	0
-45/	1	**	2	0	1	0	0	1	0	0	0	0	0
-48/	1	**	2	0	0	1	1	0	0	0	0	0	0
-51/	1	**	1	2	0	0	0	1	0	0	0	0	0
-120/	1	**	1	1	1	0	1	0	0	0	0	0	0
-63/	1	**	1	1	0	2	0	0	0	0	0	0	0
-69/	1	**	1	0	2	1	0	0	0	0	0	0	0
-23/	1	**	0	3	0	0	1	0	0	0	0	0	0
-78/	1	**	0	2	1	1	0	0	0	0	0	0	0
-28/	1	**	0	1	3	0	0	0	0	0	0	0	0
16/	1	**	4	0	0	0	0	0	1	0	0	0	0
92/	1	**	3	1	0	0	0	1	0	0	0	0	0
108/	1	**	3	0	1	0	1	0	0	0	0	0	0
56/	1	**	3	0	0	2	0	0	0	0	0	0	0
186/	1	**	2	2	0	0	1	0	0	0	0	0	0
420/	1	**	2	1	1	1	0	0	0	0	0	0	0
76/	1	**	2	0	3	0	0	0	0	0	0	0	0
160/	1	**	1	3	0	1	0	0	0	0	0	0	0
258/	1	**	1	2	2	0	0	0	0	0	0	0	0
49/	1	**	0	4	1	0	0	0	0	0	0	0	0
-31/	1	**	5	0	0	0	0	1	0	0	0	0	0
-210/	1	**	4	1	0	0	1	0	0	0	0	0	0
-235/	1	**	4	0	1	1	0	0	0	0	0	0	0
-540/	1	**	3	2	0	1	0	0	0	0	0	0	0
-580/	1	**	3	1	2	0	0	0	0	0	0	0	0
-660/	1	**	2	3	1	0	0	0	0	0	0	0	0
-75/	1	**	1	5	0	0	0	0	0	0	0	0	0
57/	1	**	6	0	0	0	1	0	0	0	0	0	0
438/	1	**	5	1	0	1	0	0	0	0	0	0	0
234/	1	**	5	0	2	0	0	0	0	0	0	0	0
1335/	1	**	4	2	1	0	0	0	0	0	0	0	0
505/	1	**	3	4	0	0	0	0	0	0	0	0	0
-99/	1	**	7	0	0	1	0	0	0	0	0	0	0
-840/	1	**	6	1	1	0	0	0	0	0	0	0	0
-952/	1	**	5	3	0	0	0	0	0	0	0	0	0
162/	1	**	8	0	1	0	0	0	0	0	0	0	0
732/	1	**	7	2	0	0	0	0	0	0	0	0	0
-246/	1	**	9	1	0	0	0	0	0	0	0	0	0
30/	1	**	11	0	0	0	0	0	0	0	0	0	0

UNCLASSIFIED

P= 1

C 4 8 =

1/	1	**	0	0	0	0	0	0	0	0	0	0	0	1
-2/	1	**	1	0	0	0	0	0	0	0	0	0	1	0
-3/	1	**	0	1	0	0	0	0	0	0	0	1	0	0
-4/	1	**	0	0	1	0	0	0	0	0	1	0	0	0
-5/	1	**	0	0	0	1	0	0	0	1	0	0	0	0
-5/	1	**	0	0	0	0	1	0	1	0	0	0	0	0
-5/	2	**	0	0	0	0	0	2	0	0	0	0	0	0
4/	1	**	2	0	0	0	0	0	0	0	0	1	0	0
12/	1	**	1	1	0	0	0	0	0	0	1	0	0	0
16/	1	**	1	0	1	0	0	0	0	1	0	0	0	0
18/	1	**	1	0	0	1	0	0	1	0	0	0	0	0
18/	1	**	1	0	0	0	1	1	0	0	0	0	0	0
9/	1	**	0	2	0	0	0	0	0	1	0	0	0	0
22/	1	**	0	1	1	0	0	0	1	0	0	0	0	0
24/	1	**	0	1	0	1	0	1	0	0	0	0	0	0
12/	1	**	0	1	0	0	2	0	0	0	0	0	0	0
13/	1	**	0	0	2	0	0	1	0	0	0	0	0	0
28/	1	**	0	0	1	1	1	0	0	0	0	0	0	0
5/	1	**	0	0	0	3	0	0	0	0	0	0	0	0
-8/	1	**	3	0	0	0	0	0	0	0	1	0	0	0
-36/	1	**	2	1	0	0	0	0	0	1	0	0	0	0
-45/	1	**	2	0	1	0	0	0	1	0	0	0	0	0
-48/	1	**	2	0	0	1	0	1	0	0	0	0	0	0
-24/	1	**	2	0	0	0	2	0	0	0	0	0	0	0
-51/	1	**	1	2	0	0	0	0	1	0	0	0	0	0
-120/	1	**	1	1	1	0	0	1	0	0	0	0	0	0
-126/	1	**	1	1	0	1	1	0	0	0	0	0	0	0
-69/	1	**	1	0	2	0	1	0	0	0	0	0	0	0
-72/	1	**	1	0	1	2	0	0	0	0	0	0	0	0
-23/	1	**	0	3	0	0	0	1	0	0	0	0	0	0
-78/	1	**	0	2	1	0	1	0	0	0	0	0	0	0
-81/	2	**	0	2	0	2	0	0	0	0	0	0	0	0
-87/	1	**	0	1	2	1	0	0	0	0	0	0	0	0
-31/	4	**	0	0	4	0	0	0	0	0	0	0	0	0
16/	1	**	4	0	0	0	0	0	0	1	0	0	0	0
92/	1	**	3	1	0	0	0	0	1	0	0	0	0	0
108/	1	**	3	0	1	0	0	1	0	0	0	0	0	0
112/	1	**	3	0	0	1	1	0	0	0	0	0	0	0
186/	1	**	2	2	0	0	0	1	0	0	0	0	0	0
420/	1	**	2	1	1	0	1	0	0	0	0	0	0	0
216/	1	**	2	1	0	2	0	0	0	0	0	0	0	0
234/	1	**	2	0	2	1	0	0	0	0	0	0	0	0
160/	1	**	1	3	0	0	1	0	0	0	0	0	0	0
528/	1	**	1	2	1	1	0	0	0	0	0	0	0	0
188/	1	**	1	1	3	0	0	0	0	0	0	0	0	0
50/	1	**	0	4	0	1	0	0	0	0	0	0	0	0
106/	1	**	0	3	2	0	0	0	0	0	0	0	0	0
-31/	1	**	5	0	0	0	0	0	1	0	0	0	0	0
-210/	1	**	4	1	0	0	0	1	0	0	0	0	0	0
-235/	1	**	4	0	1	0	1	0	0	0	0	0	0	0
-120/	1	**	4	0	0	2	0	0	0	0	0	0	0	0
-540/	1	**	3	2	0	0	1	0	0	0	0	0	0	0
-1180/	1	**	3	1	1	1	0	0	0	0	0	0	0	0
-210/	1	**	3	0	3	0	0	0	0	0	0	0	0	0
-670/	1	**	2	3	0	1	0	0	0	0	0	0	0	0
-1065/	1	**	2	2	2	0	0	0	0	0	0	0	0	0
-400/	1	**	1	4	1	0	0	0	0	0	0	0	0	0
-15/	1	**	0	6	0	0	0	0	0	0	0	0	0	0
57/	1	**	6	0	0	0	0	1	0	0	0	0	0	0

438/	1	**	5	1	0	0	1	0	0	0	0	0	0	0
474/	1	**	5	0	1	1	0	0	0	0	0	0	0	0
1350/	1	**	4	2	0	1	0	0	0	0	0	0	0	0
1425/	1	**	4	1	2	0	0	0	0	0	0	0	0	0
2140/	1	**	3	3	1	0	0	0	0	0	0	0	0	0
360/	1	**	2	5	0	0	0	0	0	0	0	0	0	0
-99/	1	**	7	0	0	0	1	0	0	0	0	0	0	0
-847/	1	**	6	1	0	1	0	0	0	0	0	0	0	0
-889/	2	**	6	0	2	0	0	0	0	0	0	0	0	0
-3003/	1	**	5	2	1	0	0	0	0	0	0	0	0	0
-1400/	1	**	4	4	0	0	0	0	0	0	0	0	0	0
163/	1	**	8	0	0	1	0	0	0	0	0	0	0	0
1528/	1	**	7	1	1	0	0	0	0	0	0	0	0	0
1988/	1	**	6	3	0	0	0	0	0	0	0	0	0	0
-255/	1	**	9	0	1	0	0	0	0	0	0	0	0	0
-2547/	2	**	8	2	0	0	0	0	0	0	0	0	0	0
375/	1	**	10	1	0	0	0	0	0	0	0	0	0	0
-165/	4	**	12	0	0	0	0	0	0	0	0	0	0	0

P= 1

C 4 9 =

1/	1	**	0	0	0	0	0	0	0	0	0	0	0	0	1
-2/	1	**	1	0	0	0	0	0	0	0	0	0	0	1	0
-3/	1	**	0	1	0	0	0	0	0	0	0	0	1	0	0
-4/	1	**	0	0	1	0	0	0	0	0	0	1	0	0	0
-5/	1	**	0	0	0	1	0	0	0	0	1	0	0	0	0
-5/	1	**	0	0	0	0	1	0	0	1	0	0	0	0	0
-5/	1	**	0	0	0	0	0	1	1	0	0	0	0	0	0
4/	1	**	2	0	0	0	0	0	0	0	0	0	1	0	0
12/	1	**	1	1	0	0	0	0	0	0	0	1	0	0	0
16/	1	**	1	0	1	0	0	0	0	0	1	0	0	0	0
18/	1	**	1	0	0	1	0	0	0	1	0	0	0	0	0
18/	1	**	1	0	0	0	1	0	1	0	0	0	0	0	0
9/	1	**	1	0	0	0	0	2	0	0	0	0	0	0	0
9/	1	**	0	2	0	0	0	0	0	0	1	0	0	0	0
22/	1	**	0	1	1	0	0	0	0	1	0	0	0	0	0
24/	1	**	0	1	0	1	0	0	1	0	0	0	0	0	0
24/	1	**	0	1	0	0	1	1	0	0	0	0	0	0	0
13/	1	**	0	0	2	0	0	0	1	0	0	0	0	0	0
28/	1	**	0	0	1	1	0	1	0	0	0	0	0	0	0
14/	1	**	0	0	1	0	2	0	0	0	0	0	0	0	0
15/	1	**	0	0	0	2	1	0	0	0	0	0	0	0	0
-8/	1	**	3	0	0	0	0	0	0	0	0	1	0	0	0
-36/	1	**	2	1	0	0	0	0	0	0	1	0	0	0	0
-45/	1	**	2	0	1	0	0	0	0	1	0	0	0	0	0
-48/	1	**	2	0	0	1	0	0	1	0	0	0	0	0	0
-48/	1	**	2	0	0	0	1	1	0	0	0	0	0	0	0
-51/	1	**	1	2	0	0	0	0	0	1	0	0	0	0	0
-120/	1	**	1	1	1	0	0	0	1	0	0	0	0	0	0
-126/	1	**	1	1	0	1	0	1	0	0	0	0	0	0	0
-63/	1	**	1	1	0	0	2	0	0	0	0	0	0	0	0
-69/	1	**	1	0	2	0	0	1	0	0	0	0	0	0	0
-144/	1	**	1	0	1	1	1	0	0	0	0	0	0	0	0
-25/	1	**	1	0	0	3	0	0	0	0	0	0	0	0	0
-23/	1	**	0	3	0	0	0	0	1	0	0	0	0	0	0

UNCLASSIFIED

-78/	1	**	0	2	1	0	0	1	0	0	0	0	0	0	0
-81/	1	**	0	2	0	1	1	0	0	0	0	0	0	0	0
-87/	1	**	0	1	2	0	1	0	0	0	0	0	0	0	0
-90/	1	**	0	1	1	2	0	0	0	0	0	0	0	0	0
-32/	1	**	0	0	3	1	0	0	0	0	0	0	0	0	0
16/	1	**	4	0	0	0	0	0	0	0	1	0	0	0	0
92/	1	**	3	1	0	0	0	0	0	1	0	0	0	0	0
108/	1	**	3	0	1	0	0	0	1	0	0	0	0	0	0
112/	1	**	3	0	0	1	0	1	0	0	0	0	0	0	0
56/	1	**	3	0	0	0	2	0	0	0	0	0	0	0	0
186/	1	**	2	2	0	0	0	0	1	0	0	0	0	0	0
420/	1	**	2	1	1	0	0	1	0	0	0	0	0	0	0
432/	1	**	2	1	0	1	1	0	0	0	0	0	0	0	0
234/	1	**	2	0	2	0	1	0	0	0	0	0	0	0	0
240/	1	**	2	0	1	2	0	0	0	0	0	0	0	0	0
160/	1	**	1	3	0	0	0	1	0	0	0	0	0	0	0
528/	1	**	1	2	1	0	1	0	0	0	0	0	0	0	0
270/	1	**	1	2	0	2	0	0	0	0	0	0	0	0	0
576/	1	**	1	1	2	1	0	0	0	0	0	0	0	0	0
51/	1	**	1	0	4	0	0	0	0	0	0	0	0	0	0
50/	1	**	0	4	0	0	1	0	0	0	0	0	0	0	0
216/	1	**	0	3	1	1	0	0	0	0	0	0	0	0	0
114/	1	**	0	2	3	0	0	0	0	0	0	0	0	0	0
-31/	1	**	5	0	0	0	0	0	0	1	0	0	0	0	0
-210/	1	**	4	1	0	0	0	0	1	0	0	0	0	0	0
-235/	1	**	4	0	1	0	0	1	0	0	0	0	0	0	0
-240/	1	**	4	0	0	1	1	0	0	0	0	0	0	0	0
-540/	1	**	3	2	0	0	0	1	0	0	0	0	0	0	0
-1180/	1	**	3	1	1	0	1	0	0	0	0	0	0	0	0
-600/	1	**	3	1	0	2	0	0	0	0	0	0	0	0	0
-640/	1	**	3	0	2	1	0	0	0	0	0	0	0	0	0
-670/	1	**	2	3	0	0	1	0	0	0	0	0	0	0	0
-2160/	1	**	2	2	1	1	0	0	0	0	0	0	0	0	0
-760/	1	**	2	1	3	0	0	0	0	0	0	0	0	0	0
-405/	1	**	1	4	0	1	0	0	0	0	0	0	0	0	0
-850/	1	**	1	3	2	0	0	0	0	0	0	0	0	0	0
-95/	1	**	0	5	1	0	0	0	0	0	0	0	0	0	0
57/	1	**	6	0	0	0	0	0	1	0	0	0	0	0	0
438/	1	**	5	1	0	0	0	1	0	0	0	0	0	0	0
474/	1	**	5	0	1	0	1	0	0	0	0	0	0	0	0
240/	1	**	5	0	0	2	0	0	0	0	0	0	0	0	0
1350/	1	**	4	2	0	0	1	0	0	0	0	0	0	0	0
2880/	1	**	4	1	1	1	0	0	0	0	0	0	0	0	0
505/	1	**	4	0	3	0	0	0	0	0	0	0	0	0	0
2160/	1	**	3	3	0	1	0	0	0	0	0	0	0	0	0
3390/	1	**	3	2	2	0	0	0	0	0	0	0	0	0	0
1890/	1	**	2	4	1	0	0	0	0	0	0	0	0	0	0
140/	1	**	1	6	0	0	0	0	0	0	0	0	0	0	0
-99/	1	**	7	0	0	0	0	1	0	0	0	0	0	0	0
-847/	1	**	6	1	0	0	1	0	0	0	0	0	0	0	0
-896/	1	**	6	0	1	1	0	0	0	0	0	0	0	0	0
-3024/	1	**	5	2	0	1	0	0	0	0	0	0	0	0	0
-3150/	1	**	5	1	2	0	0	0	0	0	0	0	0	0	0
-5845/	1	**	4	3	1	0	0	0	0	0	0	0	0	0	0
-1295/	1	**	3	5	0	0	0	0	0	0	0	0	0	0	0
163/	1	**	8	0	0	0	1	0	0	0	0	0	0	0	0
1536/	1	**	7	1	0	1	0	0	0	0	0	0	0	0	0
796/	1	**	7	0	2	0	0	0	0	0	0	0	0	0	0
6188/	1	**	6	2	1	0	0	0	0	0	0	0	0	0	0
3416/	1	**	5	4	0	0	0	0	0	0	0	0	0	0	0
-256/	1	**	9	0	0	1	0	0	0	0	0	0	0	0	0
-2628/	1	**	8	1	1	0	0	0	0	0	0	0	0	0	0
-3852/	1	**	7	3	0	0	0	0	0	0	0	0	0	0	0
385/	1	**	10	0	1	0	0	0	0	0	0	0	0	0	0
2105/	1	**	9	2	0	0	0	0	0	0	0	0	0	0	0
-550/	1	**	11	1	0	0	0	0	0	0	0	0	0	0	0
55/	1	**	13	0	0	0	0	0	0	0	0	0	0	0	0

P= 1

C 5 5 =

1/	1	**	0	0	0	0	0	0	0	0	0	1
-2/	1	**	1	0	0	0	0	0	0	0	1	0
-3/	1	**	0	1	0	0	0	0	0	1	0	0
-4/	1	**	0	0	1	0	0	0	1	0	0	0
-5/	1	**	0	0	0	1	0	1	0	0	0	0
-3/	1	**	0	0	0	0	2	0	0	0	0	0
4/	1	**	2	0	0	0	0	0	0	1	0	0
12/	1	**	1	1	0	0	0	0	1	0	0	0
16/	1	**	1	0	1	0	0	1	0	0	0	0
20/	1	**	1	0	0	1	1	0	0	0	0	0
9/	1	**	0	2	0	0	0	1	0	0	0	0
24/	1	**	0	1	1	0	1	0	0	0	0	0
13/	1	**	0	1	0	2	0	0	0	0	0	0
14/	1	**	0	0	2	1	0	0	0	0	0	0
-8/	1	**	3	0	0	0	0	0	1	0	0	0
-36/	1	**	2	1	0	0	0	1	0	0	0	0
-48/	1	**	2	0	1	0	1	0	0	0	0	0
-27/	1	**	2	0	0	2	0	0	0	0	0	0
-54/	1	**	1	2	0	0	1	0	0	0	0	0
-132/	1	**	1	1	1	1	0	0	0	0	0	0
-24/	1	**	1	0	3	0	0	0	0	0	0	0
-25/	1	**	0	3	0	1	0	0	0	0	0	0
-42/	1	**	0	2	2	0	0	0	0	0	0	0
16/	1	**	4	0	0	0	0	1	0	0	0	0
96/	1	**	3	1	0	0	1	0	0	0	0	0
120/	1	**	3	0	1	1	0	0	0	0	0	0
204/	1	**	2	2	0	1	0	0	0	0	0	0
228/	1	**	2	1	2	0	0	0	0	0	0	0
176/	1	**	1	3	1	0	0	0	0	0	0	0
51/	5	**	0	5	0	0	0	0	0	0	0	0
-32/	1	**	5	0	0	0	1	0	0	0	0	0
-230/	1	**	4	1	0	1	0	0	0	0	0	0
-130/	1	**	4	0	2	0	0	0	0	0	0	0
-600/	1	**	3	2	1	0	0	0	0	0	0	0
-175/	1	**	2	4	0	0	0	0	0	0	0	0
62/	1	**	6	0	0	1	0	0	0	0	0	0
492/	1	**	5	1	1	0	0	0	0	0	0	0
480/	1	**	4	3	0	0	0	0	0	0	0	0
-112/	1	**	7	0	1	0	0	0	0	0	0	0
-462/	1	**	6	2	0	0	0	0	0	0	0	0
182/	1	**	8	1	0	0	0	0	0	0	0	0
-126/	5	**	10	0	0	0	0	0	0	0	0	0

UNCLASSIFIED

P= 1

C 5 6 =

1/	1	**	0	0	0	0	0	0	0	0	0	0	1
-2/	1	**	1	0	0	0	0	0	0	0	0	1	0
-3/	1	**	0	1	0	0	0	0	0	0	1	0	0
-4/	1	**	0	0	1	0	0	0	0	1	0	0	0
-5/	1	**	0	0	0	1	0	0	1	0	0	0	0
-6/	1	**	0	0	0	0	1	1	0	0	0	0	0
4/	1	**	2	0	0	0	0	0	0	0	1	0	0
12/	1	**	1	1	0	0	0	0	0	1	0	0	0
16/	1	**	1	0	1	0	0	0	1	0	0	0	0
20/	1	**	1	0	0	1	0	1	0	0	0	0	0
11/	1	**	1	0	0	0	2	0	0	0	0	0	0
9/	1	**	0	2	0	0	0	0	1	0	0	0	0
24/	1	**	0	1	1	0	0	1	0	0	0	0	0
28/	1	**	0	1	0	1	1	0	0	0	0	0	0
15/	1	**	0	0	2	0	1	0	0	0	0	0	0
16/	1	**	0	0	1	2	0	0	0	0	0	0	0
-8/	1	**	3	0	0	0	0	0	0	1	0	0	0
-36/	1	**	2	1	0	0	0	0	1	0	0	0	0
-48/	1	**	2	0	1	0	0	1	0	0	0	0	0
-57/	1	**	2	0	0	1	1	0	0	0	0	0	0
-54/	1	**	1	2	0	0	0	1	0	0	0	0	0
-138/	1	**	1	1	1	0	1	0	0	0	0	0	0
-75/	1	**	1	1	0	2	0	0	0	0	0	0	0
-81/	1	**	1	0	2	1	0	0	0	0	0	0	0
-26/	1	**	0	3	0	0	1	0	0	0	0	0	0
-93/	1	**	0	2	1	1	0	0	0	0	0	0	0
-34/	1	**	0	1	3	0	0	0	0	0	0	0	0
16/	1	**	4	0	0	0	0	0	1	0	0	0	0
96/	1	**	3	1	0	0	0	1	0	0	0	0	0
124/	1	**	3	0	1	0	1	0	0	0	0	0	0
68/	1	**	3	0	0	2	0	0	0	0	0	0	0
210/	1	**	2	2	0	0	1	0	0	0	0	0	0
504/	1	**	2	1	1	1	0	0	0	0	0	0	0
92/	1	**	2	0	3	0	0	0	0	0	0	0	0
192/	1	**	1	3	0	1	0	0	0	0	0	0	0
318/	1	**	1	2	2	0	0	0	0	0	0	0	0
61/	1	**	0	4	1	0	0	0	0	0	0	0	0
-32/	1	**	5	0	0	0	0	1	0	0	0	0	0
-235/	1	**	4	1	0	0	1	0	0	0	0	0	0
-285/	1	**	4	0	1	1	0	0	0	0	0	0	0
-650/	1	**	3	2	0	1	0	0	0	0	0	0	0
-720/	1	**	3	1	2	0	0	0	0	0	0	0	0
-830/	1	**	2	3	1	0	0	0	0	0	0	0	0
-96/	1	**	1	5	0	0	0	0	0	0	0	0	0
63/	1	**	6	0	0	0	1	0	0	0	0	0	0
528/	1	**	5	1	0	1	0	0	0	0	0	0	0
294/	1	**	5	0	2	0	0	0	0	0	0	0	0
1695/	1	**	4	2	1	0	0	0	0	0	0	0	0
655/	1	**	3	4	0	0	0	0	0	0	0	0	0
-119/	1	**	7	0	0	1	0	0	0	0	0	0	0
-1078/	1	**	6	1	1	0	0	0	0	0	0	0	0
-1253/	1	**	5	3	0	0	0	0	0	0	0	0	0
210/	1	**	8	0	1	0	0	0	0	0	0	0	0
980/	1	**	7	2	0	0	0	0	0	0	0	0	0
-336/	1	**	9	1	0	0	0	0	0	0	0	0	0
42/	1	**	11	0	0	0	0	0	0	0	0	0	0

P= 1

C 5 7 =

1/	1	**	0	0	0	0	0	0	0	0	0	0	0	1
-2/	1	**	1	0	0	0	0	0	0	0	0	0	1	0
-3/	1	**	0	1	0	0	0	0	0	0	0	1	0	0
-4/	1	**	0	0	1	0	0	0	0	0	1	0	0	0
-5/	1	**	0	0	0	1	0	0	0	1	0	0	0	0
-6/	1	**	0	0	0	0	1	0	1	0	0	0	0	0
-3/	1	**	0	0	0	0	0	2	0	0	0	0	0	0
4/	1	**	2	0	0	0	0	0	0	0	0	1	0	0
12/	1	**	1	1	0	0	0	0	0	0	1	0	0	0
16/	1	**	1	0	1	0	0	0	0	1	0	0	0	0
20/	1	**	1	0	0	1	0	0	1	0	0	0	0	0
22/	1	**	1	0	0	0	1	1	0	0	0	0	0	0
9/	1	**	0	2	0	0	0	0	0	1	0	0	0	0
24/	1	**	0	1	1	0	0	0	1	0	0	0	0	0
28/	1	**	0	1	0	1	0	1	0	0	0	0	0	0
15/	1	**	0	1	0	0	2	0	0	0	0	0	0	0
15/	1	**	0	0	2	0	0	1	0	0	0	0	0	0
34/	1	**	0	0	1	1	1	0	0	0	0	0	0	0
6/	1	**	0	0	0	3	0	0	0	0	0	0	0	0
-8/	1	**	3	0	0	0	0	0	0	0	1	0	0	0
-36/	1	**	2	1	0	0	0	0	0	1	0	0	0	0
-48/	1	**	2	0	1	0	0	0	1	0	0	0	0	0
-57/	1	**	2	0	0	1	0	1	0	0	0	0	0	0
-30/	1	**	2	0	0	0	2	0	0	0	0	0	0	0
-54/	1	**	1	2	0	0	0	0	1	0	0	0	0	0
-138/	1	**	1	1	1	0	0	1	0	0	0	0	0	0
-156/	1	**	1	1	0	1	1	0	0	0	0	0	0	0
-84/	1	**	1	0	2	0	1	0	0	0	0	0	0	0
-90/	1	**	1	0	1	2	0	0	0	0	0	0	0	0
-26/	1	**	0	3	0	0	0	1	0	0	0	0	0	0
-96/	1	**	0	2	1	0	1	0	0	0	0	0	0	0
-51/	1	**	0	2	0	2	0	0	0	0	0	0	0	0
-111/	1	**	0	1	2	1	0	0	0	0	0	0	0	0
-10/	1	**	0	0	4	0	0	0	0	0	0	0	0	0
16/	1	**	4	0	0	0	0	0	0	1	0	0	0	0
96/	1	**	3	1	0	0	0	0	1	0	0	0	0	0
124/	1	**	3	0	1	0	0	1	0	0	0	0	0	0
140/	1	**	3	0	0	1	1	0	0	0	0	0	0	0
210/	1	**	2	2	0	0	0	1	0	0	0	0	0	0
516/	1	**	2	1	1	0	1	0	0	0	0	0	0	0
276/	1	**	2	1	0	2	0	0	0	0	0	0	0	0
300/	1	**	2	0	2	1	0	0	0	0	0	0	0	0
196/	1	**	1	3	0	0	1	0	0	0	0	0	0	0
684/	1	**	1	2	1	1	0	0	0	0	0	0	0	0
248/	1	**	1	1	3	0	0	0	0	0	0	0	0	0
65/	1	**	0	4	0	1	0	0	0	0	0	0	0	0
142/	1	**	0	3	2	0	0	0	0	0	0	0	0	0
-32/	1	**	5	0	0	0	0	0	1	0	0	0	0	0
-235/	1	**	4	1	0	0	0	1	0	0	0	0	0	0
-290/	1	**	4	0	1	0	1	0	0	0	0	0	0	0
-155/	1	**	4	0	0	2	0	0	0	0	0	0	0	0
-660/	1	**	3	2	0	0	1	0	0	0	0	0	0	0
-1540/	1	**	3	1	1	1	0	0	0	0	0	0	0	0
-280/	1	**	3	0	3	0	0	0	0	0	0	0	0	0
-880/	1	**	2	3	0	1	0	0	0	0	0	0	0	0
-1440/	1	**	2	2	2	0	0	0	0	0	0	0	0	0
-550/	1	**	1	4	1	0	0	0	0	0	0	0	0	0
-21/	1	**	0	6	0	0	0	0	0	0	0	0	0	0
63/	1	**	6	0	0	0	0	1	0	0	0	0	0	0

UNCLASSIFIED

534/	1	**	5	1	0	0	1	0	0	0	0	0	0	0
624/	1	**	5	0	1	1	0	0	0	0	0	0	0	0
1785/	1	**	4	2	0	1	0	0	0	0	0	0	0	0
1950/	1	**	4	1	2	0	0	0	0	0	0	0	0	0
2980/	1	**	3	3	1	0	0	0	0	0	0	0	0	0
513/	1	**	2	5	0	0	0	0	0	0	0	0	0	0
-120/	1	**	7	0	0	0	1	0	0	0	0	0	0	0
-1127/	1	**	6	1	0	1	0	0	0	0	0	0	0	0
-616/	1	**	6	0	2	0	0	0	0	0	0	0	0	0
-4242/	1	**	5	2	1	0	0	0	0	0	0	0	0	0
-2030/	1	**	4	4	0	0	0	0	0	0	0	0	0	0
218/	1	**	8	0	0	1	0	0	0	0	0	0	0	0
2192/	1	**	7	1	1	0	0	0	0	0	0	0	0	0
2940/	1	**	6	3	0	0	0	0	0	0	0	0	0	0
-372/	1	**	9	0	1	0	0	0	0	0	0	0	0	0
-1926/	1	**	8	2	0	0	0	0	0	0	0	0	0	0
582/	1	**	10	1	0	0	0	0	0	0	0	0	0	0
-66/	1	**	12	0	0	0	0	0	0	0	0	0	0	0

P= 1

C 5 8 =

1/	1	**	0	0	0	0	0	0	0	0	0	0	0	0	1
-2/	1	**	1	0	0	0	0	0	0	0	0	0	0	1	0
-3/	1	**	0	1	0	0	0	0	0	0	0	0	1	0	0
-4/	1	**	0	0	1	0	0	0	0	0	0	1	0	0	0
-5/	1	**	0	0	0	1	0	0	0	0	1	0	0	0	0
-6/	1	**	0	0	0	0	1	0	0	1	0	0	0	0	0
-6/	1	**	0	0	0	0	0	1	1	0	0	0	0	0	0
4/	1	**	2	0	0	0	0	0	0	0	0	0	1	0	0
12/	1	**	1	1	0	0	0	0	0	0	0	1	0	0	0
16/	1	**	1	0	1	0	0	0	0	0	1	0	0	0	0
20/	1	**	1	0	0	1	0	0	0	1	0	0	0	0	0
22/	1	**	1	0	0	0	1	0	1	0	0	0	0	0	0
11/	1	**	1	0	0	0	0	2	0	0	0	0	0	0	0
9/	1	**	0	2	0	0	0	0	0	0	1	0	0	0	0
24/	1	**	0	1	1	0	0	0	0	1	0	0	0	0	0
28/	1	**	0	1	0	1	0	0	1	0	0	0	0	0	0
30/	1	**	0	1	0	0	1	1	0	0	0	0	0	0	0
15/	1	**	0	0	2	0	0	0	1	0	0	0	0	0	0
34/	1	**	0	0	1	1	0	1	0	0	0	0	0	0	0
18/	1	**	0	0	1	0	2	0	0	0	0	0	0	0	0
19/	1	**	0	0	0	2	1	0	0	0	0	0	0	0	0
-8/	1	**	3	0	0	0	0	0	0	0	0	1	0	0	0
-36/	1	**	2	1	0	0	0	0	0	0	1	0	0	0	0
-48/	1	**	2	0	1	0	0	0	0	1	0	0	0	0	0
-57/	1	**	2	0	0	1	0	0	1	0	0	0	0	0	0
-60/	1	**	2	0	0	0	1	1	0	0	0	0	0	0	0
-54/	1	**	1	2	0	0	0	0	0	1	0	0	0	0	0
-138/	1	**	1	1	1	0	0	0	1	0	0	0	0	0	0
-156/	1	**	1	1	0	1	0	1	0	0	0	0	0	0	0
-81/	1	**	1	1	0	0	2	0	0	0	0	0	0	0	0
-84/	1	**	1	0	2	0	0	1	0	0	0	0	0	0	0
-186/	1	**	1	0	1	1	1	0	0	0	0	0	0	0	0
-33/	1	**	1	0	0	3	0	0	0	0	0	0	0	0	0
-26/	1	**	0	3	0	0	0	0	1	0	0	0	0	0	0
-96/	1	**	0	2	1	0	0	1	0	0	0	0	0	0	0
-105/	1	**	0	2	0	1	1	0	0	0	0	0	0	0	0

-114/	1	**	0	1	2	0	1	0	0	0	0	0	0	0	0
-120/	1	**	0	1	1	2	0	0	0	0	0	0	0	0	0
-43/	1	**	0	0	3	1	0	0	0	0	0	0	0	0	0
16/	1	**	4	0	0	0	0	0	0	0	1	0	0	0	0
96/	1	**	3	1	0	0	0	0	0	1	0	0	0	0	0
124/	1	**	3	0	1	0	0	0	1	0	0	0	0	0	0
140/	1	**	3	0	0	1	0	1	0	0	0	0	0	0	0
72/	1	**	3	0	0	0	2	0	0	0	0	0	0	0	0
210/	1	**	2	2	0	0	0	0	1	0	0	0	0	0	0
516/	1	**	2	1	1	0	0	1	0	0	0	0	0	0	0
564/	1	**	2	1	0	1	1	0	0	0	0	0	0	0	0
306/	1	**	2	0	2	0	1	0	0	0	0	0	0	0	0
324/	1	**	2	0	1	2	0	0	0	0	0	0	0	0	0
196/	1	**	1	3	0	0	0	1	0	0	0	0	0	0	0
696/	1	**	1	2	1	0	1	0	0	0	0	0	0	0	0
366/	1	**	1	2	0	2	0	0	0	0	0	0	0	0	0
792/	1	**	1	1	2	1	0	0	0	0	0	0	0	0	0
71/	1	**	1	0	4	0	0	0	0	0	0	0	0	0	0
66/	1	**	0	4	0	0	1	0	0	0	0	0	0	0	0
300/	1	**	0	3	1	1	0	0	0	0	0	0	0	0	0
162/	1	**	0	2	3	0	0	0	0	0	0	0	0	0	0
-32/	1	**	5	0	0	0	0	0	0	1	0	0	0	0	0
-235/	1	**	4	1	0	0	0	0	1	0	0	0	0	0	0
-290/	1	**	4	0	1	0	0	1	0	0	0	0	0	0	0
-315/	1	**	4	0	0	1	1	0	0	0	0	0	0	0	0
-660/	1	**	3	2	0	0	0	1	0	0	0	0	0	0	0
-1560/	1	**	3	1	1	0	1	0	0	0	0	0	0	0	0
-820/	1	**	3	1	0	2	0	0	0	0	0	0	0	0	0
-890/	1	**	3	0	2	1	0	0	0	0	0	0	0	0	0
-890/	1	**	2	3	0	0	1	0	0	0	0	0	0	0	0
-3030/	1	**	2	2	1	1	0	0	0	0	0	0	0	0	0
-1090/	1	**	2	1	3	0	0	0	0	0	0	0	0	0	0
-575/	1	**	1	4	0	1	0	0	0	0	0	0	0	0	0
-1240/	1	**	1	3	2	0	0	0	0	0	0	0	0	0	0
-141/	1	**	0	5	1	0	0	0	0	0	0	0	0	0	0
63/	1	**	6	0	0	0	0	0	1	0	0	0	0	0	0
534/	1	**	5	1	0	0	0	1	0	0	0	0	0	0	0
630/	1	**	5	0	1	0	1	0	0	0	0	0	0	0	0
330/	1	**	5	0	0	2	0	0	0	0	0	0	0	0	0
1800/	1	**	4	2	0	0	1	0	0	0	0	0	0	0	0
4080/	1	**	4	1	1	1	0	0	0	0	0	0	0	0	0
735/	1	**	4	0	3	0	0	0	0	0	0	0	0	0	0
3100/	1	**	3	3	0	1	0	0	0	0	0	0	0	0	0
5010/	1	**	3	2	2	0	0	0	0	0	0	0	0	0	0
2850/	1	**	2	4	1	0	0	0	0	0	0	0	0	0	0
216/	1	**	1	6	0	0	0	0	0	0	0	0	0	0	0
-120/	1	**	7	0	0	0	0	1	0	0	0	0	0	0	0
-1134/	1	**	6	1	0	0	1	0	0	0	0	0	0	0	0
-1281/	1	**	6	0	1	1	0	0	0	0	0	0	0	0	0
-4389/	1	**	5	2	0	1	0	0	0	0	0	0	0	0	0
-4725/	1	**	5	1	2	0	0	0	0	0	0	0	0	0	0
-8960/	1	**	4	3	1	0	0	0	0	0	0	0	0	0	0
-2037/	1	**	3	5	0	0	0	0	0	0	0	0	0	0	0
219/	1	**	8	0	0	0	1	0	0	0	0	0	0	0	0
2256/	1	**	7	1	0	1	0	0	0	0	0	0	0	0	0
1212/	1	**	7	0	2	0	0	0	0	0	0	0	0	0	0
9660/	1	**	6	2	1	0	0	0	0	0	0	0	0	0	0
5488/	1	**	5	4	0	0	0	0	0	0	0	0	0	0	0
-381/	1	**	9	0	0	1	0	0	0	0	0	0	0	0	0
-4185/	1	**	8	1	1	0	0	0	0	0	0	0	0	0	0
-6336/	1	**	7	3	0	0	0	0	0	0	0	0	0	0	0
627/	1	**	10	0	1	0	0	0	0	0	0	0	0	0	0
3555/	1	**	9	2	0	0	0	0	0	0	0	0	0	0	0
-957/	1	**	11	1	0	0	0	0	0	0	0	0	0	0	0
99/	1	**	13	0	0	0	0	0	0	0	0	0	0	0	0

UNCLASSIFIED

P= 1

C 5 9 =

1/	1	**	0	0	0	0	0	0	0	0	0	0	0	0	0	1
-2/	1	**	1	0	0	0	0	0	0	0	0	0	0	0	1	0
-3/	1	**	0	1	0	0	0	0	0	0	0	0	0	1	0	0
-4/	1	**	0	0	1	0	0	0	0	0	0	0	1	0	0	0
-5/	1	**	0	0	0	1	0	0	0	0	0	1	0	0	0	0
-6/	1	**	0	0	0	0	1	0	0	0	1	0	0	0	0	0
-6/	1	**	0	0	0	0	0	1	0	1	0	0	0	0	0	0
-3/	1	**	0	0	0	0	0	0	2	0	0	0	0	0	0	0
4/	1	**	2	0	0	0	0	0	0	0	0	0	0	1	0	0
12/	1	**	1	1	0	0	0	0	0	0	0	0	1	0	0	0
16/	1	**	1	0	1	0	0	0	0	0	0	1	0	0	0	0
20/	1	**	1	0	0	1	0	0	0	0	1	0	0	0	0	0
22/	1	**	1	0	0	0	1	0	0	1	0	0	0	0	0	0
22/	1	**	1	0	0	0	0	1	1	0	0	0	0	0	0	0
9/	1	**	0	2	0	0	0	0	0	0	0	1	0	0	0	0
24/	1	**	0	1	1	0	0	0	0	0	1	0	0	0	0	0
28/	1	**	0	1	0	1	0	0	0	1	0	0	0	0	0	0
30/	1	**	0	1	0	0	1	0	1	0	0	0	0	0	0	0
15/	1	**	0	1	0	0	0	2	0	0	0	0	0	0	0	0
15/	1	**	0	0	2	0	0	0	0	1	0	0	0	0	0	0
34/	1	**	0	0	1	1	0	0	1	0	0	0	0	0	0	0
36/	1	**	0	0	1	0	1	1	0	0	0	0	0	0	0	0
19/	1	**	0	0	0	2	0	1	0	0	0	0	0	0	0	0
20/	1	**	0	0	0	1	2	0	0	0	0	0	0	0	0	0
-8/	1	**	3	0	0	0	0	0	0	0	0	0	1	0	0	0
-36/	1	**	2	1	0	0	0	0	0	0	0	1	0	0	0	0
-48/	1	**	2	0	1	0	0	0	0	0	1	0	0	0	0	0
-57/	1	**	2	0	0	1	0	0	0	1	0	0	0	0	0	0
-60/	1	**	2	0	0	0	1	0	1	0	0	0	0	0	0	0
-30/	1	**	2	0	0	0	0	2	0	0	0	0	0	0	0	0
-54/	1	**	1	2	0	0	0	0	0	0	1	0	0	0	0	0
-138/	1	**	1	1	1	0	0	0	0	1	0	0	0	0	0	0
-156/	1	**	1	1	0	1	0	0	1	0	0	0	0	0	0	0
-162/	1	**	1	1	0	0	1	1	0	0	0	0	0	0	0	0
-84/	1	**	1	0	2	0	0	0	1	0	0	0	0	0	0	0
-186/	1	**	1	0	1	1	0	1	0	0	0	0	0	0	0	0
-96/	1	**	1	0	1	0	2	0	0	0	0	0	0	0	0	0
-102/	1	**	1	0	0	2	1	0	0	0	0	0	0	0	0	0
-26/	1	**	0	3	0	0	0	0	0	1	0	0	0	0	0	0
-96/	1	**	0	2	1	0	0	0	1	0	0	0	0	0	0	0
-105/	1	**	0	2	0	1	0	1	0	0	0	0	0	0	0	0
-54/	1	**	0	2	0	0	2	0	0	0	0	0	0	0	0	0
-114/	1	**	0	1	2	0	0	1	0	0	0	0	0	0	0	0
-246/	1	**	0	1	1	1	1	0	0	0	0	0	0	0	0	0
-43/	1	**	0	1	0	3	0	0	0	0	0	0	0	0	0	0
-44/	1	**	0	0	3	0	1	0	0	0	0	0	0	0	0	0
-69/	1	**	0	0	2	2	0	0	0	0	0	0	0	0	0	0
16/	1	**	4	0	0	0	0	0	0	0	0	1	0	0	0	0
96/	1	**	3	1	0	0	0	0	0	0	1	0	0	0	0	0
124/	1	**	3	0	1	0	0	0	0	1	0	0	0	0	0	0
140/	1	**	3	0	0	1	0	0	1	0	0	0	0	0	0	0
144/	1	**	3	0	0	0	1	1	0	0	0	0	0	0	0	0
210/	1	**	2	2	0	0	0	0	0	1	0	0	0	0	0	0
516/	1	**	2	1	1	0	0	0	1	0	0	0	0	0	0	0
564/	1	**	2	1	0	1	0	1	0	0	0	0	0	0	0	0
288/	1	**	2	1	0	0	2	0	0	0	0	0	0	0	0	0
306/	1	**	2	0	2	0	0	1	0	0	0	0	0	0	0	0
660/	1	**	2	0	1	1	1	0	0	0	0	0	0	0	0	0
116/	1	**	2	0	0	3	0	0	0	0	0	0	0	0	0	0

196/	1	**	1	3	0	0	0	0	1	0	0	0	0	0	0	0
696/	1	**	1	2	1	0	0	1	0	0	0	0	0	0	0	0
744/	1	**	1	2	0	1	1	0	0	0	0	0	0	0	0	0
804/	1	**	1	1	2	0	1	0	0	0	0	0	0	0	0	0
840/	1	**	1	1	1	2	0	0	0	0	0	0	0	0	0	0
300/	1	**	1	0	3	1	0	0	0	0	0	0	0	0	0	0
66/	1	**	0	4	0	0	0	1	0	0	0	0	0	0	0	0
304/	1	**	0	3	1	0	1	0	0	0	0	0	0	0	0	0
158/	1	**	0	3	0	2	0	0	0	0	0	0	0	0	0	0
510/	1	**	0	2	2	1	0	0	0	0	0	0	0	0	0	0
91/	1	**	0	1	4	0	0	0	0	0	0	0	0	0	0	0
-32/	1	**	5	0	0	0	0	0	0	0	1	0	0	0	0	0
-235/	1	**	4	1	0	0	0	0	0	1	0	0	0	0	0	0
-290/	1	**	4	0	1	0	0	0	1	0	0	0	0	0	0	0
-315/	1	**	4	0	0	1	0	1	0	0	0	0	0	0	0	0
-160/	1	**	4	0	0	0	2	0	0	0	0	0	0	0	0	0
-660/	1	**	3	2	0	0	0	0	1	0	0	0	0	0	0	0
-1560/	1	**	3	1	1	0	0	1	0	0	0	0	0	0	0	0
-1660/	1	**	3	1	0	1	1	0	0	0	0	0	0	0	0	0
-900/	1	**	3	0	2	0	1	0	0	0	0	0	0	0	0	0
-940/	1	**	3	0	1	2	0	0	0	0	0	0	0	0	0	0
-890/	1	**	2	3	0	0	0	1	0	0	0	0	0	0	0	0
-3060/	1	**	2	2	1	0	1	0	0	0	0	0	0	0	0	0
-1590/	1	**	2	2	0	2	0	0	0	0	0	0	0	0	0	0
-3420/	1	**	2	1	2	1	0	0	0	0	0	0	0	0	0	0
-305/	1	**	2	0	4	0	0	0	0	0	0	0	0	0	0	0
-580/	1	**	1	4	0	0	1	0	0	0	0	0	0	0	0	0
-2580/	1	**	1	3	1	1	0	0	0	0	0	0	0	0	0	0
-1380/	1	**	1	2	3	0	0	0	0	0	0	0	0	0	0	0
-146/	1	**	0	5	0	1	0	0	0	0	0	0	0	0	0	0
-390/	1	**	0	4	2	0	0	0	0	0	0	0	0	0	0	0
63/	1	**	6	0	0	0	0	0	0	1	0	0	0	0	0	0
534/	1	**	5	1	0	0	0	0	1	0	0	0	0	0	0	0
630/	1	**	5	0	1	0	0	1	0	0	0	0	0	0	0	0
666/	1	**	5	0	0	1	1	0	0	0	0	0	0	0	0	0
1800/	1	**	4	2	0	0	0	1	0	0	0	0	0	0	0	0
4110/	1	**	4	1	1	0	1	0	0	0	0	0	0	0	0	0
2130/	1	**	4	1	0	2	0	0	0	0	0	0	0	0	0	0
2295/	1	**	4	0	2	1	0	0	0	0	0	0	0	0	0	0
3120/	1	**	3	3	0	0	1	0	0	0	0	0	0	0	0	0
10380/	1	**	3	2	1	1	0	0	0	0	0	0	0	0	0	0
3700/	1	**	3	1	3	0	0	0	0	0	0	0	0	0	0	0
2940/	1	**	2	4	0	1	0	0	0	0	0	0	0	0	0	0
6270/	1	**	2	3	2	0	0	0	0	0	0	0	0	0	0	0
1416/	1	**	1	5	1	0	0	0	0	0	0	0	0	0	0	0
38/	1	**	0	7	0	0	0	0	0	0	0	0	0	0	0	0
-120/	1	**	7	0	0	0	0	0	1	0	0	0	0	0	0	0
-1134/	1	**	6	1	0	0	0	1	0	0	0	0	0	0	0	0
-1288/	1	**	6	0	1	0	1	0	0	0	0	0	0	0	0	0
-665/	1	**	6	0	0	2	0	0	0	0	0	0	0	0	0	0
-4410/	1	**	5	2	0	0	1	0	0	0	0	0	0	0	0	0
-9744/	1	**	5	1	1	1	0	0	0	0	0	0	0	0	0	0
-1736/	1	**	5	0	3	0	0	0	0	0	0	0	0	0	0	0
-9205/	1	**	4	3	0	1	0	0	0	0	0	0	0	0	0	0
-14700/	1	**	4	2	2	0	0	0	0	0	0	0	0	0	0	0
-11060/	1	**	3	4	1	0	0	0	0	0	0	0	0	0	0	0
-1246/	1	**	2	6	0	0	0	0	0	0	0	0	0	0	0	0
219/	1	**	8	0	0	0	0	1	0	0	0	0	0	0	0	0
2264/	1	**	7	1	0	0	1	0	0	0	0	0	0	0	0	0
2488/	1	**	7	0	1	1	0	0	0	0	0	0	0	0	0	0
9884/	1	**	6	2	0	1	0	0	0	0	0	0	0	0	0	0
10500/	1	**	6	1	2	0	0	0	0	0	0	0	0	0	0	0
23688/	1	**	5	3	1	0	0	0	0	0	0	0	0	0	0	0
6664/	1	**	4	5	0	0	0	0	0	0	0	0	0	0	0	0
-382/	1	**	9	0	0	0	1	0	0	0	0	0	0	0	0	0

UNCLASSIFIED

-4266/	1	**	8	1	0	1	0	0	0	0	0	0	0	0	0
-2259/	1	**	8	0	2	0	0	0	0	0	0	0	0	0	0
-20376/	1	**	7	2	1	0	0	0	0	0	0	0	0	0	0
-13356/	1	**	6	4	0	0	0	0	0	0	0	0	0	0	0
637/	1	**	10	0	0	1	0	0	0	0	0	0	0	0	0
7570/	1	**	9	1	1	0	0	0	0	0	0	0	0	0	0
12735/	1	**	8	3	0	0	0	0	0	0	0	0	0	0	0
-1012/	1	**	11	0	1	0	0	0	0	0	0	0	0	0	0
-6226/	1	**	10	2	0	0	0	0	0	0	0	0	0	0	0
1507/	1	**	12	1	0	0	0	0	0	0	0	0	0	0	0
-143/	1	**	14	0	0	0	0	0	0	0	0	0	0	0	0

P= 1

C 6 6 =

1/	1	**	0	0	0	0	0	0	0	0	0	0	0	1
-2/	1	**	1	0	0	0	0	0	0	0	0	0	1	0
-3/	1	**	0	1	0	0	0	0	0	0	0	1	0	0
-4/	1	**	0	0	1	0	0	0	0	0	1	0	0	0
-5/	1	**	0	0	0	1	0	0	0	1	0	0	0	0
-6/	1	**	0	0	0	0	1	0	1	0	0	0	0	0
-7/	2	**	0	0	0	0	0	2	0	0	0	0	0	0
4/	1	**	2	0	0	0	0	0	0	0	0	1	0	0
12/	1	**	1	1	0	0	0	0	0	0	1	0	0	0
16/	1	**	1	0	1	0	0	0	0	1	0	0	0	0
20/	1	**	1	0	0	1	0	0	1	0	0	0	0	0
24/	1	**	1	0	0	0	1	1	0	0	0	0	0	0
9/	1	**	0	2	0	0	0	0	0	1	0	0	0	0
24/	1	**	0	1	1	0	0	0	1	0	0	0	0	0
30/	1	**	0	1	0	1	0	1	0	0	0	0	0	0
16/	1	**	0	1	0	0	2	0	0	0	0	0	0	0
16/	1	**	0	0	2	0	0	1	0	0	0	0	0	0
36/	1	**	0	0	1	1	1	0	0	0	0	0	0	0
19/	3	**	0	0	0	3	0	0	0	0	0	0	0	0
-8/	1	**	3	0	0	0	0	0	0	0	1	0	0	0
-36/	1	**	2	1	0	0	0	0	0	1	0	0	0	0
-48/	1	**	2	0	1	0	0	0	1	0	0	0	0	0
-60/	1	**	2	0	0	1	0	1	0	0	0	0	0	0
-33/	1	**	2	0	0	0	2	0	0	0	0	0	0	0
-54/	1	**	1	2	0	0	0	0	1	0	0	0	0	0
-144/	1	**	1	1	1	0	0	1	0	0	0	0	0	0
-168/	1	**	1	1	0	1	1	0	0	0	0	0	0	0
-90/	1	**	1	0	2	0	1	0	0	0	0	0	0	0
-96/	1	**	1	0	1	2	0	0	0	0	0	0	0	0
-27/	1	**	0	3	0	0	0	1	0	0	0	0	0	0
-102/	1	**	0	2	1	0	1	0	0	0	0	0	0	0
-111/	2	**	0	2	0	2	0	0	0	0	0	0	0	0
-120/	1	**	0	1	2	1	0	0	0	0	0	0	0	0
-11/	1	**	0	0	4	0	0	0	0	0	0	0	0	0
16/	1	**	4	0	0	0	0	0	0	1	0	0	0	0
96/	1	**	3	1	0	0	0	0	1	0	0	0	0	0
128/	1	**	3	0	1	0	0	1	0	0	0	0	0	0
152/	1	**	3	0	0	1	1	0	0	0	0	0	0	0
216/	1	**	2	2	0	0	0	1	0	0	0	0	0	0
552/	1	**	2	1	1	0	1	0	0	0	0	0	0	0
300/	1	**	2	1	0	2	0	0	0	0	0	0	0	0
324/	1	**	2	0	2	1	0	0	0	0	0	0	0	0

208/	1	**	1	3	0	0	1	0	0	0	0	0	0	0
744/	1	**	1	2	1	1	0	0	0	0	0	0	0	0
272/	1	**	1	1	3	0	0	0	0	0	0	0	0	0
71/	1	**	0	4	0	1	0	0	0	0	0	0	0	0
156/	1	**	0	3	2	0	0	0	0	0	0	0	0	0
-32/	1	**	5	0	0	0	0	0	1	0	0	0	0	0
-240/	1	**	4	1	0	0	0	1	0	0	0	0	0	0
-310/	1	**	4	0	1	0	1	0	0	0	0	0	0	0
-170/	1	**	4	0	0	2	0	0	0	0	0	0	0	0
-700/	1	**	3	2	0	0	1	0	0	0	0	0	0	0
-1680/	1	**	3	1	1	1	0	0	0	0	0	0	0	0
-920/	3	**	3	0	3	0	0	0	0	0	0	0	0	0
-960/	1	**	2	3	0	1	0	0	0	0	0	0	0	0
-1590/	1	**	2	2	2	0	0	0	0	0	0	0	0	0
-610/	1	**	1	4	1	0	0	0	0	0	0	0	0	0
-47/	2	**	0	6	0	0	0	0	0	0	0	0	0	0
64/	1	**	6	0	0	0	0	1	0	0	0	0	0	0
564/	1	**	5	1	0	0	1	0	0	0	0	0	0	0
684/	1	**	5	0	1	1	0	0	0	0	0	0	0	0
1950/	1	**	4	2	0	1	0	0	0	0	0	0	0	0
2160/	1	**	4	1	2	0	0	0	0	0	0	0	0	0
3320/	1	**	3	3	1	0	0	0	0	0	0	0	0	0
576/	1	**	2	5	0	0	0	0	0	0	0	0	0	0
-126/	1	**	7	0	0	0	1	0	0	0	0	0	0	0
-1232/	1	**	6	1	0	1	0	0	0	0	0	0	0	0
-686/	1	**	6	0	2	0	0	0	0	0	0	0	0	0
-4746/	1	**	5	2	1	0	0	0	0	0	0	0	0	0
-4585/	2	**	4	4	0	0	0	0	0	0	0	0	0	0
238/	1	**	8	0	0	1	0	0	0	0	0	0	0	0
2464/	1	**	7	1	1	0	0	0	0	0	0	0	0	0
10024/	3	**	6	3	0	0	0	0	0	0	0	0	0	0
-420/	1	**	9	0	1	0	0	0	0	0	0	0	0	0
-2205/	1	**	8	2	0	0	0	0	0	0	0	0	0	0
672/	1	**	10	1	0	0	0	0	0	0	0	0	0	0
-77/	1	**	12	0	0	0	0	0	0	0	0	0	0	0

UNCLASSIFIED

P= 1

C 6 7 =

1/	1	**	0	0	0	0	0	0	0	0	0	0	0	0	1
-2/	1	**	1	0	0	0	0	0	0	0	0	0	0	1	0
-3/	1	**	0	1	0	0	0	0	0	0	0	0	1	0	0
-4/	1	**	0	0	1	0	0	0	0	0	0	1	0	0	0
-5/	1	**	0	0	0	1	0	0	0	0	1	0	0	0	0
-6/	1	**	0	0	0	0	1	0	0	1	0	0	0	0	0
-7/	1	**	0	0	0	0	0	1	1	0	0	0	0	0	0
4/	1	**	2	0	0	0	0	0	0	0	0	0	1	0	0
12/	1	**	1	1	0	0	0	0	0	0	0	1	0	0	0
16/	1	**	1	0	1	0	0	0	0	0	1	0	0	0	0
20/	1	**	1	0	0	1	0	0	0	1	0	0	0	0	0
24/	1	**	1	0	0	0	1	0	1	0	0	0	0	0	0
13/	1	**	1	0	0	0	0	2	0	0	0	0	0	0	0
9/	1	**	0	2	0	0	0	0	0	0	1	0	0	0	0
24/	1	**	0	1	1	0	0	0	0	1	0	0	0	0	0
30/	1	**	0	1	0	1	0	0	1	0	0	0	0	0	0
34/	1	**	0	1	0	0	1	1	0	0	0	0	0	0	0
16/	1	**	0	0	2	0	0	0	1	0	0	0	0	0	0
38/	1	**	0	0	1	1	0	1	0	0	0	0	0	0	0
20/	1	**	0	0	1	0	2	0	0	0	0	0	0	0	0
21/	1	**	0	0	0	2	1	0	0	0	0	0	0	0	0
-8/	1	**	3	0	0	0	0	0	0	0	0	1	0	0	0
-36/	1	**	2	1	0	0	0	0	0	0	1	0	0	0	0
-48/	1	**	2	0	1	0	0	0	0	1	0	0	0	0	0
-60/	1	**	2	0	0	1	0	0	1	0	0	0	0	0	0
-69/	1	**	2	0	0	0	1	1	0	0	0	0	0	0	0
-54/	1	**	1	2	0	0	0	0	0	1	0	0	0	0	0
-144/	1	**	1	1	1	0	0	0	1	0	0	0	0	0	0
-174/	1	**	1	1	0	1	0	1	0	0	0	0	0	0	0
-93/	1	**	1	1	0	0	2	0	0	0	0	0	0	0	0
-93/	1	**	1	0	2	0	0	1	0	0	0	0	0	0	0
-210/	1	**	1	0	1	1	1	0	0	0	0	0	0	0	0
-37/	1	**	1	0	0	3	0	0	0	0	0	0	0	0	0
-27/	1	**	0	3	0	0	0	0	1	0	0	0	0	0	0
-105/	1	**	0	2	1	0	0	1	0	0	0	0	0	0	0
-120/	1	**	0	2	0	1	1	0	0	0	0	0	0	0	0
-129/	1	**	0	1	2	0	1	0	0	0	0	0	0	0	0
-138/	1	**	0	1	1	2	0	0	0	0	0	0	0	0	0
-50/	1	**	0	0	3	1	0	0	0	0	0	0	0	0	0
16/	1	**	4	0	0	0	0	0	0	0	1	0	0	0	0
96/	1	**	3	1	0	0	0	0	0	1	0	0	0	0	0
128/	1	**	3	0	1	0	0	0	1	0	0	0	0	0	0
156/	1	**	3	0	0	1	0	1	0	0	0	0	0	0	0
84/	1	**	3	0	0	0	2	0	0	0	0	0	0	0	0
216/	1	**	2	2	0	0	0	0	1	0	0	0	0	0	0
564/	1	**	2	1	1	0	0	1	0	0	0	0	0	0	0
648/	1	**	2	1	0	1	1	0	0	0	0	0	0	0	0
348/	1	**	2	0	2	0	1	0	0	0	0	0	0	0	0
372/	1	**	2	0	1	2	0	0	0	0	0	0	0	0	0
212/	1	**	1	3	0	0	0	1	0	0	0	0	0	0	0
792/	1	**	1	2	1	0	1	0	0	0	0	0	0	0	0
426/	1	**	1	2	0	2	0	0	0	0	0	0	0	0	0
924/	1	**	1	1	2	1	0	0	0	0	0	0	0	0	0
84/	1	**	1	0	4	0	0	0	0	0	0	0	0	0	0
75/	1	**	0	4	0	0	1	0	0	0	0	0	0	0	0
352/	1	**	0	3	1	1	0	0	0	0	0	0	0	0	0
192/	1	**	0	2	3	0	0	0	0	0	0	0	0	0	0
-32/	1	**	5	0	0	0	0	0	0	1	0	0	0	0	0
-240/	1	**	4	1	0	0	0	0	1	0	0	0	0	0	0

-315/	1	**	4	0	1	0	0	1	0	0	0	0	0	0	0
-365/	1	**	4	0	0	1	1	0	0	0	0	0	0	0	0
-710/	1	**	3	2	0	0	0	1	0	0	0	0	0	0	0
-1780/	1	**	3	1	1	0	1	0	0	0	0	0	0	0	0
-960/	1	**	3	1	0	2	0	0	0	0	0	0	0	0	0
-1040/	1	**	3	0	2	1	0	0	0	0	0	0	0	0	0
-1010/	1	**	2	3	0	0	1	0	0	0	0	0	0	0	0
-3570/	1	**	2	2	1	1	0	0	0	0	0	0	0	0	0
-1300/	1	**	2	1	3	0	0	0	0	0	0	0	0	0	0
-680/	1	**	1	4	0	1	0	0	0	0	0	0	0	0	0
-1490/	1	**	1	3	2	0	0	0	0	0	0	0	0	0	0
-171/	1	**	0	5	1	0	0	0	0	0	0	0	0	0	0
64/	1	**	6	0	0	0	0	0	1	0	0	0	0	0	0
570/	1	**	5	1	0	0	0	1	0	0	0	0	0	0	0
720/	1	**	5	0	1	0	1	0	0	0	0	0	0	0	0
390/	1	**	5	0	0	2	0	0	0	0	0	0	0	0	0
2040/	1	**	4	2	0	0	1	0	0	0	0	0	0	0	0
4830/	1	**	4	1	1	1	0	0	0	0	0	0	0	0	0
880/	1	**	4	0	3	0	0	0	0	0	0	0	0	0	0
3680/	1	**	3	3	0	1	0	0	0	0	0	0	0	0	0
6060/	1	**	3	2	2	0	0	0	0	0	0	0	0	0	0
3480/	1	**	2	4	1	0	0	0	0	0	0	0	0	0	0
267/	1	**	1	6	0	0	0	0	0	0	0	0	0	0	0
-127/	1	**	7	0	0	0	0	1	0	0	0	0	0	0	0
-1281/	1	**	6	1	0	0	1	0	0	0	0	0	0	0	0
-1526/	1	**	6	0	1	1	0	0	0	0	0	0	0	0	0
-5229/	1	**	5	2	0	1	0	0	0	0	0	0	0	0	0
-5754/	1	**	5	1	2	0	0	0	0	0	0	0	0	0	0
-11025/	1	**	4	3	1	0	0	0	0	0	0	0	0	0	0
-2541/	1	**	3	5	0	0	0	0	0	0	0	0	0	0	0
246/	1	**	8	0	0	0	1	0	0	0	0	0	0	0	0
2696/	1	**	7	1	0	1	0	0	0	0	0	0	0	0	0
1488/	1	**	7	0	2	0	0	0	0	0	0	0	0	0	0
11984/	1	**	6	2	1	0	0	0	0	0	0	0	0	0	0
6916/	1	**	5	4	0	0	0	0	0	0	0	0	0	0	0
-456/	1	**	9	0	0	1	0	0	0	0	0	0	0	0	0
-5238/	1	**	8	1	1	0	0	0	0	0	0	0	0	0	0
-8076/	1	**	7	3	0	0	0	0	0	0	0	0	0	0	0
792/	1	**	10	0	1	0	0	0	0	0	0	0	0	0	0
4590/	1	**	9	2	0	0	0	0	0	0	0	0	0	0	0
-1254/	1	**	11	1	0	0	0	0	0	0	0	0	0	0	0
132/	1	**	13	0	0	0	0	0	0	0	0	0	0	0	0

UNCLASSIFIED

P= 1

C 6 8 =

1/	1	**	0	0	0	0	0	0	0	0	0	0	0	0	0	1
-2/	1	**	1	0	0	0	0	0	0	0	0	0	0	0	1	0
-3/	1	**	0	1	0	0	0	0	0	0	0	0	0	1	0	0
-4/	1	**	0	0	1	0	0	0	0	0	0	0	1	0	0	0
-5/	1	**	0	0	0	1	0	0	0	0	0	1	0	0	0	0
-6/	1	**	0	0	0	0	1	0	0	0	1	0	0	0	0	0
-7/	1	**	0	0	0	0	0	1	0	1	0	0	0	0	0	0
-7/	2	**	0	0	0	0	0	0	2	0	0	0	0	0	0	0
4/	1	**	2	0	0	0	0	0	0	0	0	0	0	1	0	0
12/	1	**	1	1	0	0	0	0	0	0	0	0	1	0	0	0
16/	1	**	1	0	1	0	0	0	0	0	0	1	0	0	0	0
20/	1	**	1	0	0	1	0	0	0	0	1	0	0	0	0	0
24/	1	**	1	0	0	0	1	0	0	1	0	0	0	0	0	0
26/	1	**	1	0	0	0	0	1	1	0	0	0	0	0	0	0
9/	1	**	0	2	0	0	0	0	0	0	0	1	0	0	0	0
24/	1	**	0	1	1	0	0	0	0	0	1	0	0	0	0	0
30/	1	**	0	1	0	1	0	0	0	1	0	0	0	0	0	0
34/	1	**	0	1	0	0	1	0	1	0	0	0	0	0	0	0
18/	1	**	0	1	0	0	0	2	0	0	0	0	0	0	0	0
16/	1	**	0	0	2	0	0	0	0	1	0	0	0	0	0	0
38/	1	**	0	0	1	1	0	0	1	0	0	0	0	0	0	0
42/	1	**	0	0	1	0	1	1	0	0	0	0	0	0	0	0
22/	1	**	0	0	0	2	0	1	0	0	0	0	0	0	0	0
23/	1	**	0	0	0	1	2	0	0	0	0	0	0	0	0	0
-8/	1	**	3	0	0	0	0	0	0	0	0	0	1	0	0	0
-36/	1	**	2	1	0	0	0	0	0	0	0	1	0	0	0	0
-48/	1	**	2	0	1	0	0	0	0	0	1	0	0	0	0	0
-60/	1	**	2	0	0	1	0	0	0	1	0	0	0	0	0	0
-69/	1	**	2	0	0	0	1	0	1	0	0	0	0	0	0	0
-36/	1	**	2	0	0	0	0	2	0	0	0	0	0	0	0	0
-54/	1	**	1	2	0	0	0	0	0	0	1	0	0	0	0	0
-144/	1	**	1	1	1	0	0	0	0	1	0	0	0	0	0	0
-174/	1	**	1	1	0	1	0	0	1	0	0	0	0	0	0	0
-192/	1	**	1	1	0	0	1	1	0	0	0	0	0	0	0	0
-93/	1	**	1	0	2	0	0	0	1	0	0	0	0	0	0	0
-216/	1	**	1	0	1	1	0	1	0	0	0	0	0	0	0	0
-114/	1	**	1	0	1	0	2	0	0	0	0	0	0	0	0	0
-120/	1	**	1	0	0	2	1	0	0	0	0	0	0	0	0	0
-27/	1	**	0	3	0	0	0	0	0	1	0	0	0	0	0	0
-105/	1	**	0	2	1	0	0	0	1	0	0	0	0	0	0	0
-123/	1	**	0	2	0	1	0	1	0	0	0	0	0	0	0	0
-129/	2	**	0	2	0	0	2	0	0	0	0	0	0	0	0	0
-132/	1	**	0	1	2	0	0	1	0	0	0	0	0	0	0	0
-294/	1	**	0	1	1	1	1	0	0	0	0	0	0	0	0	0
-52/	1	**	0	1	0	3	0	0	0	0	0	0	0	0	0	0
-53/	1	**	0	0	3	0	1	0	0	0	0	0	0	0	0	0
-84/	1	**	0	0	2	2	0	0	0	0	0	0	0	0	0	0
16/	1	**	4	0	0	0	0	0	0	0	0	1	0	0	0	0
96/	1	**	3	1	0	0	0	0	0	0	1	0	0	0	0	0
128/	1	**	3	0	1	0	0	0	0	1	0	0	0	0	0	0
156/	1	**	3	0	0	1	0	0	1	0	0	0	0	0	0	0
172/	1	**	3	0	0	0	1	1	0	0	0	0	0	0	0	0
216/	1	**	2	2	0	0	0	0	0	1	0	0	0	0	0	0
564/	1	**	2	1	1	0	0	0	1	0	0	0	0	0	0	0
660/	1	**	2	1	0	1	0	1	0	0	0	0	0	0	0	0
348/	1	**	2	1	0	0	2	0	0	0	0	0	0	0	0	0
354/	1	**	2	0	2	0	0	1	0	0	0	0	0	0	0	0
792/	1	**	2	0	1	1	1	0	0	0	0	0	0	0	0	0
140/	1	**	2	0	0	3	0	0	0	0	0	0	0	0	0	0

212/	1	**	1	3	0	0	0	0	1	0	0	0	0	0	0	0
804/	1	**	1	2	1	0	0	1	0	0	0	0	0	0	0	0
900/	1	**	1	2	0	1	1	0	0	0	0	0	0	0	0	0
972/	1	**	1	1	2	0	1	0	0	0	0	0	0	0	0	0
1032/	1	**	1	1	1	2	0	0	0	0	0	0	0	0	0	0
372/	1	**	1	0	3	1	0	0	0	0	0	0	0	0	0	0
76/	1	**	0	4	0	0	0	1	0	0	0	0	0	0	0	0
368/	1	**	0	3	1	0	1	0	0	0	0	0	0	0	0	0
196/	1	**	0	3	0	2	0	0	0	0	0	0	0	0	0	0
636/	1	**	0	2	2	1	0	0	0	0	0	0	0	0	0	0
115/	1	**	0	1	4	0	0	0	0	0	0	0	0	0	0	0
-32/	1	**	5	0	0	0	0	0	0	0	1	0	0	0	0	0
-240/	1	**	4	1	0	0	0	0	0	1	0	0	0	0	0	0
-315/	1	**	4	0	1	0	0	0	1	0	0	0	0	0	0	0
-370/	1	**	4	0	0	1	0	1	0	0	0	0	0	0	0	0
-195/	1	**	4	0	0	0	2	0	0	0	0	0	0	0	0	0
-710/	1	**	3	2	0	0	0	0	1	0	0	0	0	0	0	0
-1800/	1	**	3	1	1	0	0	1	0	0	0	0	0	0	0	0
-2020/	1	**	3	1	0	1	1	0	0	0	0	0	0	0	0	0
-1090/	1	**	3	0	2	0	1	0	0	0	0	0	0	0	0	0
-1160/	1	**	3	0	1	2	0	0	0	0	0	0	0	0	0	0
-1020/	1	**	2	3	0	0	0	1	0	0	0	0	0	0	0	0
-3720/	1	**	2	2	1	0	1	0	0	0	0	0	0	0	0	0
-1980/	1	**	2	2	0	2	0	0	0	0	0	0	0	0	0	0
-4290/	1	**	2	1	2	1	0	0	0	0	0	0	0	0	0	0
-775/	2	**	2	0	4	0	0	0	0	0	0	0	0	0	0	0
-705/	1	**	1	4	0	0	1	0	0	0	0	0	0	0	0	0
-3260/	1	**	1	3	1	1	0	0	0	0	0	0	0	0	0	0
-1770/	1	**	1	2	3	0	0	0	0	0	0	0	0	0	0	0
-186/	1	**	0	5	0	1	0	0	0	0	0	0	0	0	0	0
-505/	1	**	0	4	2	0	0	0	0	0	0	0	0	0	0	0
64/	1	**	6	0	0	0	0	0	0	1	0	0	0	0	0	0
570/	1	**	5	1	0	0	0	0	1	0	0	0	0	0	0	0
726/	1	**	5	0	1	0	0	1	0	0	0	0	0	0	0	0
816/	1	**	5	0	0	1	1	0	0	0	0	0	0	0	0	0
2055/	1	**	4	2	0	0	0	1	0	0	0	0	0	0	0	0
5010/	1	**	4	1	1	0	1	0	0	0	0	0	0	0	0	0
2670/	1	**	4	1	0	2	0	0	0	0	0	0	0	0	0	0
2895/	1	**	4	0	2	1	0	0	0	0	0	0	0	0	0	0
3800/	1	**	3	3	0	0	1	0	0	0	0	0	0	0	0	0
13200/	1	**	3	2	1	1	0	0	0	0	0	0	0	0	0	0
4780/	1	**	3	1	3	0	0	0	0	0	0	0	0	0	0	0
3765/	1	**	2	4	0	1	0	0	0	0	0	0	0	0	0	0
8190/	1	**	2	3	2	0	0	0	0	0	0	0	0	0	0	0
1872/	1	**	1	5	1	0	0	0	0	0	0	0	0	0	0	0
51/	1	**	0	7	0	0	0	0	0	0	0	0	0	0	0	0
-127/	1	**	7	0	0	0	0	0	1	0	0	0	0	0	0	0
-1288/	1	**	6	1	0	0	0	1	0	0	0	0	0	0	0	0
-1575/	1	**	6	0	1	0	1	0	0	0	0	0	0	0	0	0
-840/	1	**	6	0	0	2	0	0	0	0	0	0	0	0	0	0
-5376/	1	**	5	2	0	0	1	0	0	0	0	0	0	0	0	0
-12474/	1	**	5	1	1	1	0	0	0	0	0	0	0	0	0	0
-2261/	1	**	5	0	3	0	0	0	0	0	0	0	0	0	0	0
-11865/	1	**	4	3	0	1	0	0	0	0	0	0	0	0	0	0
-38745/	2	**	4	2	2	0	0	0	0	0	0	0	0	0	0	0
-14770/	1	**	3	4	1	0	0	0	0	0	0	0	0	0	0	0
-3381/	2	**	2	6	0	0	0	0	0	0	0	0	0	0	0	0
247/	1	**	8	0	0	0	0	1	0	0	0	0	0	0	0	0
2760/	1	**	7	1	0	0	1	0	0	0	0	0	0	0	0	0
3208/	1	**	7	0	1	1	0	0	0	0	0	0	0	0	0	0
12824/	1	**	6	2	0	1	0	0	0	0	0	0	0	0	0	0
13972/	1	**	6	1	2	0	0	0	0	0	0	0	0	0	0	0
31976/	1	**	5	3	1	0	0	0	0	0	0	0	0	0	0	0
9156/	1	**	4	5	0	0	0	0	0	0	0	0	0	0	0	0
-465/	1	**	9	0	0	0	1	0	0	0	0	0	0	0	0	0

UNCLASSIFIED

-5571/	1	**	8	1	0	1	0	0	0	0	0	0	0	0	0	0
-6075/	2	**	8	0	2	0	0	0	0	0	0	0	0	0	0	0
-27828/	1	**	7	2	1	0	0	0	0	0	0	0	0	0	0	0
-18606/	1	**	6	4	0	0	0	0	0	0	0	0	0	0	0	0
837/	1	**	10	0	0	1	0	0	0	0	0	0	0	0	0	0
10470/	1	**	9	1	1	0	0	0	0	0	0	0	0	0	0	0
18015/	1	**	8	3	0	0	0	0	0	0	0	0	0	0	0	0
-1419/	1	**	11	0	1	0	0	0	0	0	0	0	0	0	0	0
-17919/	2	**	10	2	0	0	0	0	0	0	0	0	0	0	0	0
2211/	1	**	12	1	0	0	0	0	0	0	0	0	0	0	0	0
-429/	2	**	14	0	0	0	0	0	0	0	0	0	0	0	0	0

P= 1

C 6 9 =

1/	1	**	0	0	0	0	0	0	0	0	0	0	0	0	0	0	1
-2/	1	**	1	0	0	0	0	0	0	0	0	0	0	0	0	1	0
-3/	1	**	0	1	0	0	0	0	0	0	0	0	0	0	1	0	0
-4/	1	**	0	0	1	0	0	0	0	0	0	0	0	1	0	0	0
-5/	1	**	0	0	0	1	0	0	0	0	0	0	1	0	0	0	0
-6/	1	**	0	0	0	0	1	0	0	0	0	1	0	0	0	0	0
-7/	1	**	0	0	0	0	0	1	0	0	1	0	0	0	0	0	0
-7/	1	**	0	0	0	0	0	0	1	1	0	0	0	0	0	0	0
4/	1	**	2	0	0	0	0	0	0	0	0	0	0	0	1	0	0
12/	1	**	1	1	0	0	0	0	0	0	0	0	0	1	0	0	0
16/	1	**	1	0	1	0	0	0	0	0	0	0	1	0	0	0	0
20/	1	**	1	0	0	1	0	0	0	0	0	1	0	0	0	0	0
24/	1	**	1	0	0	0	1	0	0	0	1	0	0	0	0	0	0
26/	1	**	1	0	0	0	0	1	0	1	0	0	0	0	0	0	0
13/	1	**	1	0	0	0	0	0	2	0	0	0	0	0	0	0	0
9/	1	**	0	2	0	0	0	0	0	0	0	0	1	0	0	0	0
24/	1	**	0	1	1	0	0	0	0	0	0	1	0	0	0	0	0
30/	1	**	0	1	0	1	0	0	0	0	1	0	0	0	0	0	0
34/	1	**	0	1	0	0	1	0	0	1	0	0	0	0	0	0	0
36/	1	**	0	1	0	0	0	1	1	0	0	0	0	0	0	0	0
16/	1	**	0	0	2	0	0	0	0	0	1	0	0	0	0	0	0
38/	1	**	0	0	1	1	0	0	0	1	0	0	0	0	0	0	0
42/	1	**	0	0	1	0	1	0	1	0	0	0	0	0	0	0	0
22/	1	**	0	0	1	0	0	2	0	0	0	0	0	0	0	0	0
22/	1	**	0	0	0	2	0	0	1	0	0	0	0	0	0	0	0
48/	1	**	0	0	0	1	1	1	0	0	0	0	0	0	0	0	0
25/	3	**	0	0	0	0	3	0	0	0	0	0	0	0	0	0	0
-8/	1	**	3	0	0	0	0	0	0	0	0	0	0	1	0	0	0
-36/	1	**	2	1	0	0	0	0	0	0	0	0	1	0	0	0	0
-48/	1	**	2	0	1	0	0	0	0	0	0	1	0	0	0	0	0
-60/	1	**	2	0	0	1	0	0	0	0	1	0	0	0	0	0	0
-69/	1	**	2	0	0	0	1	0	0	1	0	0	0	0	0	0	0
-72/	1	**	2	0	0	0	0	1	1	0	0	0	0	0	0	0	0
-54/	1	**	1	2	0	0	0	0	0	0	0	1	0	0	0	0	0
-144/	1	**	1	1	1	0	0	0	0	0	1	0	0	0	0	0	0
-174/	1	**	1	1	0	1	0	0	0	1	0	0	0	0	0	0	0
-192/	1	**	1	1	0	0	1	0	1	0	0	0	0	0	0	0	0
-99/	1	**	1	1	0	0	0	2	0	0	0	0	0	0	0	0	0
-93/	1	**	1	0	2	0	0	0	0	1	0	0	0	0	0	0	0
-216/	1	**	1	0	1	1	0	0	1	0	0	0	0	0	0	0	0
-234/	1	**	1	0	1	0	1	1	0	0	0	0	0	0	0	0	0
-123/	1	**	1	0	0	2	0	1	0	0	0	0	0	0	0	0	0

-129/	1	**	1	0	0	1	2	0	0	0	0	0	0	0	0	0	0
-27/	1	**	0	3	0	0	0	0	0	0	1	0	0	0	0	0	0
-105/	1	**	0	2	1	0	0	0	0	1	0	0	0	0	0	0	0
-123/	1	**	0	2	0	1	0	0	1	0	0	0	0	0	0	0	0
-132/	1	**	0	2	0	0	1	1	0	0	0	0	0	0	0	0	0
-132/	1	**	0	1	2	0	0	0	1	0	0	0	0	0	0	0	0
-300/	1	**	0	1	1	1	0	1	0	0	0	0	0	0	0	0	0
-156/	1	**	0	1	1	0	2	0	0	0	0	0	0	0	0	0	0
-165/	1	**	0	1	0	2	1	0	0	0	0	0	0	0	0	0	0
-54/	1	**	0	0	3	0	0	1	0	0	0	0	0	0	0	0	0
-177/	1	**	0	0	2	1	1	0	0	0	0	0	0	0	0	0	0
-62/	1	**	0	0	1	3	0	0	0	0	0	0	0	0	0	0	0
16/	1	**	4	0	0	0	0	0	0	0	0	0	1	0	0	0	0
96/	1	**	3	1	0	0	0	0	0	0	0	1	0	0	0	0	0
128/	1	**	3	0	1	0	0	0	0	0	1	0	0	0	0	0	0
156/	1	**	3	0	0	1	0	0	0	1	0	0	0	0	0	0	0
172/	1	**	3	0	0	0	1	0	1	0	0	0	0	0	0	0	0
88/	1	**	3	0	0	0	0	2	0	0	0	0	0	0	0	0	0
216/	1	**	2	2	0	0	0	0	0	0	1	0	0	0	0	0	0
564/	1	**	2	1	1	0	0	0	0	1	0	0	0	0	0	0	0
660/	1	**	2	1	0	1	0	0	1	0	0	0	0	0	0	0	0
708/	1	**	2	1	0	0	1	1	0	0	0	0	0	0	0	0	0
354/	1	**	2	0	2	0	0	0	1	0	0	0	0	0	0	0	0
804/	1	**	2	0	1	1	0	1	0	0	0	0	0	0	0	0	0
420/	1	**	2	0	1	0	2	0	0	0	0	0	0	0	0	0	0
444/	1	**	2	0	0	2	1	0	0	0	0	0	0	0	0	0	0
212/	1	**	1	3	0	0	0	0	0	1	0	0	0	0	0	0	0
804/	1	**	1	2	1	0	0	0	1	0	0	0	0	0	0	0	0
912/	1	**	1	2	0	1	0	1	0	0	0	0	0	0	0	0	0
474/	1	**	1	2	0	0	2	0	0	0	0	0	0	0	0	0	0
984/	1	**	1	1	2	0	0	1	0	0	0	0	0	0	0	0	0
2160/	1	**	1	1	1	1	1	0	0	0	0	0	0	0	0	0	0
380/	1	**	1	1	0	3	0	0	0	0	0	0	0	0	0	0	0
388/	1	**	1	0	3	0	1	0	0	0	0	0	0	0	0	0	0
612/	1	**	1	0	2	2	0	0	0	0	0	0	0	0	0	0	0
76/	1	**	0	4	0	0	0	0	1	0	0	0	0	0	0	0	0
372/	1	**	0	3	1	0	0	1	0	0	0	0	0	0	0	0	0
408/	1	**	0	3	0	1	1	0	0	0	0	0	0	0	0	0	0
660/	1	**	0	2	2	0	1	0	0	0	0	0	0	0	0	0	0
696/	1	**	0	2	1	2	0	0	0	0	0	0	0	0	0	0	0
500/	1	**	0	1	3	1	0	0	0	0	0	0	0	0	0	0	0
27/	1	**	0	0	5	0	0	0	0	0	0	0	0	0	0	0	0
-32/	1	**	5	0	0	0	0	0	0	0	0	1	0	0	0	0	0
-240/	1	**	4	1	0	0	0	0	0	0	1	0	0	0	0	0	0
-315/	1	**	4	0	1	0	0	0	0	1	0	0	0	0	0	0	0
-370/	1	**	4	0	0	1	0	0	1	0	0	0	0	0	0	0	0
-395/	1	**	4	0	0	0	1	1	0	0	0	0	0	0	0	0	0
-710/	1	**	3	2	0	0	0	0	0	1	0	0	0	0	0	0	0
-1800/	1	**	3	1	1	0	0	0	1	0	0	0	0	0	0	0	0
-2040/	1	**	3	1	0	1	0	1	0	0	0	0	0	0	0	0	0
-1060/	1	**	3	1	0	0	2	0	0	0	0	0	0	0	0	0	0
-1100/	1	**	3	0	2	0	0	1	0	0	0	0	0	0	0	0	0
-2420/	1	**	3	0	1	1	1	0	0	0	0	0	0	0	0	0	0
-1280/	3	**	3	0	0	3	0	0	0	0	0	0	0	0	0	0	0
-1020/	1	**	2	3	0	0	0	0	1	0	0	0	0	0	0	0	0
-3750/	1	**	2	2	1	0	0	1	0	0	0	0	0	0	0	0	0
-4110/	1	**	2	2	0	1	1	0	0	0	0	0	0	0	0	0	0
-4440/	1	**	2	1	2	0	1	0	0	0	0	0	0	0	0	0	0
-4680/	1	**	2	1	1	2	0	0	0	0	0	0	0	0	0	0	0
-1680/	1	**	2	0	3	1	0	0	0	0	0	0	0	0	0	0	0
-710/	1	**	1	4	0	0	0	1	0	0	0	0	0	0	0	0	0
-3360/	1	**	1	3	1	0	1	0	0	0	0	0	0	0	0	0	0
-1770/	1	**	1	3	0	2	0	0	0	0	0	0	0	0	0	0	0
-5730/	1	**	1	2	2	1	0	0	0	0	0	0	0	0	0	0	0
-1030/	1	**	1	1	4	0	0	0	0	0	0	0	0	0	0	0	0

UNCLASSIFIED

-191/	1	**	0	5	0	0	1	0	0	0	0	0	0	0	0	0	0
-1085/	1	**	0	4	1	1	0	0	0	0	0	0	0	0	0	0	0
-780/	1	**	0	3	3	0	0	0	0	0	0	0	0	0	0	0	0
64/	1	**	6	0	0	0	0	0	0	0	1	0	0	0	0	0	0
570/	1	**	5	1	0	0	0	0	0	1	0	0	0	0	0	0	0
726/	1	**	5	0	1	0	0	0	1	0	0	0	0	0	0	0	0
822/	1	**	5	0	0	1	0	1	0	0	0	0	0	0	0	0	0
426/	1	**	5	0	0	0	2	0	0	0	0	0	0	0	0	0	0
2055/	1	**	4	2	0	0	0	0	1	0	0	0	0	0	0	0	0
5040/	1	**	4	1	1	0	0	1	0	0	0	0	0	0	0	0	0
5520/	1	**	4	1	0	1	1	0	0	0	0	0	0	0	0	0	0
2985/	1	**	4	0	2	0	1	0	0	0	0	0	0	0	0	0	0
3150/	1	**	4	0	1	2	0	0	0	0	0	0	0	0	0	0	0
3820/	1	**	3	3	0	0	0	1	0	0	0	0	0	0	0	0	0
13560/	1	**	3	2	1	0	1	0	0	0	0	0	0	0	0	0	0
7140/	1	**	3	2	0	2	0	0	0	0	0	0	0	0	0	0	0
15420/	1	**	3	1	2	1	0	0	0	0	0	0	0	0	0	0	0
1385/	1	**	3	0	4	0	0	0	0	0	0	0	0	0	0	0	0
3855/	1	**	2	4	0	0	1	0	0	0	0	0	0	0	0	0	0
17520/	1	**	2	3	1	1	0	0	0	0	0	0	0	0	0	0	0
9450/	1	**	2	2	3	0	0	0	0	0	0	0	0	0	0	0	0
1992/	1	**	1	5	0	1	0	0	0	0	0	0	0	0	0	0	0
5370/	1	**	1	4	2	0	0	0	0	0	0	0	0	0	0	0	0
407/	1	**	0	6	1	0	0	0	0	0	0	0	0	0	0	0	0
-127/	1	**	7	0	0	0	0	0	0	1	0	0	0	0	0	0	0
-1288/	1	**	6	1	0	0	0	0	1	0	0	0	0	0	0	0	0
-1582/	1	**	6	0	1	0	0	1	0	0	0	0	0	0	0	0	0
-1729/	1	**	6	0	0	1	1	0	0	0	0	0	0	0	0	0	0
-5397/	1	**	5	2	0	0	0	1	0	0	0	0	0	0	0	0	0
-12768/	1	**	5	1	1	0	1	0	0	0	0	0	0	0	0	0	0
-6720/	1	**	5	1	0	2	0	0	0	0	0	0	0	0	0	0	0
-7266/	1	**	5	0	2	1	0	0	0	0	0	0	0	0	0	0	0
-12110/	1	**	4	3	0	0	1	0	0	0	0	0	0	0	0	0	0
-41265/	1	**	4	2	1	1	0	0	0	0	0	0	0	0	0	0	0
-14840/	1	**	4	1	3	0	0	0	0	0	0	0	0	0	0	0	0
-15645/	1	**	3	4	0	1	0	0	0	0	0	0	0	0	0	0	0
-33740/	1	**	3	3	2	0	0	0	0	0	0	0	0	0	0	0	0
-11508/	1	**	2	5	1	0	0	0	0	0	0	0	0	0	0	0	0
-623/	1	**	1	7	0	0	0	0	0	0	0	0	0	0	0	0	0
247/	1	**	8	0	0	0	0	0	1	0	0	0	0	0	0	0	0
2768/	1	**	7	1	0	0	0	1	0	0	0	0	0	0	0	0	0
3272/	1	**	7	0	1	0	1	0	0	0	0	0	0	0	0	0	0
1720/	1	**	7	0	0	2	0	0	0	0	0	0	0	0	0	0	0
13048/	1	**	6	2	0	0	1	0	0	0	0	0	0	0	0	0	0
29624/	1	**	6	1	1	1	0	0	0	0	0	0	0	0	0	0	0
15988/	3	**	6	0	3	0	0	0	0	0	0	0	0	0	0	0	0
33712/	1	**	5	3	0	1	0	0	0	0	0	0	0	0	0	0	0
54516/	1	**	5	2	2	0	0	0	0	0	0	0	0	0	0	0	0
51660/	1	**	4	4	1	0	0	0	0	0	0	0	0	0	0	0	0
23492/	3	**	3	6	0	0	0	0	0	0	0	0	0	0	0	0	0
-466/	1	**	9	0	0	0	0	1	0	0	0	0	0	0	0	0	0
-5652/	1	**	8	1	0	0	1	0	0	0	0	0	0	0	0	0	0
-6408/	1	**	8	0	1	1	0	0	0	0	0	0	0	0	0	0	0
-29196/	1	**	7	2	0	1	0	0	0	0	0	0	0	0	0	0	0
-31464/	1	**	7	1	2	0	0	0	0	0	0	0	0	0	0	0	0
-83496/	1	**	6	3	1	0	0	0	0	0	0	0	0	0	0	0	0
-28476/	1	**	5	5	0	0	0	0	0	0	0	0	0	0	0	0	0
847/	1	**	10	0	0	0	1	0	0	0	0	0	0	0	0	0	0
10930/	1	**	9	1	0	1	0	0	0	0	0	0	0	0	0	0	0
5885/	1	**	9	0	2	0	0	0	0	0	0	0	0	0	0	0	0
60255/	1	**	8	2	1	0	0	0	0	0	0	0	0	0	0	0	0
45660/	1	**	7	4	0	0	0	0	0	0	0	0	0	0	0	0	0
-1474/	1	**	11	0	0	1	0	0	0	0	0	0	0	0	0	0	0
-19844/	1	**	10	1	1	0	0	0	0	0	0	0	0	0	0	0	0
-112750/	3	**	9	3	0	0	0	0	0	0	0	0	0	0	0	0	0

2431/	1	**	12	0	1	0	0	0	0	0	0	0	0	0	0	0
16566/	1	**	11	2	0	0	0	0	0	0	0	0	0	0	0	0
-3718/	1	**	13	1	0	0	0	0	0	0	0	0	0	0	0	0
1001/	3	**	15	0	0	0	0	0	0	0	0	0	0	0	0	0

P= 1

C 7 7 =

1/	1	**	0	0	0	0	0	0	0	0	0	0	0	0	0	1
-2/	1	**	1	0	0	0	0	0	0	0	0	0	0	0	1	0
-3/	1	**	0	1	0	0	0	0	0	0	0	0	0	1	0	0
-4/	1	**	0	0	1	0	0	0	0	0	0	0	1	0	0	0
-5/	1	**	0	0	0	1	0	0	0	0	0	1	0	0	0	0
-6/	1	**	0	0	0	0	1	0	0	0	1	0	0	0	0	0
-7/	1	**	0	0	0	0	0	1	0	1	0	0	0	0	0	0
-4/	1	**	0	0	0	0	0	0	2	0	0	0	0	0	0	0
4/	1	**	2	0	0	0	0	0	0	0	0	0	0	1	0	0
12/	1	**	1	1	0	0	0	0	0	0	0	0	1	0	0	0
16/	1	**	1	0	1	0	0	0	0	0	0	1	0	0	0	0
20/	1	**	1	0	0	1	0	0	0	0	1	0	0	0	0	0
24/	1	**	1	0	0	0	1	0	0	1	0	0	0	0	0	0
28/	1	**	1	0	0	0	0	1	1	0	0	0	0	0	0	0
9/	1	**	0	2	0	0	0	0	0	0	0	1	0	0	0	0
24/	1	**	0	1	1	0	0	0	0	0	1	0	0	0	0	0
30/	1	**	0	1	0	1	0	0	0	1	0	0	0	0	0	0
36/	1	**	0	1	0	0	1	0	1	0	0	0	0	0	0	0
19/	1	**	0	1	0	0	0	2	0	0	0	0	0	0	0	0
16/	1	**	0	0	2	0	0	0	0	1	0	0	0	0	0	0
40/	1	**	0	0	1	1	0	0	1	0	0	0	0	0	0	0
44/	1	**	0	0	1	0	1	1	0	0	0	0	0	0	0	0
23/	1	**	0	0	0	2	0	1	0	0	0	0	0	0	0	0
24/	1	**	0	0	0	1	2	0	0	0	0	0	0	0	0	0
-8/	1	**	3	0	0	0	0	0	0	0	0	0	1	0	0	0
-36/	1	**	2	1	0	0	0	0	0	0	0	1	0	0	0	0
-48/	1	**	2	0	1	0	0	0	0	0	1	0	0	0	0	0
-60/	1	**	2	0	0	1	0	0	0	1	0	0	0	0	0	0
-72/	1	**	2	0	0	0	1	0	1	0	0	0	0	0	0	0
-39/	1	**	2	0	0	0	0	2	0	0	0	0	0	0	0	0
-54/	1	**	1	2	0	0	0	0	0	0	1	0	0	0	0	0
-144/	1	**	1	1	1	0	0	0	0	1	0	0	0	0	0	0
-180/	1	**	1	1	0	1	0	0	1	0	0	0	0	0	0	0
-204/	1	**	1	1	0	0	1	1	0	0	0	0	0	0	0	0
-96/	1	**	1	0	2	0	0	0	1	0	0	0	0	0	0	0
-228/	1	**	1	0	1	1	0	1	0	0	0	0	0	0	0	0
-120/	1	**	1	0	1	0	2	0	0	0	0	0	0	0	0	0
-126/	1	**	1	0	0	2	1	0	0	0	0	0	0	0	0	0
-27/	1	**	0	3	0	0	0	0	0	1	0	0	0	0	0	0
-108/	1	**	0	2	1	0	0	0	1	0	0	0	0	0	0	0
-129/	1	**	0	2	0	1	0	1	0	0	0	0	0	0	0	0
-69/	1	**	0	2	0	0	2	0	0	0	0	0	0	0	0	0
-138/	1	**	0	1	2	0	0	1	0	0	0	0	0	0	0	0
-312/	1	**	0	1	1	1	1	0	0	0	0	0	0	0	0	0
-55/	1	**	0	1	0	3	0	0	0	0	0	0	0	0	0	0
-56/	1	**	0	0	3	0	1	0	0	0	0	0	0	0	0	0
-90/	1	**	0	0	2	2	0	0	0	0	0	0	0	0	0	0
16/	1	**	4	0	0	0	0	0	0	0	0	1	0	0	0	0
96/	1	**	3	1	0	0	0	0	0	0	1	0	0	0	0	0

UNCLASSIFIED

128/	1	**	3	0	1	0	0	0	0	1	0	0	0	0	0	0
160/	1	**	3	0	0	1	0	0	1	0	0	0	0	0	0	0
184/	1	**	3	0	0	0	1	1	0	0	0	0	0	0	0	0
216/	1	**	2	2	0	0	0	0	0	1	0	0	0	0	0	0
576/	1	**	2	1	1	0	0	0	1	0	0	0	0	0	0	0
696/	1	**	2	1	0	1	0	1	0	0	0	0	0	0	0	0
372/	1	**	2	1	0	0	2	0	0	0	0	0	0	0	0	0
372/	1	**	2	0	2	0	0	1	0	0	0	0	0	0	0	0
840/	1	**	2	0	1	1	1	0	0	0	0	0	0	0	0	0
148/	1	**	2	0	0	3	0	0	0	0	0	0	0	0	0	0
216/	1	**	1	3	0	0	0	0	1	0	0	0	0	0	0	0
840/	1	**	1	2	1	0	0	1	0	0	0	0	0	0	0	0
960/	1	**	1	2	0	1	1	0	0	0	0	0	0	0	0	0
1032/	1	**	1	1	2	0	1	0	0	0	0	0	0	0	0	0
1104/	1	**	1	1	1	2	0	0	0	0	0	0	0	0	0	0
400/	1	**	1	0	3	1	0	0	0	0	0	0	0	0	0	0
79/	1	**	0	4	0	0	0	1	0	0	0	0	0	0	0	0
392/	1	**	0	3	1	0	1	0	0	0	0	0	0	0	0	0
210/	1	**	0	3	0	2	0	0	0	0	0	0	0	0	0	0
684/	1	**	0	2	2	1	0	0	0	0	0	0	0	0	0	0
124/	1	**	0	1	4	0	0	0	0	0	0	0	0	0	0	0
-32/	1	**	5	0	0	0	0	0	0	0	1	0	0	0	0	0
-240/	1	**	4	1	0	0	0	0	0	1	0	0	0	0	0	0
-320/	1	**	4	0	1	0	0	0	1	0	0	0	0	0	0	0
-390/	1	**	4	0	0	1	0	1	0	0	0	0	0	0	0	0
-210/	1	**	4	0	0	0	2	0	0	0	0	0	0	0	0	0
-720/	1	**	3	2	0	0	0	0	1	0	0	0	0	0	0	0
-1880/	1	**	3	1	1	0	0	1	0	0	0	0	0	0	0	0
-2160/	1	**	3	1	0	1	1	0	0	0	0	0	0	0	0	0
-1160/	1	**	3	0	2	0	1	0	0	0	0	0	0	0	0	0
-1240/	1	**	3	0	1	2	0	0	0	0	0	0	0	0	0	0
-1060/	1	**	2	3	0	0	0	1	0	0	0	0	0	0	0	0
-3960/	1	**	2	2	1	0	1	0	0	0	0	0	0	0	0	0
-2130/	1	**	2	2	0	2	0	0	0	0	0	0	0	0	0	0
-4620/	1	**	2	1	2	1	0	0	0	0	0	0	0	0	0	0
-420/	1	**	2	0	4	0	0	0	0	0	0	0	0	0	0	0
-750/	1	**	1	4	0	0	1	0	0	0	0	0	0	0	0	0
-3520/	1	**	1	3	1	1	0	0	0	0	0	0	0	0	0	0
-1920/	1	**	1	2	3	0	0	0	0	0	0	0	0	0	0	0
-201/	1	**	0	5	0	1	0	0	0	0	0	0	0	0	0	0
-550/	1	**	0	4	2	0	0	0	0	0	0	0	0	0	0	0
64/	1	**	6	0	0	0	0	0	0	1	0	0	0	0	0	0
576/	1	**	5	1	0	0	0	0	1	0	0	0	0	0	0	0
756/	1	**	5	0	1	0	0	1	0	0	0	0	0	0	0	0
876/	1	**	5	0	0	1	1	0	0	0	0	0	0	0	0	0
2130/	1	**	4	2	0	0	0	1	0	0	0	0	0	0	0	0
5340/	1	**	4	1	1	0	1	0	0	0	0	0	0	0	0	0
2880/	1	**	4	1	0	2	0	0	0	0	0	0	0	0	0	0
3120/	1	**	4	0	2	1	0	0	0	0	0	0	0	0	0	0
4040/	1	**	3	3	0	0	1	0	0	0	0	0	0	0	0	0
14280/	1	**	3	2	1	1	0	0	0	0	0	0	0	0	0	0
5200/	1	**	3	1	3	0	0	0	0	0	0	0	0	0	0	0
4080/	1	**	2	4	0	1	0	0	0	0	0	0	0	0	0	0
8940/	1	**	2	3	2	0	0	0	0	0	0	0	0	0	0	0
2052/	1	**	1	5	1	0	0	0	0	0	0	0	0	0	0	0
393/	7	**	0	7	0	0	0	0	0	0	0	0	0	0	0	0
-128/	1	**	7	0	0	0	0	0	1	0	0	0	0	0	0	0
-1330/	1	**	6	1	0	0	0	1	0	0	0	0	0	0	0	0
-1680/	1	**	6	0	1	0	1	0	0	0	0	0	0	0	0	0
-910/	1	**	6	0	0	2	0	0	0	0	0	0	0	0	0	0
-5712/	1	**	5	2	0	0	1	0	0	0	0	0	0	0	0	0
-13524/	1	**	5	1	1	1	0	0	0	0	0	0	0	0	0	0
-2464/	1	**	5	0	3	0	0	0	0	0	0	0	0	0	0	0
-12880/	1	**	4	3	0	1	0	0	0	0	0	0	0	0	0	0
-21210/	1	**	4	2	2	0	0	0	0	0	0	0	0	0	0	0

-16240/	1	**	3	4	1	0	0	0	0	0	0	0	0	0	0	0
-1869/	1	**	2	6	0	0	0	0	0	0	0	0	0	0	0	0
254/	1	**	8	0	0	0	0	1	0	0	0	0	0	0	0	0
2928/	1	**	7	1	0	0	1	0	0	0	0	0	0	0	0	0
3488/	1	**	7	0	1	1	0	0	0	0	0	0	0	0	0	0
13944/	1	**	6	2	0	1	0	0	0	0	0	0	0	0	0	0
15344/	1	**	6	1	2	0	0	0	0	0	0	0	0	0	0	0
35280/	1	**	5	3	1	0	0	0	0	0	0	0	0	0	0	0
10164/	1	**	4	5	0	0	0	0	0	0	0	0	0	0	0	0
-492/	1	**	9	0	0	0	1	0	0	0	0	0	0	0	0	0
-6066/	1	**	8	1	0	1	0	0	0	0	0	0	0	0	0	0
-3348/	1	**	8	0	2	0	0	0	0	0	0	0	0	0	0	0
-30816/	1	**	7	2	1	0	0	0	0	0	0	0	0	0	0	0
-20748/	1	**	6	4	0	0	0	0	0	0	0	0	0	0	0	0
912/	1	**	10	0	0	1	0	0	0	0	0	0	0	0	0	0
11640/	1	**	9	1	1	0	0	0	0	0	0	0	0	0	0	0
20190/	1	**	8	3	0	0	0	0	0	0	0	0	0	0	0	0
-1584/	1	**	11	0	1	0	0	0	0	0	0	0	0	0	0	0
-10098/	1	**	10	2	0	0	0	0	0	0	0	0	0	0	0	0
2508/	1	**	12	1	0	0	0	0	0	0	0	0	0	0	0	0
-1716/	7	**	14	0	0	0	0	0	0	0	0	0	0	0	0	0

P= 1

C 7 8 =

1/	1	**	0	0	0	0	0	0	0	0	0	0	0	0	0	0	1
-2/	1	**	1	0	0	0	0	0	0	0	0	0	0	0	0	1	0
-3/	1	**	0	1	0	0	0	0	0	0	0	0	0	0	1	0	0
-4/	1	**	0	0	1	0	0	0	0	0	0	0	0	1	0	0	0
-5/	1	**	0	0	0	1	0	0	0	0	0	0	1	0	0	0	0
-6/	1	**	0	0	0	0	1	0	0	0	0	1	0	0	0	0	0
-7/	1	**	0	0	0	0	0	1	0	0	1	0	0	0	0	0	0
-8/	1	**	0	0	0	0	0	0	1	1	0	0	0	0	0	0	0
4/	1	**	2	0	0	0	0	0	0	0	0	0	0	0	1	0	0
12/	1	**	1	1	0	0	0	0	0	0	0	0	0	1	0	0	0
16/	1	**	1	0	1	0	0	0	0	0	0	0	1	0	0	0	0
20/	1	**	1	0	0	1	0	0	0	0	0	1	0	0	0	0	0
24/	1	**	1	0	0	0	1	0	0	0	1	0	0	0	0	0	0
28/	1	**	1	0	0	0	0	1	0	1	0	0	0	0	0	0	0
15/	1	**	1	0	0	0	0	0	2	0	0	0	0	0	0	0	0
9/	1	**	0	2	0	0	0	0	0	0	0	0	1	0	0	0	0
24/	1	**	0	1	1	0	0	0	0	0	0	1	0	0	0	0	0
30/	1	**	0	1	0	1	0	0	0	0	1	0	0	0	0	0	0
36/	1	**	0	1	0	0	1	0	0	1	0	0	0	0	0	0	0
40/	1	**	0	1	0	0	0	1	1	0	0	0	0	0	0	0	0
16/	1	**	0	0	2	0	0	0	0	0	1	0	0	0	0	0	0
40/	1	**	0	0	1	1	0	0	0	1	0	0	0	0	0	0	0
46/	1	**	0	0	1	0	1	0	1	0	0	0	0	0	0	0	0
24/	1	**	0	0	1	0	0	2	0	0	0	0	0	0	0	0	0
24/	1	**	0	0	0	2	0	0	1	0	0	0	0	0	0	0	0
52/	1	**	0	0	0	1	1	1	0	0	0	0	0	0	0	0	0
9/	1	**	0	0	0	0	3	0	0	0	0	0	0	0	0	0	0
-8/	1	**	3	0	0	0	0	0	0	0	0	0	0	1	0	0	0
-36/	1	**	2	1	0	0	0	0	0	0	0	0	1	0	0	0	0
-48/	1	**	2	0	1	0	0	0	0	0	0	1	0	0	0	0	0
-60/	1	**	2	0	0	1	0	0	0	0	1	0	0	0	0	0	0
-72/	1	**	2	0	0	0	1	0	0	1	0	0	0	0	0	0	0

UNCLASSIFIED

-81/	1	**	2	0	0	0	0	1	1	0	0	0	0	0	0	0	0
-54/	1	**	1	2	0	0	0	0	0	0	0	1	0	0	0	0	0
-144/	1	**	1	1	1	0	0	0	0	0	1	0	0	0	0	0	0
-180/	1	**	1	1	0	1	0	0	0	1	0	0	0	0	0	0	0
-210/	1	**	1	1	0	0	1	0	1	0	0	0	0	0	0	0	0
-111/	1	**	1	1	0	0	0	2	0	0	0	0	0	0	0	0	0
-96/	1	**	1	0	2	0	0	0	0	1	0	0	0	0	0	0	0
-234/	1	**	1	0	1	1	0	0	1	0	0	0	0	0	0	0	0
-258/	1	**	1	0	1	0	1	1	0	0	0	0	0	0	0	0	0
-135/	1	**	1	0	0	2	0	1	0	0	0	0	0	0	0	0	0
-141/	1	**	1	0	0	1	2	0	0	0	0	0	0	0	0	0	0
-27/	1	**	0	3	0	0	0	0	0	0	1	0	0	0	0	0	0
-108/	1	**	0	2	1	0	0	0	0	1	0	0	0	0	0	0	0
-132/	1	**	0	2	0	1	0	0	1	0	0	0	0	0	0	0	0
-147/	1	**	0	2	0	0	1	1	0	0	0	0	0	0	0	0	0
-141/	1	**	0	1	2	0	0	0	1	0	0	0	0	0	0	0	0
-330/	1	**	0	1	1	1	0	1	0	0	0	0	0	0	0	0	0
-174/	1	**	0	1	1	0	2	0	0	0	0	0	0	0	0	0	0
-183/	1	**	0	1	0	2	1	0	0	0	0	0	0	0	0	0	0
-59/	1	**	0	0	3	0	0	1	0	0	0	0	0	0	0	0	0
-198/	1	**	0	0	2	1	1	0	0	0	0	0	0	0	0	0	0
-70/	1	**	0	0	1	3	0	0	0	0	0	0	0	0	0	0	0
16/	1	**	4	0	0	0	0	0	0	0	0	0	1	0	0	0	0
96/	1	**	3	1	0	0	0	0	0	0	0	1	0	0	0	0	0
128/	1	**	3	0	1	0	0	0	0	0	1	0	0	0	0	0	0
160/	1	**	3	0	0	1	0	0	0	1	0	0	0	0	0	0	0
188/	1	**	3	0	0	0	1	0	1	0	0	0	0	0	0	0	0
100/	1	**	3	0	0	0	0	2	0	0	0	0	0	0	0	0	0
216/	1	**	2	2	0	0	0	0	0	0	1	0	0	0	0	0	0
576/	1	**	2	1	1	0	0	0	0	1	0	0	0	0	0	0	0
708/	1	**	2	1	0	1	0	0	1	0	0	0	0	0	0	0	0
792/	1	**	2	1	0	0	1	1	0	0	0	0	0	0	0	0	0
378/	1	**	2	0	2	0	0	0	1	0	0	0	0	0	0	0	0
888/	1	**	2	0	1	1	0	1	0	0	0	0	0	0	0	0	0
468/	1	**	2	0	1	0	2	0	0	0	0	0	0	0	0	0	0
492/	1	**	2	0	0	2	1	0	0	0	0	0	0	0	0	0	0
216/	1	**	1	3	0	0	0	0	0	1	0	0	0	0	0	0	0
852/	1	**	1	2	1	0	0	0	1	0	0	0	0	0	0	0	0
1008/	1	**	1	2	0	1	0	1	0	0	0	0	0	0	0	0	0
534/	1	**	1	2	0	0	2	0	0	0	0	0	0	0	0	0	0
1080/	1	**	1	1	2	0	0	1	0	0	0	0	0	0	0	0	0
2424/	1	**	1	1	1	1	1	0	0	0	0	0	0	0	0	0	0
428/	1	**	1	1	0	3	0	0	0	0	0	0	0	0	0	0	0
436/	1	**	1	0	3	0	1	0	0	0	0	0	0	0	0	0	0
696/	1	**	1	0	2	2	0	0	0	0	0	0	0	0	0	0	0
80/	1	**	0	4	0	0	0	0	1	0	0	0	0	0	0	0	0
408/	1	**	0	3	1	0	0	1	0	0	0	0	0	0	0	0	0
460/	1	**	0	3	0	1	1	0	0	0	0	0	0	0	0	0	0
744/	1	**	0	2	2	0	1	0	0	0	0	0	0	0	0	0	0
792/	1	**	0	2	1	2	0	0	0	0	0	0	0	0	0	0	0
572/	1	**	0	1	3	1	0	0	0	0	0	0	0	0	0	0	0
31/	1	**	0	0	5	0	0	0	0	0	0	0	0	0	0	0	0
-32/	1	**	5	0	0	0	0	0	0	0	0	1	0	0	0	0	0
-240/	1	**	4	1	0	0	0	0	0	0	1	0	0	0	0	0	0
-320/	1	**	4	0	1	0	0	0	0	1	0	0	0	0	0	0	0
-395/	1	**	4	0	0	1	0	0	1	0	0	0	0	0	0	0	0
-445/	1	**	4	0	0	0	1	1	0	0	0	0	0	0	0	0	0
-720/	1	**	3	2	0	0	0	0	0	1	0	0	0	0	0	0	0
-1900/	1	**	3	1	1	0	0	0	1	0	0	0	0	0	0	0	0
-2260/	1	**	3	1	0	1	0	1	0	0	0	0	0	0	0	0	0
-1200/	1	**	3	1	0	0	2	0	0	0	0	0	0	0	0	0	0
-1210/	1	**	3	0	2	0	0	1	0	0	0	0	0	0	0	0	0
-2720/	1	**	3	0	1	1	1	0	0	0	0	0	0	0	0	0	0
-480/	1	**	3	0	0	3	0	0	0	0	0	0	0	0	0	0	0
-1070/	1	**	2	3	0	0	0	0	1	0	0	0	0	0	0	0	0
-4110/	1	**	2	2	1	0	0	1	0	0	0	0	0	0	0	0	0

-4650/	1	**	2	2	0	1	1	0	0	0	0	0	0	0	0	0	0
-5010/	1	**	2	1	2	0	1	0	0	0	0	0	0	0	0	0	0
-5340/	1	**	2	1	1	2	0	0	0	0	0	0	0	0	0	0	0
-1930/	1	**	2	0	3	1	0	0	0	0	0	0	0	0	0	0	0
-775/	1	**	1	4	0	0	0	1	0	0	0	0	0	0	0	0	0
-3800/	1	**	1	3	1	0	1	0	0	0	0	0	0	0	0	0	0
-2030/	1	**	1	3	0	2	0	0	0	0	0	0	0	0	0	0	0
-6600/	1	**	1	2	2	1	0	0	0	0	0	0	0	0	0	0	0
-1195/	1	**	1	1	4	0	0	0	0	0	0	0	0	0	0	0	0
-216/	1	**	0	5	0	0	1	0	0	0	0	0	0	0	0	0	0
-1255/	1	**	0	4	1	1	0	0	0	0	0	0	0	0	0	0	0
-910/	1	**	0	3	3	0	0	0	0	0	0	0	0	0	0	0	0
64/	1	**	6	0	0	0	0	0	0	0	1	0	0	0	0	0	0
576/	1	**	5	1	0	0	0	0	0	1	0	0	0	0	0	0	0
762/	1	**	5	0	1	0	0	0	1	0	0	0	0	0	0	0	0
912/	1	**	5	0	0	1	0	1	0	0	0	0	0	0	0	0	0
486/	1	**	5	0	0	0	2	0	0	0	0	0	0	0	0	0	0
2145/	1	**	4	2	0	0	0	0	1	0	0	0	0	0	0	0	0
5520/	1	**	4	1	1	0	0	1	0	0	0	0	0	0	0	0	0
6270/	1	**	4	1	0	1	1	0	0	0	0	0	0	0	0	0	0
3375/	1	**	4	0	2	0	1	0	0	0	0	0	0	0	0	0	0
3600/	1	**	4	0	1	2	0	0	0	0	0	0	0	0	0	0	0
4160/	1	**	3	3	0	0	0	1	0	0	0	0	0	0	0	0	0
15360/	1	**	3	2	1	0	1	0	0	0	0	0	0	0	0	0	0
8220/	1	**	3	2	0	2	0	0	0	0	0	0	0	0	0	0	0
17820/	1	**	3	1	2	1	0	0	0	0	0	0	0	0	0	0	0
1615/	1	**	3	0	4	0	0	0	0	0	0	0	0	0	0	0	0
4365/	1	**	2	4	0	0	1	0	0	0	0	0	0	0	0	0	0
20340/	1	**	2	3	1	1	0	0	0	0	0	0	0	0	0	0	0
11070/	1	**	2	2	3	0	0	0	0	0	0	0	0	0	0	0	0
2322/	1	**	1	5	0	1	0	0	0	0	0	0	0	0	0	0	0
6330/	1	**	1	4	2	0	0	0	0	0	0	0	0	0	0	0	0
483/	1	**	0	6	1	0	0	0	0	0	0	0	0	0	0	0	0
-128/	1	**	7	0	0	0	0	0	0	1	0	0	0	0	0	0	0
-1337/	1	**	6	1	0	0	0	0	1	0	0	0	0	0	0	0	0
-1729/	1	**	6	0	1	0	0	1	0	0	0	0	0	0	0	0	0
-1974/	1	**	6	0	0	1	1	0	0	0	0	0	0	0	0	0	0
-5859/	1	**	5	2	0	0	0	1	0	0	0	0	0	0	0	0	0
-14490/	1	**	5	1	1	0	1	0	0	0	0	0	0	0	0	0	0
-7770/	1	**	5	1	0	2	0	0	0	0	0	0	0	0	0	0	0
-8421/	1	**	5	0	2	1	0	0	0	0	0	0	0	0	0	0	0
-13720/	1	**	4	3	0	0	1	0	0	0	0	0	0	0	0	0	0
-48090/	1	**	4	2	1	1	0	0	0	0	0	0	0	0	0	0	0
-17465/	1	**	4	1	3	0	0	0	0	0	0	0	0	0	0	0	0
-18305/	1	**	3	4	0	1	0	0	0	0	0	0	0	0	0	0	0
-39970/	1	**	3	3	2	0	0	0	0	0	0	0	0	0	0	0	0
-13734/	1	**	2	5	1	0	0	0	0	0	0	0	0	0	0	0	0
-750/	1	**	1	7	0	0	0	0	0	0	0	0	0	0	0	0	0
255/	1	**	8	0	0	0	0	0	1	0	0	0	0	0	0	0	0
2992/	1	**	7	1	0	0	0	1	0	0	0	0	0	0	0	0	0
3720/	1	**	7	0	1	0	1	0	0	0	0	0	0	0	0	0	0
2000/	1	**	7	0	0	2	0	0	0	0	0	0	0	0	0	0	0
14784/	1	**	6	2	0	0	1	0	0	0	0	0	0	0	0	0	0
34664/	1	**	6	1	1	1	0	0	0	0	0	0	0	0	0	0	0
6300/	1	**	6	0	3	0	0	0	0	0	0	0	0	0	0	0	0
39592/	1	**	5	3	0	1	0	0	0	0	0	0	0	0	0	0	0
64932/	1	**	5	2	2	0	0	0	0	0	0	0	0	0	0	0	0
62020/	1	**	4	4	1	0	0	0	0	0	0	0	0	0	0	0	0
9492/	1	**	3	6	0	0	0	0	0	0	0	0	0	0	0	0	0
-501/	1	**	9	0	0	0	0	1	0	0	0	0	0	0	0	0	0
-6399/	1	**	8	1	0	0	1	0	0	0	0	0	0	0	0	0	0
-7533/	1	**	8	0	1	1	0	0	0	0	0	0	0	0	0	0	0
-34416/	1	**	7	2	0	1	0	0	0	0	0	0	0	0	0	0	0
-37692/	1	**	7	1	2	0	0	0	0	0	0	0	0	0	0	0	0
-100884/	1	**	6	3	1	0	0	0	0	0	0	0	0	0	0	0	0

UNCLASSIFIED

-34776/	1	**	5	5	0	0	0	0	0	0	0	0	0	0	0	0	0
957/	1	**	10	0	0	0	1	0	0	0	0	0	0	0	0	0	0
12930/	1	**	9	1	0	1	0	0	0	0	0	0	0	0	0	0	0
7095/	1	**	9	0	2	0	0	0	0	0	0	0	0	0	0	0	0
73305/	1	**	8	2	1	0	0	0	0	0	0	0	0	0	0	0	0
56220/	1	**	7	4	0	0	0	0	0	0	0	0	0	0	0	0	0
-1749/	1	**	11	0	0	1	0	0	0	0	0	0	0	0	0	0	0
-24321/	1	**	10	1	1	0	0	0	0	0	0	0	0	0	0	0	0
-46695/	1	**	9	3	0	0	0	0	0	0	0	0	0	0	0	0	0
3003/	1	**	12	0	1	0	0	0	0	0	0	0	0	0	0	0	0
20790/	1	**	11	2	0	0	0	0	0	0	0	0	0	0	0	0	0
-4719/	1	**	13	1	0	0	0	0	0	0	0	0	0	0	0	0	0
429/	1	**	15	0	0	0	0	0	0	0	0	0	0	0	0	0	0

P= 1

C 7 9 =

1/	1	**	0	0	0	0	0	0	0	0	0	0	0	0	0	0	0	1
-2/	1	**	1	0	0	0	0	0	0	0	0	0	0	0	0	0	1	0
-3/	1	**	0	1	0	0	0	0	0	0	0	0	0	0	0	1	0	0
-4/	1	**	0	0	1	0	0	0	0	0	0	0	0	0	1	0	0	0
-5/	1	**	0	0	0	1	0	0	0	0	0	0	0	1	0	0	0	0
-6/	1	**	0	0	0	0	1	0	0	0	0	0	1	0	0	0	0	0
-7/	1	**	0	0	0	0	0	1	0	0	0	1	0	0	0	0	0	0
-8/	1	**	0	0	0	0	0	0	1	0	1	0	0	0	0	0	0	0
-4/	1	**	0	0	0	0	0	0	0	2	0	0	0	0	0	0	0	0
4/	1	**	2	0	0	0	0	0	0	0	0	0	0	0	0	1	0	0
12/	1	**	1	1	0	0	0	0	0	0	0	0	0	0	1	0	0	0
16/	1	**	1	0	1	0	0	0	0	0	0	0	0	1	0	0	0	0
20/	1	**	1	0	0	1	0	0	0	0	0	0	1	0	0	0	0	0
24/	1	**	1	0	0	0	1	0	0	0	0	1	0	0	0	0	0	0
28/	1	**	1	0	0	0	0	1	0	0	1	0	0	0	0	0	0	0
30/	1	**	1	0	0	0	0	0	1	1	0	0	0	0	0	0	0	0
9/	1	**	0	2	0	0	0	0	0	0	0	0	0	1	0	0	0	0
24/	1	**	0	1	1	0	0	0	0	0	0	0	1	0	0	0	0	0
30/	1	**	0	1	0	1	0	0	0	0	0	1	0	0	0	0	0	0
36/	1	**	0	1	0	0	1	0	0	0	1	0	0	0	0	0	0	0
40/	1	**	0	1	0	0	0	1	0	1	0	0	0	0	0	0	0	0
21/	1	**	0	1	0	0	0	0	2	0	0	0	0	0	0	0	0	0
16/	1	**	0	0	2	0	0	0	0	0	0	1	0	0	0	0	0	0
40/	1	**	0	0	1	1	0	0	0	0	1	0	0	0	0	0	0	0
46/	1	**	0	0	1	0	1	0	0	1	0	0	0	0	0	0	0	0
50/	1	**	0	0	1	0	0	1	1	0	0	0	0	0	0	0	0	0
24/	1	**	0	0	0	2	0	0	0	1	0	0	0	0	0	0	0	0
54/	1	**	0	0	0	1	1	0	1	0	0	0	0	0	0	0	0	0
28/	1	**	0	0	0	1	0	2	0	0	0	0	0	0	0	0	0	0
29/	1	**	0	0	0	0	2	1	0	0	0	0	0	0	0	0	0	0
-8/	1	**	3	0	0	0	0	0	0	0	0	0	0	0	1	0	0	0
-36/	1	**	2	1	0	0	0	0	0	0	0	0	0	1	0	0	0	0
-48/	1	**	2	0	1	0	0	0	0	0	0	0	1	0	0	0	0	0
-60/	1	**	2	0	0	1	0	0	0	0	0	1	0	0	0	0	0	0
-72/	1	**	2	0	0	0	1	0	0	0	1	0	0	0	0	0	0	0
-81/	1	**	2	0	0	0	0	1	0	1	0	0	0	0	0	0	0	0
-42/	1	**	2	0	0	0	0	0	2	0	0	0	0	0	0	0	0	0
-54/	1	**	1	2	0	0	0	0	0	0	0	0	1	0	0	0	0	0
-144/	1	**	1	1	1	0	0	0	0	0	0	1	0	0	0	0	0	0
-180/	1	**	1	1	0	1	0	0	0	0	1	0	0	0	0	0	0	0
-210/	1	**	1	1	0	0	1	0	0	1	0	0	0	0	0	0	0	0

-228/	1	**	1	1	0	0	0	1	1	0	0	0	0	0	0	0	0	0
-96/	1	**	1	0	2	0	0	0	0	0	1	0	0	0	0	0	0	0
-234/	1	**	1	0	1	1	0	0	0	1	0	0	0	0	0	0	0	0
-264/	1	**	1	0	1	0	1	0	1	0	0	0	0	0	0	0	0	0
-138/	1	**	1	0	1	0	0	2	0	0	0	0	0	0	0	0	0	0
-138/	1	**	1	0	0	2	0	0	1	0	0	0	0	0	0	0	0	0
-300/	1	**	1	0	0	1	1	1	0	0	0	0	0	0	0	0	0	0
-52/	1	**	1	0	0	0	3	0	0	0	0	0	0	0	0	0	0	0
-27/	1	**	0	3	0	0	0	0	0	0	0	1	0	0	0	0	0	0
-108/	1	**	0	2	1	0	0	0	0	0	1	0	0	0	0	0	0	0
-132/	1	**	0	2	0	1	0	0	0	1	0	0	0	0	0	0	0	0
-150/	1	**	0	2	0	0	1	0	1	0	0	0	0	0	0	0	0	0
-78/	1	**	0	2	0	0	0	2	0	0	0	0	0	0	0	0	0	0
-141/	1	**	0	1	2	0	0	0	0	1	0	0	0	0	0	0	0	0
-336/	1	**	0	1	1	1	0	0	1	0	0	0	0	0	0	0	0	0
-366/	1	**	0	1	1	0	1	1	0	0	0	0	0	0	0	0	0	0
-192/	1	**	0	1	0	2	0	1	0	0	0	0	0	0	0	0	0	0
-201/	1	**	0	1	0	1	2	0	0	0	0	0	0	0	0	0	0	0
-60/	1	**	0	0	3	0	0	0	1	0	0	0	0	0	0	0	0	0
-207/	1	**	0	0	2	1	0	1	0	0	0	0	0	0	0	0	0	0
-108/	1	**	0	0	2	0	2	0	0	0	0	0	0	0	0	0	0	0
-228/	1	**	0	0	1	2	1	0	0	0	0	0	0	0	0	0	0	0
-20/	1	**	0	0	0	4	0	0	0	0	0	0	0	0	0	0	0	0
16/	1	**	4	0	0	0	0	0	0	0	0	0	0	1	0	0	0	0
96/	1	**	3	1	0	0	0	0	0	0	0	0	1	0	0	0	0	0
128/	1	**	3	0	1	0	0	0	0	0	0	1	0	0	0	0	0	0
160/	1	**	3	0	0	1	0	0	0	0	1	0	0	0	0	0	0	0
188/	1	**	3	0	0	0	1	0	0	1	0	0	0	0	0	0	0	0
204/	1	**	3	0	0	0	0	1	1	0	0	0	0	0	0	0	0	0
216/	1	**	2	2	0	0	0	0	0	0	0	1	0	0	0	0	0	0
576/	1	**	2	1	1	0	0	0	0	0	1	0	0	0	0	0	0	0
708/	1	**	2	1	0	1	0	0	0	1	0	0	0	0	0	0	0	0
804/	1	**	2	1	0	0	1	0	1	0	0	0	0	0	0	0	0	0
420/	1	**	2	1	0	0	0	2	0	0	0	0	0	0	0	0	0	0
378/	1	**	2	0	2	0	0	0	0	1	0	0	0	0	0	0	0	0
900/	1	**	2	0	1	1	0	0	1	0	0	0	0	0	0	0	0	0
984/	1	**	2	0	1	0	1	1	0	0	0	0	0	0	0	0	0	0
516/	1	**	2	0	0	2	0	1	0	0	0	0	0	0	0	0	0	0
540/	1	**	2	0	0	1	2	0	0	0	0	0	0	0	0	0	0	0
216/	1	**	1	3	0	0	0	0	0	0	1	0	0	0	0	0	0	0
852/	1	**	1	2	1	0	0	0	0	1	0	0	0	0	0	0	0	0
1020/	1	**	1	2	0	1	0	0	1	0	0	0	0	0	0	0	0	0
1116/	1	**	1	2	0	0	1	1	0	0	0	0	0	0	0	0	0	0
1092/	1	**	1	1	2	0	0	0	1	0	0	0	0	0	0	0	0	0
2520/	1	**	1	1	1	1	0	1	0	0	0	0	0	0	0	0	0	0
1320/	1	**	1	1	1	0	2	0	0	0	0	0	0	0	0	0	0	0
1392/	1	**	1	1	0	2	1	0	0	0	0	0	0	0	0	0	0	0
452/	1	**	1	0	3	0	0	1	0	0	0	0	0	0	0	0	0	0
1500/	1	**	1	0	2	1	1	0	0	0	0	0	0	0	0	0	0	0
528/	1	**	1	0	1	3	0	0	0	0	0	0	0	0	0	0	0	0
80/	1	**	0	4	0	0	0	0	0	1	0	0	0	0	0	0	0	0
412/	1	**	0	3	1	0	0	0	1	0	0	0	0	0	0	0	0	0
476/	1	**	0	3	0	1	0	1	0	0	0	0	0	0	0	0	0	0
250/	1	**	0	3	0	0	2	0	0	0	0	0	0	0	0	0	0	0
768/	1	**	0	2	2	0	0	1	0	0	0	0	0	0	0	0	0	0
1704/	1	**	0	2	1	1	1	0	0	0	0	0	0	0	0	0	0	0
300/	1	**	0	2	0	3	0	0	0	0	0	0	0	0	0	0	0	0
612/	1	**	0	1	3	0	1	0	0	0	0	0	0	0	0	0	0	0
972/	1	**	0	1	2	2	0	0	0	0	0	0	0	0	0	0	0	0
175/	1	**	0	0	4	1	0	0	0	0	0	0	0	0	0	0	0	0
-32/	1	**	5	0	0	0	0	0	0	0	0	0	1	0	0	0	0	0
-240/	1	**	4	1	0	0	0	0	0	0	0	1	0	0	0	0	0	0
-320/	1	**	4	0	1	0	0	0	0	0	1	0	0	0	0	0	0	0
-395/	1	**	4	0	0	1	0	0	0	1	0	0	0	0	0	0	0	0
-450/	1	**	4	0	0	0	1	0	1	0	0	0	0	0	0	0	0	0

UNCLASSIFIED

-235/	1	**	4	0	0	0	0	2	0	0	0	0	0	0	0	0	0	0
-720/	1	**	3	2	0	0	0	0	0	0	1	0	0	0	0	0	0	0
-1900/	1	**	3	1	1	0	0	0	0	1	0	0	0	0	0	0	0	0
-2280/	1	**	3	1	0	1	0	0	1	0	0	0	0	0	0	0	0	0
-2500/	1	**	3	1	0	0	1	1	0	0	0	0	0	0	0	0	0	0
-1220/	1	**	3	0	2	0	0	0	1	0	0	0	0	0	0	0	0	0
-2820/	1	**	3	0	1	1	0	1	0	0	0	0	0	0	0	0	0	0
-1480/	1	**	3	0	1	0	2	0	0	0	0	0	0	0	0	0	0	0
-1560/	1	**	3	0	0	2	1	0	0	0	0	0	0	0	0	0	0	0
-1070/	1	**	2	3	0	0	0	0	0	1	0	0	0	0	0	0	0	0
-4140/	1	**	2	2	1	0	0	0	1	0	0	0	0	0	0	0	0	0
-4800/	1	**	2	2	0	1	0	1	0	0	0	0	0	0	0	0	0	0
-2520/	1	**	2	2	0	0	2	0	0	0	0	0	0	0	0	0	0	0
-5160/	1	**	2	1	2	0	0	1	0	0	0	0	0	0	0	0	0	0
-11460/	1	**	2	1	1	1	1	0	0	0	0	0	0	0	0	0	0	0
-2020/	1	**	2	1	0	3	0	0	0	0	0	0	0	0	0	0	0	0
-2060/	1	**	2	0	3	0	1	0	0	0	0	0	0	0	0	0	0	0
-3270/	1	**	2	0	2	2	0	0	0	0	0	0	0	0	0	0	0	0
-780/	1	**	1	4	0	0	0	0	1	0	0	0	0	0	0	0	0	0
-3900/	1	**	1	3	1	0	0	1	0	0	0	0	0	0	0	0	0	0
-4340/	1	**	1	3	0	1	1	0	0	0	0	0	0	0	0	0	0	0
-7020/	1	**	1	2	2	0	1	0	0	0	0	0	0	0	0	0	0	0
-7440/	1	**	1	2	1	2	0	0	0	0	0	0	0	0	0	0	0	0
-5360/	1	**	1	1	3	1	0	0	0	0	0	0	0	0	0	0	0	0
-290/	1	**	1	0	5	0	0	0	0	0	0	0	0	0	0	0	0	0
-221/	1	**	0	5	0	0	0	1	0	0	0	0	0	0	0	0	0	0
-1330/	1	**	0	4	1	0	1	0	0	0	0	0	0	0	0	0	0	0
-705/	1	**	0	4	0	2	0	0	0	0	0	0	0	0	0	0	0	0
-3050/	1	**	0	3	2	1	0	0	0	0	0	0	0	0	0	0	0	0
-825/	1	**	0	2	4	0	0	0	0	0	0	0	0	0	0	0	0	0
64/	1	**	6	0	0	0	0	0	0	0	0	1	0	0	0	0	0	0
576/	1	**	5	1	0	0	0	0	0	0	1	0	0	0	0	0	0	0
762/	1	**	5	0	1	0	0	0	0	1	0	0	0	0	0	0	0	0
918/	1	**	5	0	0	1	0	0	1	0	0	0	0	0	0	0	0	0
1008/	1	**	5	0	0	0	1	1	0	0	0	0	0	0	0	0	0	0
2145/	1	**	4	2	0	0	0	0	0	1	0	0	0	0	0	0	0	0
5550/	1	**	4	1	1	0	0	0	1	0	0	0	0	0	0	0	0	0
6450/	1	**	4	1	0	1	0	1	0	0	0	0	0	0	0	0	0	0
3390/	1	**	4	1	0	0	2	0	0	0	0	0	0	0	0	0	0	0
3465/	1	**	4	0	2	0	0	1	0	0	0	0	0	0	0	0	0	0
7710/	1	**	4	0	1	1	1	0	0	0	0	0	0	0	0	0	0	0
1360/	1	**	4	0	0	3	0	0	0	0	0	0	0	0	0	0	0	0
4180/	1	**	3	3	0	0	0	0	1	0	0	0	0	0	0	0	0	0
15720/	1	**	3	2	1	0	0	1	0	0	0	0	0	0	0	0	0	0
17520/	1	**	3	2	0	1	1	0	0	0	0	0	0	0	0	0	0	0
18900/	1	**	3	1	2	0	1	0	0	0	0	0	0	0	0	0	0	0
20040/	1	**	3	1	1	2	0	0	0	0	0	0	0	0	0	0	0	0
7220/	1	**	3	0	3	1	0	0	0	0	0	0	0	0	0	0	0	0
4455/	1	**	2	4	0	0	0	1	0	0	0	0	0	0	0	0	0	0
21480/	1	**	2	3	1	0	1	0	0	0	0	0	0	0	0	0	0	0
11400/	1	**	2	3	0	2	0	0	0	0	0	0	0	0	0	0	0	0
36990/	1	**	2	2	2	1	0	0	0	0	0	0	0	0	0	0	0	0
6675/	1	**	2	1	4	0	0	0	0	0	0	0	0	0	0	0	0	0
2442/	1	**	1	5	0	0	1	0	0	0	0	0	0	0	0	0	0	0
14040/	1	**	1	4	1	1	0	0	0	0	0	0	0	0	0	0	0	0
10140/	1	**	1	3	3	0	0	0	0	0	0	0	0	0	0	0	0	0
533/	1	**	0	6	0	1	0	0	0	0	0	0	0	0	0	0	0	0
1734/	1	**	0	5	2	0	0	0	0	0	0	0	0	0	0	0	0	0
-128/	1	**	7	0	0	0	0	0	0	0	1	0	0	0	0	0	0	0
-1337/	1	**	6	1	0	0	0	0	0	1	0	0	0	0	0	0	0	0
-1736/	1	**	6	0	1	0	0	0	1	0	0	0	0	0	0	0	0	0
-2023/	1	**	6	0	0	1	0	1	0	0	0	0	0	0	0	0	0	0
-1064/	1	**	6	0	0	0	2	0	0	0	0	0	0	0	0	0	0	0
-5880/	1	**	5	2	0	0	0	0	1	0	0	0	0	0	0	0	0	0
-14784/	1	**	5	1	1	0	0	1	0	0	0	0	0	0	0	0	0	0

-16506/	1	**	5	1	0	1	1	0	0	0	0	0	0	0	0	0	0	0
-8904/	1	**	5	0	2	0	1	0	0	0	0	0	0	0	0	0	0	0
-9450/	1	**	5	0	1	2	0	0	0	0	0	0	0	0	0	0	0	0
-13965/	1	**	4	3	0	0	0	1	0	0	0	0	0	0	0	0	0	0
-50610/	1	**	4	2	1	0	1	0	0	0	0	0	0	0	0	0	0	0
-26880/	1	**	4	2	0	2	0	0	0	0	0	0	0	0	0	0	0	0
-58170/	1	**	4	1	2	1	0	0	0	0	0	0	0	0	0	0	0	0
-5250/	1	**	4	0	4	0	0	0	0	0	0	0	0	0	0	0	0	0
-19180/	1	**	3	4	0	0	1	0	0	0	0	0	0	0	0	0	0	0
-88340/	1	**	3	3	1	1	0	0	0	0	0	0	0	0	0	0	0	0
-47880/	1	**	3	2	3	0	0	0	0	0	0	0	0	0	0	0	0	0
-15099/	1	**	2	5	0	1	0	0	0	0	0	0	0	0	0	0	0	0
-40950/	1	**	2	4	2	0	0	0	0	0	0	0	0	0	0	0	0	0
-6230/	1	**	1	6	1	0	0	0	0	0	0	0	0	0	0	0	0	0
-127/	1	**	0	8	0	0	0	0	0	0	0	0	0	0	0	0	0	0
255/	1	**	8	0	0	0	0	0	0	1	0	0	0	0	0	0	0	0
3000/	1	**	7	1	0	0	0	0	1	0	0	0	0	0	0	0	0	0
3784/	1	**	7	0	1	0	0	1	0	0	0	0	0	0	0	0	0	0
4232/	1	**	7	0	0	1	1	0	0	0	0	0	0	0	0	0	0	0
15008/	1	**	6	2	0	0	0	1	0	0	0	0	0	0	0	0	0	0
36344/	1	**	6	1	1	0	1	0	0	0	0	0	0	0	0	0	0	0
19320/	1	**	6	1	0	2	0	0	0	0	0	0	0	0	0	0	0	0
20916/	1	**	6	0	2	1	0	0	0	0	0	0	0	0	0	0	0	0
41328/	1	**	5	3	0	0	1	0	0	0	0	0	0	0	0	0	0	0
142968/	1	**	5	2	1	1	0	0	0	0	0	0	0	0	0	0	0	0
51688/	1	**	5	1	3	0	0	0	0	0	0	0	0	0	0	0	0	0
67900/	1	**	4	4	0	1	0	0	0	0	0	0	0	0	0	0	0	0
147420/	1	**	4	3	2	0	0	0	0	0	0	0	0	0	0	0	0	0
67312/	1	**	3	5	1	0	0	0	0	0	0	0	0	0	0	0	0	0
5492/	1	**	2	7	0	0	0	0	0	0	0	0	0	0	0	0	0	0
-502/	1	**	9	0	0	0	0	0	1	0	0	0	0	0	0	0	0	0
-6480/	1	**	8	1	0	0	0	1	0	0	0	0	0	0	0	0	0	0
-7866/	1	**	8	0	1	0	1	0	0	0	0	0	0	0	0	0	0	0
-4185/	1	**	8	0	0	2	0	0	0	0	0	0	0	0	0	0	0	0
-35784/	1	**	7	2	0	0	1	0	0	0	0	0	0	0	0	0	0	0
-82656/	1	**	7	1	1	1	0	0	0	0	0	0	0	0	0	0	0	0
-14952/	1	**	7	0	3	0	0	0	0	0	0	0	0	0	0	0	0	0
-109956/	1	**	6	3	0	1	0	0	0	0	0	0	0	0	0	0	0	0
-179172/	1	**	6	2	2	0	0	0	0	0	0	0	0	0	0	0	0	0
-204624/	1	**	5	4	1	0	0	0	0	0	0	0	0	0	0	0	0	0
-38976/	1	**	4	6	0	0	0	0	0	0	0	0	0	0	0	0	0	0
967/	1	**	10	0	0	0	0	1	0	0	0	0	0	0	0	0	0	0
13390/	1	**	9	1	0	0	1	0	0	0	0	0	0	0	0	0	0	0
15490/	1	**	9	0	1	1	0	0	0	0	0	0	0	0	0	0	0	0
79515/	1	**	8	2	0	1	0	0	0	0	0	0	0	0	0	0	0	0
86445/	1	**	8	1	2	0	0	0	0	0	0	0	0	0	0	0	0	0
263400/	1	**	7	3	1	0	0	0	0	0	0	0	0	0	0	0	0	0
105420/	1	**	6	5	0	0	0	0	0	0	0	0	0	0	0	0	0	0
-1804/	1	**	11	0	0	0	1	0	0	0	0	0	0	0	0	0	0	0
-26246/	1	**	10	1	0	1	0	0	0	0	0	0	0	0	0	0	0	0
-14278/	1	**	10	0	2	0	0	0	0	0	0	0	0	0	0	0	0	0
-163240/	1	**	9	2	1	0	0	0	0	0	0	0	0	0	0	0	0	0
-140085/	1	**	8	4	0	0	0	0	0	0	0	0	0	0	0	0	0	0
3223/	1	**	12	0	0	1	0	0	0	0	0	0	0	0	0	0	0	0
48180/	1	**	11	1	1	0	0	0	0	0	0	0	0	0	0	0	0	0
101134/	1	**	10	3	0	0	0	0	0	0	0	0	0	0	0	0	0	0
-5434/	1	**	13	0	1	0	0	0	0	0	0	0	0	0	0	0	0	0
-40469/	1	**	12	2	0	0	0	0	0	0	0	0	0	0	0	0	0	0
8437/	1	**	14	1	0	0	0	0	0	0	0	0	0	0	0	0	0	0
-715/	1	**	16	0	0	0	0	0	0	0	0	0	0	0	0	0	0	0

UNCLASSIFIED

P= 1

C 8 8 =

1/	1	**	0	0	0	0	0	0	0	0	0	0	0	0	0	0	0	1
-2/	1	**	1	0	0	0	0	0	0	0	0	0	0	0	0	0	1	0
-3/	1	**	0	1	0	0	0	0	0	0	0	0	0	0	0	1	0	0
-4/	1	**	0	0	1	0	0	0	0	0	0	0	0	0	1	0	0	0
-5/	1	**	0	0	0	1	0	0	0	0	0	0	0	1	0	0	0	0
-6/	1	**	0	0	0	0	1	0	0	0	0	0	1	0	0	0	0	0
-7/	1	**	0	0	0	0	0	1	0	0	0	1	0	0	0	0	0	0
-8/	1	**	0	0	0	0	0	0	1	0	1	0	0	0	0	0	0	0
-9/	2	**	0	0	0	0	0	0	0	2	0	0	0	0	0	0	0	0
4/	1	**	2	0	0	0	0	0	0	0	0	0	0	0	0	1	0	0
12/	1	**	1	1	0	0	0	0	0	0	0	0	0	0	1	0	0	0
16/	1	**	1	0	1	0	0	0	0	0	0	0	0	1	0	0	0	0
20/	1	**	1	0	0	1	0	0	0	0	0	0	1	0	0	0	0	0
24/	1	**	1	0	0	0	1	0	0	0	0	1	0	0	0	0	0	0
28/	1	**	1	0	0	0	0	1	0	0	1	0	0	0	0	0	0	0
32/	1	**	1	0	0	0	0	0	1	1	0	0	0	0	0	0	0	0
9/	1	**	0	2	0	0	0	0	0	0	0	0	0	1	0	0	0	0
24/	1	**	0	1	1	0	0	0	0	0	0	0	1	0	0	0	0	0
30/	1	**	0	1	0	1	0	0	0	0	0	1	0	0	0	0	0	0
36/	1	**	0	1	0	0	1	0	0	0	1	0	0	0	0	0	0	0
42/	1	**	0	1	0	0	0	1	0	1	0	0	0	0	0	0	0	0
22/	1	**	0	1	0	0	0	0	2	0	0	0	0	0	0	0	0	0
16/	1	**	0	0	2	0	0	0	0	0	0	1	0	0	0	0	0	0
40/	1	**	0	0	1	1	0	0	0	0	1	0	0	0	0	0	0	0
48/	1	**	0	0	1	0	1	0	0	1	0	0	0	0	0	0	0	0
52/	1	**	0	0	1	0	0	1	1	0	0	0	0	0	0	0	0	0
25/	1	**	0	0	0	2	0	0	0	1	0	0	0	0	0	0	0	0
56/	1	**	0	0	0	1	1	0	1	0	0	0	0	0	0	0	0	0
29/	1	**	0	0	0	1	0	2	0	0	0	0	0	0	0	0	0	0
30/	1	**	0	0	0	0	2	1	0	0	0	0	0	0	0	0	0	0
-8/	1	**	3	0	0	0	0	0	0	0	0	0	0	0	1	0	0	0
-36/	1	**	2	1	0	0	0	0	0	0	0	0	0	1	0	0	0	0
-48/	1	**	2	0	1	0	0	0	0	0	0	0	1	0	0	0	0	0
-60/	1	**	2	0	0	1	0	0	0	0	0	1	0	0	0	0	0	0
-72/	1	**	2	0	0	0	1	0	0	0	1	0	0	0	0	0	0	0
-84/	1	**	2	0	0	0	0	1	0	1	0	0	0	0	0	0	0	0
-45/	1	**	2	0	0	0	0	0	2	0	0	0	0	0	0	0	0	0
-54/	1	**	1	2	0	0	0	0	0	0	0	0	1	0	0	0	0	0
-144/	1	**	1	1	1	0	0	0	0	0	0	1	0	0	0	0	0	0
-180/	1	**	1	1	0	1	0	0	0	0	1	0	0	0	0	0	0	0
-216/	1	**	1	1	0	0	1	0	0	1	0	0	0	0	0	0	0	0
-240/	1	**	1	1	0	0	0	1	1	0	0	0	0	0	0	0	0	0
-96/	1	**	1	0	2	0	0	0	0	0	1	0	0	0	0	0	0	0
-240/	1	**	1	0	1	1	0	0	0	1	0	0	0	0	0	0	0	0
-276/	1	**	1	0	1	0	1	0	1	0	0	0	0	0	0	0	0	0
-144/	1	**	1	0	1	0	0	2	0	0	0	0	0	0	0	0	0	0
-144/	1	**	1	0	0	2	0	0	1	0	0	0	0	0	0	0	0	0
-312/	1	**	1	0	0	1	1	1	0	0	0	0	0	0	0	0	0	0
-54/	1	**	1	0	0	0	3	0	0	0	0	0	0	0	0	0	0	0
-27/	1	**	0	3	0	0	0	0	0	0	0	1	0	0	0	0	0	0
-108/	1	**	0	2	1	0	0	0	0	0	1	0	0	0	0	0	0	0
-135/	1	**	0	2	0	1	0	0	0	1	0	0	0	0	0	0	0	0
-156/	1	**	0	2	0	0	1	0	1	0	0	0	0	0	0	0	0	0
-165/	2	**	0	2	0	0	0	2	0	0	0	0	0	0	0	0	0	0
-144/	1	**	0	1	2	0	0	0	0	1	0	0	0	0	0	0	0	0
-348/	1	**	0	1	1	1	0	0	1	0	0	0	0	0	0	0	0	0
-384/	1	**	0	1	1	0	1	1	0	0	0	0	0	0	0	0	0	0
-201/	1	**	0	1	0	2	0	1	0	0	0	0	0	0	0	0	0	0
-210/	1	**	0	1	0	1	2	0	0	0	0	0	0	0	0	0	0	0

-62/	1	**	0	0	3	0	0	0	1	0	0	0	0	0	0	0	0	0
-216/	1	**	0	0	2	1	0	1	0	0	0	0	0	0	0	0	0	0
-114/	1	**	0	0	2	0	2	0	0	0	0	0	0	0	0	0	0	0
-240/	1	**	0	0	1	2	1	0	0	0	0	0	0	0	0	0	0	0
-85/	4	**	0	0	0	4	0	0	0	0	0	0	0	0	0	0	0	0
16/	1	**	4	0	0	0	0	0	0	0	0	0	0	1	0	0	0	0
96/	1	**	3	1	0	0	0	0	0	0	0	0	1	0	0	0	0	0
128/	1	**	3	0	1	0	0	0	0	0	0	1	0	0	0	0	0	0
160/	1	**	3	0	0	1	0	0	0	0	1	0	0	0	0	0	0	0
192/	1	**	3	0	0	0	1	0	0	1	0	0	0	0	0	0	0	0
216/	1	**	3	0	0	0	0	1	1	0	0	0	0	0	0	0	0	0
216/	1	**	2	2	0	0	0	0	0	0	0	1	0	0	0	0	0	0
576/	1	**	2	1	1	0	0	0	0	0	1	0	0	0	0	0	0	0
720/	1	**	2	1	0	1	0	0	0	1	0	0	0	0	0	0	0	0
840/	1	**	2	1	0	0	1	0	1	0	0	0	0	0	0	0	0	0
444/	1	**	2	1	0	0	0	2	0	0	0	0	0	0	0	0	0	0
384/	1	**	2	0	2	0	0	0	0	1	0	0	0	0	0	0	0	0
936/	1	**	2	0	1	1	0	0	1	0	0	0	0	0	0	0	0	0
1032/	1	**	2	0	1	0	1	1	0	0	0	0	0	0	0	0	0	0
540/	1	**	2	0	0	2	0	1	0	0	0	0	0	0	0	0	0	0
564/	1	**	2	0	0	1	2	0	0	0	0	0	0	0	0	0	0	0
216/	1	**	1	3	0	0	0	0	0	0	1	0	0	0	0	0	0	0
864/	1	**	1	2	1	0	0	0	0	1	0	0	0	0	0	0	0	0
1056/	1	**	1	2	0	1	0	0	1	0	0	0	0	0	0	0	0	0
1176/	1	**	1	2	0	0	1	1	0	0	0	0	0	0	0	0	0	0
1128/	1	**	1	1	2	0	0	0	1	0	0	0	0	0	0	0	0	0
2640/	1	**	1	1	1	1	0	1	0	0	0	0	0	0	0	0	0	0
1392/	1	**	1	1	1	0	2	0	0	0	0	0	0	0	0	0	0	0
1464/	1	**	1	1	0	2	1	0	0	0	0	0	0	0	0	0	0	0
472/	1	**	1	0	3	0	0	1	0	0	0	0	0	0	0	0	0	0
1584/	1	**	1	0	2	1	1	0	0	0	0	0	0	0	0	0	0	0
560/	1	**	1	0	1	3	0	0	0	0	0	0	0	0	0	0	0	0
81/	1	**	0	4	0	0	0	0	0	1	0	0	0	0	0	0	0	0
424/	1	**	0	3	1	0	0	0	1	0	0	0	0	0	0	0	0	0
500/	1	**	0	3	0	1	0	1	0	0	0	0	0	0	0	0	0	0
264/	1	**	0	3	0	0	2	0	0	0	0	0	0	0	0	0	0	0
804/	1	**	0	2	2	0	0	1	0	0	0	0	0	0	0	0	0	0
1800/	1	**	0	2	1	1	1	0	0	0	0	0	0	0	0	0	0	0
318/	1	**	0	2	0	3	0	0	0	0	0	0	0	0	0	0	0	0
648/	1	**	0	1	3	0	1	0	0	0	0	0	0	0	0	0	0	0
1032/	1	**	0	1	2	2	0	0	0	0	0	0	0	0	0	0	0	0
186/	1	**	0	0	4	1	0	0	0	0	0	0	0	0	0	0	0	0
-32/	1	**	5	0	0	0	0	0	0	0	0	0	1	0	0	0	0	0
-240/	1	**	4	1	0	0	0	0	0	0	0	1	0	0	0	0	0	0
-320/	1	**	4	0	1	0	0	0	0	0	1	0	0	0	0	0	0	0
-400/	1	**	4	0	0	1	0	0	0	1	0	0	0	0	0	0	0	0
-470/	1	**	4	0	0	0	1	0	1	0	0	0	0	0	0	0	0	0
-250/	1	**	4	0	0	0	0	2	0	0	0	0	0	0	0	0	0	0
-720/	1	**	3	2	0	0	0	0	0	0	1	0	0	0	0	0	0	0
-1920/	1	**	3	1	1	0	0	0	0	1	0	0	0	0	0	0	0	0
-2360/	1	**	3	1	0	1	0	0	1	0	0	0	0	0	0	0	0	0
-2640/	1	**	3	1	0	0	1	1	0	0	0	0	0	0	0	0	0	0
-1260/	1	**	3	0	2	0	0	0	1	0	0	0	0	0	0	0	0	0
-2960/	1	**	3	0	1	1	0	1	0	0	0	0	0	0	0	0	0	0
-1560/	1	**	3	0	1	0	2	0	0	0	0	0	0	0	0	0	0	0
-1640/	1	**	3	0	0	2	1	0	0	0	0	0	0	0	0	0	0	0
-1080/	1	**	2	3	0	0	0	0	0	1	0	0	0	0	0	0	0	0
-4260/	1	**	2	2	1	0	0	0	1	0	0	0	0	0	0	0	0	0
-5040/	1	**	2	2	0	1	0	1	0	0	0	0	0	0	0	0	0	0
-2670/	1	**	2	2	0	0	2	0	0	0	0	0	0	0	0	0	0	0
-5400/	1	**	2	1	2	0	0	1	0	0	0	0	0	0	0	0	0	0
-12120/	1	**	2	1	1	1	1	0	0	0	0	0	0	0	0	0	0	0
-2140/	1	**	2	1	0	3	0	0	0	0	0	0	0	0	0	0	0	0
-2180/	1	**	2	0	3	0	1	0	0	0	0	0	0	0	0	0	0	0
-3480/	1	**	2	0	2	2	0	0	0	0	0	0	0	0	0	0	0	0

UNCLASSIFIED

-800/	1	**	1	4	0	0	0	0	1	0	0	0	0	0	0	0	0	0
-4080/	1	**	1	3	1	0	0	1	0	0	0	0	0	0	0	0	0	0
-4600/	1	**	1	3	0	1	1	0	0	0	0	0	0	0	0	0	0	0
-7440/	1	**	1	2	2	0	1	0	0	0	0	0	0	0	0	0	0	0
-7920/	1	**	1	2	1	2	0	0	0	0	0	0	0	0	0	0	0	0
-5720/	1	**	1	1	3	1	0	0	0	0	0	0	0	0	0	0	0	0
-310/	1	**	1	0	5	0	0	0	0	0	0	0	0	0	0	0	0	0
-231/	1	**	0	5	0	0	0	1	0	0	0	0	0	0	0	0	0	0
-1410/	1	**	0	4	1	0	1	0	0	0	0	0	0	0	0	0	0	0
-1505/	2	**	0	4	0	2	0	0	0	0	0	0	0	0	0	0	0	0
-3260/	1	**	0	3	2	1	0	0	0	0	0	0	0	0	0	0	0	0
-885/	1	**	0	2	4	0	0	0	0	0	0	0	0	0	0	0	0	0
64/	1	**	6	0	0	0	0	0	0	0	0	1	0	0	0	0	0	0
576/	1	**	5	1	0	0	0	0	0	0	1	0	0	0	0	0	0	0
768/	1	**	5	0	1	0	0	0	0	1	0	0	0	0	0	0	0	0
948/	1	**	5	0	0	1	0	0	1	0	0	0	0	0	0	0	0	0
1068/	1	**	5	0	0	0	1	1	0	0	0	0	0	0	0	0	0	0
2160/	1	**	4	2	0	0	0	0	0	1	0	0	0	0	0	0	0	0
5700/	1	**	4	1	1	0	0	0	1	0	0	0	0	0	0	0	0	0
6780/	1	**	4	1	0	1	0	1	0	0	0	0	0	0	0	0	0	0
3600/	1	**	4	1	0	0	2	0	0	0	0	0	0	0	0	0	0	0
3630/	1	**	4	0	2	0	0	1	0	0	0	0	0	0	0	0	0	0
8160/	1	**	4	0	1	1	1	0	0	0	0	0	0	0	0	0	0	0
1440/	1	**	4	0	0	3	0	0	0	0	0	0	0	0	0	0	0	0
4280/	1	**	3	3	0	0	0	0	1	0	0	0	0	0	0	0	0	0
16440/	1	**	3	2	1	0	0	1	0	0	0	0	0	0	0	0	0	0
18600/	1	**	3	2	0	1	1	0	0	0	0	0	0	0	0	0	0	0
20040/	1	**	3	1	2	0	1	0	0	0	0	0	0	0	0	0	0	0
21360/	1	**	3	1	1	2	0	0	0	0	0	0	0	0	0	0	0	0
7720/	1	**	3	0	3	1	0	0	0	0	0	0	0	0	0	0	0	0
4650/	1	**	2	4	0	0	0	1	0	0	0	0	0	0	0	0	0	0
22800/	1	**	2	3	1	0	1	0	0	0	0	0	0	0	0	0	0	0
12180/	1	**	2	3	0	2	0	0	0	0	0	0	0	0	0	0	0	0
39600/	1	**	2	2	2	1	0	0	0	0	0	0	0	0	0	0	0	0
7170/	1	**	2	1	4	0	0	0	0	0	0	0	0	0	0	0	0	0
2592/	1	**	1	5	0	0	1	0	0	0	0	0	0	0	0	0	0	0
15060/	1	**	1	4	1	1	0	0	0	0	0	0	0	0	0	0	0	0
10920/	1	**	1	3	3	0	0	0	0	0	0	0	0	0	0	0	0	0
573/	1	**	0	6	0	1	0	0	0	0	0	0	0	0	0	0	0	0
1872/	1	**	0	5	2	0	0	0	0	0	0	0	0	0	0	0	0	0
-128/	1	**	7	0	0	0	0	0	0	0	1	0	0	0	0	0	0	0
-1344/	1	**	6	1	0	0	0	0	0	1	0	0	0	0	0	0	0	0
-1778/	1	**	6	0	1	0	0	0	1	0	0	0	0	0	0	0	0	0
-2128/	1	**	6	0	0	1	0	1	0	0	0	0	0	0	0	0	0	0
-1134/	1	**	6	0	0	0	2	0	0	0	0	0	0	0	0	0	0	0
-6006/	1	**	5	2	0	0	0	0	1	0	0	0	0	0	0	0	0	0
-15456/	1	**	5	1	1	0	0	1	0	0	0	0	0	0	0	0	0	0
-17556/	1	**	5	1	0	1	1	0	0	0	0	0	0	0	0	0	0	0
-9450/	1	**	5	0	2	0	1	0	0	0	0	0	0	0	0	0	0	0
-10080/	1	**	5	0	1	2	0	0	0	0	0	0	0	0	0	0	0	0
-14560/	1	**	4	3	0	0	0	1	0	0	0	0	0	0	0	0	0	0
-53760/	1	**	4	2	1	0	1	0	0	0	0	0	0	0	0	0	0	0
-28770/	1	**	4	2	0	2	0	0	0	0	0	0	0	0	0	0	0	0
-62370/	1	**	4	1	2	1	0	0	0	0	0	0	0	0	0	0	0	0
-11305/	2	**	4	0	4	0	0	0	0	0	0	0	0	0	0	0	0	0
-20370/	1	**	3	4	0	0	1	0	0	0	0	0	0	0	0	0	0	0
-94920/	1	**	3	3	1	1	0	0	0	0	0	0	0	0	0	0	0	0
-51660/	1	**	3	2	3	0	0	0	0	0	0	0	0	0	0	0	0	0
-16254/	1	**	2	5	0	1	0	0	0	0	0	0	0	0	0	0	0	0
-44310/	1	**	2	4	2	0	0	0	0	0	0	0	0	0	0	0	0	0
-6762/	1	**	1	6	1	0	0	0	0	0	0	0	0	0	0	0	0	0
-1107/	8	**	0	8	0	0	0	0	0	0	0	0	0	0	0	0	0	0
256/	1	**	8	0	0	0	0	0	0	1	0	0	0	0	0	0	0	0
3056/	1	**	7	1	0	0	0	0	1	0	0	0	0	0	0	0	0	0
3952/	1	**	7	0	1	0	0	1	0	0	0	0	0	0	0	0	0	0

4512/	1	**	7	0	0	1	1	0	0	0	0	0	0	0	0	0	0	0
15624/	1	**	6	2	0	0	0	1	0	0	0	0	0	0	0	0	0	0
38640/	1	**	6	1	1	0	1	0	0	0	0	0	0	0	0	0	0	0
20720/	1	**	6	1	0	2	0	0	0	0	0	0	0	0	0	0	0	0
22456/	1	**	6	0	2	1	0	0	0	0	0	0	0	0	0	0	0	0
43904/	1	**	5	3	0	0	1	0	0	0	0	0	0	0	0	0	0	0
153888/	1	**	5	2	1	1	0	0	0	0	0	0	0	0	0	0	0	0
55888/	1	**	5	1	3	0	0	0	0	0	0	0	0	0	0	0	0	0
73220/	1	**	4	4	0	1	0	0	0	0	0	0	0	0	0	0	0	0
159880/	1	**	4	3	2	0	0	0	0	0	0	0	0	0	0	0	0	0
73248/	1	**	3	5	1	0	0	0	0	0	0	0	0	0	0	0	0	0
6000/	1	**	2	7	0	0	0	0	0	0	0	0	0	0	0	0	0	0
-510/	1	**	9	0	0	0	0	0	1	0	0	0	0	0	0	0	0	0
-6732/	1	**	8	1	0	0	0	1	0	0	0	0	0	0	0	0	0	0
-8370/	1	**	8	0	1	0	1	0	0	0	0	0	0	0	0	0	0	0
-4500/	1	**	8	0	0	2	0	0	0	0	0	0	0	0	0	0	0	0
-38016/	1	**	7	2	0	0	1	0	0	0	0	0	0	0	0	0	0	0
-89136/	1	**	7	1	1	1	0	0	0	0	0	0	0	0	0	0	0	0
-16200/	1	**	7	0	3	0	0	0	0	0	0	0	0	0	0	0	0	0
-118776/	1	**	6	3	0	1	0	0	0	0	0	0	0	0	0	0	0	0
-194796/	1	**	6	2	2	0	0	0	0	0	0	0	0	0	0	0	0	0
-223272/	1	**	5	4	1	0	0	0	0	0	0	0	0	0	0	0	0	0
-42714/	1	**	4	6	0	0	0	0	0	0	0	0	0	0	0	0	0	0
1002/	1	**	10	0	0	0	0	1	0	0	0	0	0	0	0	0	0	0
14220/	1	**	9	1	0	0	1	0	0	0	0	0	0	0	0	0	0	0
16740/	1	**	9	0	1	1	0	0	0	0	0	0	0	0	0	0	0	0
86040/	1	**	8	2	0	1	0	0	0	0	0	0	0	0	0	0	0	0
94230/	1	**	8	1	2	0	0	0	0	0	0	0	0	0	0	0	0	0
288240/	1	**	7	3	1	0	0	0	0	0	0	0	0	0	0	0	0	0
115920/	1	**	6	5	0	0	0	0	0	0	0	0	0	0	0	0	0	0
-1914/	1	**	11	0	0	0	1	0	0	0	0	0	0	0	0	0	0	0
-28446/	1	**	10	1	0	1	0	0	0	0	0	0	0	0	0	0	0	0
-15609/	1	**	10	0	2	0	0	0	0	0	0	0	0	0	0	0	0	0
-179190/	1	**	9	2	1	0	0	0	0	0	0	0	0	0	0	0	0	0
-154605/	1	**	8	4	0	0	0	0	0	0	0	0	0	0	0	0	0	0
3498/	1	**	12	0	0	1	0	0	0	0	0	0	0	0	0	0	0	0
53064/	1	**	11	1	1	0	0	0	0	0	0	0	0	0	0	0	0	0
112068/	1	**	10	3	0	0	0	0	0	0	0	0	0	0	0	0	0	0
-6006/	1	**	13	0	1	0	0	0	0	0	0	0	0	0	0	0	0	0
-45045/	1	**	12	2	0	0	0	0	0	0	0	0	0	0	0	0	0	0
9438/	1	**	14	1	0	0	0	0	0	0	0	0	0	0	0	0	0	0
-6435/	8	**	16	0	0	0	0	0	0	0	0	0	0	0	0	0	0	0

UNCLASSIFIED

P= 1

C 8 9 =

1/	1	**	0	0	0	0	0	0	0	0	0	0	0	0	0	0	0	0	1
-2/	1	**	1	0	0	0	0	0	0	0	0	0	0	0	0	0	0	1	0
-3/	1	**	0	1	0	0	0	0	0	0	0	0	0	0	0	0	1	0	0
-4/	1	**	0	0	1	0	0	0	0	0	0	0	0	0	0	1	0	0	0
-5/	1	**	0	0	0	1	0	0	0	0	0	0	0	0	1	0	0	0	0
-6/	1	**	0	0	0	0	1	0	0	0	0	0	0	1	0	0	0	0	0
-7/	1	**	0	0	0	0	0	1	0	0	0	0	1	0	0	0	0	0	0
-8/	1	**	0	0	0	0	0	0	1	0	0	1	0	0	0	0	0	0	0
-9/	1	**	0	0	0	0	0	0	0	1	1	0	0	0	0	0	0	0	0
4/	1	**	2	0	0	0	0	0	0	0	0	0	0	0	0	0	1	0	0
12/	1	**	1	1	0	0	0	0	0	0	0	0	0	0	0	1	0	0	0
16/	1	**	1	0	1	0	0	0	0	0	0	0	0	0	1	0	0	0	0
20/	1	**	1	0	0	1	0	0	0	0	0	0	0	1	0	0	0	0	0
24/	1	**	1	0	0	0	1	0	0	0	0	0	1	0	0	0	0	0	0
28/	1	**	1	0	0	0	0	1	0	0	0	1	0	0	0	0	0	0	0
32/	1	**	1	0	0	0	0	0	1	0	1	0	0	0	0	0	0	0	0
17/	1	**	1	0	0	0	0	0	0	2	0	0	0	0	0	0	0	0	0
9/	1	**	0	2	0	0	0	0	0	0	0	0	0	0	1	0	0	0	0
24/	1	**	0	1	1	0	0	0	0	0	0	0	0	1	0	0	0	0	0
30/	1	**	0	1	0	1	0	0	0	0	0	0	1	0	0	0	0	0	0
36/	1	**	0	1	0	0	1	0	0	0	0	1	0	0	0	0	0	0	0
42/	1	**	0	1	0	0	0	1	0	0	1	0	0	0	0	0	0	0	0
46/	1	**	0	1	0	0	0	0	1	1	0	0	0	0	0	0	0	0	0
16/	1	**	0	0	2	0	0	0	0	0	0	0	1	0	0	0	0	0	0
40/	1	**	0	0	1	1	0	0	0	0	0	1	0	0	0	0	0	0	0
48/	1	**	0	0	1	0	1	0	0	0	1	0	0	0	0	0	0	0	0
54/	1	**	0	0	1	0	0	1	0	1	0	0	0	0	0	0	0	0	0
28/	1	**	0	0	1	0	0	0	2	0	0	0	0	0	0	0	0	0	0
25/	1	**	0	0	0	2	0	0	0	0	1	0	0	0	0	0	0	0	0
58/	1	**	0	0	0	1	1	0	0	1	0	0	0	0	0	0	0	0	0
62/	1	**	0	0	0	1	0	1	1	0	0	0	0	0	0	0	0	0	0
32/	1	**	0	0	0	0	2	0	1	0	0	0	0	0	0	0	0	0	0
33/	1	**	0	0	0	0	1	2	0	0	0	0	0	0	0	0	0	0	0
-8/	1	**	3	0	0	0	0	0	0	0	0	0	0	0	0	1	0	0	0
-36/	1	**	2	1	0	0	0	0	0	0	0	0	0	0	1	0	0	0	0
-48/	1	**	2	0	1	0	0	0	0	0	0	0	0	1	0	0	0	0	0
-60/	1	**	2	0	0	1	0	0	0	0	0	0	1	0	0	0	0	0	0
-72/	1	**	2	0	0	0	1	0	0	0	0	1	0	0	0	0	0	0	0
-84/	1	**	2	0	0	0	0	1	0	0	1	0	0	0	0	0	0	0	0
-93/	1	**	2	0	0	0	0	0	1	1	0	0	0	0	0	0	0	0	0
-54/	1	**	1	2	0	0	0	0	0	0	0	0	0	1	0	0	0	0	0
-144/	1	**	1	1	1	0	0	0	0	0	0	0	1	0	0	0	0	0	0
-180/	1	**	1	1	0	1	0	0	0	0	0	1	0	0	0	0	0	0	0
-216/	1	**	1	1	0	0	1	0	0	0	1	0	0	0	0	0	0	0	0
-246/	1	**	1	1	0	0	0	1	0	1	0	0	0	0	0	0	0	0	0
-129/	1	**	1	1	0	0	0	0	2	0	0	0	0	0	0	0	0	0	0
-96/	1	**	1	0	2	0	0	0	0	0	0	1	0	0	0	0	0	0	0
-240/	1	**	1	0	1	1	0	0	0	0	1	0	0	0	0	0	0	0	0
-282/	1	**	1	0	1	0	1	0	0	1	0	0	0	0	0	0	0	0	0
-306/	1	**	1	0	1	0	0	1	1	0	0	0	0	0	0	0	0	0	0
-147/	1	**	1	0	0	2	0	0	0	1	0	0	0	0	0	0	0	0	0
-330/	1	**	1	0	0	1	1	0	1	0	0	0	0	0	0	0	0	0	0
-171/	1	**	1	0	0	1	0	2	0	0	0	0	0	0	0	0	0	0	0
-177/	1	**	1	0	0	0	2	1	0	0	0	0	0	0	0	0	0	0	0
-27/	1	**	0	3	0	0	0	0	0	0	0	0	1	0	0	0	0	0	0
-108/	1	**	0	2	1	0	0	0	0	0	0	1	0	0	0	0	0	0	0
-135/	1	**	0	2	0	1	0	0	0	0	1	0	0	0	0	0	0	0	0
-159/	1	**	0	2	0	0	1	0	0	1	0	0	0	0	0	0	0	0	0

-174/	1	**	0	2	0	0	0	1	1	0	0	0	0	0	0	0	0	0	0
-144/	1	**	0	1	2	0	0	0	0	0	1	0	0	0	0	0	0	0	0
-354/	1	**	0	1	1	1	0	0	0	1	0	0	0	0	0	0	0	0	0
-402/	1	**	0	1	1	0	1	0	1	0	0	0	0	0	0	0	0	0	0
-210/	1	**	0	1	1	0	0	2	0	0	0	0	0	0	0	0	0	0	0
-210/	1	**	0	1	0	2	0	0	1	0	0	0	0	0	0	0	0	0	0
-456/	1	**	0	1	0	1	1	1	0	0	0	0	0	0	0	0	0	0	0
-79/	1	**	0	1	0	0	3	0	0	0	0	0	0	0	0	0	0	0	0
-63/	1	**	0	0	3	0	0	0	0	1	0	0	0	0	0	0	0	0	0
-225/	1	**	0	0	2	1	0	0	1	0	0	0	0	0	0	0	0	0	0
-246/	1	**	0	0	2	0	1	1	0	0	0	0	0	0	0	0	0	0	0
-258/	1	**	0	0	1	2	0	1	0	0	0	0	0	0	0	0	0	0	0
-270/	1	**	0	0	1	1	2	0	0	0	0	0	0	0	0	0	0	0	0
-95/	1	**	0	0	0	3	1	0	0	0	0	0	0	0	0	0	0	0	0
16/	1	**	4	0	0	0	0	0	0	0	0	0	0	0	1	0	0	0	0
96/	1	**	3	1	0	0	0	0	0	0	0	0	0	1	0	0	0	0	0
128/	1	**	3	0	1	0	0	0	0	0	0	0	1	0	0	0	0	0	0
160/	1	**	3	0	0	1	0	0	0	0	0	1	0	0	0	0	0	0	0
192/	1	**	3	0	0	0	1	0	0	0	1	0	0	0	0	0	0	0	0
220/	1	**	3	0	0	0	0	1	0	1	0	0	0	0	0	0	0	0	0
116/	1	**	3	0	0	0	0	0	2	0	0	0	0	0	0	0	0	0	0
216/	1	**	2	2	0	0	0	0	0	0	0	0	1	0	0	0	0	0	0
576/	1	**	2	1	1	0	0	0	0	0	0	1	0	0	0	0	0	0	0
720/	1	**	2	1	0	1	0	0	0	0	1	0	0	0	0	0	0	0	0
852/	1	**	2	1	0	0	1	0	0	1	0	0	0	0	0	0	0	0	0
936/	1	**	2	1	0	0	0	1	1	0	0	0	0	0	0	0	0	0	0
384/	1	**	2	0	2	0	0	0	0	0	1	0	0	0	0	0	0	0	0
948/	1	**	2	0	1	1	0	0	0	1	0	0	0	0	0	0	0	0	0
1080/	1	**	2	0	1	0	1	0	1	0	0	0	0	0	0	0	0	0	0
564/	1	**	2	0	1	0	0	2	0	0	0	0	0	0	0	0	0	0	0
564/	1	**	2	0	0	2	0	0	1	0	0	0	0	0	0	0	0	0	0
1224/	1	**	2	0	0	1	1	1	0	0	0	0	0	0	0	0	0	0	0
212/	1	**	2	0	0	0	3	0	0	0	0	0	0	0	0	0	0	0	0
216/	1	**	1	3	0	0	0	0	0	0	0	1	0	0	0	0	0	0	0
864/	1	**	1	2	1	0	0	0	0	0	1	0	0	0	0	0	0	0	0
1068/	1	**	1	2	0	1	0	0	0	1	0	0	0	0	0	0	0	0	0
1224/	1	**	1	2	0	0	1	0	1	0	0	0	0	0	0	0	0	0	0
642/	1	**	1	2	0	0	0	2	0	0	0	0	0	0	0	0	0	0	0
1140/	1	**	1	1	2	0	0	0	0	1	0	0	0	0	0	0	0	0	0
2736/	1	**	1	1	1	1	0	0	1	0	0	0	0	0	0	0	0	0	0
3000/	1	**	1	1	1	0	1	1	0	0	0	0	0	0	0	0	0	0	0
1572/	1	**	1	1	0	2	0	1	0	0	0	0	0	0	0	0	0	0	0
1644/	1	**	1	1	0	1	2	0	0	0	0	0	0	0	0	0	0	0	0
488/	1	**	1	0	3	0	0	0	1	0	0	0	0	0	0	0	0	0	0
1692/	1	**	1	0	2	1	0	1	0	0	0	0	0	0	0	0	0	0	0
888/	1	**	1	0	2	0	2	0	0	0	0	0	0	0	0	0	0	0	0
1872/	1	**	1	0	1	2	1	0	0	0	0	0	0	0	0	0	0	0	0
165/	1	**	1	0	0	4	0	0	0	0	0	0	0	0	0	0	0	0	0
81/	1	**	0	4	0	0	0	0	0	0	1	0	0	0	0	0	0	0	0
428/	1	**	0	3	1	0	0	0	0	1	0	0	0	0	0	0	0	0	0
516/	1	**	0	3	0	1	0	0	1	0	0	0	0	0	0	0	0	0	0
568/	1	**	0	3	0	0	1	1	0	0	0	0	0	0	0	0	0	0	0
828/	1	**	0	2	2	0	0	0	1	0	0	0	0	0	0	0	0	0	0
1920/	1	**	0	2	1	1	0	1	0	0	0	0	0	0	0	0	0	0	0
1008/	1	**	0	2	1	0	2	0	0	0	0	0	0	0	0	0	0	0	0
1062/	1	**	0	2	0	2	1	0	0	0	0	0	0	0	0	0	0	0	0
688/	1	**	0	1	3	0	0	1	0	0	0	0	0	0	0	0	0	0	0
2292/	1	**	0	1	2	1	1	0	0	0	0	0	0	0	0	0	0	0	0
808/	1	**	0	1	1	3	0	0	0	0	0	0	0	0	0	0	0	0	0
206/	1	**	0	0	4	0	1	0	0	0	0	0	0	0	0	0	0	0	0
436/	1	**	0	0	3	2	0	0	0	0	0	0	0	0	0	0	0	0	0
-32/	1	**	5	0	0	0	0	0	0	0	0	0	0	1	0	0	0	0	0
-240/	1	**	4	1	0	0	0	0	0	0	0	0	1	0	0	0	0	0	0
-320/	1	**	4	0	1	0	0	0	0	0	0	1	0	0	0	0	0	0	0
-400/	1	**	4	0	0	1	0	0	0	0	1	0	0	0	0	0	0	0	0

UNCLASSIFIED

-475/	1	**	4	0	0	0	1	0	0	1	0	0	0	0	0	0	0	0	0
-525/	1	**	4	0	0	0	0	1	1	0	0	0	0	0	0	0	0	0	0
-720/	1	**	3	2	0	0	0	0	0	0	0	1	0	0	0	0	0	0	0
-1920/	1	**	3	1	1	0	0	0	0	0	1	0	0	0	0	0	0	0	0
-2380/	1	**	3	1	0	1	0	0	0	1	0	0	0	0	0	0	0	0	0
-2740/	1	**	3	1	0	0	1	0	1	0	0	0	0	0	0	0	0	0	0
-1440/	1	**	3	1	0	0	0	2	0	0	0	0	0	0	0	0	0	0	0
-1270/	1	**	3	0	2	0	0	0	0	1	0	0	0	0	0	0	0	0	0
-3060/	1	**	3	0	1	1	0	0	1	0	0	0	0	0	0	0	0	0	0
-3360/	1	**	3	0	1	0	1	1	0	0	0	0	0	0	0	0	0	0	0
-1760/	1	**	3	0	0	2	0	1	0	0	0	0	0	0	0	0	0	0	0
-1840/	1	**	3	0	0	1	2	0	0	0	0	0	0	0	0	0	0	0	0
-1080/	1	**	2	3	0	0	0	0	0	0	1	0	0	0	0	0	0	0	0
-4290/	1	**	2	2	1	0	0	0	0	1	0	0	0	0	0	0	0	0	0
-5190/	1	**	2	2	0	1	0	0	1	0	0	0	0	0	0	0	0	0	0
-5730/	1	**	2	2	0	0	1	1	0	0	0	0	0	0	0	0	0	0	0
-5550/	1	**	2	1	2	0	0	0	1	0	0	0	0	0	0	0	0	0	0
-12900/	1	**	2	1	1	1	0	1	0	0	0	0	0	0	0	0	0	0	0
-6780/	1	**	2	1	1	0	2	0	0	0	0	0	0	0	0	0	0	0	0
-7140/	1	**	2	1	0	2	1	0	0	0	0	0	0	0	0	0	0	0	0
-2310/	1	**	2	0	3	0	0	1	0	0	0	0	0	0	0	0	0	0	0
-7710/	1	**	2	0	2	1	1	0	0	0	0	0	0	0	0	0	0	0	0
-2720/	1	**	2	0	1	3	0	0	0	0	0	0	0	0	0	0	0	0	0
-805/	1	**	1	4	0	0	0	0	0	1	0	0	0	0	0	0	0	0	0
-4180/	1	**	1	3	1	0	0	0	1	0	0	0	0	0	0	0	0	0	0
-4880/	1	**	1	3	0	1	0	1	0	0	0	0	0	0	0	0	0	0	0
-2570/	1	**	1	3	0	0	2	0	0	0	0	0	0	0	0	0	0	0	0
-7860/	1	**	1	2	2	0	0	1	0	0	0	0	0	0	0	0	0	0	0
-17520/	1	**	1	2	1	1	1	0	0	0	0	0	0	0	0	0	0	0	0
-3090/	1	**	1	2	0	3	0	0	0	0	0	0	0	0	0	0	0	0	0
-6300/	1	**	1	1	3	0	1	0	0	0	0	0	0	0	0	0	0	0	0
-10020/	1	**	1	1	2	2	0	0	0	0	0	0	0	0	0	0	0	0	0
-1805/	1	**	1	0	4	1	0	0	0	0	0	0	0	0	0	0	0	0	0
-236/	1	**	0	5	0	0	0	0	1	0	0	0	0	0	0	0	0	0	0
-1485/	1	**	0	4	1	0	0	1	0	0	0	0	0	0	0	0	0	0	0
-1660/	1	**	0	4	0	1	1	0	0	0	0	0	0	0	0	0	0	0	0
-3580/	1	**	0	3	2	0	1	0	0	0	0	0	0	0	0	0	0	0	0
-3800/	1	**	0	3	1	2	0	0	0	0	0	0	0	0	0	0	0	0	0
-4110/	1	**	0	2	3	1	0	0	0	0	0	0	0	0	0	0	0	0	0
-445/	1	**	0	1	5	0	0	0	0	0	0	0	0	0	0	0	0	0	0
64/	1	**	6	0	0	0	0	0	0	0	0	0	1	0	0	0	0	0	0
576/	1	**	5	1	0	0	0	0	0	0	0	1	0	0	0	0	0	0	0
768/	1	**	5	0	1	0	0	0	0	0	1	0	0	0	0	0	0	0	0
954/	1	**	5	0	0	1	0	0	0	1	0	0	0	0	0	0	0	0	0
1104/	1	**	5	0	0	0	1	0	1	0	0	0	0	0	0	0	0	0	0
582/	1	**	5	0	0	0	0	2	0	0	0	0	0	0	0	0	0	0	0
2160/	1	**	4	2	0	0	0	0	0	0	1	0	0	0	0	0	0	0	0
5730/	1	**	4	1	1	0	0	0	0	1	0	0	0	0	0	0	0	0	0
6960/	1	**	4	1	0	1	0	0	1	0	0	0	0	0	0	0	0	0	0
7710/	1	**	4	1	0	0	1	1	0	0	0	0	0	0	0	0	0	0	0
3720/	1	**	4	0	2	0	0	0	1	0	0	0	0	0	0	0	0	0	0
8670/	1	**	4	0	1	1	0	1	0	0	0	0	0	0	0	0	0	0	0
4560/	1	**	4	0	1	0	2	0	0	0	0	0	0	0	0	0	0	0	0
4800/	1	**	4	0	0	2	1	0	0	0	0	0	0	0	0	0	0	0	0
4300/	1	**	3	3	0	0	0	0	0	1	0	0	0	0	0	0	0	0	0
16800/	1	**	3	2	1	0	0	0	1	0	0	0	0	0	0	0	0	0	0
19680/	1	**	3	2	0	1	0	1	0	0	0	0	0	0	0	0	0	0	0
10380/	1	**	3	2	0	0	2	0	0	0	0	0	0	0	0	0	0	0	0
21120/	1	**	3	1	2	0	0	1	0	0	0	0	0	0	0	0	0	0	0
47160/	1	**	3	1	1	1	1	0	0	0	0	0	0	0	0	0	0	0	0
8320/	1	**	3	1	0	3	0	0	0	0	0	0	0	0	0	0	0	0	0
8480/	1	**	3	0	3	0	1	0	0	0	0	0	0	0	0	0	0	0	0
13500/	1	**	3	0	2	2	0	0	0	0	0	0	0	0	0	0	0	0	0
4740/	1	**	2	4	0	0	0	0	1	0	0	0	0	0	0	0	0	0	0
23940/	1	**	2	3	1	0	0	1	0	0	0	0	0	0	0	0	0	0	0

26820/	1	**	2	3	0	1	1	0	0	0	0	0	0	0	0	0	0	0	0
43380/	1	**	2	2	2	0	1	0	0	0	0	0	0	0	0	0	0	0	0
46080/	1	**	2	2	1	2	0	0	0	0	0	0	0	0	0	0	0	0	0
33240/	1	**	2	1	3	1	0	0	0	0	0	0	0	0	0	0	0	0	0
1800/	1	**	2	0	5	0	0	0	0	0	0	0	0	0	0	0	0	0	0
2712/	1	**	1	5	0	0	0	1	0	0	0	0	0	0	0	0	0	0	0
16440/	1	**	1	4	1	0	1	0	0	0	0	0	0	0	0	0	0	0	0
8745/	1	**	1	4	0	2	0	0	0	0	0	0	0	0	0	0	0	0	0
37860/	1	**	1	3	2	1	0	0	0	0	0	0	0	0	0	0	0	0	0
10260/	1	**	1	2	4	0	0	0	0	0	0	0	0	0	0	0	0	0	0
623/	1	**	0	6	0	0	1	0	0	0	0	0	0	0	0	0	0	0	0
4314/	1	**	0	5	1	1	0	0	0	0	0	0	0	0	0	0	0	0	0
3900/	1	**	0	4	3	0	0	0	0	0	0	0	0	0	0	0	0	0	0
-128/	1	**	7	0	0	0	0	0	0	0	0	1	0	0	0	0	0	0	0
-1344/	1	**	6	1	0	0	0	0	0	0	1	0	0	0	0	0	0	0	0
-1785/	1	**	6	0	1	0	0	0	0	1	0	0	0	0	0	0	0	0	0
-2177/	1	**	6	0	0	1	0	0	1	0	0	0	0	0	0	0	0	0	0
-2422/	1	**	6	0	0	0	1	1	0	0	0	0	0	0	0	0	0	0	0
-6027/	1	**	5	2	0	0	0	0	0	1	0	0	0	0	0	0	0	0	0
-15750/	1	**	5	1	1	0	0	0	1	0	0	0	0	0	0	0	0	0	0
-18522/	1	**	5	1	0	1	0	1	0	0	0	0	0	0	0	0	0	0	0
-9786/	1	**	5	1	0	0	2	0	0	0	0	0	0	0	0	0	0	0	0
-9933/	1	**	5	0	2	0	0	1	0	0	0	0	0	0	0	0	0	0	0
-22218/	1	**	5	0	1	1	1	0	0	0	0	0	0	0	0	0	0	0	0
-3920/	1	**	5	0	0	3	0	0	0	0	0	0	0	0	0	0	0	0	0
-14805/	1	**	4	3	0	0	0	0	1	0	0	0	0	0	0	0	0	0	0
-56280/	1	**	4	2	1	0	0	1	0	0	0	0	0	0	0	0	0	0	0
-63210/	1	**	4	2	0	1	1	0	0	0	0	0	0	0	0	0	0	0	0
-68145/	1	**	4	1	2	0	1	0	0	0	0	0	0	0	0	0	0	0	0
-72450/	1	**	4	1	1	2	0	0	0	0	0	0	0	0	0	0	0	0	0
-26145/	1	**	4	0	3	1	0	0	0	0	0	0	0	0	0	0	0	0	0
-21245/	1	**	3	4	0	0	0	1	0	0	0	0	0	0	0	0	0	0	0
-103320/	1	**	3	3	1	0	1	0	0	0	0	0	0	0	0	0	0	0	0
-55020/	1	**	3	3	0	2	0	0	0	0	0	0	0	0	0	0	0	0	0
-178710/	1	**	3	2	2	1	0	0	0	0	0	0	0	0	0	0	0	0	0
-32305/	1	**	3	1	4	0	0	0	0	0	0	0	0	0	0	0	0	0	0
-17619/	1	**	2	5	0	0	1	0	0	0	0	0	0	0	0	0	0	0	0
-101850/	1	**	2	4	1	1	0	0	0	0	0	0	0	0	0	0	0	0	0
-73710/	1	**	2	3	3	0	0	0	0	0	0	0	0	0	0	0	0	0	0
-7742/	1	**	1	6	0	1	0	0	0	0	0	0	0	0	0	0	0	0	0
-25242/	1	**	1	5	2	0	0	0	0	0	0	0	0	0	0	0	0	0	0
-1373/	1	**	0	7	1	0	0	0	0	0	0	0	0	0	0	0	0	0	0
256/	1	**	8	0	0	0	0	0	0	0	1	0	0	0	0	0	0	0	0
3064/	1	**	7	1	0	0	0	0	0	1	0	0	0	0	0	0	0	0	0
4016/	1	**	7	0	1	0	0	0	1	0	0	0	0	0	0	0	0	0	0
4744/	1	**	7	0	0	1	0	1	0	0	0	0	0	0	0	0	0	0	0
2512/	1	**	7	0	0	0	2	0	0	0	0	0	0	0	0	0	0	0	0
15848/	1	**	6	2	0	0	0	0	1	0	0	0	0	0	0	0	0	0	0
40320/	1	**	6	1	1	0	0	1	0	0	0	0	0	0	0	0	0	0	0
45416/	1	**	6	1	0	1	1	0	0	0	0	0	0	0	0	0	0	0	0
24472/	1	**	6	0	2	0	1	0	0	0	0	0	0	0	0	0	0	0	0
26040/	1	**	6	0	1	2	0	0	0	0	0	0	0	0	0	0	0	0	0
45640/	1	**	5	3	0	0	0	1	0	0	0	0	0	0	0	0	0	0	0
166992/	1	**	5	2	1	0	1	0	0	0	0	0	0	0	0	0	0	0	0
89040/	1	**	5	2	0	2	0	0	0	0	0	0	0	0	0	0	0	0	0
192864/	1	**	5	1	2	1	0	0	0	0	0	0	0	0	0	0	0	0	0
17444/	1	**	5	0	4	0	0	0	0	0	0	0	0	0	0	0	0	0	0
79100/	1	**	4	4	0	0	1	0	0	0	0	0	0	0	0	0	0	0	0
366520/	1	**	4	3	1	1	0	0	0	0	0	0	0	0	0	0	0	0	0
199080/	1	**	4	2	3	0	0	0	0	0	0	0	0	0	0	0	0	0	0
83608/	1	**	3	5	0	1	0	0	0	0	0	0	0	0	0	0	0	0	0
227360/	1	**	3	4	2	0	0	0	0	0	0	0	0	0	0	0	0	0	0
51968/	1	**	2	6	1	0	0	0	0	0	0	0	0	0	0	0	0	0	0
2123/	1	**	1	8	0	0	0	0	0	0	0	0	0	0	0	0	0	0	0
-511/	1	**	9	0	0	0	0	0	0	1	0	0	0	0	0	0	0	0	0

UNCLASSIFIED

-6813/	1	**	8	1	0	0	0	0	1	0	0	0	0	0	0	0	0	0	0
-8703/	1	**	8	0	1	0	0	1	0	0	0	0	0	0	0	0	0	0	0
-9837/	1	**	8	0	0	1	1	0	0	0	0	0	0	0	0	0	0	0	0
-39384/	1	**	7	2	0	0	0	1	0	0	0	0	0	0	0	0	0	0	0
-96408/	1	**	7	1	1	0	1	0	0	0	0	0	0	0	0	0	0	0	0
-51480/	1	**	7	1	0	2	0	0	0	0	0	0	0	0	0	0	0	0	0
-58764/	1	**	7	0	2	1	0	0	0	0	0	0	0	0	0	0	0	0	0
-127848/	1	**	6	3	0	0	1	0	0	0	0	0	0	0	0	0	0	0	0
-445284/	1	**	6	2	1	1	0	0	0	0	0	0	0	0	0	0	0	0	0
-161364/	1	**	6	1	3	0	0	0	0	0	0	0	0	0	0	0	0	0	0
-254016/	1	**	5	4	0	1	0	0	0	0	0	0	0	0	0	0	0	0	0
-553140/	1	**	5	3	2	0	0	0	0	0	0	0	0	0	0	0	0	0	0
-316260/	1	**	4	5	1	0	0	0	0	0	0	0	0	0	0	0	0	0	0
-34476/	1	**	3	7	0	0	0	0	0	0	0	0	0	0	0	0	0	0	0
1012/	1	**	10	0	0	0	0	0	1	0	0	0	0	0	0	0	0	0	0
14680/	1	**	9	1	0	0	0	1	0	0	0	0	0	0	0	0	0	0	0
18040/	1	**	9	0	1	0	1	0	0	0	0	0	0	0	0	0	0	0	0
9650/	1	**	9	0	0	2	0	0	0	0	0	0	0	0	0	0	0	0	0
92250/	1	**	8	2	0	0	1	0	0	0	0	0	0	0	0	0	0	0	0
214740/	1	**	8	1	1	1	0	0	0	0	0	0	0	0	0	0	0	0	0
38940/	1	**	8	0	3	0	0	0	0	0	0	0	0	0	0	0	0	0	0
326760/	1	**	7	3	0	1	0	0	0	0	0	0	0	0	0	0	0	0	0
534240/	1	**	7	2	2	0	0	0	0	0	0	0	0	0	0	0	0	0	0
713160/	1	**	6	4	1	0	0	0	0	0	0	0	0	0	0	0	0	0	0
163380/	1	**	5	6	0	0	0	0	0	0	0	0	0	0	0	0	0	0	0
-1969/	1	**	11	0	0	0	0	1	0	0	0	0	0	0	0	0	0	0	0
-30371/	1	**	10	1	0	0	1	0	0	0	0	0	0	0	0	0	0	0	0
-35453/	1	**	10	0	1	1	0	0	0	0	0	0	0	0	0	0	0	0	0
-202345/	1	**	9	2	0	1	0	0	0	0	0	0	0	0	0	0	0	0	0
-220825/	1	**	9	1	2	0	0	0	0	0	0	0	0	0	0	0	0	0	0
-758505/	1	**	8	3	1	0	0	0	0	0	0	0	0	0	0	0	0	0	0
-347820/	1	**	7	5	0	0	0	0	0	0	0	0	0	0	0	0	0	0	0
3718/	1	**	12	0	0	0	1	0	0	0	0	0	0	0	0	0	0	0	0
59664/	1	**	11	1	0	1	0	0	0	0	0	0	0	0	0	0	0	0	0
32604/	1	**	11	0	2	0	0	0	0	0	0	0	0	0	0	0	0	0	0
410916/	1	**	10	2	1	0	0	0	0	0	0	0	0	0	0	0	0	0	0
392920/	1	**	9	4	0	0	0	0	0	0	0	0	0	0	0	0	0	0	0
-6721/	1	**	13	0	0	1	0	0	0	0	0	0	0	0	0	0	0	0	0
-109681/	1	**	12	1	1	0	0	0	0	0	0	0	0	0	0	0	0	0	0
-251966/	1	**	11	3	0	0	0	0	0	0	0	0	0	0	0	0	0	0	0
11440/	1	**	14	0	1	0	0	0	0	0	0	0	0	0	0	0	0	0	0
92092/	1	**	13	2	0	0	0	0	0	0	0	0	0	0	0	0	0	0	0
-17875/	1	**	15	1	0	0	0	0	0	0	0	0	0	0	0	0	0	0	0
1430/	1	**	17	0	0	0	0	0	0	0	0	0	0	0	0	0	0	0	0

P= 1

C 9 9 =

1/	1	**	0	0	0	0	0	0	0	0	0	0	0	0	0	0	0	0	0	1
-2/	1	**	1	0	0	0	0	0	0	0	0	0	0	0	0	0	0	0	1	0
-3/	1	**	0	1	0	0	0	0	0	0	0	0	0	0	0	0	0	1	0	0
-4/	1	**	0	0	1	0	0	0	0	0	0	0	0	0	0	0	1	0	0	0
-5/	1	**	0	0	0	1	0	0	0	0	0	0	0	0	0	1	0	0	0	0
-6/	1	**	0	0	0	0	1	0	0	0	0	0	0	0	1	0	0	0	0	0
-7/	1	**	0	0	0	0	0	1	0	0	0	0	0	1	0	0	0	0	0	0
-8/	1	**	0	0	0	0	0	0	1	0	0	0	1	0	0	0	0	0	0	0
-9/	1	**	0	0	0	0	0	0	0	1	0	1	0	0	0	0	0	0	0	0
-5/	1	**	0	0	0	0	0	0	0	0	2	0	0	0	0	0	0	0	0	0
4/	1	**	2	0	0	0	0	0	0	0	0	0	0	0	0	0	0	1	0	0
12/	1	**	1	1	0	0	0	0	0	0	0	0	0	0	0	0	1	0	0	0
16/	1	**	1	0	1	0	0	0	0	0	0	0	0	0	0	1	0	0	0	0
20/	1	**	1	0	0	1	0	0	0	0	0	0	0	0	1	0	0	0	0	0
24/	1	**	1	0	0	0	1	0	0	0	0	0	0	1	0	0	0	0	0	0
28/	1	**	1	0	0	0	0	1	0	0	0	0	1	0	0	0	0	0	0	0
32/	1	**	1	0	0	0	0	0	1	0	0	1	0	0	0	0	0	0	0	0
36/	1	**	1	0	0	0	0	0	0	1	1	0	0	0	0	0	0	0	0	0
9/	1	**	0	2	0	0	0	0	0	0	0	0	0	0	0	1	0	0	0	0
24/	1	**	0	1	1	0	0	0	0	0	0	0	0	0	1	0	0	0	0	0
30/	1	**	0	1	0	1	0	0	0	0	0	0	0	1	0	0	0	0	0	0
36/	1	**	0	1	0	0	1	0	0	0	0	0	1	0	0	0	0	0	0	0
42/	1	**	0	1	0	0	0	1	0	0	0	1	0	0	0	0	0	0	0	0
48/	1	**	0	1	0	0	0	0	1	0	1	0	0	0	0	0	0	0	0	0
25/	1	**	0	1	0	0	0	0	0	2	0	0	0	0	0	0	0	0	0	0
16/	1	**	0	0	2	0	0	0	0	0	0	0	0	1	0	0	0	0	0	0
40/	1	**	0	0	1	1	0	0	0	0	0	0	1	0	0	0	0	0	0	0
48/	1	**	0	0	1	0	1	0	0	0	0	1	0	0	0	0	0	0	0	0
56/	1	**	0	0	1	0	0	1	0	0	1	0	0	0	0	0	0	0	0	0
60/	1	**	0	0	1	0	0	0	1	1	0	0	0	0	0	0	0	0	0	0
25/	1	**	0	0	0	2	0	0	0	0	0	1	0	0	0	0	0	0	0	0
60/	1	**	0	0	0	1	1	0	0	0	1	0	0	0	0	0	0	0	0	0
66/	1	**	0	0	0	1	0	1	0	1	0	0	0	0	0	0	0	0	0	0
34/	1	**	0	0	0	1	0	0	2	0	0	0	0	0	0	0	0	0	0	0
34/	1	**	0	0	0	0	2	0	0	1	0	0	0	0	0	0	0	0	0	0
72/	1	**	0	0	0	0	1	1	1	0	0	0	0	0	0	0	0	0	0	0
37/	3	**	0	0	0	0	0	3	0	0	0	0	0	0	0	0	0	0	0	0
-8/	1	**	3	0	0	0	0	0	0	0	0	0	0	0	0	0	1	0	0	0
-36/	1	**	2	1	0	0	0	0	0	0	0	0	0	0	0	1	0	0	0	0
-48/	1	**	2	0	1	0	0	0	0	0	0	0	0	0	1	0	0	0	0	0
-60/	1	**	2	0	0	1	0	0	0	0	0	0	0	1	0	0	0	0	0	0
-72/	1	**	2	0	0	0	1	0	0	0	0	0	1	0	0	0	0	0	0	0
-84/	1	**	2	0	0	0	0	1	0	0	0	1	0	0	0	0	0	0	0	0
-96/	1	**	2	0	0	0	0	0	1	0	1	0	0	0	0	0	0	0	0	0
-51/	1	**	2	0	0	0	0	0	0	2	0	0	0	0	0	0	0	0	0	0
-54/	1	**	1	2	0	0	0	0	0	0	0	0	0	0	1	0	0	0	0	0
-144/	1	**	1	1	1	0	0	0	0	0	0	0	0	1	0	0	0	0	0	0
-180/	1	**	1	1	0	1	0	0	0	0	0	0	1	0	0	0	0	0	0	0
-216/	1	**	1	1	0	0	1	0	0	0	0	1	0	0	0	0	0	0	0	0
-252/	1	**	1	1	0	0	0	1	0	0	1	0	0	0	0	0	0	0	0	0
-276/	1	**	1	1	0	0	0	0	1	1	0	0	0	0	0	0	0	0	0	0
-96/	1	**	1	0	2	0	0	0	0	0	0	0	1	0	0	0	0	0	0	0
-240/	1	**	1	0	1	1	0	0	0	0	0	1	0	0	0	0	0	0	0	0
-288/	1	**	1	0	1	0	1	0	0	0	1	0	0	0	0	0	0	0	0	0
-324/	1	**	1	0	1	0	0	1	0	1	0	0	0	0	0	0	0	0	0	0
-168/	1	**	1	0	1	0	0	0	2	0	0	0	0	0	0	0	0	0	0	0
-150/	1	**	1	0	0	2	0	0	0	0	1	0	0	0	0	0	0	0	0	0
-348/	1	**	1	0	0	1	1	0	0	1	0	0	0	0	0	0	0	0	0	0
-372/	1	**	1	0	0	1	0	1	1	0	0	0	0	0	0	0	0	0	0	0

UNCLASSIFIED

-192/	1	**	1	0	0	0	2	0	1	0	0	0	0	0	0	0	0	0	0	0
-198/	1	**	1	0	0	0	1	2	0	0	0	0	0	0	0	0	0	0	0	0
-27/	1	**	0	3	0	0	0	0	0	0	0	0	0	1	0	0	0	0	0	0
-108/	1	**	0	2	1	0	0	0	0	0	0	0	1	0	0	0	0	0	0	0
-135/	1	**	0	2	0	1	0	0	0	0	0	1	0	0	0	0	0	0	0	0
-162/	1	**	0	2	0	0	1	0	0	0	1	0	0	0	0	0	0	0	0	0
-183/	1	**	0	2	0	0	0	1	0	1	0	0	0	0	0	0	0	0	0	0
-96/	1	**	0	2	0	0	0	0	2	0	0	0	0	0	0	0	0	0	0	0
-144/	1	**	0	1	2	0	0	0	0	0	0	1	0	0	0	0	0	0	0	0
-360/	1	**	0	1	1	1	0	0	0	0	1	0	0	0	0	0	0	0	0	0
-420/	1	**	0	1	1	0	1	0	0	1	0	0	0	0	0	0	0	0	0	0
-456/	1	**	0	1	1	0	0	1	1	0	0	0	0	0	0	0	0	0	0	0
-219/	1	**	0	1	0	2	0	0	0	1	0	0	0	0	0	0	0	0	0	0
-492/	1	**	0	1	0	1	1	0	1	0	0	0	0	0	0	0	0	0	0	0
-255/	1	**	0	1	0	1	0	2	0	0	0	0	0	0	0	0	0	0	0	0
-264/	1	**	0	1	0	0	2	1	0	0	0	0	0	0	0	0	0	0	0	0
-64/	1	**	0	0	3	0	0	0	0	0	1	0	0	0	0	0	0	0	0	0
-234/	1	**	0	0	2	1	0	0	0	1	0	0	0	0	0	0	0	0	0	0
-264/	1	**	0	0	2	0	1	0	1	0	0	0	0	0	0	0	0	0	0	0
-138/	1	**	0	0	2	0	0	2	0	0	0	0	0	0	0	0	0	0	0	0
-276/	1	**	0	0	1	2	0	0	1	0	0	0	0	0	0	0	0	0	0	0
-600/	1	**	0	0	1	1	1	1	0	0	0	0	0	0	0	0	0	0	0	0
-104/	1	**	0	0	1	0	3	0	0	0	0	0	0	0	0	0	0	0	0	0
-105/	1	**	0	0	0	3	0	1	0	0	0	0	0	0	0	0	0	0	0	0
-165/	1	**	0	0	0	2	2	0	0	0	0	0	0	0	0	0	0	0	0	0
16/	1	**	4	0	0	0	0	0	0	0	0	0	0	0	0	1	0	0	0	0
96/	1	**	3	1	0	0	0	0	0	0	0	0	0	0	1	0	0	0	0	0
128/	1	**	3	0	1	0	0	0	0	0	0	0	0	1	0	0	0	0	0	0
160/	1	**	3	0	0	1	0	0	0	0	0	0	1	0	0	0	0	0	0	0
192/	1	**	3	0	0	0	1	0	0	0	0	1	0	0	0	0	0	0	0	0
224/	1	**	3	0	0	0	0	1	0	0	1	0	0	0	0	0	0	0	0	0
248/	1	**	3	0	0	0	0	0	1	1	0	0	0	0	0	0	0	0	0	0
216/	1	**	2	2	0	0	0	0	0	0	0	0	0	1	0	0	0	0	0	0
576/	1	**	2	1	1	0	0	0	0	0	0	0	1	0	0	0	0	0	0	0
720/	1	**	2	1	0	1	0	0	0	0	0	1	0	0	0	0	0	0	0	0
864/	1	**	2	1	0	0	1	0	0	0	1	0	0	0	0	0	0	0	0	0
984/	1	**	2	1	0	0	0	1	0	1	0	0	0	0	0	0	0	0	0	0
516/	1	**	2	1	0	0	0	0	2	0	0	0	0	0	0	0	0	0	0	0
384/	1	**	2	0	2	0	0	0	0	0	0	1	0	0	0	0	0	0	0	0
960/	1	**	2	0	1	1	0	0	0	0	1	0	0	0	0	0	0	0	0	0
1128/	1	**	2	0	1	0	1	0	0	1	0	0	0	0	0	0	0	0	0	0
1224/	1	**	2	0	1	0	0	1	1	0	0	0	0	0	0	0	0	0	0	0
588/	1	**	2	0	0	2	0	0	0	1	0	0	0	0	0	0	0	0	0	0
1320/	1	**	2	0	0	1	1	0	1	0	0	0	0	0	0	0	0	0	0	0
684/	1	**	2	0	0	1	0	2	0	0	0	0	0	0	0	0	0	0	0	0
708/	1	**	2	0	0	0	2	1	0	0	0	0	0	0	0	0	0	0	0	0
216/	1	**	1	3	0	0	0	0	0	0	0	0	1	0	0	0	0	0	0	0
864/	1	**	1	2	1	0	0	0	0	0	0	1	0	0	0	0	0	0	0	0
1080/	1	**	1	2	0	1	0	0	0	0	1	0	0	0	0	0	0	0	0	0
1272/	1	**	1	2	0	0	1	0	0	1	0	0	0	0	0	0	0	0	0	0
1392/	1	**	1	2	0	0	0	1	1	0	0	0	0	0	0	0	0	0	0	0
1152/	1	**	1	1	2	0	0	0	0	0	1	0	0	0	0	0	0	0	0	0
2832/	1	**	1	1	1	1	0	0	0	1	0	0	0	0	0	0	0	0	0	0
3216/	1	**	1	1	1	0	1	0	1	0	0	0	0	0	0	0	0	0	0	0
1680/	1	**	1	1	1	0	0	2	0	0	0	0	0	0	0	0	0	0	0	0
1680/	1	**	1	1	0	2	0	0	1	0	0	0	0	0	0	0	0	0	0	0
3648/	1	**	1	1	0	1	1	1	0	0	0	0	0	0	0	0	0	0	0	0
632/	1	**	1	1	0	0	3	0	0	0	0	0	0	0	0	0	0	0	0	0
504/	1	**	1	0	3	0	0	0	0	1	0	0	0	0	0	0	0	0	0	0
1800/	1	**	1	0	2	1	0	0	1	0	0	0	0	0	0	0	0	0	0	0
1968/	1	**	1	0	2	0	1	1	0	0	0	0	0	0	0	0	0	0	0	0
2064/	1	**	1	0	1	2	0	1	0	0	0	0	0	0	0	0	0	0	0	0
2160/	1	**	1	0	1	1	2	0	0	0	0	0	0	0	0	0	0	0	0	0
760/	1	**	1	0	0	3	1	0	0	0	0	0	0	0	0	0	0	0	0	0
81/	1	**	0	4	0	0	0	0	0	0	0	1	0	0	0	0	0	0	0	0

432/	1	**	0	3	1	0	0	0	0	0	1	0	0	0	0	0	0	0	0	0
532/	1	**	0	3	0	1	0	0	0	1	0	0	0	0	0	0	0	0	0	0
608/	1	**	0	3	0	0	1	0	1	0	0	0	0	0	0	0	0	0	0	0
318/	1	**	0	3	0	0	0	2	0	0	0	0	0	0	0	0	0	0	0	0
852/	1	**	0	2	2	0	0	0	0	1	0	0	0	0	0	0	0	0	0	0
2040/	1	**	0	2	1	1	0	0	1	0	0	0	0	0	0	0	0	0	0	0
2232/	1	**	0	2	1	0	1	1	0	0	0	0	0	0	0	0	0	0	0	0
1170/	1	**	0	2	0	2	0	1	0	0	0	0	0	0	0	0	0	0	0	0
1224/	1	**	0	2	0	1	2	0	0	0	0	0	0	0	0	0	0	0	0	0
728/	1	**	0	1	3	0	0	0	1	0	0	0	0	0	0	0	0	0	0	0
2520/	1	**	0	1	2	1	0	1	0	0	0	0	0	0	0	0	0	0	0	0
1320/	1	**	0	1	2	0	2	0	0	0	0	0	0	0	0	0	0	0	0	0
2784/	1	**	0	1	1	2	1	0	0	0	0	0	0	0	0	0	0	0	0	0
245/	1	**	0	1	0	4	0	0	0	0	0	0	0	0	0	0	0	0	0	0
226/	1	**	0	0	4	0	0	1	0	0	0	0	0	0	0	0	0	0	0	0
1000/	1	**	0	0	3	1	1	0	0	0	0	0	0	0	0	0	0	0	0	0
528/	1	**	0	0	2	3	0	0	0	0	0	0	0	0	0	0	0	0	0	0
-32/	1	**	5	0	0	0	0	0	0	0	0	0	0	0	1	0	0	0	0	0
-240/	1	**	4	1	0	0	0	0	0	0	0	0	0	1	0	0	0	0	0	0
-320/	1	**	4	0	1	0	0	0	0	0	0	0	1	0	0	0	0	0	0	0
-400/	1	**	4	0	0	1	0	0	0	0	0	1	0	0	0	0	0	0	0	0
-480/	1	**	4	0	0	0	1	0	0	0	1	0	0	0	0	0	0	0	0	0
-550/	1	**	4	0	0	0	0	1	0	1	0	0	0	0	0	0	0	0	0	0
-290/	1	**	4	0	0	0	0	0	2	0	0	0	0	0	0	0	0	0	0	0
-720/	1	**	3	2	0	0	0	0	0	0	0	0	1	0	0	0	0	0	0	0
-1920/	1	**	3	1	1	0	0	0	0	0	0	1	0	0	0	0	0	0	0	0
-2400/	1	**	3	1	0	1	0	0	0	0	1	0	0	0	0	0	0	0	0	0
-2840/	1	**	3	1	0	0	1	0	0	1	0	0	0	0	0	0	0	0	0	0
-3120/	1	**	3	1	0	0	0	1	1	0	0	0	0	0	0	0	0	0	0	0
-1280/	1	**	3	0	2	0	0	0	0	0	1	0	0	0	0	0	0	0	0	0
-3160/	1	**	3	0	1	1	0	0	0	1	0	0	0	0	0	0	0	0	0	0
-3600/	1	**	3	0	1	0	1	0	1	0	0	0	0	0	0	0	0	0	0	0
-1880/	1	**	3	0	1	0	0	2	0	0	0	0	0	0	0	0	0	0	0	0
-1880/	1	**	3	0	0	2	0	0	1	0	0	0	0	0	0	0	0	0	0	0
-4080/	1	**	3	0	0	1	1	1	0	0	0	0	0	0	0	0	0	0	0	0
-2120/	3	**	3	0	0	0	3	0	0	0	0	0	0	0	0	0	0	0	0	0
-1080/	1	**	2	3	0	0	0	0	0	0	0	1	0	0	0	0	0	0	0	0
-4320/	1	**	2	2	1	0	0	0	0	0	1	0	0	0	0	0	0	0	0	0
-5340/	1	**	2	2	0	1	0	0	0	1	0	0	0	0	0	0	0	0	0	0
-6120/	1	**	2	2	0	0	1	0	1	0	0	0	0	0	0	0	0	0	0	0
-3210/	1	**	2	2	0	0	0	2	0	0	0	0	0	0	0	0	0	0	0	0
-5700/	1	**	2	1	2	0	0	0	0	1	0	0	0	0	0	0	0	0	0	0
-13680/	1	**	2	1	1	1	0	0	1	0	0	0	0	0	0	0	0	0	0	0
-15000/	1	**	2	1	1	0	1	1	0	0	0	0	0	0	0	0	0	0	0	0
-7860/	1	**	2	1	0	2	0	1	0	0	0	0	0	0	0	0	0	0	0	0
-8220/	1	**	2	1	0	1	2	0	0	0	0	0	0	0	0	0	0	0	0	0
-2440/	1	**	2	0	3	0	0	0	1	0	0	0	0	0	0	0	0	0	0	0
-8460/	1	**	2	0	2	1	0	1	0	0	0	0	0	0	0	0	0	0	0	0
-4440/	1	**	2	0	2	0	2	0	0	0	0	0	0	0	0	0	0	0	0	0
-9360/	1	**	2	0	1	2	1	0	0	0	0	0	0	0	0	0	0	0	0	0
-825/	1	**	2	0	0	4	0	0	0	0	0	0	0	0	0	0	0	0	0	0
-810/	1	**	1	4	0	0	0	0	0	0	1	0	0	0	0	0	0	0	0	0
-4280/	1	**	1	3	1	0	0	0	0	1	0	0	0	0	0	0	0	0	0	0
-5160/	1	**	1	3	0	1	0	0	1	0	0	0	0	0	0	0	0	0	0	0
-5680/	1	**	1	3	0	0	1	1	0	0	0	0	0	0	0	0	0	0	0	0
-8280/	1	**	1	2	2	0	0	0	1	0	0	0	0	0	0	0	0	0	0	0
-19200/	1	**	1	2	1	1	0	1	0	0	0	0	0	0	0	0	0	0	0	0
-10080/	1	**	1	2	1	0	2	0	0	0	0	0	0	0	0	0	0	0	0	0
-10620/	1	**	1	2	0	2	1	0	0	0	0	0	0	0	0	0	0	0	0	0
-6880/	1	**	1	1	3	0	0	1	0	0	0	0	0	0	0	0	0	0	0	0
-22920/	1	**	1	1	2	1	1	0	0	0	0	0	0	0	0	0	0	0	0	0
-8080/	1	**	1	1	1	3	0	0	0	0	0	0	0	0	0	0	0	0	0	0
-2060/	1	**	1	0	4	0	1	0	0	0	0	0	0	0	0	0	0	0	0	0
-4360/	1	**	1	0	3	2	0	0	0	0	0	0	0	0	0	0	0	0	0	0
-241/	1	**	0	5	0	0	0	0	0	1	0	0	0	0	0	0	0	0	0	0

UNCLASSIFIED

-1560/	1	**	0	4	1	0	0	0	1	0	0	0	0	0	0	0	0	0	0	0
-1815/	1	**	0	4	0	1	0	1	0	0	0	0	0	0	0	0	0	0	0	0
-955/	1	**	0	4	0	0	2	0	0	0	0	0	0	0	0	0	0	0	0	0
-3900/	1	**	0	3	2	0	0	1	0	0	0	0	0	0	0	0	0	0	0	0
-8680/	1	**	0	3	1	1	1	0	0	0	0	0	0	0	0	0	0	0	0	0
-1530/	1	**	0	3	0	3	0	0	0	0	0	0	0	0	0	0	0	0	0	0
-4680/	1	**	0	2	3	0	1	0	0	0	0	0	0	0	0	0	0	0	0	0
-7440/	1	**	0	2	2	2	0	0	0	0	0	0	0	0	0	0	0	0	0	0
-2680/	1	**	0	1	4	1	0	0	0	0	0	0	0	0	0	0	0	0	0	0
-290/	3	**	0	0	6	0	0	0	0	0	0	0	0	0	0	0	0	0	0	0
64/	1	**	6	0	0	0	0	0	0	0	0	0	0	1	0	0	0	0	0	0
576/	1	**	5	1	0	0	0	0	0	0	0	0	1	0	0	0	0	0	0	0
768/	1	**	5	0	1	0	0	0	0	0	0	1	0	0	0	0	0	0	0	0
960/	1	**	5	0	0	1	0	0	0	0	1	0	0	0	0	0	0	0	0	0
1140/	1	**	5	0	0	0	1	0	0	1	0	0	0	0	0	0	0	0	0	0
1260/	1	**	5	0	0	0	0	1	1	0	0	0	0	0	0	0	0	0	0	0
2160/	1	**	4	2	0	0	0	0	0	0	0	1	0	0	0	0	0	0	0	0
5760/	1	**	4	1	1	0	0	0	0	0	1	0	0	0	0	0	0	0	0	0
7140/	1	**	4	1	0	1	0	0	0	1	0	0	0	0	0	0	0	0	0	0
8220/	1	**	4	1	0	0	1	0	1	0	0	0	0	0	0	0	0	0	0	0
4320/	1	**	4	1	0	0	0	2	0	0	0	0	0	0	0	0	0	0	0	0
3810/	1	**	4	0	2	0	0	0	0	1	0	0	0	0	0	0	0	0	0	0
9180/	1	**	4	0	1	1	0	0	1	0	0	0	0	0	0	0	0	0	0	0
10080/	1	**	4	0	1	0	1	1	0	0	0	0	0	0	0	0	0	0	0	0
5280/	1	**	4	0	0	2	0	1	0	0	0	0	0	0	0	0	0	0	0	0
5520/	1	**	4	0	0	1	2	0	0	0	0	0	0	0	0	0	0	0	0	0
4320/	1	**	3	3	0	0	0	0	0	0	1	0	0	0	0	0	0	0	0	0
17160/	1	**	3	2	1	0	0	0	0	1	0	0	0	0	0	0	0	0	0	0
20760/	1	**	3	2	0	1	0	0	1	0	0	0	0	0	0	0	0	0	0	0
22920/	1	**	3	2	0	0	1	1	0	0	0	0	0	0	0	0	0	0	0	0
22200/	1	**	3	1	2	0	0	0	1	0	0	0	0	0	0	0	0	0	0	0
51600/	1	**	3	1	1	1	0	1	0	0	0	0	0	0	0	0	0	0	0	0
27120/	1	**	3	1	1	0	2	0	0	0	0	0	0	0	0	0	0	0	0	0
28560/	1	**	3	1	0	2	1	0	0	0	0	0	0	0	0	0	0	0	0	0
9240/	1	**	3	0	3	0	0	1	0	0	0	0	0	0	0	0	0	0	0	0
30840/	1	**	3	0	2	1	1	0	0	0	0	0	0	0	0	0	0	0	0	0
10880/	1	**	3	0	1	3	0	0	0	0	0	0	0	0	0	0	0	0	0	0
4830/	1	**	2	4	0	0	0	0	0	1	0	0	0	0	0	0	0	0	0	0
25080/	1	**	2	3	1	0	0	0	1	0	0	0	0	0	0	0	0	0	0	0
29280/	1	**	2	3	0	1	0	1	0	0	0	0	0	0	0	0	0	0	0	0
15420/	1	**	2	3	0	0	2	0	0	0	0	0	0	0	0	0	0	0	0	0
47160/	1	**	2	2	2	0	0	1	0	0	0	0	0	0	0	0	0	0	0	0
105120/	1	**	2	2	1	1	1	0	0	0	0	0	0	0	0	0	0	0	0	0
18540/	1	**	2	2	0	3	0	0	0	0	0	0	0	0	0	0	0	0	0	0
37800/	1	**	2	1	3	0	1	0	0	0	0	0	0	0	0	0	0	0	0	0
60120/	1	**	2	1	2	2	0	0	0	0	0	0	0	0	0	0	0	0	0	0
10830/	1	**	2	0	4	1	0	0	0	0	0	0	0	0	0	0	0	0	0	0
2832/	1	**	1	5	0	0	0	0	1	0	0	0	0	0	0	0	0	0	0	0
17820/	1	**	1	4	1	0	0	1	0	0	0	0	0	0	0	0	0	0	0	0
19920/	1	**	1	4	0	1	1	0	0	0	0	0	0	0	0	0	0	0	0	0
42960/	1	**	1	3	2	0	1	0	0	0	0	0	0	0	0	0	0	0	0	0
45600/	1	**	1	3	1	2	0	0	0	0	0	0	0	0	0	0	0	0	0	0
49320/	1	**	1	2	3	1	0	0	0	0	0	0	0	0	0	0	0	0	0	0
5340/	1	**	1	1	5	0	0	0	0	0	0	0	0	0	0	0	0	0	0	0
673/	1	**	0	6	0	0	0	1	0	0	0	0	0	0	0	0	0	0	0	0
4884/	1	**	0	5	1	0	1	0	0	0	0	0	0	0	0	0	0	0	0	0
2595/	1	**	0	5	0	2	0	0	0	0	0	0	0	0	0	0	0	0	0	0
14040/	1	**	0	4	2	1	0	0	0	0	0	0	0	0	0	0	0	0	0	0
5070/	1	**	0	3	4	0	0	0	0	0	0	0	0	0	0	0	0	0	0	0
-128/	1	**	7	0	0	0	0	0	0	0	0	0	1	0	0	0	0	0	0	0
-1344/	1	**	6	1	0	0	0	0	0	0	0	1	0	0	0	0	0	0	0	0
-1792/	1	**	6	0	1	0	0	0	0	0	1	0	0	0	0	0	0	0	0	0
-2226/	1	**	6	0	0	1	0	0	0	1	0	0	0	0	0	0	0	0	0	0
-2576/	1	**	6	0	0	0	1	0	1	0	0	0	0	0	0	0	0	0	0	0
-1358/	1	**	6	0	0	0	0	2	0	0	0	0	0	0	0	0	0	0	0	0

-6048/	1	**	5	2	0	0	0	0	0	0	1	0	0	0	0	0	0	0	0	0
-16044/	1	**	5	1	1	0	0	0	0	1	0	0	0	0	0	0	0	0	0	0
-19488/	1	**	5	1	0	1	0	0	1	0	0	0	0	0	0	0	0	0	0	0
-21588/	1	**	5	1	0	0	1	1	0	0	0	0	0	0	0	0	0	0	0	0
-10416/	1	**	5	0	2	0	0	0	1	0	0	0	0	0	0	0	0	0	0	0
-24276/	1	**	5	0	1	1	0	1	0	0	0	0	0	0	0	0	0	0	0	0
-12768/	1	**	5	0	1	0	2	0	0	0	0	0	0	0	0	0	0	0	0	0
-13440/	1	**	5	0	0	2	1	0	0	0	0	0	0	0	0	0	0	0	0	0
-15050/	1	**	4	3	0	0	0	0	0	1	0	0	0	0	0	0	0	0	0	0
-58800/	1	**	4	2	1	0	0	0	1	0	0	0	0	0	0	0	0	0	0	0
-68880/	1	**	4	2	0	1	0	1	0	0	0	0	0	0	0	0	0	0	0	0
-36330/	1	**	4	2	0	0	2	0	0	0	0	0	0	0	0	0	0	0	0	0
-73920/	1	**	4	1	2	0	0	1	0	0	0	0	0	0	0	0	0	0	0	0
-165060/	1	**	4	1	1	1	1	0	0	0	0	0	0	0	0	0	0	0	0	0
-29120/	1	**	4	1	0	3	0	0	0	0	0	0	0	0	0	0	0	0	0	0
-29680/	1	**	4	0	3	0	1	0	0	0	0	0	0	0	0	0	0	0	0	0
-47250/	1	**	4	0	2	2	0	0	0	0	0	0	0	0	0	0	0	0	0	0
-22120/	1	**	3	4	0	0	0	0	1	0	0	0	0	0	0	0	0	0	0	0
-111720/	1	**	3	3	1	0	0	1	0	0	0	0	0	0	0	0	0	0	0	0
-125160/	1	**	3	3	0	1	1	0	0	0	0	0	0	0	0	0	0	0	0	0
-202440/	1	**	3	2	2	0	1	0	0	0	0	0	0	0	0	0	0	0	0	0
-215040/	1	**	3	2	1	2	0	0	0	0	0	0	0	0	0	0	0	0	0	0
-155120/	1	**	3	1	3	1	0	0	0	0	0	0	0	0	0	0	0	0	0	0
-8400/	1	**	3	0	5	0	0	0	0	0	0	0	0	0	0	0	0	0	0	0
-18984/	1	**	2	5	0	0	0	1	0	0	0	0	0	0	0	0	0	0	0	0
-115080/	1	**	2	4	1	0	1	0	0	0	0	0	0	0	0	0	0	0	0	0
-61215/	1	**	2	4	0	2	0	0	0	0	0	0	0	0	0	0	0	0	0	0
-265020/	1	**	2	3	2	1	0	0	0	0	0	0	0	0	0	0	0	0	0	0
-71820/	1	**	2	2	4	0	0	0	0	0	0	0	0	0	0	0	0	0	0	0
-8722/	1	**	1	6	0	0	1	0	0	0	0	0	0	0	0	0	0	0	0	0
-60396/	1	**	1	5	1	1	0	0	0	0	0	0	0	0	0	0	0	0	0	0
-54600/	1	**	1	4	3	0	0	0	0	0	0	0	0	0	0	0	0	0	0	0
-1639/	1	**	0	7	0	1	0	0	0	0	0	0	0	0	0	0	0	0	0	0
-6230/	1	**	0	6	2	0	0	0	0	0	0	0	0	0	0	0	0	0	0	0
256/	1	**	8	0	0	0	0	0	0	0	0	1	0	0	0	0	0	0	0	0
3072/	1	**	7	1	0	0	0	0	0	0	1	0	0	0	0	0	0	0	0	0
4080/	1	**	7	0	1	0	0	0	0	1	0	0	0	0	0	0	0	0	0	0
4976/	1	**	7	0	0	1	0	0	1	0	0	0	0	0	0	0	0	0	0	0
5536/	1	**	7	0	0	0	1	1	0	0	0	0	0	0	0	0	0	0	0	0
16072/	1	**	6	2	0	0	0	0	0	1	0	0	0	0	0	0	0	0	0	0
42000/	1	**	6	1	1	0	0	0	1	0	0	0	0	0	0	0	0	0	0	0
49392/	1	**	6	1	0	1	0	1	0	0	0	0	0	0	0	0	0	0	0	0
26096/	1	**	6	1	0	0	2	0	0	0	0	0	0	0	0	0	0	0	0	0
26488/	1	**	6	0	2	0	0	1	0	0	0	0	0	0	0	0	0	0	0	0
59248/	1	**	6	0	1	1	1	0	0	0	0	0	0	0	0	0	0	0	0	0
31360/	3	**	6	0	0	3	0	0	0	0	0	0	0	0	0	0	0	0	0	0
47376/	1	**	5	3	0	0	0	0	1	0	0	0	0	0	0	0	0	0	0	0
180096/	1	**	5	2	1	0	0	1	0	0	0	0	0	0	0	0	0	0	0	0
202272/	1	**	5	2	0	1	1	0	0	0	0	0	0	0	0	0	0	0	0	0
218064/	1	**	5	1	2	0	1	0	0	0	0	0	0	0	0	0	0	0	0	0
231840/	1	**	5	1	1	2	0	0	0	0	0	0	0	0	0	0	0	0	0	0
83664/	1	**	5	0	3	1	0	0	0	0	0	0	0	0	0	0	0	0	0	0
84980/	1	**	4	4	0	0	0	1	0	0	0	0	0	0	0	0	0	0	0	0
413280/	1	**	4	3	1	0	1	0	0	0	0	0	0	0	0	0	0	0	0	0
220080/	1	**	4	3	0	2	0	0	0	0	0	0	0	0	0	0	0	0	0	0
714840/	1	**	4	2	2	1	0	0	0	0	0	0	0	0	0	0	0	0	0	0
129220/	1	**	4	1	4	0	0	0	0	0	0	0	0	0	0	0	0	0	0	0
93968/	1	**	3	5	0	0	1	0	0	0	0	0	0	0	0	0	0	0	0	0
543200/	1	**	3	4	1	1	0	0	0	0	0	0	0	0	0	0	0	0	0	0
393120/	1	**	3	3	3	0	0	0	0	0	0	0	0	0	0	0	0	0	0	0
61936/	1	**	2	6	0	1	0	0	0	0	0	0	0	0	0	0	0	0	0	0
201936/	1	**	2	5	2	0	0	0	0	0	0	0	0	0	0	0	0	0	0	0
21968/	1	**	1	7	1	0	0	0	0	0	0	0	0	0	0	0	0	0	0	0
3139/	9	**	0	9	0	0	0	0	0	0	0	0	0	0	0	0	0	0	0	0
-512/	1	**	9	0	0	0	0	0	0	0	1	0	0	0	0	0	0	0	0	0

UNCLASSIFIED

-6894/	1	**	8	1	0	0	0	0	0	1	0	0	0	0	0	0	0	0	0	0
-9036/	1	**	8	0	1	0	0	0	1	0	0	0	0	0	0	0	0	0	0	0
-10674/	1	**	8	0	0	1	0	1	0	0	0	0	0	0	0	0	0	0	0	0
-5652/	1	**	8	0	0	0	2	0	0	0	0	0	0	0	0	0	0	0	0	0
-40752/	1	**	7	2	0	0	0	0	1	0	0	0	0	0	0	0	0	0	0	0
-103680/	1	**	7	1	1	0	0	1	0	0	0	0	0	0	0	0	0	0	0	0
-116784/	1	**	7	1	0	1	1	0	0	0	0	0	0	0	0	0	0	0	0	0
-62928/	1	**	7	0	2	0	1	0	0	0	0	0	0	0	0	0	0	0	0	0
-66960/	1	**	7	0	1	2	0	0	0	0	0	0	0	0	0	0	0	0	0	0
-136920/	1	**	6	3	0	0	0	1	0	0	0	0	0	0	0	0	0	0	0	0
-500976/	1	**	6	2	1	0	1	0	0	0	0	0	0	0	0	0	0	0	0	0
-267120/	1	**	6	2	0	2	0	0	0	0	0	0	0	0	0	0	0	0	0	0
-578592/	1	**	6	1	2	1	0	0	0	0	0	0	0	0	0	0	0	0	0	0
-52332/	1	**	6	0	4	0	0	0	0	0	0	0	0	0	0	0	0	0	0	0
-284760/	1	**	5	4	0	0	1	0	0	0	0	0	0	0	0	0	0	0	0	0
-1319472/	1	**	5	3	1	1	0	0	0	0	0	0	0	0	0	0	0	0	0	0
-716688/	1	**	5	2	3	0	0	0	0	0	0	0	0	0	0	0	0	0	0	0
-376236/	1	**	4	5	0	1	0	0	0	0	0	0	0	0	0	0	0	0	0	0
-1023120/	1	**	4	4	2	0	0	0	0	0	0	0	0	0	0	0	0	0	0	0
-311808/	1	**	3	6	1	0	0	0	0	0	0	0	0	0	0	0	0	0	0	0
-19107/	1	**	2	8	0	0	0	0	0	0	0	0	0	0	0	0	0	0	0	0
1022/	1	**	10	0	0	0	0	0	0	1	0	0	0	0	0	0	0	0	0	0
15140/	1	**	9	1	0	0	0	0	1	0	0	0	0	0	0	0	0	0	0	0
19340/	1	**	9	0	1	0	0	1	0	0	0	0	0	0	0	0	0	0	0	0
21860/	1	**	9	0	0	1	1	0	0	0	0	0	0	0	0	0	0	0	0	0
98460/	1	**	8	2	0	0	0	1	0	0	0	0	0	0	0	0	0	0	0	0
241020/	1	**	8	1	1	0	1	0	0	0	0	0	0	0	0	0	0	0	0	0
128700/	1	**	8	1	0	2	0	0	0	0	0	0	0	0	0	0	0	0	0	0
139410/	1	**	8	0	2	1	0	0	0	0	0	0	0	0	0	0	0	0	0	0
365280/	1	**	7	3	0	0	1	0	0	0	0	0	0	0	0	0	0	0	0	0
1272240/	1	**	7	2	1	1	0	0	0	0	0	0	0	0	0	0	0	0	0	0
461040/	1	**	7	1	3	0	0	0	0	0	0	0	0	0	0	0	0	0	0	0
846720/	1	**	6	4	0	1	0	0	0	0	0	0	0	0	0	0	0	0	0	0
1843800/	1	**	6	3	2	0	0	0	0	0	0	0	0	0	0	0	0	0	0	0
1265040/	1	**	5	5	1	0	0	0	0	0	0	0	0	0	0	0	0	0	0	0
172380/	1	**	4	7	0	0	0	0	0	0	0	0	0	0	0	0	0	0	0	0
-2024/	1	**	11	0	0	0	0	0	1	0	0	0	0	0	0	0	0	0	0	0
-32296/	1	**	10	1	0	0	0	1	0	0	0	0	0	0	0	0	0	0	0	0
-39688/	1	**	10	0	1	0	1	0	0	0	0	0	0	0	0	0	0	0	0	0
-21230/	1	**	10	0	0	2	0	0	0	0	0	0	0	0	0	0	0	0	0	0
-225500/	1	**	9	2	0	0	1	0	0	0	0	0	0	0	0	0	0	0	0	0
-524920/	1	**	9	1	1	1	0	0	0	0	0	0	0	0	0	0	0	0	0	0
-285560/	3	**	9	0	3	0	0	0	0	0	0	0	0	0	0	0	0	0	0	0
-898590/	1	**	8	3	0	1	0	0	0	0	0	0	0	0	0	0	0	0	0	0
-1469160/	1	**	8	2	2	0	0	0	0	0	0	0	0	0	0	0	0	0	0	0
-2241360/	1	**	7	4	1	0	0	0	0	0	0	0	0	0	0	0	0	0	0	0
-599060/	1	**	6	6	0	0	0	0	0	0	0	0	0	0	0	0	0	0	0	0
3938/	1	**	12	0	0	0	0	1	0	0	0	0	0	0	0	0	0	0	0	0
66264/	1	**	11	1	0	0	1	0	0	0	0	0	0	0	0	0	0	0	0	0
77352/	1	**	11	0	1	1	0	0	0	0	0	0	0	0	0	0	0	0	0	0
485628/	1	**	10	2	0	1	0	0	0	0	0	0	0	0	0	0	0	0	0	0
529980/	1	**	10	1	2	0	0	0	0	0	0	0	0	0	0	0	0	0	0	0
2022680/	1	**	9	3	1	0	0	0	0	0	0	0	0	0	0	0	0	0	0	0
1043460/	1	**	8	5	0	0	0	0	0	0	0	0	0	0	0	0	0	0	0	0
-7436/	1	**	13	0	0	0	1	0	0	0	0	0	0	0	0	0	0	0	0	0
-129272/	1	**	12	1	0	1	0	0	0	0	0	0	0	0	0	0	0	0	0	0
-70642/	1	**	12	0	2	0	0	0	0	0	0	0	0	0	0	0	0	0	0	0
-971256/	1	**	11	2	1	0	0	0	0	0	0	0	0	0	0	0	0	0	0	0
-1021592/	1	**	10	4	0	0	0	0	0	0	0	0	0	0	0	0	0	0	0	0
13442/	1	**	14	0	0	1	0	0	0	0	0	0	0	0	0	0	0	0	0	0
236236/	1	**	13	1	1	0	0	0	0	0	0	0	0	0	0	0	0	0	0	0
1763762/	3	**	12	3	0	0	0	0	0	0	0	0	0	0	0	0	0	0	0	0
-22880/	1	**	15	0	1	0	0	0	0	0	0	0	0	0	0	0	0	0	0	0
-197340/	1	**	14	2	0	0	0	0	0	0	0	0	0	0	0	0	0	0	0	0
35750/	1	**	16	1	0	0	0	0	0	0	0	0	0	0	0	0	0	0	0	0
-24310/	9	**	18	0	0	0	0	0	0	0	0	0	0	0	0	0	0	0	0	0

Appendix C

TABLE OF $C_{nm}^{(2)}$, $1 \leq n \leq m \leq 16$

```
P= 2

C 1 1 =

          1/              2  **  1
```

```
P= 2

C 1 3 =

          1/              2  **  0  1
         -3/              8  **  2  0
```

```
P= 2

C 1 5 =

          1/              2  **  0  0  1
         -3/              4  **  1  1  0
          5/             16  **  3  0  0
```

UNCLASSIFIED

P= 2

C 1 7 =

1/	2	**	0	0	0	1
-3/	4	**	1	0	1	0
-3/	8	**	0	2	0	0
15/	16	**	2	1	0	0
-35/	128	**	4	0	0	0

P= 2

C 1 9 =

1/	2	**	0	0	0	0	1
-3/	4	**	1	0	0	1	0
-3/	4	**	0	1	1	0	0
15/	16	**	2	0	1	0	0
15/	16	**	1	2	0	0	0
-35/	32	**	3	1	0	0	0
63/	256	**	5	0	0	0	0

P= 2

C 111 =

1/	2	**	0	0	0	0	0	1
-3/	4	**	1	0	0	0	1	0
-3/	4	**	0	1	0	1	0	0
-3/	8	**	0	0	2	0	0	0
15/	16	**	2	0	0	1	0	0
15/	8	**	1	1	1	0	0	0
5/	16	**	0	3	0	0	0	0
-35/	32	**	3	0	1	0	0	0
-105/	64	**	2	2	0	0	0	0
315/	256	**	4	1	0	0	0	0
-231/	1024	**	6	0	0	0	0	0

P= 2

C 113 =

1/	2	**	0	0	0	0	0	0	1
-3/	4	**	1	0	0	0	0	1	0
-3/	4	**	0	1	0	0	1	0	0
-3/	4	**	0	0	1	1	0	0	0
15/	16	**	2	0	0	0	1	0	0
15/	8	**	1	1	0	1	0	0	0
15/	16	**	1	0	2	0	0	0	0
15/	16	**	0	2	1	0	0	0	0
-35/	32	**	3	0	0	1	0	0	0
-105/	32	**	2	1	1	0	0	0	0
-35/	32	**	1	3	0	0	0	0	0
315/	256	**	4	0	1	0	0	0	0
315/	128	**	3	2	0	0	0	0	0
-693/	512	**	5	1	0	0	0	0	0
429/	2048	**	7	0	0	0	0	0	0

P= 2

C 115 =

1/	2	**	0	0	0	0	0	0	0	1
-3/	4	**	1	0	0	0	0	0	1	0
-3/	4	**	0	1	0	0	0	1	0	0
-3/	4	**	0	0	1	0	1	0	0	0
-3/	8	**	0	0	0	2	0	0	0	0
15/	16	**	2	0	0	0	0	1	0	0
15/	8	**	1	1	0	0	1	0	0	0
15/	8	**	1	0	1	1	0	0	0	0
15/	16	**	0	2	0	1	0	0	0	0
15/	16	**	0	1	2	0	0	0	0	0
-35/	32	**	3	0	0	0	1	0	0	0
-105/	32	**	2	1	0	1	0	0	0	0
-105/	64	**	2	0	2	0	0	0	0	0
-105/	32	**	1	2	1	0	0	0	0	0
-35/	128	**	0	4	0	0	0	0	0	0
315/	256	**	4	0	0	1	0	0	0	0
315/	64	**	3	1	1	0	0	0	0	0
315/	128	**	2	3	0	0	0	0	0	0
-693/	512	**	5	0	1	0	0	0	0	0
-3465/	1024	**	4	2	0	0	0	0	0	0
3003/	2048	**	6	1	0	0	0	0	0	0
-6435/	32768	**	8	0	0	0	0	0	0	0

UNCLASSIFIED

P= 2

C 2 2 =

```
 1/          2  **  0  1
-1/          2  **  2  0
```

P= 2

C 2 4 =

```
 1/          2  **  0  0  1
-1/          1  **  1  1  0
 1/          2  **  3  0  0
```

P= 2

C 2 6 =

```
 1/          2  **  0  0  0  1
-1/          1  **  1  0  1  0
-1/          2  **  0  2  0  0
 3/          2  **  2  1  0  0
-1/          2  **  4  0  0  0
```

P= 2

C 2 8 =

1/	2	**	0	0	0	0	1
-1/	1	**	1	0	0	1	0
-1/	1	**	0	1	1	0	0
3/	2	**	2	0	1	0	0
3/	2	**	1	2	0	0	0
-2/	1	**	3	1	0	0	0
1/	2	**	5	0	0	0	0

P= 2

C 210 =

1/	2	**	0	0	0	0	0	1
-1/	1	**	1	0	0	0	1	0
-1/	1	**	0	1	0	1	0	0
-1/	2	**	0	0	2	0	0	0
3/	2	**	2	0	0	1	0	0
3/	1	**	1	1	1	0	0	0
1/	2	**	0	3	0	0	0	0
-2/	1	**	3	0	1	0	0	0
-3/	1	**	2	2	0	0	0	0
5/	2	**	4	1	0	0	0	0
-1/	2	**	6	0	0	0	0	0

P= 2

C 212 =

1/	2	**	0	0	0	0	0	0	1
-1/	1	**	1	0	0	0	0	1	0
-1/	1	**	0	1	0	0	1	0	0
-1/	1	**	0	0	1	1	0	0	0
3/	2	**	2	0	0	0	1	0	0
3/	1	**	1	1	0	1	0	0	0
3/	2	**	1	0	2	0	0	0	0
3/	2	**	0	2	1	0	0	0	0
-2/	1	**	3	0	0	1	0	0	0
-6/	1	**	2	1	1	0	0	0	0
-2/	1	**	1	3	0	0	0	0	0
5/	2	**	4	0	1	0	0	0	0
5/	1	**	3	2	0	0	0	0	0
-3/	1	**	5	1	0	0	0	0	0
1/	2	**	7	0	0	0	0	0	0

UNCLASSIFIED

P= 2

C 214 =

1/	2	**	0	0	0	0	0	0	0	1
-1/	1	**	1	0	0	0	0	0	1	0
-1/	1	**	0	1	0	0	0	1	0	0
-1/	1	**	0	0	1	0	1	0	0	0
-1/	2	**	0	0	0	2	0	0	0	0
3/	2	**	2	0	0	0	0	1	0	0
3/	1	**	1	1	0	0	1	0	0	0
3/	1	**	1	0	1	1	0	0	0	0
3/	2	**	0	2	0	1	0	0	0	0
3/	2	**	0	1	2	0	0	0	0	0
-2/	1	**	3	0	0	0	1	0	0	0
-6/	1	**	2	1	0	1	0	0	0	0
-3/	1	**	2	0	2	0	0	0	0	0
-6/	1	**	1	2	1	0	0	0	0	0
-1/	2	**	0	4	0	0	0	0	0	0
5/	2	**	4	0	0	1	0	0	0	0
10/	1	**	3	1	1	0	0	0	0	0
5/	1	**	2	3	0	0	0	0	0	0
-3/	1	**	5	0	1	0	0	0	0	0
-15/	2	**	4	2	0	0	0	0	0	0
7/	2	**	6	1	0	0	0	0	0	0
-1/	2	**	8	0	0	0	0	0	0	0

P= 2

C 216 =

1/	2	**	0	0	0	0	0	0	0	0	1
-1/	1	**	1	0	0	0	0	0	0	1	0
-1/	1	**	0	1	0	0	0	0	1	0	0
-1/	1	**	0	0	1	0	0	1	0	0	0
-1/	1	**	0	0	0	1	1	0	0	0	0
3/	2	**	2	0	0	0	0	0	1	0	0
3/	1	**	1	1	0	0	0	1	0	0	0
3/	1	**	1	0	1	0	1	0	0	0	0
3/	2	**	1	0	0	2	0	0	0	0	0
3/	2	**	0	2	0	0	1	0	0	0	0
3/	1	**	0	1	1	1	0	0	0	0	0
1/	2	**	0	0	3	0	0	0	0	0	0
-2/	1	**	3	0	0	0	0	1	0	0	0
-6/	1	**	2	1	0	0	1	0	0	0	0
-6/	1	**	2	0	1	1	0	0	0	0	0
-6/	1	**	1	2	0	1	0	0	0	0	0
-6/	1	**	1	1	2	0	0	0	0	0	0
-2/	1	**	0	3	1	0	0	0	0	0	0
5/	2	**	4	0	0	0	1	0	0	0	0
10/	1	**	3	1	0	1	0	0	0	0	0
5/	1	**	3	0	2	0	0	0	0	0	0
15/	1	**	2	2	1	0	0	0	0	0	0
5/	2	**	1	4	0	0	0	0	0	0	0
-3/	1	**	5	0	0	1	0	0	0	0	0
-15/	1	**	4	1	1	0	0	0	0	0	0
-10/	1	**	3	3	0	0	0	0	0	0	0
7/	2	**	6	0	1	0	0	0	0	0	0
21/	2	**	5	2	0	0	0	0	0	0	0
-4/	1	**	7	1	0	0	0	0	0	0	0
1/	2	**	9	0	0	0	0	0	0	0	0

P= 2

C 3 3 =

1/	2	**	0	0	1
-1/	1	**	1	1	0
13/	24	**	3	0	0

UNCLASSIFIED

P= 2

C 3 5 =

1/	2	**	0	0	0	1
-1/	1	**	1	0	1	0
-5/	8	**	0	2	0	0
29/	16	**	2	1	0	0
-85/	128	**	4	0	0	0

P= 2

C 3 7 =

1/	2	**	0	0	0	0	1
-1/	1	**	1	0	0	1	0
-5/	4	**	0	1	1	0	0
29/	16	**	2	0	1	0	0
2/	1	**	1	2	0	0	0
-45/	16	**	3	1	0	0	0
49/	64	**	5	0	0	0	0

P= 2

C 3 9 =

1/	2	**	0	0	0	0	0	1
-1/	1	**	1	0	0	0	1	0
-5/	4	**	0	1	0	1	0	0
-5/	8	**	0	0	2	0	0	0
29/	16	**	2	0	0	1	0	0
4/	1	**	1	1	1	0	0	0
35/	48	**	0	3	0	0	0	0
-45/	16	**	3	0	1	0	0	0
-285/	64	**	2	2	0	0	0	0
1015/	256	**	4	1	0	0	0	0
-875/	1024	**	6	0	0	0	0	0

P= 2

C 311 =

1/	2	**	0	0	0	0	0	0	1
-1/	1	**	1	0	0	0	0	1	0
-5/	4	**	0	1	0	0	1	0	0
-5/	4	**	0	0	1	1	0	0	0
29/	16	**	2	0	0	0	1	0	0
4/	1	**	1	1	0	1	0	0	0
2/	1	**	1	0	2	0	0	0	0
35/	16	**	0	2	1	0	0	0	0
-45/	16	**	3	0	0	1	0	0	0
-285/	32	**	2	1	1	0	0	0	0
-25/	8	**	1	3	0	0	0	0	0
1015/	256	**	4	0	1	0	0	0	0
525/	64	**	3	2	0	0	0	0	0
-21/	4	**	5	1	0	0	0	0	0
957/	1024	**	7	0	0	0	0	0	0

P= 2

C 313 =

1/	2	**	0	0	0	0	0	0	0	1
-1/	1	**	1	0	0	0	0	0	1	0
-5/	4	**	0	1	0	0	0	1	0	0
-5/	4	**	0	0	1	0	1	0	0	0
-5/	8	**	0	0	0	2	0	0	0	0
29/	16	**	2	0	0	0	0	1	0	0
4/	1	**	1	1	0	0	1	0	0	0
4/	1	**	1	0	1	1	0	0	0	0
35/	16	**	0	2	0	1	0	0	0	0
35/	16	**	0	1	2	0	0	0	0	0
-45/	16	**	3	0	0	0	1	0	0	0
-285/	32	**	2	1	0	1	0	0	0	0
-285/	64	**	2	0	2	0	0	0	0	0
-75/	8	**	1	2	1	0	0	0	0	0
-105/	128	**	0	4	0	0	0	0	0	0
1015/	256	**	4	0	0	1	0	0	0	0
525/	32	**	3	1	1	0	0	0	0	0
1085/	128	**	2	3	0	0	0	0	0	0
-21/	4	**	5	0	1	0	0	0	0	0
-13755/	1024	**	4	2	0	0	0	0	0	0
13629/	2048	**	6	1	0	0	0	0	0	0
-33033/	32768	**	8	0	0	0	0	0	0	0

UNCLASSIFIED

P= 2

C 315 =

1/	2	**	0	0	0	0	0	0	0	0	1
-1/	1	**	1	0	0	0	0	0	0	1	0
-5/	4	**	0	1	0	0	0	0	1	0	0
-5/	4	**	0	0	1	0	0	1	0	0	0
-5/	4	**	0	0	0	1	1	0	0	0	0
29/	16	**	2	0	0	0	0	0	1	0	0
4/	1	**	1	1	0	0	0	1	0	0	0
4/	1	**	1	0	1	0	1	0	0	0	0
2/	1	**	1	0	0	2	0	0	0	0	0
35/	16	**	0	2	0	0	1	0	0	0	0
35/	8	**	0	1	1	1	0	0	0	0	0
35/	48	**	0	0	3	0	0	0	0	0	0
-45/	16	**	3	0	0	0	0	1	0	0	0
-285/	32	**	2	1	0	0	1	0	0	0	0
-285/	32	**	2	0	1	1	0	0	0	0	0
-75/	8	**	1	2	0	1	0	0	0	0	0
-75/	8	**	1	1	2	0	0	0	0	0	0
-105/	32	**	0	3	1	0	0	0	0	0	0
1015/	256	**	4	0	0	0	1	0	0	0	0
525/	32	**	3	1	0	1	0	0	0	0	0
525/	64	**	3	0	2	0	0	0	0	0	0
3255/	128	**	2	2	1	0	0	0	0	0	0
35/	8	**	1	4	0	0	0	0	0	0	0
-21/	4	**	5	0	0	1	0	0	0	0	0
-13755/	512	**	4	1	1	0	0	0	0	0	0
-2345/	128	**	3	3	0	0	0	0	0	0	0
13629/	2048	**	6	0	1	0	0	0	0	0	0
10395/	512	**	5	2	0	0	0	0	0	0	0
-16731/	2048	**	7	1	0	0	0	0	0	0	0
26455/	24576	**	9	0	0	0	0	0	0	0	0

P= 2

C 4 4 =

1/	2	**	0	0	0	1
-1/	1	**	1	0	1	0
-3/	4	**	0	2	0	0
2/	1	**	2	1	0	0
-3/	4	**	4	0	0	0

P= 2

C 4 6 =

1/	2	**	0	0	0	0	1
-1/	1	**	1	0	0	1	0
-3/	2	**	0	1	1	0	0
2/	1	**	2	0	1	0	0
5/	2	**	1	2	0	0	0
-7/	2	**	3	1	0	0	0
1/	1	**	5	0	0	0	0

P= 2

C 4 8 =

1/	2	**	0	0	0	0	0	1
-1/	1	**	1	0	0	0	1	0
-3/	2	**	0	1	0	1	0	0
-3/	4	**	0	0	2	0	0	0
2/	1	**	2	0	0	1	0	0
5/	1	**	1	1	1	0	0	0
1/	1	**	0	3	0	0	0	0
-7/	2	**	3	0	1	0	0	0
-6/	1	**	2	2	0	0	0	0
11/	2	**	4	1	0	0	0	0
-5/	4	**	6	0	0	0	0	0

UNCLASSIFIED

P= 2

C 410 =

1/	2	**	0	0	0	0	0	0	1
-1/	1	**	1	0	0	0	0	1	0
-3/	2	**	0	1	0	0	1	0	0
-3/	2	**	0	0	1	1	0	0	0
2/	1	**	2	0	0	0	1	0	0
5/	1	**	1	1	0	1	0	0	0
5/	2	**	1	0	2	0	0	0	0
3/	1	**	0	2	1	0	0	0	0
-7/	2	**	3	0	0	1	0	0	0
-12/	1	**	2	1	1	0	0	0	0
-9/	2	**	1	3	0	0	0	0	0
11/	2	**	4	0	1	0	0	0	0
12/	1	**	3	2	0	0	0	0	0
-8/	1	**	5	1	0	0	0	0	0
3/	2	**	7	0	0	0	0	0	0

P= 2

C 412 =

1/	2	**	0	0	0	0	0	0	0	1
-1/	1	**	1	0	0	0	0	0	1	0
-3/	2	**	0	1	0	0	0	1	0	0
-3/	2	**	0	0	1	0	1	0	0	0
-3/	4	**	0	0	0	2	0	0	0	0
2/	1	**	2	0	0	0	0	1	0	0
5/	1	**	1	1	0	0	1	0	0	0
5/	1	**	1	0	1	1	0	0	0	0
3/	1	**	0	2	0	1	0	0	0	0
3/	1	**	0	1	2	0	0	0	0	0
-7/	2	**	3	0	0	0	1	0	0	0
-12/	1	**	2	1	0	1	0	0	0	0
-6/	1	**	2	0	2	0	0	0	0	0
-27/	2	**	1	2	1	0	0	0	0	0
-5/	4	**	0	4	0	0	0	0	0	0
11/	2	**	4	0	0	1	0	0	0	0
24/	1	**	3	1	1	0	0	0	0	0
13/	1	**	2	3	0	0	0	0	0	0
-8/	1	**	5	0	1	0	0	0	0	0
-85/	4	**	4	2	0	0	0	0	0	0
11/	1	**	6	1	0	0	0	0	0	0
-7/	4	**	8	0	0	0	0	0	0	0

P= 2

C 414 =

1/	2	**	0	0	0	0	0	0	0	0	1
-1/	1	**	1	0	0	0	0	0	0	1	0
-3/	2	**	0	1	0	0	0	0	1	0	0
-3/	2	**	0	0	1	0	0	1	0	0	0
-3/	2	**	0	0	0	1	1	0	0	0	0
2/	1	**	2	0	0	0	0	0	1	0	0
5/	1	**	1	1	0	0	0	1	0	0	0
5/	1	**	1	0	1	0	1	0	0	0	0
5/	2	**	1	0	0	2	0	0	0	0	0
3/	1	**	0	2	0	0	1	0	0	0	0
6/	1	**	0	1	1	1	0	0	0	0	0
1/	1	**	0	0	3	0	0	0	0	0	0
-7/	2	**	3	0	0	0	0	1	0	0	0
-12/	1	**	2	1	0	0	1	0	0	0	0
-12/	1	**	2	0	1	1	0	0	0	0	0
-27/	2	**	1	2	0	1	0	0	0	0	0
-27/	2	**	1	1	2	0	0	0	0	0	0
-5/	1	**	0	3	1	0	0	0	0	0	0
11/	2	**	4	0	0	0	1	0	0	0	0
24/	1	**	3	1	0	1	0	0	0	0	0
12/	1	**	3	0	2	0	0	0	0	0	0
39/	1	**	2	2	1	0	0	0	0	0	0
7/	1	**	1	4	0	0	0	0	0	0	0
-8/	1	**	5	0	0	1	0	0	0	0	0
-85/	2	**	4	1	1	0	0	0	0	0	0
-30/	1	**	3	3	0	0	0	0	0	0	0
11/	1	**	6	0	1	0	0	0	0	0	0
69/	2	**	5	2	0	0	0	0	0	0	0
-29/	2	**	7	1	0	0	0	0	0	0	0
2/	1	**	9	0	0	0	0	0	0	0	0

UNCLASSIFIED

P= 2

C 416 =

1/	2	**	0	0	0	0	0	0	0	0	0	1
-1/	1	**	1	0	0	0	0	0	0	0	1	0
-3/	2	**	0	1	0	0	0	0	0	1	0	0
-3/	2	**	0	0	1	0	0	0	1	0	0	0
-3/	2	**	0	0	0	1	0	1	0	0	0	0
-3/	4	**	0	0	0	0	2	0	0	0	0	0
2/	1	**	2	0	0	0	0	0	0	1	0	0
5/	1	**	1	1	0	0	0	0	1	0	0	0
5/	1	**	1	0	1	0	0	1	0	0	0	0
5/	1	**	1	0	0	1	1	0	0	0	0	0
3/	1	**	0	2	0	0	0	1	0	0	0	0
6/	1	**	0	1	1	0	1	0	0	0	0	0
3/	1	**	0	1	0	2	0	0	0	0	0	0
3/	1	**	0	0	2	1	0	0	0	0	0	0
-7/	2	**	3	0	0	0	0	0	1	0	0	0
-12/	1	**	2	1	0	0	0	1	0	0	0	0
-12/	1	**	2	0	1	0	1	0	0	0	0	0
-6/	1	**	2	0	0	2	0	0	0	0	0	0
-27/	2	**	1	2	0	0	1	0	0	0	0	0
-27/	1	**	1	1	1	1	0	0	0	0	0	0
-9/	2	**	1	0	3	0	0	0	0	0	0	0
-5/	1	**	0	3	0	1	0	0	0	0	0	0
-15/	2	**	0	2	2	0	0	0	0	0	0	0
11/	2	**	4	0	0	0	0	1	0	0	0	0
24/	1	**	3	1	0	0	1	0	0	0	0	0
24/	1	**	3	0	1	1	0	0	0	0	0	0
39/	1	**	2	2	0	1	0	0	0	0	0	0
39/	1	**	2	1	2	0	0	0	0	0	0	0
28/	1	**	1	3	1	0	0	0	0	0	0	0
3/	2	**	0	5	0	0	0	0	0	0	0	0
-8/	1	**	5	0	0	0	1	0	0	0	0	0
-85/	2	**	4	1	0	1	0	0	0	0	0	0
-85/	4	**	4	0	2	0	0	0	0	0	0	0
-90/	1	**	3	2	1	0	0	0	0	0	0	0
-95/	4	**	2	4	0	0	0	0	0	0	0	0
11/	1	**	6	0	0	1	0	0	0	0	0	0
69/	1	**	5	1	1	0	0	0	0	0	0	0
60/	1	**	4	3	0	0	0	0	0	0	0	0
-29/	2	**	7	0	1	0	0	0	0	0	0	0
-105/	2	**	6	2	0	0	0	0	0	0	0	0
37/	2	**	8	1	0	0	0	0	0	0	0	0
-9/	4	**	10	0	0	0	0	0	0	0	0	0

P= 2

C 5 5 =

1/	2	**	0	0	0	0	1
-1/	1	**	1	0	0	1	0
-3/	2	**	0	1	1	0	0
2/	1	**	2	0	1	0	0
21/	8	**	1	2	0	0	0
-59/	16	**	3	1	0	0	0
689/	640	**	5	0	0	0	0

P= 2

C 5 7 =

1/	2	**	0	0	0	0	0	1
-1/	1	**	1	0	0	0	1	0
-3/	2	**	0	1	0	1	0	0
-7/	8	**	0	0	2	0	0	0
2/	1	**	2	0	0	1	0	0
45/	8	**	1	1	1	0	0	0
9/	8	**	0	3	0	0	0	0
-123/	32	**	3	0	1	0	0	0
-225/	32	**	2	2	0	0	0	0
839/	128	**	4	1	0	0	0	0
-791/	512	**	6	0	0	0	0	0

P= 2

C 5 9 =

1/	2	**	0	0	0	0	0	0	1
-1/	1	**	1	0	0	0	0	1	0
-3/	2	**	0	1	0	0	1	0	0
-7/	4	**	0	0	1	1	0	0	0
2/	1	**	2	0	0	0	1	0	0
45/	8	**	1	1	0	1	0	0	0
3/	1	**	1	0	2	0	0	0	0
57/	16	**	0	2	1	0	0	0	0
-123/	32	**	3	0	0	1	0	0	0
-465/	32	**	2	1	1	0	0	0	0
-181/	32	**	1	3	0	0	0	0	0
1713/	256	**	4	0	1	0	0	0	0
1973/	128	**	3	2	0	0	0	0	0
-5411/	512	**	5	1	0	0	0	0	0
4227/	2048	**	7	0	0	0	0	0	0

UNCLASSIFIED

P= 2

C 511 =

1/	2	**	0	0	0	0	0	0	0	1
-1/	1	**	1	0	0	0	0	0	1	0
-3/	2	**	0	1	0	0	0	1	0	0
-7/	4	**	0	0	1	0	1	0	0	0
-7/	8	**	0	0	0	2	0	0	0	0
2/	1	**	2	0	0	0	0	1	0	0
45/	8	**	1	1	0	0	1	0	0	0
6/	1	**	1	0	1	1	0	0	0	0
57/	16	**	0	2	0	1	0	0	0	0
15/	4	**	0	1	2	0	0	0	0	0
-123/	32	**	3	0	0	0	1	0	0	0
-465/	32	**	2	1	0	1	0	0	0	0
-15/	2	**	2	0	2	0	0	0	0	0
-279/	16	**	1	2	1	0	0	0	0	0
-211/	128	**	0	4	0	0	0	0	0	0
1713/	256	**	4	0	0	1	0	0	0	0
251/	8	**	3	1	1	0	0	0	0	0
2263/	128	**	2	3	0	0	0	0	0	0
-2737/	256	**	5	0	1	0	0	0	0	0
-30345/	1024	**	4	2	0	0	0	0	0	0
32487/	2048	**	6	1	0	0	0	0	0	0
-86163/	32768	**	8	0	0	0	0	0	0	0

P= 2

C 513 =

1/	2	**	0	0	0	0	0	0	0	0	1
-1/	1	**	1	0	0	0	0	0	0	1	0
-3/	2	**	0	1	0	0	0	0	1	0	0
-7/	4	**	0	0	1	0	0	1	0	0	0
-7/	4	**	0	0	0	1	1	0	0	0	0
2/	1	**	2	0	0	0	0	0	1	0	0
45/	8	**	1	1	0	0	0	1	0	0	0
6/	1	**	1	0	1	0	1	0	0	0	0
3/	1	**	1	0	0	2	0	0	0	0	0
57/	16	**	0	2	0	0	1	0	0	0	0
15/	2	**	0	1	1	1	0	0	0	0	0
21/	16	**	0	0	3	0	0	0	0	0	0
-123/	32	**	3	0	0	0	0	1	0	0	0
-465/	32	**	2	1	0	0	1	0	0	0	0
-15/	1	**	2	0	1	1	0	0	0	0	0
-279/	16	**	1	2	0	1	0	0	0	0	0
-573/	32	**	1	1	2	0	0	0	0	0	0
-27/	4	**	0	3	1	0	0	0	0	0	0
1713/	256	**	4	0	0	0	1	0	0	0	0
251/	8	**	3	1	0	1	0	0	0	0	0
2043/	128	**	3	0	2	0	0	0	0	0	0
3447/	64	**	2	2	1	0	0	0	0	0	0
637/	64	**	1	4	0	0	0	0	0	0	0
-2737/	256	**	5	0	0	1	0	0	0	0	0
-7665/	128	**	4	1	1	0	0	0	0	0	0
-175/	4	**	3	3	0	0	0	0	0	0	0
16359/	1024	**	6	0	1	0	0	0	0	0	0
26523/	512	**	5	2	0	0	0	0	0	0	0
-5775/	256	**	7	1	0	0	0	0	0	0	0
53053/	16384	**	9	0	0	0	0	0	0	0	0

UNCLASSIFIED

P= 2

C 515 =

1/	2	**	0	0	0	0	0	0	0	0	0	1
-1/	1	**	1	0	0	0	0	0	0	0	1	0
-3/	2	**	0	1	0	0	0	0	0	1	0	0
-7/	4	**	0	0	1	0	0	0	1	0	0	0
-7/	4	**	0	0	0	1	0	1	0	0	0	0
-7/	8	**	0	0	0	0	2	0	0	0	0	0
2/	1	**	2	0	0	0	0	0	0	1	0	0
45/	8	**	1	1	0	0	0	0	1	0	0	0
6/	1	**	1	0	1	0	0	1	0	0	0	0
6/	1	**	1	0	0	1	1	0	0	0	0	0
57/	16	**	0	2	0	0	0	1	0	0	0	0
15/	2	**	0	1	1	0	1	0	0	0	0	0
15/	4	**	0	1	0	2	0	0	0	0	0	0
63/	16	**	0	0	2	1	0	0	0	0	0	0
-123/	32	**	3	0	0	0	0	0	1	0	0	0
-465/	32	**	2	1	0	0	0	1	0	0	0	0
-15/	1	**	2	0	1	0	1	0	0	0	0	0
-15/	2	**	2	0	0	2	0	0	0	0	0	0
-279/	16	**	1	2	0	0	1	0	0	0	0	0
-573/	16	**	1	1	1	1	0	0	0	0	0	0
-49/	8	**	1	0	3	0	0	0	0	0	0	0
-27/	4	**	0	3	0	1	0	0	0	0	0	0
-663/	64	**	0	2	2	0	0	0	0	0	0	0
1713/	256	**	4	0	0	0	0	1	0	0	0	0
251/	8	**	3	1	0	0	1	0	0	0	0	0
2043/	64	**	3	0	1	1	0	0	0	0	0	0
3447/	64	**	2	2	0	1	0	0	0	0	0	0
6999/	128	**	2	1	2	0	0	0	0	0	0	0
2583/	64	**	1	3	1	0	0	0	0	0	0	0
707/	320	**	0	5	0	0	0	0	0	0	0	0
-2737/	256	**	5	0	0	0	1	0	0	0	0	0
-7665/	128	**	4	1	0	1	0	0	0	0	0	0
-30975/	1024	**	4	0	2	0	0	0	0	0	0	0
-33915/	256	**	3	2	1	0	0	0	0	0	0	0
-9205/	256	**	2	4	0	0	0	0	0	0	0	0
16359/	1024	**	6	0	0	1	0	0	0	0	0	0
106785/	1024	**	5	1	1	0	0	0	0	0	0	0
47775/	512	**	4	3	0	0	0	0	0	0	0	0
-92829/	4096	**	7	0	1	0	0	0	0	0	0	0
-172557/	2048	**	6	2	0	0	0	0	0	0	0	0
504075/	16384	**	8	1	0	0	0	0	0	0	0	0
-1273701/	327680	**	10	0	0	0	0	0	0	0	0	0

P= 2

C 6 6 =

1/	2	**	0	0	0	0	0	1
-1/	1	**	1	0	0	0	1	0
-3/	2	**	0	1	0	1	0	0
-1/	1	**	0	0	2	0	0	0
2/	1	**	2	0	0	1	0	0
6/	1	**	1	1	1	0	0	0
7/	6	**	0	3	0	0	0	0
-4/	1	**	3	0	1	0	0	0
-15/	2	**	2	2	0	0	0	0
7/	1	**	4	1	0	0	0	0
-5/	3	**	6	0	0	0	0	0

P= 2

C 6 8 =

1/	2	**	0	0	0	0	0	0	1
-1/	1	**	1	0	0	0	0	1	0
-3/	2	**	0	1	0	0	1	0	0
-2/	1	**	0	0	1	1	0	0	0
2/	1	**	2	0	0	0	1	0	0
6/	1	**	1	1	0	1	0	0	0
7/	2	**	1	0	2	0	0	0	0
4/	1	**	0	2	1	0	0	0	0
-4/	1	**	3	0	0	1	0	0	0
-33/	2	**	2	1	1	0	0	0	0
-13/	2	**	1	3	0	0	0	0	0
15/	2	**	4	0	1	0	0	0	0
18/	1	**	3	2	0	0	0	0	0
-25/	2	**	5	1	0	0	0	0	0
5/	2	**	7	0	0	0	0	0	0

UNCLASSIFIED

P= 2

C 610 =

1/	2	**	0	0	0	0	0	0	0	1
-1/	1	**	1	0	0	0	0	0	1	0
-3/	2	**	0	1	0	0	0	1	0	0
-2/	1	**	0	0	1	0	1	0	0	0
-1/	1	**	0	0	0	2	0	0	0	0
2/	1	**	2	0	0	0	0	1	0	0
6/	1	**	1	1	0	0	1	0	0	0
7/	1	**	1	0	1	1	0	0	0	0
4/	1	**	0	2	0	1	0	0	0	0
9/	2	**	0	1	2	0	0	0	0	0
-4/	1	**	3	0	0	0	1	0	0	0
-33/	2	**	2	1	0	1	0	0	0	0
-9/	1	**	2	0	2	0	0	0	0	0
-21/	1	**	1	2	1	0	0	0	0	0
-2/	1	**	0	4	0	0	0	0	0	0
15/	2	**	4	0	0	1	0	0	0	0
38/	1	**	3	1	1	0	0	0	0	0
22/	1	**	2	3	0	0	0	0	0	0
-13/	1	**	5	0	1	0	0	0	0	0
-75/	2	**	4	2	0	0	0	0	0	0
41/	2	**	6	1	0	0	0	0	0	0
-7/	2	**	8	0	0	0	0	0	0	0

P= 2

C 612 =

1/	2	**	0	0	0	0	0	0	0	0	1
-1/	1	**	1	0	0	0	0	0	0	1	0
-3/	2	**	0	1	0	0	0	0	1	0	0
-2/	1	**	0	0	1	0	0	1	0	0	0
-2/	1	**	0	0	0	1	1	0	0	0	0
2/	1	**	2	0	0	0	0	0	1	0	0
6/	1	**	1	1	0	0	0	1	0	0	0
7/	1	**	1	0	1	0	1	0	0	0	0
7/	2	**	1	0	0	2	0	0	0	0	0
4/	1	**	0	2	0	0	1	0	0	0	0
9/	1	**	0	1	1	1	0	0	0	0	0
5/	3	**	0	0	3	0	0	0	0	0	0
-4/	1	**	3	0	0	0	0	1	0	0	0
-33/	2	**	2	1	0	0	1	0	0	0	0
-18/	1	**	2	0	1	1	0	0	0	0	0
-21/	1	**	1	2	0	1	0	0	0	0	0
-45/	2	**	1	1	2	0	0	0	0	0	0
-17/	2	**	0	3	1	0	0	0	0	0	0
15/	2	**	4	0	0	0	1	0	0	0	0
38/	1	**	3	1	0	1	0	0	0	0	0
20/	1	**	3	0	2	0	0	0	0	0	0
69/	1	**	2	2	1	0	0	0	0	0	0
13/	1	**	1	4	0	0	0	0	0	0	0
-13/	1	**	5	0	0	1	0	0	0	0	0
-155/	2	**	4	1	1	0	0	0	0	0	0
-175/	3	**	3	3	0	0	0	0	0	0	0
21/	1	**	6	0	1	0	0	0	0	0	0
141/	2	**	5	2	0	0	0	0	0	0	0
-63/	2	**	7	1	0	0	0	0	0	0	0
14/	3	**	9	0	0	0	0	0	0	0	0

UNCLASSIFIED

P= 2

C 614 =

1/	2	**	0	0	0	0	0	0	0	0	0	1
-1/	1	**	1	0	0	0	0	0	0	0	1	0
-3/	2	**	0	1	0	0	0	0	0	1	0	0
-2/	1	**	0	0	1	0	0	0	1	0	0	0
-2/	1	**	0	0	0	1	0	1	0	0	0	0
-1/	1	**	0	0	0	0	2	0	0	0	0	0
2/	1	**	2	0	0	0	0	0	0	1	0	0
6/	1	**	1	1	0	0	0	0	1	0	0	0
7/	1	**	1	0	1	0	0	1	0	0	0	0
7/	1	**	1	0	0	1	1	0	0	0	0	0
4/	1	**	0	2	0	0	0	1	0	0	0	0
9/	1	**	0	1	1	0	1	0	0	0	0	0
9/	2	**	0	1	0	2	0	0	0	0	0	0
5/	1	**	0	0	2	1	0	0	0	0	0	0
-4/	1	**	3	0	0	0	0	0	1	0	0	0
-33/	2	**	2	1	0	0	0	1	0	0	0	0
-18/	1	**	2	0	1	0	1	0	0	0	0	0
-9/	1	**	2	0	0	2	0	0	0	0	0	0
-21/	1	**	1	2	0	0	1	0	0	0	0	0
-45/	1	**	1	1	1	1	0	0	0	0	0	0
-8/	1	**	1	0	3	0	0	0	0	0	0	0
-17/	2	**	0	3	0	1	0	0	0	0	0	0
-27/	2	**	0	2	2	0	0	0	0	0	0	0
15/	2	**	4	0	0	0	0	1	0	0	0	0
38/	1	**	3	1	0	0	1	0	0	0	0	0
40/	1	**	3	0	1	1	0	0	0	0	0	0
69/	1	**	2	2	0	1	0	0	0	0	0	0
72/	1	**	2	1	2	0	0	0	0	0	0	0
54/	1	**	1	3	1	0	0	0	0	0	0	0
3/	1	**	0	5	0	0	0	0	0	0	0	0
-13/	1	**	5	0	0	0	1	0	0	0	0	0
-155/	2	**	4	1	0	1	0	0	0	0	0	0
-40/	1	**	4	0	2	0	0	0	0	0	0	0
-180/	1	**	3	2	1	0	0	0	0	0	0	0
-50/	1	**	2	4	0	0	0	0	0	0	0	0
21/	1	**	6	0	0	1	0	0	0	0	0	0
144/	1	**	5	1	1	0	0	0	0	0	0	0
265/	2	**	4	3	0	0	0	0	0	0	0	0
-32/	1	**	7	0	1	0	0	0	0	0	0	0
-245/	1	**	6	2	0	0	0	0	0	0	0	0
46/	1	**	8	1	0	0	0	0	0	0	0	0
-6/	1	**	10	0	0	0	0	0	0	0	0	0

P= 2

C 616 =

1/	2	**	0	0	0	0	0	0	0	0	0	0	1
-1/	1	**	1	0	0	0	0	0	0	0	0	1	0
-3/	2	**	0	1	0	0	0	0	0	0	1	0	0
-2/	1	**	0	0	1	0	0	0	0	1	0	0	0
-2/	1	**	0	0	0	1	0	0	1	0	0	0	0
-2/	1	**	0	0	0	0	1	1	0	0	0	0	0
2/	1	**	2	0	0	0	0	0	0	0	1	0	0
6/	1	**	1	1	0	0	0	0	0	1	0	0	0
7/	1	**	1	0	1	0	0	0	1	0	0	0	0
7/	1	**	1	0	0	1	0	1	0	0	0	0	0
7/	2	**	1	0	0	0	2	0	0	0	0	0	0
4/	1	**	0	2	0	0	0	0	1	0	0	0	0
9/	1	**	0	1	1	0	0	1	0	0	0	0	0
9/	1	**	0	1	0	1	1	0	0	0	0	0	0
5/	1	**	0	0	2	0	1	0	0	0	0	0	0
5/	1	**	0	0	1	2	0	0	0	0	0	0	0
-4/	1	**	3	0	0	0	0	0	0	1	0	0	0
-33/	2	**	2	1	0	0	0	0	1	0	0	0	0
-18/	1	**	2	0	1	0	0	1	0	0	0	0	0
-18/	1	**	2	0	0	1	1	0	0	0	0	0	0
-21/	1	**	1	2	0	0	0	1	0	0	0	0	0
-45/	1	**	1	1	1	0	1	0	0	0	0	0	0
-45/	2	**	1	1	0	2	0	0	0	0	0	0	0
-24/	1	**	1	0	2	1	0	0	0	0	0	0	0
-17/	2	**	0	3	0	0	1	0	0	0	0	0	0
-27/	1	**	0	2	1	1	0	0	0	0	0	0	0
-19/	2	**	0	1	3	0	0	0	0	0	0	0	0
15/	2	**	4	0	0	0	0	0	1	0	0	0	0
38/	1	**	3	1	0	0	0	1	0	0	0	0	0
40/	1	**	3	0	1	0	1	0	0	0	0	0	0
20/	1	**	3	0	0	2	0	0	0	0	0	0	0
69/	1	**	2	2	0	0	1	0	0	0	0	0	0
144/	1	**	2	1	1	1	0	0	0	0	0	0	0
25/	1	**	2	0	3	0	0	0	0	0	0	0	0
54/	1	**	1	3	0	1	0	0	0	0	0	0	0
84/	1	**	1	2	2	0	0	0	0	0	0	0	0
31/	2	**	0	4	1	0	0	0	0	0	0	0	0
-13/	1	**	5	0	0	0	0	1	0	0	0	0	0
-155/	2	**	4	1	0	0	1	0	0	0	0	0	0
-80/	1	**	4	0	1	1	0	0	0	0	0	0	0
-180/	1	**	3	2	0	1	0	0	0	0	0	0	0
-185/	1	**	3	1	2	0	0	0	0	0	0	0	0
-205/	1	**	2	3	1	0	0	0	0	0	0	0	0
-45/	2	**	1	5	0	0	0	0	0	0	0	0	0
21/	1	**	6	0	0	0	1	0	0	0	0	0	0
144/	1	**	5	1	0	1	0	0	0	0	0	0	0
147/	2	**	5	0	2	0	0	0	0	0	0	0	0
405/	1	**	4	2	1	0	0	0	0	0	0	0	0
295/	2	**	3	4	0	0	0	0	0	0	0	0	0

UNCLASSIFIED

-32/	1	**	7	0	0	1	0	0	0	0	0	0	0
-497/	2	**	6	1	1	0	0	0	0	0	0	0	0
-539/	2	**	5	3	0	0	0	0	0	0	0	0	0
93/	2	**	8	0	1	0	0	0	0	0	0	0	0
200/	1	**	7	2	0	0	0	0	0	0	0	0	0
-129/	2	**	9	1	0	0	0	0	0	0	0	0	0
15/	2	**	11	0	0	0	0	0	0	0	0	0	0

P= 2

C 7 7 =

1/	2	**	0	0	0	0	0	0	1
-1/	1	**	1	0	0	0	0	1	0
-3/	2	**	0	1	0	0	1	0	0
-2/	1	**	0	0	1	1	0	0	0
2/	1	**	2	0	0	0	1	0	0
6/	1	**	1	1	0	1	0	0	0
29/	8	**	1	0	2	0	0	0	0
33/	8	**	0	2	1	0	0	0	0
-4/	1	**	3	0	0	1	0	0	0
-273/	16	**	2	1	1	0	0	0	0
-27/	4	**	1	3	0	0	0	0	0
989/	128	**	4	0	1	0	0	0	0
603/	32	**	3	2	0	0	0	0	0
-421/	32	**	5	1	0	0	0	0	0
9517/	3584	**	7	0	0	0	0	0	0

P= 2

C 7 9 =

1/	2	**	0	0	0	0	0	0	0	1
-1/	1	**	1	0	0	0	0	0	1	0
-3/	2	**	0	1	0	0	0	1	0	0
-2/	1	**	0	0	1	0	1	0	0	0
-9/	8	**	0	0	0	2	0	0	0	0
2/	1	**	2	0	0	0	0	1	0	0
6/	1	**	1	1	0	0	1	0	0	0
61/	8	**	1	0	1	1	0	0	0	0
69/	16	**	0	2	0	1	0	0	0	0
39/	8	**	0	1	2	0	0	0	0	0
-4/	1	**	3	0	0	0	1	0	0	0
-561/	32	**	2	1	0	1	0	0	0	0
-321/	32	**	2	0	2	0	0	0	0	0
-741/	32	**	1	2	1	0	0	0	0	0
-289/	128	**	0	4	0	0	0	0	0	0
2013/	256	**	4	0	0	1	0	0	0	0
2707/	64	**	3	1	1	0	0	0	0	0
3185/	128	**	2	3	0	0	0	0	0	0
-7401/	512	**	5	0	1	0	0	0	0	0
-43955/	1024	**	4	2	0	0	0	0	0	0
48673/	2048	**	6	1	0	0	0	0	0	0
-135489/	32768	**	8	0	0	0	0	0	0	0

UNCLASSIFIED

p= 2

C 711 =

1/	2	**	0	0	0	0	0	0	0	0	1
-1/	1	**	1	0	0	0	0	0	0	1	0
-3/	2	**	0	1	0	0	0	0	1	0	0
-2/	1	**	0	0	1	0	0	1	0	0	0
-9/	4	**	0	0	0	1	1	0	0	0	0
2/	1	**	2	0	0	0	0	0	1	0	0
6/	1	**	1	1	0	0	0	1	0	0	0
61/	8	**	1	0	1	0	1	0	0	0	0
4/	1	**	1	0	0	2	0	0	0	0	0
69/	16	**	0	2	0	0	1	0	0	0	0
81/	8	**	0	1	1	1	0	0	0	0	0
15/	8	**	0	0	3	0	0	0	0	0	0
-4/	1	**	3	0	0	0	0	1	0	0	0
-561/	32	**	2	1	0	0	1	0	0	0	0
-657/	32	**	2	0	1	1	0	0	0	0	0
-189/	8	**	1	2	0	1	0	0	0	0	0
-417/	16	**	1	1	2	0	0	0	0	0	0
-319/	32	**	0	3	1	0	0	0	0	0	0
2013/	256	**	4	0	0	0	1	0	0	0	0
1371/	32	**	3	1	0	1	0	0	0	0	0
1501/	64	**	3	0	2	0	0	0	0	0	0
10425/	128	**	2	2	1	0	0	0	0	0	0
125/	8	**	1	4	0	0	0	0	0	0	0
-933/	64	**	5	0	0	1	0	0	0	0	0
-47245/	512	**	4	1	1	0	0	0	0	0	0
-9095/	128	**	3	3	0	0	0	0	0	0	0
51571/	2048	**	6	0	1	0	0	0	0	0	0
44637/	512	**	5	2	0	0	0	0	0	0	0
-81237/	2048	**	7	1	0	0	0	0	0	0	0
49291/	8192	**	9	0	0	0	0	0	0	0	0

P= 2

C 713 =

1/	2	**	0	0	0	0	0	0	0	0	0	1
-1/	1	**	1	0	0	0	0	0	0	0	1	0
-3/	2	**	0	1	0	0	0	0	0	1	0	0
-2/	1	**	0	0	1	0	0	0	1	0	0	0
-9/	4	**	0	0	0	1	0	1	0	0	0	0
-9/	8	**	0	0	0	0	2	0	0	0	0	0
2/	1	**	2	0	0	0	0	0	0	1	0	0
6/	1	**	1	1	0	0	0	0	1	0	0	0
61/	8	**	1	0	1	0	0	1	0	0	0	0
8/	1	**	1	0	0	1	1	0	0	0	0	0
69/	16	**	0	2	0	0	0	1	0	0	0	0
81/	8	**	0	1	1	0	1	0	0	0	0	0
21/	4	**	0	1	0	2	0	0	0	0	0	0
93/	16	**	0	0	2	1	0	0	0	0	0	0
-4/	1	**	3	0	0	0	0	0	1	0	0	0
-561/	32	**	2	1	0	0	0	1	0	0	0	0
-657/	32	**	2	0	1	0	1	0	0	0	0	0
-21/	2	**	2	0	0	2	0	0	0	0	0	0
-189/	8	**	1	2	0	0	1	0	0	0	0	0
-849/	16	**	1	1	1	1	0	0	0	0	0	0
-309/	32	**	1	0	3	0	0	0	0	0	0	0
-81/	8	**	0	3	0	1	0	0	0	0	0	0
-1047/	64	**	0	2	2	0	0	0	0	0	0	0
2013/	256	**	4	0	0	0	0	1	0	0	0	0
1371/	32	**	3	1	0	0	1	0	0	0	0	0
3037/	64	**	3	0	1	1	0	0	0	0	0	0
5265/	64	**	2	2	0	1	0	0	0	0	0	0
11295/	128	**	2	1	2	0	0	0	0	0	0	0
4285/	64	**	1	3	1	0	0	0	0	0	0	0
243/	64	**	0	5	0	0	0	0	0	0	0	0
-933/	64	**	5	0	0	0	1	0	0	0	0	0
-5945/	64	**	4	1	0	1	0	0	0	0	0	0
-50535/	1024	**	4	0	2	0	0	0	0	0	0	0
-57825/	256	**	3	2	1	0	0	0	0	0	0	0
-16385/	256	**	2	4	0	0	0	0	0	0	0	0
25901/	1024	**	6	0	0	1	0	0	0	0	0	0
187179/	1024	**	5	1	1	0	0	0	0	0	0	0
88255/	512	**	4	3	0	0	0	0	0	0	0	0
-168711/	4096	**	7	0	1	0	0	0	0	0	0	0
-332325/	2048	**	6	2	0	0	0	0	0	0	0	0
1020063/	16384	**	8	1	0	0	0	0	0	0	0	0
-546117/	65536	**	10	0	0	0	0	0	0	0	0	0

UNCLASSIFIED

P= 2

C 715 =

1/	2	**	0	0	0	0	0	0	0	0	0	0	1
-1/	1	**	1	0	0	0	0	0	0	0	0	1	0
-3/	2	**	0	1	0	0	0	0	0	0	1	0	0
-2/	1	**	0	0	1	0	0	0	0	1	0	0	0
-9/	4	**	0	0	0	1	0	0	1	0	0	0	0
-9/	4	**	0	0	0	0	1	1	0	0	0	0	0
2/	1	**	2	0	0	0	0	0	0	0	1	0	0
6/	1	**	1	1	0	0	0	0	0	1	0	0	0
61/	8	**	1	0	1	0	0	0	1	0	0	0	0
8/	1	**	1	0	0	1	0	1	0	0	0	0	0
4/	1	**	1	0	0	0	2	0	0	0	0	0	0
69/	16	**	0	2	0	0	0	0	1	0	0	0	0
81/	8	**	0	1	1	0	0	1	0	0	0	0	0
21/	2	**	0	1	0	1	1	0	0	0	0	0	0
93/	16	**	0	0	2	0	1	0	0	0	0	0	0
6/	1	**	0	0	1	2	0	0	0	0	0	0	0
-4/	1	**	3	0	0	0	0	0	0	1	0	0	0
-561/	32	**	2	1	0	0	0	0	1	0	0	0	0
-657/	32	**	2	0	1	0	0	1	0	0	0	0	0
-21/	1	**	2	0	0	1	1	0	0	0	0	0	0
-189/	8	**	1	2	0	0	0	1	0	0	0	0	0
-849/	16	**	1	1	1	0	1	0	0	0	0	0	0
-27/	1	**	1	1	0	2	0	0	0	0	0	0	0
-471/	16	**	1	0	2	1	0	0	0	0	0	0	0
-81/	8	**	0	3	0	0	1	0	0	0	0	0	0
-531/	16	**	0	2	1	1	0	0	0	0	0	0	0
-379/	32	**	0	1	3	0	0	0	0	0	0	0	0
2013/	256	**	4	0	0	0	0	0	1	0	0	0	0
1371/	32	**	3	1	0	0	0	1	0	0	0	0	0
3037/	64	**	3	0	1	0	1	0	0	0	0	0	0
24/	1	**	3	0	0	2	0	0	0	0	0	0	0
5265/	64	**	2	2	0	0	1	0	0	0	0	0	0
1425/	8	**	2	1	1	1	0	0	0	0	0	0	0
4055/	128	**	2	0	3	0	0	0	0	0	0	0	0
135/	2	**	1	3	0	1	0	0	0	0	0	0	0
6855/	64	**	1	2	2	0	0	0	0	0	0	0	0
1285/	64	**	0	4	1	0	0	0	0	0	0	0	0
-933/	64	**	5	0	0	0	0	1	0	0	0	0	0
-5945/	64	**	4	1	0	0	1	0	0	0	0	0	0
-25425/	256	**	4	0	1	1	0	0	0	0	0	0	0
-14535/	64	**	3	2	0	1	0	0	0	0	0	0	0
-7635/	32	**	3	1	2	0	0	0	0	0	0	0	0
-8595/	32	**	2	3	1	0	0	0	0	0	0	0	0
-961/	32	**	1	5	0	0	0	0	0	0	0	0	0
25901/	1024	**	6	0	0	0	1	0	0	0	0	0	0
5871/	32	**	5	1	0	1	0	0	0	0	0	0	0
97905/	1024	**	5	0	2	0	0	0	0	0	0	0	0
275475/	512	**	4	2	1	0	0	0	0	0	0	0	0
51215/	256	**	3	4	0	0	0	0	0	0	0	0	0
-42285/	1024	**	7	0	0	1	0	0	0	0	0	0	0
-171591/	512	**	6	1	1	0	0	0	0	0	0	0	0
-95277/	256	**	5	3	0	0	0	0	0	0	0	0	0
1046661/	16384	**	8	0	1	0	0	0	0	0	0	0	0
577269/	2048	**	7	2	0	0	0	0	0	0	0	0	0
-762333/	8192	**	9	1	0	0	0	0	0	0	0	0	0
728247/	65536	**	11	0	0	0	0	0	0	0	0	0	0

P= 2

C 8 8 =

1/	2	**	0	0	0	0	0	0	0	1
-1/	1	**	1	0	0	0	0	0	1	0
-3/	2	**	0	1	0	0	0	1	0	0
-2/	1	**	0	0	1	0	1	0	0	0
-5/	4	**	0	0	0	2	0	0	0	0
2/	1	**	2	0	0	0	0	1	0	0
6/	1	**	1	1	0	0	1	0	0	0
8/	1	**	1	0	1	1	0	0	0	0
9/	2	**	0	2	0	1	0	0	0	0
5/	1	**	0	1	2	0	0	0	0	0
-4/	1	**	3	0	0	0	1	0	0	0
-18/	1	**	2	1	0	1	0	0	0	0
-21/	2	**	2	0	2	0	0	0	0	0
-24/	1	**	1	2	1	0	0	0	0	0
-19/	8	**	0	4	0	0	0	0	0	0
8/	1	**	4	0	0	1	0	0	0	0
44/	1	**	3	1	1	0	0	0	0	0
26/	1	**	2	3	0	0	0	0	0	0
-15/	1	**	5	0	1	0	0	0	0	0
-45/	1	**	4	2	0	0	0	0	0	0
25/	1	**	6	1	0	0	0	0	0	0
-35/	8	**	8	0	0	0	0	0	0	0

P= 2

C 810 =

1/	2	**	0	0	0	0	0	0	0	0	1
-1/	1	**	1	0	0	0	0	0	0	1	0
-3/	2	**	0	1	0	0	0	0	1	0	0
-2/	1	**	0	0	1	0	0	1	0	0	0
-5/	2	**	0	0	0	1	1	0	0	0	0
2/	1	**	2	0	0	0	0	0	1	0	0
6/	1	**	1	1	0	0	0	1	0	0	0
8/	1	**	1	0	1	0	1	0	0	0	0
9/	2	**	1	0	0	2	0	0	0	0	0
9/	2	**	0	2	0	0	1	0	0	0	0
11/	1	**	0	1	1	1	0	0	0	0	0
2/	1	**	0	0	3	0	0	0	0	0	0
-4/	1	**	3	0	0	0	0	1	0	0	0
-18/	1	**	2	1	0	0	1	0	0	0	0
-45/	2	**	2	0	1	1	0	0	0	0	0
-51/	2	**	1	2	0	1	0	0	0	0	0
-57/	2	**	1	1	2	0	0	0	0	0	0
-11/	1	**	0	3	1	0	0	0	0	0	0
8/	1	**	4	0	0	0	1	0	0	0	0
46/	1	**	3	1	0	1	0	0	0	0	0
26/	1	**	3	0	2	0	0	0	0	0	0
90/	1	**	2	2	1	0	0	0	0	0	0
35/	2	**	1	4	0	0	0	0	0	0	0
-31/	2	**	5	0	0	1	0	0	0	0	0
-205/	2	**	4	1	1	0	0	0	0	0	0
-80/	1	**	3	3	0	0	0	0	0	0	0
28/	1	**	6	0	1	0	0	0	0	0	0
99/	1	**	5	2	0	0	0	0	0	0	0
-91/	2	**	7	1	0	0	0	0	0	0	0
7/	1	**	9	0	0	0	0	0	0	0	0

UNCLASSIFIED

P= 2

C 812 =

1/	2	**	0	0	0	0	0	0	0	0	0	1
-1/	1	**	1	0	0	0	0	0	0	0	1	0
-3/	2	**	0	1	0	0	0	0	0	1	0	0
-2/	1	**	0	0	1	0	0	0	1	0	0	0
-5/	2	**	0	0	0	1	0	1	0	0	0	0
-5/	4	**	0	0	0	0	2	0	0	0	0	0
2/	1	**	2	0	0	0	0	0	0	1	0	0
6/	1	**	1	1	0	0	0	0	1	0	0	0
8/	1	**	1	0	1	0	0	1	0	0	0	0
9/	1	**	1	0	0	1	1	0	0	0	0	0
9/	2	**	0	2	0	0	0	1	0	0	0	0
11/	1	**	0	1	1	0	1	0	0	0	0	0
6/	1	**	0	1	0	2	0	0	0	0	0	0
13/	2	**	0	0	2	1	0	0	0	0	0	0
-4/	1	**	3	0	0	0	0	0	1	0	0	0
-18/	1	**	2	1	0	0	0	1	0	0	0	0
-45/	2	**	2	0	1	0	1	0	0	0	0	0
-12/	1	**	2	0	0	2	0	0	0	0	0	0
-51/	2	**	1	2	0	0	1	0	0	0	0	0
-60/	1	**	1	1	1	1	0	0	0	0	0	0
-11/	1	**	1	0	3	0	0	0	0	0	0	0
-23/	2	**	0	3	0	1	0	0	0	0	0	0
-75/	4	**	0	2	2	0	0	0	0	0	0	0
8/	1	**	4	0	0	0	0	1	0	0	0	0
46/	1	**	3	1	0	0	1	0	0	0	0	0
54/	1	**	3	0	1	1	0	0	0	0	0	0
93/	1	**	2	2	0	1	0	0	0	0	0	0
102/	1	**	2	1	2	0	0	0	0	0	0	0
78/	1	**	1	3	1	0	0	0	0	0	0	0
9/	2	**	0	5	0	0	0	0	0	0	0	0
-31/	2	**	5	0	0	0	1	0	0	0	0	0
-105/	1	**	4	1	0	1	0	0	0	0	0	0
-115/	2	**	4	0	2	0	0	0	0	0	0	0
-265/	1	**	3	2	1	0	0	0	0	0	0	0
-305/	4	**	2	4	0	0	0	0	0	0	0	0
57/	2	**	6	0	0	1	0	0	0	0	0	0
216/	1	**	5	1	1	0	0	0	0	0	0	0
415/	2	**	4	3	0	0	0	0	0	0	0	0
-49/	1	**	7	0	1	0	0	0	0	0	0	0
-791/	4	**	6	2	0	0	0	0	0	0	0	0
77/	1	**	8	1	0	0	0	0	0	0	0	0
-21/	2	**	10	0	0	0	0	0	0	0	0	0

P= 2

C 814 =

1/	2	**	0	0	0	0	0	0	0	0	0	0	1
-1/	1	**	1	0	0	0	0	0	0	0	0	1	0
-3/	2	**	0	1	0	0	0	0	0	0	1	0	0
-2/	1	**	0	0	1	0	0	0	0	1	0	0	0
-5/	2	**	0	0	0	1	0	0	1	0	0	0	0
-5/	2	**	0	0	0	0	1	1	0	0	0	0	0
2/	1	**	2	0	0	0	0	0	0	0	1	0	0
6/	1	**	1	1	0	0	0	0	0	1	0	0	0
8/	1	**	1	0	1	0	0	0	1	0	0	0	0
9/	1	**	1	0	0	1	0	1	0	0	0	0	0
9/	2	**	1	0	0	0	2	0	0	0	0	0	0
9/	2	**	0	2	0	0	0	0	1	0	0	0	0
11/	1	**	0	1	1	0	0	1	0	0	0	0	0
12/	1	**	0	1	0	1	1	0	0	0	0	0	0
13/	2	**	0	0	2	0	1	0	0	0	0	0	0
7/	1	**	0	0	1	2	0	0	0	0	0	0	0
-4/	1	**	3	0	0	0	0	0	0	1	0	0	0
-18/	1	**	2	1	0	0	0	0	1	0	0	0	0
-45/	2	**	2	0	1	0	0	1	0	0	0	0	0
-24/	1	**	2	0	0	1	1	0	0	0	0	0	0
-51/	2	**	1	2	0	0	0	1	0	0	0	0	0
-60/	1	**	1	1	1	0	1	0	0	0	0	0	0
-63/	2	**	1	1	0	2	0	0	0	0	0	0	0
-69/	2	**	1	0	2	1	0	0	0	0	0	0	0
-23/	2	**	0	3	0	0	1	0	0	0	0	0	0
-39/	1	**	0	2	1	1	0	0	0	0	0	0	0
-14/	1	**	0	1	3	0	0	0	0	0	0	0	0
8/	1	**	4	0	0	0	0	0	1	0	0	0	0
46/	1	**	3	1	0	0	0	1	0	0	0	0	0
54/	1	**	3	0	1	0	1	0	0	0	0	0	0
28/	1	**	3	0	0	2	0	0	0	0	0	0	0
93/	1	**	2	2	0	0	1	0	0	0	0	0	0
210/	1	**	2	1	1	1	0	0	0	0	0	0	0
38/	1	**	2	0	3	0	0	0	0	0	0	0	0
80/	1	**	1	3	0	1	0	0	0	0	0	0	0
129/	1	**	1	2	2	0	0	0	0	0	0	0	0
49/	2	**	0	4	1	0	0	0	0	0	0	0	0
-31/	2	**	5	0	0	0	0	1	0	0	0	0	0
-105/	1	**	4	1	0	0	1	0	0	0	0	0	0
-235/	2	**	4	0	1	1	0	0	0	0	0	0	0
-270/	1	**	3	2	8	1	0	0	0	0	0	0	0
-290/	1	**	3	1	2	0	0	0	0	0	0	0	0
-330/	1	**	2	3	1	0	0	0	0	0	0	0	0
-75/	2	**	1	5	0	0	0	0	0	0	0	0	0
57/	2	**	6	0	0	0	1	0	0	0	0	0	0
219/	1	**	5	1	0	1	0	0	0	0	0	0	0
117/	1	**	5	0	2	0	0	0	0	0	0	0	0
1335/	2	**	4	2	1	0	0	0	0	0	0	0	0
505/	2	**	3	4	0	0	0	0	0	0	0	0	0
-99/	2	**	7	0	0	1	0	0	0	0	0	0	0
-420/	1	**	6	1	1	0	0	0	0	0	0	0	0
-476/	1	**	5	3	0	0	0	0	0	0	0	0	0
81/	1	**	8	0	1	0	0	0	0	0	0	0	0
366/	1	**	7	2	0	0	0	0	0	0	0	0	0
-123/	1	**	9	1	0	0	0	0	0	0	0	0	0
15/	1	**	11	0	0	0	0	0	0	0	0	0	0

UNCLASSIFIED

P= 2

C 816 =

1/	2	**	0	0	0	0	0	0	0	0	0	0	0	1
-1/	1	**	1	0	0	0	0	0	0	0	0	0	1	0
-3/	2	**	0	1	0	0	0	0	0	0	0	1	0	0
-2/	1	**	0	0	1	0	0	0	0	0	1	0	0	0
-5/	2	**	0	0	0	1	0	0	0	1	0	0	0	0
-5/	2	**	0	0	0	0	1	0	1	0	0	0	0	0
-5/	4	**	0	0	0	0	0	2	0	0	0	0	0	0
2/	1	**	2	0	0	0	0	0	0	0	0	1	0	0
6/	1	**	1	1	0	0	0	0	0	0	1	0	0	0
8/	1	**	1	0	1	0	0	0	0	1	0	0	0	0
9/	1	**	1	0	0	1	0	0	1	0	0	0	0	0
9/	1	**	1	0	0	0	1	1	0	0	0	0	0	0
9/	2	**	0	2	0	0	0	0	0	1	0	0	0	0
11/	1	**	0	1	1	0	0	0	1	0	0	0	0	0
12/	1	**	0	1	0	1	0	1	0	0	0	0	0	0
6/	1	**	0	1	0	0	2	0	0	0	0	0	0	0
13/	2	**	0	0	2	0	0	1	0	0	0	0	0	0
14/	1	**	0	0	1	1	1	0	0	0	0	0	0	0
5/	2	**	0	0	0	3	0	0	0	0	0	0	0	0
-4/	1	**	3	0	0	0	0	0	0	0	1	0	0	0
-18/	1	**	2	1	0	0	0	0	0	1	0	0	0	0
-45/	2	**	2	0	1	0	0	0	1	0	0	0	0	0
-24/	1	**	2	0	0	1	0	1	0	0	0	0	0	0
-12/	1	**	2	0	0	0	2	0	0	0	0	0	0	0
-51/	2	**	1	2	0	0	0	0	1	0	0	0	0	0
-60/	1	**	1	1	1	0	0	1	0	0	0	0	0	0
-63/	1	**	1	1	0	1	1	0	0	0	0	0	0	0
-69/	2	**	1	0	2	0	1	0	0	0	0	0	0	0
-36/	1	**	1	0	1	2	0	0	0	0	0	0	0	0
-23/	2	**	0	3	0	0	0	1	0	0	0	0	0	0
-39/	1	**	0	2	1	0	1	0	0	0	0	0	0	0
-81/	4	**	0	2	0	2	0	0	0	0	0	0	0	0
-87/	2	**	0	1	2	1	0	0	0	0	0	0	0	0
-31/	8	**	0	0	4	0	0	0	0	0	0	0	0	0
8/	1	**	4	0	0	0	0	0	0	1	0	0	0	0
46/	1	**	3	1	0	0	0	0	1	0	0	0	0	0
54/	1	**	3	0	1	0	0	1	0	0	0	0	0	0
56/	1	**	3	0	0	1	1	0	0	0	0	0	0	0
93/	1	**	2	2	0	0	0	1	0	0	0	0	0	0
210/	1	**	2	1	1	0	1	0	0	0	0	0	0	0
108/	1	**	2	1	0	2	0	0	0	0	0	0	0	0
117/	1	**	2	0	2	1	0	0	0	0	0	0	0	0
80/	1	**	1	3	0	0	1	0	0	0	0	0	0	0
264/	1	**	1	2	1	1	0	0	0	0	0	0	0	0
94/	1	**	1	1	3	0	0	0	0	0	0	0	0	0
25/	1	**	0	4	0	1	0	0	0	0	0	0	0	0
53/	1	**	0	3	2	0	0	0	0	0	0	0	0	0
-31/	2	**	5	0	0	0	0	0	1	0	0	0	0	0
-105/	1	**	4	1	0	0	0	1	0	0	0	0	0	0
-235/	2	**	4	0	1	0	1	0	0	0	0	0	0	0
-60/	1	**	4	0	0	2	0	0	0	0	0	0	0	0
-270/	1	**	3	2	0	0	1	0	0	0	0	0	0	0
-590/	1	**	3	1	1	1	0	0	0	0	0	0	0	0
-105/	1	**	3	0	3	0	0	0	0	0	0	0	0	0
-335/	1	**	2	3	0	1	0	0	0	0	0	0	0	0
-1065/	2	**	2	2	2	0	0	0	0	0	0	0	0	0
-200/	1	**	1	4	1	0	0	0	0	0	0	0	0	0
-15/	2	**	0	6	0	0	0	0	0	0	0	0	0	0
57/	2	**	6	0	0	0	0	1	0	0	0	0	0	0

219/	1	**	5	1	0	0	1	0	0	0	0	0	0	0
237/	1	**	5	0	1	1	0	0	0	0	0	0	0	0
675/	1	**	4	2	0	1	0	0	0	0	0	0	0	0
1425/	2	**	4	1	2	0	0	0	0	0	0	0	0	0
1070/	1	**	3	3	1	0	0	0	0	0	0	0	0	0
180/	1	**	2	5	0	0	0	0	0	0	0	0	0	0
-99/	2	**	7	0	0	0	1	0	0	0	0	0	0	0
-847/	2	**	6	1	0	1	0	0	0	0	0	0	0	0
-889/	4	**	6	0	2	0	0	0	0	0	0	0	0	0
-3003/	2	**	5	2	1	0	0	0	0	0	0	0	0	0
-700/	1	**	4	4	0	0	0	0	0	0	0	0	0	0
163/	2	**	8	0	0	1	0	0	0	0	0	0	0	0
764/	1	**	7	1	1	0	0	0	0	0	0	0	0	0
994/	1	**	6	3	0	0	0	0	0	0	0	0	0	0
-255/	2	**	9	0	1	0	0	0	0	0	0	0	0	0
-2547/	4	**	8	2	0	0	0	0	0	0	0	0	0	0
375/	2	**	10	1	0	0	0	0	0	0	0	0	0	0
-165/	8	**	12	0	0	0	0	0	0	0	0	0	0	0

P= 2

C 9 9 =

1/	2	**	0	0	0	0	0	0	0	0	1
-1/	1	**	1	0	0	0	0	0	0	1	0
-3/	2	**	0	1	0	0	0	0	1	0	0
-2/	1	**	0	0	1	0	0	1	0	0	0
-5/	2	**	0	0	0	1	1	0	0	0	0
2/	1	**	2	0	0	0	0	0	1	0	0
6/	1	**	1	1	0	0	0	1	0	0	0
8/	1	**	1	0	1	0	1	0	0	0	0
37/	8	**	1	0	0	2	0	0	0	0	0
9/	2	**	0	2	0	0	1	0	0	0	0
45/	4	**	0	1	1	1	0	0	0	0	0
49/	24	**	0	0	3	0	0	0	0	0	0
-4/	1	**	3	0	0	0	0	1	0	0	0
-18/	1	**	2	1	0	0	1	0	0	0	0
-369/	16	**	2	0	1	1	0	0	0	0	0
-417/	16	**	1	2	0	1	0	0	0	0	0
-117/	4	**	1	1	2	0	0	0	0	0	0
-181/	16	**	0	3	1	0	0	0	0	0	0
8/	1	**	4	0	0	0	1	0	0	0	0
1501/	32	**	3	1	0	1	0	0	0	0	0
859/	32	**	3	0	2	0	0	0	0	0	0
5937/	64	**	2	2	1	0	0	0	0	0	0
2321/	128	**	1	4	0	0	0	0	0	0	0
-4033/	256	**	5	0	0	1	0	0	0	0	0
-27115/	256	**	4	1	1	0	0	0	0	0	0
-31895/	384	**	3	3	0	0	0	0	0	0	0
29639/	1024	**	6	0	1	0	0	0	0	0	0
105603/	1024	**	5	2	0	0	0	0	0	0	0
-97421/	2048	**	7	1	0	0	0	0	0	0	0
2169049/	294912	**	9	0	0	0	0	0	0	0	0

UNCLASSIFIED

P= 2

C 911 =

1/	2	**	0	0	0	0	0	0	0	0	0	1
-1/	1	**	1	0	0	0	0	0	0	0	1	0
-3/	2	**	0	1	0	0	0	0	0	1	0	0
-2/	1	**	0	0	1	0	0	0	1	0	0	0
-5/	2	**	0	0	0	1	0	1	0	0	0	0
-11/	8	**	0	0	0	0	2	0	0	0	0	0
2/	1	**	2	0	0	0	0	0	0	1	0	0
6/	1	**	1	1	0	0	0	0	1	0	0	0
8/	1	**	1	0	1	0	0	1	0	0	0	0
77/	8	**	1	0	0	1	1	0	0	0	0	0
9/	2	**	0	2	0	0	0	1	0	0	0	0
93/	8	**	0	1	1	0	1	0	0	0	0	0
51/	8	**	0	1	0	2	0	0	0	0	0	0
55/	8	**	0	0	2	1	0	0	0	0	0	0
-4/	1	**	3	0	0	0	0	0	1	0	0	0
-18/	1	**	2	1	0	0	0	1	0	0	0	0
-753/	32	**	2	0	1	0	1	0	0	0	0	0
-417/	32	**	2	0	0	2	0	0	0	0	0	0
-849/	32	**	1	2	0	0	1	0	0	0	0	0
-1029/	16	**	1	1	1	1	0	0	0	0	0	0
-47/	4	**	1	0	3	0	0	0	0	0	0	0
-49/	4	**	0	3	0	1	0	0	0	0	0	0
-651/	32	**	0	2	2	0	0	0	0	0	0	0
8/	1	**	4	0	0	0	0	1	0	0	0	0
3037/	64	**	3	1	0	0	1	0	0	0	0	0
3731/	64	**	3	0	1	1	0	0	0	0	0	0
1593/	16	**	2	2	0	1	0	0	0	0	0	0
7089/	64	**	2	1	2	0	0	0	0	0	0	0
5457/	64	**	1	3	1	0	0	0	0	0	0	0
633/	128	**	0	5	0	0	0	0	0	0	0	0
-8129/	512	**	5	0	0	0	1	0	0	0	0	0
-3595/	32	**	4	1	0	1	0	0	0	0	0	0
-32235/	512	**	4	0	2	0	0	0	0	0	0	0
-74405/	256	**	3	2	1	0	0	0	0	0	0	0
-43255/	512	**	2	4	0	0	0	0	0	0	0	0
1943/	64	**	6	0	0	1	0	0	0	0	0	0
243735/	1024	**	5	1	1	0	0	0	0	0	0	0
236885/	1024	**	4	3	0	0	0	0	0	0	0	0
-221827/	4096	**	7	0	1	0	0	0	0	0	0	0
-909895/	4096	**	6	2	0	0	0	0	0	0	0	0
2859613/	32768	**	8	1	0	0	0	0	0	0	0	0
-1577851/	131072	**	10	0	0	0	0	0	0	0	0	0

P= 2

C 913 =

1/	2	**	0	0	0	0	0	0	0	0	0	0	1
-1/	1	**	1	0	0	0	0	0	0	0	0	1	0
-3/	2	**	0	1	0	0	0	0	0	0	1	0	0
-2/	1	**	0	0	1	0	0	0	0	1	0	0	0
-5/	2	**	0	0	0	1	0	0	1	0	0	0	0
-11/	4	**	0	0	0	0	1	1	0	0	0	0	0
2/	1	**	2	0	0	0	0	0	0	0	1	0	0
6/	1	**	1	1	0	0	0	0	0	1	0	0	0
8/	1	**	1	0	1	0	0	0	1	0	0	0	0
77/	8	**	1	0	0	1	0	1	0	0	0	0	0
5/	1	**	1	0	0	0	2	0	0	0	0	0	0
9/	2	**	0	2	0	0	0	0	1	0	0	0	0
93/	8	**	0	1	1	0	0	1	0	0	0	0	0
105/	8	**	0	1	0	1	1	0	0	0	0	0	0
113/	16	**	0	0	2	0	1	0	0	0	0	0	0
61/	8	**	0	0	1	2	0	0	0	0	0	0	0
-4/	1	**	3	0	0	0	0	0	0	1	0	0	0
-18/	1	**	2	1	0	0	0	0	1	0	0	0	0
-753/	32	**	2	0	1	0	0	1	0	0	0	0	0
-849/	32	**	2	0	0	1	1	0	0	0	0	0	0
-849/	32	**	1	2	0	0	0	1	0	0	0	0	0
-261/	4	**	1	1	1	0	1	0	0	0	0	0	0
-561/	16	**	1	1	0	2	0	0	0	0	0	0	0
-1221/	32	**	1	0	2	1	0	0	0	0	0	0	0
-397/	32	**	0	3	0	0	1	0	0	0	0	0	0
-87/	2	**	0	2	1	1	0	0	0	0	0	0	0
-505/	32	**	0	1	3	0	0	0	0	0	0	0	0
8/	1	**	4	0	0	0	0	0	1	0	0	0	0
3037/	64	**	3	1	0	0	0	1	0	0	0	0	0
1883/	32	**	3	0	1	0	1	0	0	0	0	0	0
2013/	64	**	3	0	0	2	0	0	0	0	0	0	0
12849/	128	**	2	2	0	0	1	0	0	0	0	0	0
1881/	8	**	2	1	1	1	0	0	0	0	0	0	0
5489/	128	**	2	0	3	0	0	0	0	0	0	0	0
2871/	32	**	1	3	0	1	0	0	0	0	0	0	0
18801/	128	**	1	2	2	0	0	0	0	0	0	0	0
3595/	128	**	0	4	1	0	0	0	0	0	0	0	0
-8129/	512	**	5	0	0	0	0	1	0	0	0	0	0
-57835/	512	**	4	1	0	0	1	0	0	0	0	0	0
-4235/	32	**	4	0	1	1	0	0	0	0	0	0	0
-19415/	64	**	3	2	0	1	0	0	0	0	0	0	0
-84985/	256	**	3	1	2	0	0	0	0	0	0	0	0
-12185/	32	**	2	3	1	0	0	0	0	0	0	0	0
-11205/	256	**	1	5	0	0	0	0	0	0	0	0	0
62407/	2048	**	6	0	0	0	1	0	0	0	0	0	0
126183/	512	**	5	1	0	1	0	0	0	0	0	0	0
276201/	2048	**	5	0	2	0	0	0	0	0	0	0	0
793815/	1024	**	4	2	1	0	0	0	0	0	0	0	0
304255/	1024	**	3	4	0	0	0	0	0	0	0	0	0
-7127/	128	**	7	0	0	1	0	0	0	0	0	0	0
-502943/	1024	**	6	1	1	0	0	0	0	0	0	0	0
-1157933/	2048	**	5	3	0	0	0	0	0	0	0	0	0
3125263/	32768	**	8	0	1	0	0	0	0	0	0	0	0
3599947/	8192	**	7	2	0	0	0	0	0	0	0	0	0
-9801473/	65536	**	9	1	0	0	0	0	0	0	0	0	0
4855435/	262144	**	11	0	0	0	0	0	0	0	0	0	0

UNCLASSIFIED

P= 2

C 915 =

1/	2	**	0	0	0	0	0	0	0	0	0	0	0	1
-1/	1	**	1	0	0	0	0	0	0	0	0	0	1	0
-3/	2	**	0	1	0	0	0	0	0	0	0	1	0	0
-2/	1	**	0	0	1	0	0	0	0	0	1	0	0	0
-5/	2	**	0	0	0	1	0	0	0	1	0	0	0	0
-11/	4	**	0	0	0	0	1	0	1	0	0	0	0	0
-11/	8	**	0	0	0	0	0	2	0	0	0	0	0	0
2/	1	**	2	0	0	0	0	0	0	0	0	1	0	0
6/	1	**	1	1	0	0	0	0	0	0	1	0	0	0
8/	1	**	1	0	1	0	0	0	0	1	0	0	0	0
77/	8	**	1	0	0	1	0	0	1	0	0	0	0	0
10/	1	**	1	0	0	0	1	1	0	0	0	0	0	0
9/	2	**	0	2	0	0	0	0	0	1	0	0	0	0
93/	8	**	0	1	1	0	0	0	1	0	0	0	0	0
105/	8	**	0	1	0	1	0	1	0	0	0	0	0	0
27/	4	**	0	1	0	0	2	0	0	0	0	0	0	0
113/	16	**	0	0	2	0	0	1	0	0	0	0	0	0
125/	8	**	0	0	1	1	1	0	0	0	0	0	0	0
67/	24	**	0	0	0	3	0	0	0	0	0	0	0	0
-4/	1	**	3	0	0	0	0	0	0	0	1	0	0	0
-18/	1	**	2	1	0	0	0	0	0	1	0	0	0	0
-753/	32	**	2	0	1	0	0	0	1	0	0	0	0	0
-849/	32	**	2	0	0	1	0	1	0	0	0	0	0	0
-27/	2	**	2	0	0	0	2	0	0	0	0	0	0	0
-849/	32	**	1	2	0	0	0	0	1	0	0	0	0	0
-261/	4	**	1	1	1	0	0	1	0	0	0	0	0	0
-1137/	16	**	1	1	0	1	1	0	0	0	0	0	0	0
-309/	8	**	1	0	2	0	1	0	0	0	0	0	0	0
-657/	16	**	1	0	1	2	0	0	0	0	0	0	0	0
-397/	32	**	0	3	0	0	0	1	0	0	0	0	0	0
-1407/	32	**	0	2	1	0	1	0	0	0	0	0	0	0
-741/	32	**	0	2	0	2	0	0	0	0	0	0	0	0
-1605/	32	**	0	1	2	1	0	0	0	0	0	0	0	0
-575/	128	**	0	0	4	0	0	0	0	0	0	0	0	0
8/	1	**	4	0	0	0	0	0	0	1	0	0	0	0
3037/	64	**	3	1	0	0	0	0	1	0	0	0	0	0
1883/	32	**	3	0	1	0	0	1	0	0	0	0	0	0
4061/	64	**	3	0	0	1	1	0	0	0	0	0	0	0
12849/	128	**	2	2	0	0	0	1	0	0	0	0	0	0
15153/	64	**	2	1	1	0	1	0	0	0	0	0	0	0
7959/	64	**	2	1	0	2	0	0	0	0	0	0	0	0
17337/	128	**	2	0	2	1	0	0	0	0	0	0	0	0
5777/	64	**	1	3	0	0	1	0	0	0	0	0	0	0
2457/	8	**	1	2	1	1	0	0	0	0	0	0	0	0
221/	2	**	1	1	3	0	0	0	0	0	0	0	0	0
3735/	128	**	0	4	0	1	0	0	0	0	0	0	0	0
8045/	128	**	0	3	2	0	0	0	0	0	0	0	0	0
-8129/	512	**	5	0	0	0	0	0	1	0	0	0	0	0
-57835/	512	**	4	1	0	0	0	1	0	0	0	0	0	0
-68075/	512	**	4	0	1	0	1	0	0	0	0	0	0	0
-35525/	512	**	4	0	0	2	0	0	0	0	0	0	0	0
-77975/	256	**	3	2	0	0	1	0	0	0	0	0	0	0
-5515/	8	**	3	1	1	1	0	0	0	0	0	0	0	0
-47765/	384	**	3	0	3	0	0	0	0	0	0	0	0	0
-25175/	64	**	2	3	0	1	0	0	0	0	0	0	0	0
-325245/	512	**	2	2	2	0	0	0	0	0	0	0	0	0
-61695/	256	**	1	4	1	0	0	0	0	0	0	0	0	0
-14033/	1536	**	0	6	0	0	0	0	0	0	0	0	0	0
62407/	2048	**	6	0	0	0	0	1	0	0	0	0	0	0

253059/	1024	**	5	1	0	0	1	0	0	0	0	0	0	0
8901/	32	**	5	0	1	1	0	0	0	0	0	0	0	0
815235/	1024	**	4	2	0	1	0	0	0	0	0	0	0	0
1753635/	2048	**	4	1	2	0	0	0	0	0	0	0	0	0
332605/	256	**	3	3	1	0	0	0	0	0	0	0	0	0
226821/	1024	**	2	5	0	0	0	0	0	0	0	0	0	0
-228493/	4096	**	7	0	0	0	1	0	0	0	0	0	0	0
-64225/	128	**	6	1	0	1	0	0	0	0	0	0	0	0
-2203523/	8192	**	6	0	2	0	0	0	0	0	0	0	0	0
-3766497/	2048	**	5	2	1	0	0	0	0	0	0	0	0	0
-7129605/	8192	**	4	4	0	0	0	0	0	0	0	0	0	0
3178459/	32768	**	8	0	0	1	0	0	0	0	0	0	0	0
3868897/	4096	**	7	1	1	0	0	0	0	0	0	0	0	0
30728761/	24576	**	6	3	0	0	0	0	0	0	0	0	0	0
-10438967/	65536	**	9	0	1	0	0	0	0	0	0	0	0	0
-106378965/	131072	**	8	2	0	0	0	0	0	0	0	0	0	0
63607973/	262144	**	10	1	0	0	0	0	0	0	0	0	0	0
-170920321/	6291456	**	12	0	0	0	0	0	0	0	0	0	0	0

P= 2

C1010 =

1/	2	**	0	0	0	0	0	0	0	0	0	1
-1/	1	**	1	0	0	0	0	0	0	0	1	0
-3/	2	**	0	1	0	0	0	0	0	1	0	0
-2/	1	**	0	0	1	0	0	0	1	0	0	0
-5/	2	**	0	0	0	1	0	1	0	0	0	0
-3/	2	**	0	0	0	0	2	0	0	0	0	0
2/	1	**	2	0	0	0	0	0	0	1	0	0
6/	1	**	1	1	0	0	0	0	1	0	0	0
8/	1	**	1	0	1	0	0	1	0	0	0	0
10/	1	**	1	0	0	1	1	0	0	0	0	0
9/	2	**	0	2	0	0	0	1	0	0	0	0
12/	1	**	0	1	1	0	1	0	0	0	0	0
13/	2	**	0	1	0	2	0	0	0	0	0	0
7/	1	**	0	0	2	1	0	0	0	0	0	0
-4/	1	**	3	0	0	0	0	0	1	0	0	0
-18/	1	**	2	1	0	0	0	1	0	0	0	0
-24/	1	**	2	0	1	0	1	0	0	0	0	0
-27/	2	**	2	0	0	2	0	0	0	0	0	0
-27/	1	**	1	2	0	0	1	0	0	0	0	0
-66/	1	**	1	1	1	1	0	0	0	0	0	0
-12/	1	**	1	0	3	0	0	0	0	0	0	0
-25/	2	**	0	3	0	1	0	0	0	0	0	0
-21/	1	**	0	2	2	0	0	0	0	0	0	0
8/	1	**	4	0	0	0	0	1	0	0	0	0
48/	1	**	3	1	0	0	1	0	0	0	0	0
60/	1	**	3	0	1	1	0	0	0	0	0	0
102/	1	**	2	2	0	1	0	0	0	0	0	0
114/	1	**	2	1	2	0	0	0	0	0	0	0
88/	1	**	1	3	1	0	0	0	0	0	0	0
51/	10	**	0	5	0	0	0	0	0	0	0	0
-16/	1	**	5	0	0	0	1	0	0	0	0	0
-115/	1	**	4	1	0	1	0	0	0	0	0	0
-65/	1	**	4	0	2	0	0	0	0	0	0	0

UNCLASSIFIED

-300/	1	**	3	2	1	0	0	0	0	0	0	0
-175/	2	**	2	4	0	0	0	0	0	0	0	0
31/	1	**	6	0	0	1	0	0	0	0	0	0
246/	1	**	5	1	1	0	0	0	0	0	0	0
240/	1	**	4	3	0	0	0	0	0	0	0	0
-56/	1	**	7	0	1	0	0	0	0	0	0	0
-231/	1	**	6	2	0	0	0	0	0	0	0	0
91/	1	**	8	1	0	0	0	0	0	0	0	0
-63/	5	**	10	0	0	0	0	0	0	0	0	0

P= 2

C1012 =

1/	2	**	0	0	0	0	0	0	0	0	0	0	1
-1/	1	**	1	0	0	0	0	0	0	0	0	1	0
-3/	2	**	0	1	0	0	0	0	0	0	1	0	0
-2/	1	**	0	0	1	0	0	0	0	1	0	0	0
-5/	2	**	0	0	0	1	0	0	1	0	0	0	0
-3/	1	**	0	0	0	0	1	1	0	0	0	0	0
2/	1	**	2	0	0	0	0	0	0	0	1	0	0
6/	1	**	1	1	0	0	0	0	0	1	0	0	0
8/	1	**	1	0	1	0	0	0	1	0	0	0	0
10/	1	**	1	0	0	1	0	1	0	0	0	0	0
11/	2	**	1	0	0	0	2	0	0	0	0	0	0
9/	2	**	0	2	0	0	0	0	1	0	0	0	0
12/	1	**	0	1	1	0	0	1	0	0	0	0	0
14/	1	**	0	1	0	1	1	0	0	0	0	0	0
15/	2	**	0	0	2	0	1	0	0	0	0	0	0
8/	1	**	0	0	1	2	0	0	0	0	0	0	0
-4/	1	**	3	0	0	0	0	0	0	1	0	0	0
-18/	1	**	2	1	0	0	0	0	1	0	0	0	0
-24/	1	**	2	0	1	0	0	1	0	0	0	0	0
-57/	2	**	2	0	0	1	1	0	0	0	0	0	0
-27/	1	**	1	2	0	0	0	1	0	0	0	0	0
-69/	1	**	1	1	1	0	1	0	0	0	0	0	0
-75/	2	**	1	1	0	2	0	0	0	0	0	0	0
-81/	2	**	1	0	2	1	0	0	0	0	0	0	0
-13/	1	**	0	3	0	0	1	0	0	0	0	0	0
-93/	2	**	0	2	1	1	0	0	0	0	0	0	0
-17/	1	**	0	1	3	0	0	0	0	0	0	0	0
8/	1	**	4	0	0	0	0	0	1	0	0	0	0
48/	1	**	3	1	0	0	0	1	0	0	0	0	0
62/	1	**	3	0	1	0	1	0	0	0	0	0	0
34/	1	**	3	0	0	2	0	0	0	0	0	0	0
105/	1	**	2	2	0	0	1	0	0	0	0	0	0
252/	1	**	2	1	1	1	0	0	0	0	0	0	0
46/	1	**	2	0	3	0	0	0	0	0	0	0	0
96/	1	**	1	3	0	1	0	0	0	0	0	0	0
159/	1	**	1	2	2	0	0	0	0	0	0	0	0
61/	2	**	0	4	1	0	0	0	0	0	0	0	0
-16/	1	**	5	0	0	0	0	1	0	0	0	0	0
-235/	2	**	4	1	0	0	1	0	0	0	0	0	0
-285/	2	**	4	0	1	1	0	0	0	0	0	0	0
-325/	1	**	3	2	0	1	0	0	0	0	0	0	0

-360/	1	**	3	1	2	0	0	0	0	0	0	0	0
-415/	1	**	2	3	1	0	0	0	0	0	0	0	0
-48/	1	**	1	5	0	0	0	0	0	0	0	0	0
63/	2	**	6	0	0	0	1	0	0	0	0	0	0
264/	1	**	5	1	0	1	0	0	0	0	0	0	0
147/	1	**	5	0	2	0	0	0	0	0	0	0	0
1695/	2	**	4	2	1	0	0	0	0	0	0	0	0
655/	2	**	3	4	0	0	0	0	0	0	0	0	0
-119/	2	**	7	0	0	1	0	0	0	0	0	0	0
-539/	1	**	6	1	1	0	0	0	0	0	0	0	0
-1253/	2	**	5	3	0	0	0	0	0	0	0	0	0
105/	1	**	8	0	1	0	0	0	0	0	0	0	0
490/	1	**	7	2	0	0	0	0	0	0	0	0	0
-168/	1	**	9	1	0	0	0	0	0	0	0	0	0
21/	1	**	11	0	0	0	0	0	0	0	0	0	0

P= 2

C1014 =

1/	2	**	0	0	0	0	0	0	0	0	0	0	0	1
-1/	1	**	1	0	0	0	0	0	0	0	0	0	1	0
-3/	2	**	0	1	0	0	0	0	0	0	0	1	0	0
-2/	1	**	0	0	1	0	0	0	0	0	1	0	0	0
-5/	2	**	0	0	0	1	0	0	0	1	0	0	0	0
-3/	1	**	0	0	0	0	1	0	1	0	0	0	0	0
-3/	2	**	0	0	0	0	0	2	0	0	0	0	0	0
2/	1	**	2	0	0	0	0	0	0	0	0	1	0	0
6/	1	**	1	1	0	0	0	0	0	0	1	0	0	0
8/	1	**	1	0	1	0	0	0	0	1	0	0	0	0
10/	1	**	1	0	0	1	0	0	1	0	0	0	0	0
11/	1	**	1	0	0	0	1	1	0	0	0	0	0	0
9/	2	**	0	2	0	0	0	0	0	1	0	0	0	0
12/	1	**	0	1	1	0	0	0	1	0	0	0	0	0
14/	1	**	0	1	0	1	0	1	0	0	0	0	0	0
15/	2	**	0	1	0	0	2	0	0	0	0	0	0	0
15/	2	**	0	0	2	0	0	1	0	0	0	0	0	0
17/	1	**	0	0	1	1	1	0	0	0	0	0	0	0
3/	1	**	0	0	0	3	0	0	0	0	0	0	0	0
-4/	1	**	3	0	0	0	0	0	0	0	1	0	0	0
-18/	1	**	2	1	0	0	0	0	0	1	0	0	0	0
-24/	1	**	2	0	1	0	0	0	1	0	0	0	0	0
-57/	2	**	2	0	0	1	0	1	0	0	0	0	0	0
-15/	1	**	2	0	0	0	2	0	0	0	0	0	0	0
-27/	1	**	1	2	0	0	0	0	1	0	0	0	0	0
-69/	1	**	1	1	1	0	0	1	0	0	0	0	0	0
-78/	1	**	1	1	0	1	1	0	0	0	0	0	0	0
-42/	1	**	1	0	2	0	1	0	0	0	0	0	0	0
-45/	1	**	1	0	1	2	0	0	0	0	0	0	0	0
-13/	1	**	0	3	0	0	0	1	0	0	0	0	0	0
-48/	1	**	0	2	1	0	1	0	0	0	0	0	0	0
-51/	2	**	0	2	0	2	0	0	0	0	0	0	0	0
-111/	2	**	0	1	2	1	0	0	0	0	0	0	0	0
-5/	1	**	0	0	4	0	0	0	0	0	0	0	0	0
8/	1	**	4	0	0	0	0	0	0	1	0	0	0	0
48/	1	**	3	1	0	0	0	0	1	0	0	0	0	0

UNCLASSIFIED

62/	1	**	3	0	1	0	0	1	0	0	0	0	0	0
70/	1	**	3	0	0	1	1	0	0	0	0	0	0	0
105/	1	**	2	2	0	0	0	1	0	0	0	0	0	0
258/	1	**	2	1	1	0	1	0	0	0	0	0	0	0
138/	1	**	2	1	0	2	0	0	0	0	0	0	0	0
150/	1	**	2	0	2	1	0	0	0	0	0	0	0	0
98/	1	**	1	3	0	0	1	0	0	0	0	0	0	0
342/	1	**	1	2	1	1	0	0	0	0	0	0	0	0
124/	1	**	1	1	3	0	0	0	0	0	0	0	0	0
65/	2	**	0	4	0	1	0	0	0	0	0	0	0	0
71/	1	**	0	3	2	0	0	0	0	0	0	0	0	0
-16/	1	**	5	0	0	0	0	0	1	0	0	0	0	0
-235/	2	**	4	1	0	0	0	1	0	0	0	0	0	0
-145/	1	**	4	0	1	0	1	0	0	0	0	0	0	0
-155/	2	**	4	0	0	2	0	0	0	0	0	0	0	0
-330/	1	**	3	2	0	0	1	0	0	0	0	0	0	0
-770/	1	**	3	1	1	1	0	0	0	0	0	0	0	0
-140/	1	**	3	0	3	0	0	0	0	0	0	0	0	0
-440/	1	**	2	3	0	1	0	0	0	0	0	0	0	0
-720/	1	**	2	2	2	0	0	0	0	0	0	0	0	0
-275/	1	**	1	4	1	0	0	0	0	0	0	0	0	0
-21/	2	**	0	6	0	0	0	0	0	0	0	0	0	0
63/	2	**	6	0	0	0	0	1	0	0	0	0	0	0
267/	1	**	5	1	0	0	1	0	0	0	0	0	0	0
312/	1	**	5	0	1	1	0	0	0	0	0	0	0	0
1785/	2	**	4	2	0	1	0	0	0	0	0	0	0	0
975/	1	**	4	1	2	0	0	0	0	0	0	0	0	0
1490/	1	**	3	3	1	0	0	0	0	0	0	0	0	0
513/	2	**	2	5	0	0	0	0	0	0	0	0	0	0
-60/	1	**	7	0	0	0	1	0	0	0	0	0	0	0
-1127/	2	**	6	1	0	1	0	0	0	0	0	0	0	0
-308/	1	**	6	0	2	0	0	0	0	0	0	0	0	0
-2121/	1	**	5	2	1	0	0	0	0	0	0	0	0	0
-1015/	1	**	4	4	0	0	0	0	0	0	0	0	0	0
109/	1	**	8	0	0	1	0	0	0	0	0	0	0	0
1096/	1	**	7	1	1	0	0	0	0	0	0	0	0	0
1470/	1	**	6	3	0	0	0	0	0	0	0	0	0	0
-186/	1	**	9	0	1	0	0	0	0	0	0	0	0	0
-963/	1	**	8	2	0	0	0	0	0	0	0	0	0	0
291/	1	**	10	1	0	0	0	0	0	0	0	0	0	0
-33/	1	**	12	0	0	0	0	0	0	0	0	0	0	0

P= 2

C1016 =

1/	2	**	0	0	0	0	0	0	0	0	0	0	0	0	1
-1/	1	**	1	0	0	0	0	0	0	0	0	0	0	1	0
-3/	2	**	0	1	0	0	0	0	0	0	0	0	1	0	0
-2/	1	**	0	0	1	0	0	0	0	0	0	1	0	0	0
-5/	2	**	0	0	0	1	0	0	0	0	1	0	0	0	0
-3/	1	**	0	0	0	0	1	0	0	1	0	0	0	0	0
-3/	1	**	0	0	0	0	0	1	1	0	0	0	0	0	0
2/	1	**	2	0	0	0	0	0	0	0	0	0	1	0	0
6/	1	**	1	1	0	0	0	0	0	0	0	1	0	0	0
8/	1	**	1	0	1	0	0	0	0	0	1	0	0	0	0
10/	1	**	1	0	0	1	0	0	0	1	0	0	0	0	0
11/	1	**	1	0	0	0	1	0	1	0	0	0	0	0	0
11/	2	**	1	0	0	0	0	2	0	0	0	0	0	0	0
9/	2	**	0	2	0	0	0	0	0	0	1	0	0	0	0
12/	1	**	0	1	1	0	0	0	0	1	0	0	0	0	0
14/	1	**	0	1	0	1	0	0	1	0	0	0	0	0	0
15/	1	**	0	1	0	0	1	1	0	0	0	0	0	0	0
15/	2	**	0	0	2	0	0	0	1	0	0	0	0	0	0
17/	1	**	0	0	1	1	0	1	0	0	0	0	0	0	0
9/	1	**	0	0	1	0	2	0	0	0	0	0	0	0	0
19/	2	**	0	0	0	2	1	0	0	0	0	0	0	0	0
-4/	1	**	3	0	0	0	0	0	0	0	0	1	0	0	0
-18/	1	**	2	1	0	0	0	0	0	0	1	0	0	0	0
-24/	1	**	2	0	1	0	0	0	0	1	0	0	0	0	0
-57/	2	**	2	0	0	1	0	0	1	0	0	0	0	0	0
-30/	1	**	2	0	0	0	1	1	0	0	0	0	0	0	0
-27/	1	**	1	2	0	0	0	0	0	1	0	0	0	0	0
-69/	1	**	1	1	1	0	0	0	1	0	0	0	0	0	0
-78/	1	**	1	1	0	1	0	1	0	0	0	0	0	0	0
-81/	2	**	1	1	0	0	2	0	0	0	0	0	0	0	0
-42/	1	**	1	0	2	0	0	1	0	0	0	0	0	0	0
-93/	1	**	1	0	1	1	1	0	0	0	0	0	0	0	0
-33/	2	**	1	0	0	3	0	0	0	0	0	0	0	0	0
-13/	1	**	0	3	0	0	0	0	1	0	0	0	0	0	0
-48/	1	**	0	2	1	0	0	1	0	0	0	0	0	0	0
-105/	2	**	0	2	0	1	1	0	0	0	0	0	0	0	0
-57/	1	**	0	1	2	0	1	0	0	0	0	0	0	0	0
-60/	1	**	0	1	1	2	0	0	0	0	0	0	0	0	0
-43/	2	**	0	0	3	1	0	0	0	0	0	0	0	0	0
8/	1	**	4	0	0	0	0	0	0	0	1	0	0	0	0
48/	1	**	3	1	0	0	0	0	0	1	0	0	0	0	0
62/	1	**	3	0	1	0	0	0	1	0	0	0	0	0	0
70/	1	**	3	0	0	1	0	1	0	0	0	0	0	0	0
36/	1	**	3	0	0	0	2	0	0	0	0	0	0	0	0
105/	1	**	2	2	0	0	0	0	1	0	0	0	0	0	0
258/	1	**	2	1	1	0	0	1	0	0	0	0	0	0	0
282/	1	**	2	1	0	1	1	0	0	0	0	0	0	0	0
153/	1	**	2	0	2	0	1	0	0	0	0	0	0	0	0
162/	1	**	2	0	1	2	0	0	0	0	0	0	0	0	0
98/	1	**	1	3	0	0	0	1	0	0	0	0	0	0	0
348/	1	**	1	2	1	0	1	0	0	0	0	0	0	0	0
183/	1	**	1	2	0	2	0	0	0	0	0	0	0	0	0
396/	1	**	1	1	2	1	0	0	0	0	0	0	0	0	0
71/	2	**	1	0	4	0	0	0	0	0	0	0	0	0	0
33/	1	**	0	4	0	0	1	0	0	0	0	0	0	0	0
150/	1	**	0	3	1	1	0	0	0	0	0	0	0	0	0
81/	1	**	0	2	3	0	0	0	0	0	0	0	0	0	0
-16/	1	**	5	0	0	0	0	0	0	1	0	0	0	0	0

UNCLASSIFIED

-235/	2	**	4	1	0	0	0	0	1	0	0	0	0	0	0
-145/	1	**	4	0	1	0	0	1	0	0	0	0	0	0	0
-315/	2	**	4	0	0	1	1	0	0	0	0	0	0	0	0
-330/	1	**	3	2	0	0	0	1	0	0	0	0	0	0	0
-780/	1	**	3	1	1	0	1	0	0	0	0	0	0	0	0
-410/	1	**	3	1	0	2	0	0	0	0	0	0	0	0	0
-445/	1	**	3	0	2	1	0	0	0	0	0	0	0	0	0
-445/	1	**	2	3	0	0	1	0	0	0	0	0	0	0	0
-1515/	1	**	2	2	1	1	0	0	0	0	0	0	0	0	0
-545/	1	**	2	1	3	0	0	0	0	0	0	0	0	0	0
-575/	2	**	1	4	0	1	0	0	0	0	0	0	0	0	0
-620/	1	**	1	3	2	0	0	0	0	0	0	0	0	0	0
-141/	2	**	0	5	1	0	0	0	0	0	0	0	0	0	0
63/	2	**	6	0	0	0	0	0	1	0	0	0	0	0	0
267/	1	**	5	1	0	0	0	1	0	0	0	0	0	0	0
315/	1	**	5	0	1	0	1	0	0	0	0	0	0	0	0
165/	1	**	5	0	0	2	0	0	0	0	0	0	0	0	0
900/	1	**	4	2	0	0	1	0	0	0	0	0	0	0	0
2040/	1	**	4	1	1	1	0	0	0	0	0	0	0	0	0
735/	2	**	4	0	3	0	0	0	0	0	0	0	0	0	0
1550/	1	**	3	3	0	1	0	0	0	0	0	0	0	0	0
2505/	1	**	3	2	2	0	0	0	0	0	0	0	0	0	0
1425/	1	**	2	4	1	0	0	0	0	0	0	0	0	0	0
108/	1	**	1	6	0	0	0	0	0	0	0	0	0	0	0
-60/	1	**	7	0	0	0	0	1	0	0	0	0	0	0	0
-567/	1	**	6	1	0	0	1	0	0	0	0	0	0	0	0
-1281/	2	**	6	0	1	1	0	0	0	0	0	0	0	0	0
-4389/	2	**	5	2	0	1	0	0	0	0	0	0	0	0	0
-4725/	2	**	5	1	2	0	0	0	0	0	0	0	0	0	0
-4480/	1	**	4	3	1	0	0	0	0	0	0	0	0	0	0
-2037/	2	**	3	5	0	0	0	0	0	0	0	0	0	0	0
219/	2	**	8	0	0	0	1	0	0	0	0	0	0	0	0
1128/	1	**	7	1	0	1	0	0	0	0	0	0	0	0	0
606/	1	**	7	0	2	0	0	0	0	0	0	0	0	0	0
4830/	1	**	6	2	1	0	0	0	0	0	0	0	0	0	0
2744/	1	**	5	4	0	0	0	0	0	0	0	0	0	0	0
-381/	2	**	9	0	0	1	0	0	0	0	0	0	0	0	0
-4185/	2	**	8	1	1	0	0	0	0	0	0	0	0	0	0
-3168/	1	**	7	3	0	0	0	0	0	0	0	0	0	0	0
627/	2	**	10	0	1	0	0	0	0	0	0	0	0	0	0
3555/	2	**	9	2	0	0	0	0	0	0	0	0	0	0	0
-957/	2	**	11	1	0	0	0	0	0	0	0	0	0	0	0
99/	2	**	13	0	0	0	0	0	0	0	0	0	0	0	0

P= 2

C1111 =

1/	2	**	0	0	0	0	0	0	0	0	0	0	1
-1/	1	**	1	0	0	0	0	0	0	0	0	1	0
-3/	2	**	0	1	0	0	0	0	0	0	1	0	0
-2/	1	**	0	0	1	0	0	0	0	1	0	0	0
-5/	2	**	0	0	0	1	0	0	1	0	0	0	0
-3/	1	**	0	0	0	0	1	1	0	0	0	0	0
2/	1	**	2	0	0	0	0	0	0	0	1	0	0
6/	1	**	1	1	0	0	0	0	0	1	0	0	0
8/	1	**	1	0	1	0	0	0	1	0	0	0	0
10/	1	**	1	0	0	1	0	1	0	0	0	0	0
45/	8	**	1	0	0	0	2	0	0	0	0	0	0
9/	2	**	0	2	0	0	0	0	1	0	0	0	0
12/	1	**	0	1	1	0	0	1	0	0	0	0	0
57/	4	**	0	1	0	1	1	0	0	0	0	0	0
61/	8	**	0	0	2	0	1	0	0	0	0	0	0
65/	8	**	0	0	1	2	0	0	0	0	0	0	0
-4/	1	**	3	0	0	0	0	0	0	1	0	0	0
-18/	1	**	2	1	0	0	0	0	1	0	0	0	0
-24/	1	**	2	0	1	0	0	1	0	0	0	0	0
-465/	16	**	2	0	0	1	1	0	0	0	0	0	0
-27/	1	**	1	2	0	0	0	1	0	0	0	0	0
-561/	8	**	1	1	1	0	1	0	0	0	0	0	0
-153/	4	**	1	1	0	2	0	0	0	0	0	0	0
-165/	4	**	1	0	2	1	0	0	0	0	0	0	0
-211/	16	**	0	3	0	0	1	0	0	0	0	0	0
-759/	16	**	0	2	1	1	0	0	0	0	0	0	0
-139/	8	**	0	1	3	0	0	0	0	0	0	0	0
8/	1	**	4	0	0	0	0	0	1	0	0	0	0
48/	1	**	3	1	0	0	0	1	0	0	0	0	0
2013/	32	**	3	0	1	0	1	0	0	0	0	0	0
1115/	32	**	3	0	0	2	0	0	0	0	0	0	0
6807/	64	**	2	2	0	0	1	0	0	0	0	0	0
8241/	32	**	2	1	1	1	0	0	0	0	0	0	0
47/	1	**	2	0	3	0	0	0	0	0	0	0	0
98/	1	**	1	3	0	1	0	0	0	0	0	0	0
5217/	32	**	1	2	2	0	0	0	0	0	0	0	0
4009/	128	**	0	4	1	0	0	0	0	0	0	0	0
-16/	1	**	5	0	0	0	0	1	0	0	0	0	0
-30405/	256	**	4	1	0	0	1	0	0	0	0	0	0
-37355/	256	**	4	0	1	1	0	0	0	0	0	0	0
-21255/	64	**	3	2	0	1	0	0	0	0	0	0	0
-23645/	64	**	3	1	2	0	0	0	0	0	0	0	0
-54615/	128	**	2	3	1	0	0	0	0	0	0	0	0
-3165/	64	**	1	5	0	0	0	0	0	0	0	0	0
32537/	1024	**	6	0	0	0	1	0	0	0	0	0	0
34533/	128	**	5	1	0	1	0	0	0	0	0	0	0
77409/	512	**	5	0	2	0	0	0	0	0	0	0	0
893295/	1024	**	4	2	1	0	0	0	0	0	0	0	0
173095/	512	**	3	4	0	0	0	0	0	0	0	0	0
-62203/	1024	**	7	0	0	1	0	0	0	0	0	0	0
-1137843/	2048	**	6	1	1	0	0	0	0	0	0	0	0
-10367/	16	**	5	3	0	0	0	0	0	0	0	0	0
3550177/	32768	**	8	0	1	0	0	0	0	0	0	0	0
2080245/	4096	**	7	2	0	0	0	0	0	0	0	0	0
-2860103/	16384	**	9	1	0	0	0	0	0	0	0	0	0
31560989/	1441792	**	11	0	0	0	0	0	0	0	0	0	0

UNCLASSIFIED

P= 2

C1113 =

1/	2	**	0	0	0	0	0	0	0	0	0	0	0	1
-1/	1	**	1	0	0	0	0	0	0	0	0	0	1	0
-3/	2	**	0	1	0	0	0	0	0	0	0	1	0	0
-2/	1	**	0	0	1	0	0	0	0	0	1	0	0	0
-5/	2	**	0	0	0	1	0	0	0	1	0	0	0	0
-3/	1	**	0	0	0	0	1	0	1	0	0	0	0	0
-13/	8	**	0	0	0	0	0	2	0	0	0	0	0	0
2/	1	**	2	0	0	0	0	0	0	0	0	1	0	0
6/	1	**	1	1	0	0	0	0	0	0	1	0	0	0
8/	1	**	1	0	1	0	0	0	0	1	0	0	0	0
10/	1	**	1	0	0	1	0	0	1	0	0	0	0	0
93/	8	**	1	0	0	0	1	1	0	0	0	0	0	0
9/	2	**	0	2	0	0	0	0	0	1	0	0	0	0
12/	1	**	0	1	1	0	0	0	1	0	0	0	0	0
117/	8	**	0	1	0	1	0	1	0	0	0	0	0	0
63/	8	**	0	1	0	0	2	0	0	0	0	0	0	0
125/	16	**	0	0	2	0	0	1	0	0	0	0	0	0
71/	4	**	0	0	1	1	1	0	0	0	0	0	0	0
25/	8	**	0	0	0	3	0	0	0	0	0	0	0	0
-4/	1	**	3	0	0	0	0	0	0	0	1	0	0	0
-18/	1	**	2	1	0	0	0	0	0	1	0	0	0	0
-24/	1	**	2	0	1	0	0	0	1	0	0	0	0	0
-945/	32	**	2	0	0	1	0	1	0	0	0	0	0	0
-513/	32	**	2	0	0	0	2	0	0	0	0	0	0	0
-27/	1	**	1	2	0	0	0	0	1	0	0	0	0	0
-1137/	16	**	1	1	1	0	0	1	0	0	0	0	0	0
-1317/	16	**	1	1	0	1	1	0	0	0	0	0	0	0
-1413/	32	**	1	0	2	0	1	0	0	0	0	0	0	0
-189/	4	**	1	0	1	2	0	0	0	0	0	0	0	0
-427/	32	**	0	3	0	0	0	1	0	0	0	0	0	0
-201/	4	**	0	2	1	0	1	0	0	0	0	0	0	0
-867/	32	**	0	2	0	2	0	0	0	0	0	0	0	0
-1881/	32	**	0	1	2	1	0	0	0	0	0	0	0	0
-685/	128	**	0	0	4	0	0	0	0	0	0	0	0	0
8/	1	**	4	0	0	0	0	0	0	1	0	0	0	0
48/	1	**	3	1	0	0	0	0	1	0	0	0	0	0
4061/	64	**	3	0	1	0	0	1	0	0	0	0	0	0
4755/	64	**	3	0	0	1	1	0	0	0	0	0	0	0
13719/	128	**	2	2	0	0	0	1	0	0	0	0	0	0
2169/	8	**	2	1	1	0	1	0	0	0	0	0	0	0
9393/	64	**	2	1	0	2	0	0	0	0	0	0	0	0
20337/	128	**	2	0	2	1	0	0	0	0	0	0	0	0
6557/	64	**	1	3	0	0	1	0	0	0	0	0	0	0
11649/	32	**	1	2	1	1	0	0	0	0	0	0	0	0
8497/	64	**	1	1	3	0	0	0	0	0	0	0	0	0
4439/	128	**	0	4	0	1	0	0	0	0	0	0	0	0
9751/	128	**	0	3	2	0	0	0	0	0	0	0	0	0
-16/	1	**	5	0	0	0	0	0	1	0	0	0	0	0
-61125/	512	**	4	1	0	0	0	1	0	0	0	0	0	0
-4875/	32	**	4	0	1	0	1	0	0	0	0	0	0	0
-42475/	512	**	4	0	0	2	0	0	0	0	0	0	0	0
-88275/	256	**	3	2	0	0	1	0	0	0	0	0	0	0
-13145/	16	**	3	1	1	1	0	0	0	0	0	0	0	0
-38365/	256	**	3	0	3	0	0	0	0	0	0	0	0	0
-15025/	32	**	2	3	0	1	0	0	0	0	0	0	0	0
-396915/	512	**	2	2	2	0	0	0	0	0	0	0	0	0
-38035/	128	**	1	4	1	0	0	0	0	0	0	0	0	0
-5845/	512	**	0	6	0	0	0	0	0	0	0	0	0	0
65305/	2048	**	6	0	0	0	0	1	0	0	0	0	0	0

284895/	1024	**	5	1	0	0	1	0	0	0	0	0	0	0
171051/	512	**	5	0	1	1	0	0	0	0	0	0	0	0
976455/	1024	**	4	2	0	1	0	0	0	0	0	0	0	0
2155545/	2048	**	4	1	2	0	0	0	0	0	0	0	0	0
51695/	32	**	3	3	1	0	0	0	0	0	0	0	0	0
286455/	1024	**	2	5	0	0	0	0	0	0	0	0	0	0
-255049/	4096	**	7	0	0	0	1	0	0	0	0	0	0	0
-616917/	1024	**	6	1	0	1	0	0	0	0	0	0	0	0
-2734669/	8192	**	6	0	2	0	0	0	0	0	0	0	0	0
-2362521/	1024	**	5	2	1	0	0	0	0	0	0	0	0	0
-9108155/	8192	**	4	4	0	0	0	0	0	0	0	0	0	0
3815827/	32768	**	8	0	0	1	0	0	0	0	0	0	0	0
612603/	512	**	7	1	1	0	0	0	0	0	0	0	0	0
13254913/	8192	**	6	3	0	0	0	0	0	0	0	0	0	0
-6676315/	32768	**	9	0	1	0	0	0	0	0	0	0	0	0
-139703931/	131072	**	8	2	0	0	0	0	0	0	0	0	0	0
84974743/	262144	**	10	1	0	0	0	0	0	0	0	0	0	0
-77692693/	2097152	**	12	0	0	0	0	0	0	0	0	0	0	0

P= 2

C1115 =

1/	2	**	0	0	0	0	0	0	0	0	0	0	0	0	1
-1/	1	**	1	0	0	0	0	0	0	0	0	0	0	1	0
-3/	2	**	0	1	0	0	0	0	0	0	0	0	1	0	0
-2/	1	**	0	0	1	0	0	0	0	0	0	1	0	0	0
-5/	2	**	0	0	0	1	0	0	0	0	1	0	0	0	0
-3/	1	**	0	0	0	0	1	0	0	1	0	0	0	0	0
-13/	4	**	0	0	0	0	0	1	1	0	0	0	0	0	0
2/	1	**	2	0	0	0	0	0	0	0	0	0	1	0	0
6/	1	**	1	1	0	0	0	0	0	0	0	1	0	0	0
8/	1	**	1	0	1	0	0	0	0	0	1	0	0	0	0
10/	1	**	1	0	0	1	0	0	0	1	0	0	0	0	0
93/	8	**	1	0	0	0	1	0	1	0	0	0	0	0	0
6/	1	**	1	0	0	0	0	2	0	0	0	0	0	0	0
9/	2	**	0	2	0	0	0	0	0	0	1	0	0	0	0
12/	1	**	0	1	1	0	0	0	0	1	0	0	0	0	0
117/	8	**	0	1	0	1	0	0	1	0	0	0	0	0	0
129/	8	**	0	1	0	0	1	1	0	0	0	0	0	0	0
125/	16	**	0	0	2	0	0	0	1	0	0	0	0	0	0
145/	8	**	0	0	1	1	0	1	0	0	0	0	0	0	0
77/	8	**	0	0	1	0	2	0	0	0	0	0	0	0	0
81/	8	**	0	0	0	2	1	0	0	0	0	0	0	0	0
-4/	1	**	3	0	0	0	0	0	0	0	0	1	0	0	0
-18/	1	**	2	1	0	0	0	0	0	0	1	0	0	0	0
-24/	1	**	2	0	1	0	0	0	0	1	0	0	0	0	0
-945/	32	**	2	0	0	1	0	0	1	0	0	0	0	0	0
-1041/	32	**	2	0	0	0	1	1	0	0	0	0	0	0	0
-27/	1	**	1	2	0	0	0	0	0	1	0	0	0	0	0
-1137/	16	**	1	1	1	0	0	0	1	0	0	0	0	0	0
-333/	4	**	1	1	0	1	0	1	0	0	0	0	0	0	0
-705/	16	**	1	1	0	0	2	0	0	0	0	0	0	0	0
-357/	8	**	1	0	2	0	0	1	0	0	0	0	0	0	0
-1605/	16	**	1	0	1	1	1	0	0	0	0	0	0	0	0
-71/	4	**	1	0	0	3	0	0	0	0	0	0	0	0	0

UNCLASSIFIED

-427/	32	**	0	3	0	0	0	0	1	0	0	0	0	0	0
-1623/	32	**	0	2	1	0	0	1	0	0	0	0	0	0	0
-57/	1	**	0	2	0	1	1	0	0	0	0	0	0	0	0
-1971/	32	**	0	1	2	0	1	0	0	0	0	0	0	0	0
-1047/	16	**	0	1	1	2	0	0	0	0	0	0	0	0	0
-755/	32	**	0	0	3	1	0	0	0	0	0	0	0	0	0
8/	1	**	4	0	0	0	0	0	0	0	1	0	0	0	0
48/	1	**	3	1	0	0	0	0	0	1	0	0	0	0	0
4061/	64	**	3	0	1	0	0	0	1	0	0	0	0	0	0
2395/	32	**	3	0	0	1	0	1	0	0	0	0	0	0	0
2525/	64	**	3	0	0	0	2	0	0	0	0	0	0	0	0
13719/	128	**	2	2	0	0	0	0	1	0	0	0	0	0	0
17457/	64	**	2	1	1	0	0	1	0	0	0	0	0	0	0
2457/	8	**	2	1	0	1	1	0	0	0	0	0	0	0	0
21207/	128	**	2	0	2	0	1	0	0	0	0	0	0	0	0
11313/	64	**	2	0	1	2	0	0	0	0	0	0	0	0	0
103/	1	**	1	3	0	0	0	1	0	0	0	0	0	0	0
24153/	64	**	1	2	1	0	1	0	0	0	0	0	0	0	0
201/	1	**	1	2	0	2	0	0	0	0	0	0	0	0	0
13953/	32	**	1	1	2	1	0	0	0	0	0	0	0	0	0
315/	8	**	1	0	4	0	0	0	0	0	0	0	0	0	0
4579/	128	**	0	4	0	0	1	0	0	0	0	0	0	0	0
5303/	32	**	0	3	1	1	0	0	0	0	0	0	0	0	0
11529/	128	**	0	2	3	0	0	0	0	0	0	0	0	0	0
-16/	1	**	5	0	0	0	0	0	0	1	0	0	0	0	0
-61125/	512	**	4	1	0	0	0	0	1	0	0	0	0	0	0
-78315/	512	**	4	0	1	0	0	1	0	0	0	0	0	0	0
-5515/	32	**	4	0	0	1	1	0	0	0	0	0	0	0	0
-44295/	128	**	3	2	0	0	0	1	0	0	0	0	0	0	0
-108415/	128	**	3	1	1	0	1	0	0	0	0	0	0	0	0
-28935/	64	**	3	1	0	2	0	0	0	0	0	0	0	0	0
-15705/	32	**	3	0	2	1	0	0	0	0	0	0	0	0	0
-30855/	64	**	2	3	0	0	1	0	0	0	0	0	0	0	0
-53715/	32	**	2	2	1	1	0	0	0	0	0	0	0	0	0
-155735/	256	**	2	1	3	0	0	0	0	0	0	0	0	0	0
-20435/	64	**	1	4	0	1	0	0	0	0	0	0	0	0	0
-89025/	128	**	1	3	2	0	0	0	0	0	0	0	0	0	0
-20363/	256	**	0	5	1	0	0	0	0	0	0	0	0	0	0
65305/	2048	**	6	0	0	0	0	0	1	0	0	0	0	0	0
71397/	256	**	5	1	0	0	0	1	0	0	0	0	0	0	0
350733/	1024	**	5	0	1	0	1	0	0	0	0	0	0	0	0
46821/	256	**	5	0	0	2	0	0	0	0	0	0	0	0	0
997875/	1024	**	4	2	0	0	1	0	0	0	0	0	0	0	0
1160775/	512	**	4	1	1	1	0	0	0	0	0	0	0	0	0
842725/	2048	**	4	0	3	0	0	0	0	0	0	0	0	0	0
220955/	128	**	3	3	0	1	0	0	0	0	0	0	0	0	0
180585/	64	**	3	2	2	0	0	0	0	0	0	0	0	0	0
1653615/	1024	**	2	4	1	0	0	0	0	0	0	0	0	0	0
1973/	16	**	1	6	0	0	0	0	0	0	0	0	0	0	0
-127739/	2048	**	7	0	0	0	0	1	0	0	0	0	0	0	0
-313887/	512	**	6	1	0	0	1	0	0	0	0	0	0	0	0
-731605/	1024	**	6	0	1	1	0	0	0	0	0	0	0	0	0
-1254435/	512	**	5	2	0	1	0	0	0	0	0	0	0	0	0
-5473881/	2048	**	5	1	2	0	0	0	0	0	0	0	0	0	0
-10448095/	2048	**	4	3	1	0	0	0	0	0	0	0	0	0	0
-1197819/	1024	**	3	5	0	0	0	0	0	0	0	0	0	0	0
3869023/	32768	**	8	0	0	0	1	0	0	0	0	0	0	0	0
2584887/	2048	**	7	1	0	1	0	0	0	0	0	0	0	0	0
2822229/	4096	**	7	0	2	0	0	0	0	0	0	0	0	0	0
45293871/	8192	**	6	2	1	0	0	0	0	0	0	0	0	0	0
12991643/	4096	**	5	4	0	0	0	0	0	0	0	0	0	0	0
-3497531/	16384	**	9	0	0	1	0	0	0	0	0	0	0	0	0
-157869639/	65536	**	8	1	1	0	0	0	0	0	0	0	0	0	0
-30213975/	8192	**	7	3	0	0	0	0	0	0	0	0	0	0	0
95172931/	262144	**	10	0	1	0	0	0	0	0	0	0	0	0	0

68360515/	32768	**	9	2	0	0	0	0	0	0	0	0	0	0	0
-148589415/	262144	**	11	1	0	0	0	0	0	0	0	0	0	0	0
62155679/	1048576	**	13	0	0	0	0	0	0	0	0	0	0	0	0

P= 2

C1212 =

1/	2	**	0	0	0	0	0	0	0	0	0	0	0	1
-1/	1	**	1	0	0	0	0	0	0	0	0	0	1	0
-3/	2	**	0	1	0	0	0	0	0	0	0	1	0	0
-2/	1	**	0	0	1	0	0	0	0	0	1	0	0	0
-5/	2	**	0	0	0	1	0	0	0	1	0	0	0	0
-3/	1	**	0	0	0	0	1	0	1	0	0	0	0	0
-7/	4	**	0	0	0	0	0	2	0	0	0	0	0	0
2/	1	**	2	0	0	0	0	0	0	0	0	1	0	0
6/	1	**	1	1	0	0	0	0	0	0	1	0	0	0
8/	1	**	1	0	1	0	0	0	0	1	0	0	0	0
10/	1	**	1	0	0	1	0	0	1	0	0	0	0	0
12/	1	**	1	0	0	0	1	1	0	0	0	0	0	0
9/	2	**	0	2	0	0	0	0	0	1	0	0	0	0
12/	1	**	0	1	1	0	0	0	1	0	0	0	0	0
15/	1	**	0	1	0	1	0	1	0	0	0	0	0	0
8/	1	**	0	1	0	0	2	0	0	0	0	0	0	0
8/	1	**	0	0	2	0	0	1	0	0	0	0	0	0
18/	1	**	0	0	1	1	1	0	0	0	0	0	0	0
19/	6	**	0	0	0	3	0	0	0	0	0	0	0	0
-4/	1	**	3	0	0	0	0	0	0	0	1	0	0	0
-18/	1	**	2	1	0	0	0	0	0	1	0	0	0	0
-24/	1	**	2	0	1	0	0	0	1	0	0	0	0	0
-30/	1	**	2	0	0	1	0	1	0	0	0	0	0	0
-33/	2	**	2	0	0	0	2	0	0	0	0	0	0	0
-27/	1	**	1	2	0	0	0	0	1	0	0	0	0	0
-72/	1	**	1	1	1	0	0	1	0	0	0	0	0	0
-84/	1	**	1	1	0	1	1	0	0	0	0	0	0	0
-45/	1	**	1	0	2	0	1	0	0	0	0	0	0	0
-48/	1	**	1	0	1	2	0	0	0	0	0	0	0	0
-27/	2	**	0	3	0	0	0	1	0	0	0	0	0	0
-51/	1	**	0	2	1	0	1	0	0	0	0	0	0	0
-111/	4	**	0	2	0	2	0	0	0	0	0	0	0	0
-60/	1	**	0	1	2	1	0	0	0	0	0	0	0	0
-11/	2	**	0	0	4	0	0	0	0	0	0	0	0	0
8/	1	**	4	0	0	0	0	0	0	1	0	0	0	0
48/	1	**	3	1	0	0	0	0	1	0	0	0	0	0
64/	1	**	3	0	1	0	0	1	0	0	0	0	0	0
76/	1	**	3	0	0	1	1	0	0	0	0	0	0	0
108/	1	**	2	2	0	0	0	1	0	0	0	0	0	0
276/	1	**	2	1	1	0	1	0	0	0	0	0	0	0
150/	1	**	2	1	0	2	0	0	0	0	0	0	0	0
162/	1	**	2	0	2	1	0	0	0	0	0	0	0	0
104/	1	**	1	3	0	0	1	0	0	0	0	0	0	0
372/	1	**	1	2	1	1	0	0	0	0	0	0	0	0
136/	1	**	1	1	3	0	0	0	0	0	0	0	0	0
71/	2	**	0	4	0	1	0	0	0	0	0	0	0	0
78/	1	**	0	3	2	0	0	0	0	0	0	0	0	0
-16/	1	**	5	0	0	0	0	0	1	0	0	0	0	0
-120/	1	**	4	1	0	0	0	1	0	0	0	0	0	0

UNCLASSIFIED

-155/	1	**	4	0	1	0	1	0	0	0	0	0	0	0
-85/	1	**	4	0	0	2	0	0	0	0	0	0	0	0
-350/	1	**	3	2	0	0	1	0	0	0	0	0	0	0
-840/	1	**	3	1	1	1	0	0	0	0	0	0	0	0
-460/	3	**	3	0	3	0	0	0	0	0	0	0	0	0
-480/	1	**	2	3	0	1	0	0	0	0	0	0	0	0
-795/	1	**	2	2	2	0	0	0	0	0	0	0	0	0
-305/	1	**	1	4	1	0	0	0	0	0	0	0	0	0
-47/	4	**	0	6	0	0	0	0	0	0	0	0	0	0
32/	1	**	6	0	0	0	0	1	0	0	0	0	0	0
282/	1	**	5	1	0	0	1	0	0	0	0	0	0	0
342/	1	**	5	0	1	1	0	0	0	0	0	0	0	0
975/	1	**	4	2	0	1	0	0	0	0	0	0	0	0
1080/	1	**	4	1	2	0	0	0	0	0	0	0	0	0
1660/	1	**	3	3	1	0	0	0	0	0	0	0	0	0
288/	1	**	2	5	0	0	0	0	0	0	0	0	0	0
-63/	1	**	7	0	0	0	1	0	0	0	0	0	0	0
-616/	1	**	6	1	0	1	0	0	0	0	0	0	0	0
-343/	1	**	6	0	2	0	0	0	0	0	0	0	0	0
-2373/	1	**	5	2	1	0	0	0	0	0	0	0	0	0
-4585/	4	**	4	4	0	0	0	0	0	0	0	0	0	0
119/	1	**	8	0	0	1	0	0	0	0	0	0	0	0
1232/	1	**	7	1	1	0	0	0	0	0	0	0	0	0
5012/	3	**	6	3	0	0	0	0	0	0	0	0	0	0
-210/	1	**	9	0	1	0	0	0	0	0	0	0	0	0
-2205/	2	**	8	2	0	0	0	0	0	0	0	0	0	0
336/	1	**	10	1	0	0	0	0	0	0	0	0	0	0
-77/	2	**	12	0	0	0	0	0	0	0	0	0	0	0

P= 2

C1214 =

1/	2	**	0	0	0	0	0	0	0	0	0	0	0	0	1
-1/	1	**	1	0	0	0	0	0	0	0	0	0	0	1	0
-3/	2	**	0	1	0	0	0	0	0	0	0	0	1	0	0
-2/	1	**	0	0	1	0	0	0	0	0	0	1	0	0	0
-5/	2	**	0	0	0	1	0	0	0	0	1	0	0	0	0
-3/	1	**	0	0	0	0	1	0	0	1	0	0	0	0	0
-7/	2	**	0	0	0	0	0	1	1	0	0	0	0	0	0
2/	1	**	2	0	0	0	0	0	0	0	0	0	1	0	0
6/	1	**	1	1	0	0	0	0	0	0	0	1	0	0	0
8/	1	**	1	0	1	0	0	0	0	0	1	0	0	0	0
10/	1	**	1	0	0	1	0	0	0	1	0	0	0	0	0
12/	1	**	1	0	0	0	1	0	1	0	0	0	0	0	0
13/	2	**	1	0	0	0	0	2	0	0	0	0	0	0	0
9/	2	**	0	2	0	0	0	0	0	0	1	0	0	0	0
12/	1	**	0	1	1	0	0	0	0	1	0	0	0	0	0
15/	1	**	0	1	0	1	0	0	1	0	0	0	0	0	0
17/	1	**	0	1	0	0	1	1	0	0	0	0	0	0	0
8/	1	**	0	0	2	0	0	0	1	0	0	0	0	0	0
19/	1	**	0	0	1	1	0	1	0	0	0	0	0	0	0
10/	1	**	0	0	1	0	2	0	0	0	0	0	0	0	0
21/	2	**	0	0	0	2	1	0	0	0	0	0	0	0	0
-4/	1	**	3	0	0	0	0	0	0	0	0	1	0	0	0
-18/	1	**	2	1	0	0	0	0	0	0	1	0	0	0	0
-24/	1	**	2	0	1	0	0	0	0	1	0	0	0	0	0

-30/	1	**	2	0	0	1	0	0	1	0	0	0	0	0	0
-69/	2	**	2	0	0	0	1	1	0	0	0	0	0	0	0
-27/	1	**	1	2	0	0	0	0	0	1	0	0	0	0	0
-72/	1	**	1	1	1	0	0	0	1	0	0	0	0	0	0
-87/	1	**	1	1	0	1	0	1	0	0	0	0	0	0	0
-93/	2	**	1	1	0	0	2	0	0	0	0	0	0	0	0
-93/	2	**	1	0	2	0	0	1	0	0	0	0	0	0	0
-105/	1	**	1	0	1	1	1	0	0	0	0	0	0	0	0
-37/	2	**	1	0	0	3	0	0	0	0	0	0	0	0	0
-27/	2	**	0	3	0	0	0	0	1	0	0	0	0	0	0
-105/	2	**	0	2	1	0	0	1	0	0	0	0	0	0	0
-60/	1	**	0	2	0	1	1	0	0	0	0	0	0	0	0
-129/	2	**	0	1	2	0	1	0	0	0	0	0	0	0	0
-69/	1	**	0	1	1	2	0	0	0	0	0	0	0	0	0
-25/	1	**	0	0	3	1	0	0	0	0	0	0	0	0	0
8/	1	**	4	0	0	0	0	0	0	0	1	0	0	0	0
48/	1	**	3	1	0	0	0	0	0	1	0	0	0	0	0
64/	1	**	3	0	1	0	0	0	1	0	0	0	0	0	0
78/	1	**	3	0	0	1	0	1	0	0	0	0	0	0	0
42/	1	**	3	0	0	0	2	0	0	0	0	0	0	0	0
108/	1	**	2	2	0	0	0	0	1	0	0	0	0	0	0
282/	1	**	2	1	1	0	0	1	0	0	0	0	0	0	0
324/	1	**	2	1	0	1	1	0	0	0	0	0	0	0	0
174/	1	**	2	0	2	0	1	0	0	0	0	0	0	0	0
186/	1	**	2	0	1	2	0	0	0	0	0	0	0	0	0
106/	1	**	1	3	0	0	0	1	0	0	0	0	0	0	0
396/	1	**	1	2	1	0	1	0	0	0	0	0	0	0	0
213/	1	**	1	2	0	2	0	0	0	0	0	0	0	0	0
462/	1	**	1	1	2	1	0	0	0	0	0	0	0	0	0
42/	1	**	1	0	4	0	0	0	0	0	0	0	0	0	0
75/	2	**	0	4	0	0	1	0	0	0	0	0	0	0	0
176/	1	**	0	3	1	1	0	0	0	0	0	0	0	0	0
96/	1	**	0	2	3	0	0	0	0	0	0	0	0	0	0
-16/	1	**	5	0	0	0	0	0	0	1	0	0	0	0	0
-120/	1	**	4	1	0	0	0	0	1	0	0	0	0	0	0
-315/	2	**	4	0	1	0	0	1	0	0	0	0	0	0	0
-365/	2	**	4	0	0	1	1	0	0	0	0	0	0	0	0
-355/	1	**	3	2	0	0	0	1	0	0	0	0	0	0	0
-890/	1	**	3	1	1	0	1	0	0	0	0	0	0	0	0
-480/	1	**	3	1	0	2	0	0	0	0	0	0	0	0	0
-520/	1	**	3	0	2	1	0	0	0	0	0	0	0	0	0
-505/	1	**	2	3	0	0	1	0	0	0	0	0	0	0	0
-1785/	1	**	2	2	1	1	0	0	0	0	0	0	0	0	0
-650/	1	**	2	1	3	0	0	0	0	0	0	0	0	0	0
-340/	1	**	1	4	0	1	0	0	0	0	0	0	0	0	0
-745/	1	**	1	3	2	0	0	0	0	0	0	0	0	0	0
-171/	2	**	0	5	1	0	0	0	0	0	0	0	0	0	0
32/	1	**	6	0	0	0	0	0	1	0	0	0	0	0	0
285/	1	**	5	1	0	0	0	1	0	0	0	0	0	0	0
360/	1	**	5	0	1	0	1	0	0	0	0	0	0	0	0
195/	1	**	5	0	0	2	0	0	0	0	0	0	0	0	0
1020/	1	**	4	2	0	0	1	0	0	0	0	0	0	0	0
2415/	1	**	4	1	1	1	0	0	0	0	0	0	0	0	0
440/	1	**	4	0	3	0	0	0	0	0	0	0	0	0	0
1840/	1	**	3	3	0	1	0	0	0	0	0	0	0	0	0
3030/	1	**	3	2	2	0	0	0	0	0	0	0	0	0	0
1740/	1	**	2	4	1	0	0	0	0	0	0	0	0	0	0
267/	2	**	1	6	0	0	0	0	0	0	0	0	0	0	0
-127/	2	**	7	0	0	0	0	1	0	0	0	0	0	0	0
-1281/	2	**	6	1	0	0	1	0	0	0	0	0	0	0	0
-763/	1	**	6	0	1	1	0	0	0	0	0	0	0	0	0
-5229/	2	**	5	2	0	1	0	0	0	0	0	0	0	0	0
-2877/	1	**	5	1	2	0	0	0	0	0	0	0	0	0	0
-11025/	2	**	4	3	1	0	0	0	0	0	0	0	0	0	0
-2541/	2	**	3	5	0	0	0	0	0	0	0	0	0	0	0

UNCLASSIFIED

123/	1	**	8	0	0	0	1	0	0	0	0	0	0	0	0
1348/	1	**	7	1	0	1	0	0	0	0	0	0	0	0	0
744/	1	**	7	0	2	0	0	0	0	0	0	0	0	0	0
5992/	1	**	6	2	1	0	0	0	0	0	0	0	0	0	0
3458/	1	**	5	4	0	0	0	0	0	0	0	0	0	0	0
-228/	1	**	9	0	0	1	0	0	0	0	0	0	0	0	0
-2619/	1	**	8	1	1	0	0	0	0	0	0	0	0	0	0
-4038/	1	**	7	3	0	0	0	0	0	0	0	0	0	0	0
396/	1	**	10	0	1	0	0	0	0	0	0	0	0	0	0
2295/	1	**	9	2	0	0	0	0	0	0	0	0	0	0	0
-627/	1	**	11	1	0	0	0	0	0	0	0	0	0	0	0
66/	1	**	13	0	0	0	0	0	0	0	0	0	0	0	0

P= 2

C1216 =

1/	2	**	0	0	0	0	0	0	0	0	0	0	0	0	0	1
-1/	1	**	1	0	0	0	0	0	0	0	0	0	0	0	1	0
-3/	2	**	0	1	0	0	0	0	0	0	0	0	0	1	0	0
-2/	1	**	0	0	1	0	0	0	0	0	0	0	1	0	0	0
-5/	2	**	0	0	0	1	0	0	0	0	0	1	0	0	0	0
-3/	1	**	0	0	0	0	1	0	0	0	1	0	0	0	0	0
-7/	2	**	0	0	0	0	0	1	0	1	0	0	0	0	0	0
-7/	4	**	0	0	0	0	0	0	2	0	0	0	0	0	0	0
2/	1	**	2	0	0	0	0	0	0	0	0	0	0	1	0	0
6/	1	**	1	1	0	0	0	0	0	0	0	0	1	0	0	0
8/	1	**	1	0	1	0	0	0	0	0	0	1	0	0	0	0
10/	1	**	1	0	0	1	0	0	0	0	1	0	0	0	0	0
12/	1	**	1	0	0	0	1	0	0	1	0	0	0	0	0	0
13/	1	**	1	0	0	0	0	1	1	0	0	0	0	0	0	0
9/	2	**	0	2	0	0	0	0	0	0	0	1	0	0	0	0
12/	1	**	0	1	1	0	0	0	0	0	1	0	0	0	0	0
15/	1	**	0	1	0	1	0	0	0	1	0	0	0	0	0	0
17/	1	**	0	1	0	0	1	0	1	0	0	0	0	0	0	0
9/	1	**	0	1	0	0	0	2	0	0	0	0	0	0	0	0
8/	1	**	0	0	2	0	0	0	0	1	0	0	0	0	0	0
19/	1	**	0	0	1	1	0	0	1	0	0	0	0	0	0	0
21/	1	**	0	0	1	0	1	1	0	0	0	0	0	0	0	0
11/	1	**	0	0	0	2	0	1	0	0	0	0	0	0	0	0
23/	2	**	0	0	0	1	2	0	0	0	0	0	0	0	0	0
-4/	1	**	3	0	0	0	0	0	0	0	0	0	1	0	0	0
-18/	1	**	2	1	0	0	0	0	0	0	0	1	0	0	0	0
-24/	1	**	2	0	1	0	0	0	0	0	1	0	0	0	0	0
-30/	1	**	2	0	0	1	0	0	0	1	0	0	0	0	0	0
-69/	2	**	2	0	0	0	1	0	1	0	0	0	0	0	0	0
-18/	1	**	2	0	0	0	0	2	0	0	0	0	0	0	0	0
-27/	1	**	1	2	0	0	0	0	0	0	1	0	0	0	0	0
-72/	1	**	1	1	1	0	0	0	0	1	0	0	0	0	0	0
-87/	1	**	1	1	0	1	0	0	1	0	0	0	0	0	0	0
-96/	1	**	1	1	0	0	1	1	0	0	0	0	0	0	0	0
-93/	2	**	1	0	2	0	0	0	1	0	0	0	0	0	0	0
-108/	1	**	1	0	1	1	0	1	0	0	0	0	0	0	0	0
-57/	1	**	1	0	1	0	2	0	0	0	0	0	0	0	0	0
-60/	1	**	1	0	0	2	1	0	0	0	0	0	0	0	0	0
-27/	2	**	0	3	0	0	0	0	0	1	0	0	0	0	0	0

-105/	2	**	0	2	1	0	0	0	1	0	0	0	0	0	0	0
-123/	2	**	0	2	0	1	0	1	0	0	0	0	0	0	0	0
-129/	4	**	0	2	0	0	2	0	0	0	0	0	0	0	0	0
-66/	1	**	0	1	2	0	0	1	0	0	0	0	0	0	0	0
-147/	1	**	0	1	1	1	1	0	0	0	0	0	0	0	0	0
-26/	1	**	0	1	0	3	0	0	0	0	0	0	0	0	0	0
-53/	2	**	0	0	3	0	1	0	0	0	0	0	0	0	0	0
-42/	1	**	0	0	2	2	0	0	0	0	0	0	0	0	0	0
8/	1	**	4	0	0	0	0	0	0	0	0	1	0	0	0	0
48/	1	**	3	1	0	0	0	0	0	0	1	0	0	0	0	0
64/	1	**	3	0	1	0	0	0	0	1	0	0	0	0	0	0
78/	1	**	3	0	0	1	0	0	1	0	0	0	0	0	0	0
86/	1	**	3	0	0	0	1	1	0	0	0	0	0	0	0	0
108/	1	**	2	2	0	0	0	0	0	1	0	0	0	0	0	0
282/	1	**	2	1	1	0	0	0	1	0	0	0	0	0	0	0
330/	1	**	2	1	0	1	0	1	0	0	0	0	0	0	0	0
174/	1	**	2	1	0	0	2	0	0	0	0	0	0	0	0	0
177/	1	**	2	0	2	0	0	1	0	0	0	0	0	0	0	0
396/	1	**	2	0	1	1	1	0	0	0	0	0	0	0	0	0
70/	1	**	2	0	0	3	0	0	0	0	0	0	0	0	0	0
106/	1	**	1	3	0	0	0	0	1	0	0	0	0	0	0	0
402/	1	**	1	2	1	0	0	1	0	0	0	0	0	0	0	0
450/	1	**	1	2	0	1	1	0	0	0	0	0	0	0	0	0
486/	1	**	1	1	2	0	1	0	0	0	0	0	0	0	0	0
516/	1	**	1	1	1	2	0	0	0	0	0	0	0	0	0	0
186/	1	**	1	0	3	1	0	0	0	0	0	0	0	0	0	0
38/	1	**	0	4	0	0	0	1	0	0	0	0	0	0	0	0
184/	1	**	0	3	1	0	1	0	0	0	0	0	0	0	0	0
98/	1	**	0	3	0	2	0	0	0	0	0	0	0	0	0	0
318/	1	**	0	2	2	1	0	0	0	0	0	0	0	0	0	0
115/	2	**	0	1	4	0	0	0	0	0	0	0	0	0	0	0
-16/	1	**	5	0	0	0	0	0	0	0	1	0	0	0	0	0
-120/	1	**	4	1	0	0	0	0	0	1	0	0	0	0	0	0
-315/	2	**	4	0	1	0	0	0	1	0	0	0	0	0	0	0
-185/	1	**	4	0	0	1	0	1	0	0	0	0	0	0	0	0
-195/	2	**	4	0	0	0	2	0	0	0	0	0	0	0	0	0
-355/	1	**	3	2	0	0	0	0	1	0	0	0	0	0	0	0
-900/	1	**	3	1	1	0	0	1	0	0	0	0	0	0	0	0
-1010/	1	**	3	1	0	1	1	0	0	0	0	0	0	0	0	0
-545/	1	**	3	0	2	0	1	0	0	0	0	0	0	0	0	0
-580/	1	**	3	0	1	2	0	0	0	0	0	0	0	0	0	0
-510/	1	**	2	3	0	0	0	1	0	0	0	0	0	0	0	0
-1860/	1	**	2	2	1	0	1	0	0	0	0	0	0	0	0	0
-990/	1	**	2	2	0	2	0	0	0	0	0	0	0	0	0	0
-2145/	1	**	2	1	2	1	0	0	0	0	0	0	0	0	0	0
-775/	4	**	2	0	4	0	0	0	0	0	0	0	0	0	0	0
-705/	2	**	1	4	0	0	1	0	0	0	0	0	0	0	0	0
-1630/	1	**	1	3	1	1	0	0	0	0	0	0	0	0	0	0
-885/	1	**	1	2	3	0	0	0	0	0	0	0	0	0	0	0
-93/	1	**	0	5	0	1	0	0	0	0	0	0	0	0	0	0
-505/	2	**	0	4	2	0	0	0	0	0	0	0	0	0	0	0
32/	1	**	6	0	0	0	0	0	0	1	0	0	0	0	0	0
285/	1	**	5	1	0	0	0	0	1	0	0	0	0	0	0	0
363/	1	**	5	0	1	0	0	1	0	0	0	0	0	0	0	0
408/	1	**	5	0	0	1	1	0	0	0	0	0	0	0	0	0
2055/	2	**	4	2	0	0	0	1	0	0	0	0	0	0	0	0
2505/	1	**	4	1	1	0	1	0	0	0	0	0	0	0	0	0
1335/	1	**	4	1	0	2	0	0	0	0	0	0	0	0	0	0
2895/	2	**	4	0	2	1	0	0	0	0	0	0	0	0	0	0
1900/	1	**	3	3	0	0	1	0	0	0	0	0	0	0	0	0
6600/	1	**	3	2	1	1	0	0	0	0	0	0	0	0	0	0
2390/	1	**	3	1	3	0	0	0	0	0	0	0	0	0	0	0
3765/	2	**	2	4	0	1	0	0	0	0	0	0	0	0	0	0
4095/	1	**	2	3	2	0	0	0	0	0	0	0	0	0	0	0
936/	1	**	1	5	1	0	0	0	0	0	0	0	0	0	0	0

UNCLASSIFIED

51/	2	**	0	7	0	0	0	0	0	0	0	0	0	0	0
-127/	2	**	7	0	0	0	0	0	1	0	0	0	0	0	0
-644/	1	**	6	1	0	0	0	1	0	0	0	0	0	0	0
-1575/	2	**	6	0	1	0	1	0	0	0	0	0	0	0	0
-420/	1	**	6	0	0	2	0	0	0	0	0	0	0	0	0
-2688/	1	**	5	2	0	0	1	0	0	0	0	0	0	0	0
-6237/	1	**	5	1	1	1	0	0	0	0	0	0	0	0	0
-2261/	2	**	5	0	3	0	0	0	0	0	0	0	0	0	0
-11865/	2	**	4	3	0	1	0	0	0	0	0	0	0	0	0
-38745/	4	**	4	2	2	0	0	0	0	0	0	0	0	0	0
-7385/	1	**	3	4	1	0	0	0	0	0	0	0	0	0	0
-3381/	4	**	2	6	0	0	0	0	0	0	0	0	0	0	0
247/	2	**	8	0	0	0	0	1	0	0	0	0	0	0	0
1380/	1	**	7	1	0	0	1	0	0	0	0	0	0	0	0
1604/	1	**	7	0	1	1	0	0	0	0	0	0	0	0	0
6412/	1	**	6	2	0	1	0	0	0	0	0	0	0	0	0
6986/	1	**	6	1	2	0	0	0	0	0	0	0	0	0	0
15988/	1	**	5	3	1	0	0	0	0	0	0	0	0	0	0
4578/	1	**	4	5	0	0	0	0	0	0	0	0	0	0	0
-465/	2	**	9	0	0	0	1	0	0	0	0	0	0	0	0
-5571/	2	**	8	1	0	1	0	0	0	0	0	0	0	0	0
-6075/	4	**	8	0	2	0	0	0	0	0	0	0	0	0	0
-13914/	1	**	7	2	1	0	0	0	0	0	0	0	0	0	0
-9303/	1	**	6	4	0	0	0	0	0	0	0	0	0	0	0
837/	2	**	10	0	0	1	0	0	0	0	0	0	0	0	0
5235/	1	**	9	1	1	0	0	0	0	0	0	0	0	0	0
18015/	2	**	8	3	0	0	0	0	0	0	0	0	0	0	0
-1419/	2	**	11	0	1	0	0	0	0	0	0	0	0	0	0
-17919/	4	**	10	2	0	0	0	0	0	0	0	0	0	0	0
2211/	2	**	12	1	0	0	0	0	0	0	0	0	0	0	0
-429/	4	**	14	0	0	0	0	0	0	0	0	0	0	0	0

P= 2

C1313 =

1/	2	**	0	0	0	0	0	0	0	0	0	0	0	0	1
-1/	1	**	1	0	0	0	0	0	0	0	0	0	0	1	0
-3/	2	**	0	1	0	0	0	0	0	0	0	0	1	0	0
-2/	1	**	0	0	1	0	0	0	0	0	0	1	0	0	0
-5/	2	**	0	0	0	1	0	0	0	0	1	0	0	0	0
-3/	1	**	0	0	0	0	1	0	0	1	0	0	0	0	0
-7/	2	**	0	0	0	0	0	1	1	0	0	0	0	0	0
2/	1	**	2	0	0	0	0	0	0	0	0	0	1	0	0
6/	1	**	1	1	0	0	0	0	0	0	0	1	0	0	0
8/	1	**	1	0	1	0	0	0	0	0	1	0	0	0	0
10/	1	**	1	0	0	1	0	0	0	1	0	0	0	0	0
12/	1	**	1	0	0	0	1	0	1	0	0	0	0	0	0
53/	8	**	1	0	0	0	0	2	0	0	0	0	0	0	0
9/	2	**	0	2	0	0	0	0	0	0	1	0	0	0	0
12/	1	**	0	1	1	0	0	0	0	1	0	0	0	0	0
15/	1	**	0	1	0	1	0	0	1	0	0	0	0	0	0
69/	4	**	0	1	0	0	1	1	0	0	0	0	0	0	0
8/	1	**	0	0	2	0	0	0	1	0	0	0	0	0	0
77/	4	**	0	0	1	1	0	1	0	0	0	0	0	0	0
81/	8	**	0	0	1	0	2	0	0	0	0	0	0	0	0

85/	8	**	0	0	0	2	1	0	0	0	0	0	0	0	0
-4/	1	**	3	0	0	0	0	0	0	0	0	1	0	0	0
-18/	1	**	2	1	0	0	0	0	0	0	1	0	0	0	0
-24/	1	**	2	0	1	0	0	0	0	1	0	0	0	0	0
-30/	1	**	2	0	0	1	0	0	1	0	0	0	0	0	0
-561/	16	**	2	0	0	0	1	1	0	0	0	0	0	0	0
-27/	1	**	1	2	0	0	0	0	0	1	0	0	0	0	0
-72/	1	**	1	1	1	0	0	0	1	0	0	0	0	0	0
-705/	8	**	1	1	0	1	0	1	0	0	0	0	0	0	0
-189/	4	**	1	1	0	0	2	0	0	0	0	0	0	0	0
-753/	16	**	1	0	2	0	0	1	0	0	0	0	0	0	0
-213/	2	**	1	0	1	1	1	0	0	0	0	0	0	0	0
-75/	4	**	1	0	0	3	0	0	0	0	0	0	0	0	0
-27/	2	**	0	3	0	0	0	0	1	0	0	0	0	0	0
-849/	16	**	0	2	1	0	0	1	0	0	0	0	0	0	0
-975/	16	**	0	2	0	1	1	0	0	0	0	0	0	0	0
-1047/	16	**	0	1	2	0	1	0	0	0	0	0	0	0	0
-561/	8	**	0	1	1	2	0	0	0	0	0	0	0	0	0
-407/	16	**	0	0	3	1	0	0	0	0	0	0	0	0	0
8/	1	**	4	0	0	0	0	0	0	0	1	0	0	0	0
48/	1	**	3	1	0	0	0	0	0	1	0	0	0	0	0
64/	1	**	3	0	1	0	0	0	1	0	0	0	0	0	0
2525/	32	**	3	0	0	1	0	1	0	0	0	0	0	0	0
1371/	32	**	3	0	0	0	2	0	0	0	0	0	0	0	0
108/	1	**	2	2	0	0	0	0	1	0	0	0	0	0	0
9111/	32	**	2	1	1	0	0	1	0	0	0	0	0	0	0
10545/	32	**	2	1	0	1	1	0	0	0	0	0	0	0	0
11313/	64	**	2	0	2	0	1	0	0	0	0	0	0	0	0
189/	1	**	2	0	1	2	0	0	0	0	0	0	0	0	0
3421/	32	**	1	3	0	0	0	1	0	0	0	0	0	0	0
402/	1	**	1	2	1	0	1	0	0	0	0	0	0	0	0
6945/	32	**	1	2	0	2	0	0	0	0	0	0	0	0	0
15057/	32	**	1	1	2	1	0	0	0	0	0	0	0	0	0
5489/	128	**	1	0	4	0	0	0	0	0	0	0	0	0	0
4869/	128	**	0	4	0	0	1	0	0	0	0	0	0	0	0
2871/	16	**	0	3	1	1	0	0	0	0	0	0	0	0	0
6273/	64	**	0	2	3	0	0	0	0	0	0	0	0	0	0
-16/	1	**	5	0	0	0	0	0	0	1	0	0	0	0	0
-120/	1	**	4	1	0	0	0	0	1	0	0	0	0	0	0
-40645/	256	**	4	0	1	0	0	1	0	0	0	0	0	0	0
-47595/	256	**	4	0	0	1	1	0	0	0	0	0	0	0	0
-45765/	128	**	3	2	0	0	0	1	0	0	0	0	0	0	0
-28935/	32	**	3	1	1	0	1	0	0	0	0	0	0	0	0
-31325/	64	**	3	1	0	2	0	0	0	0	0	0	0	0	0
-67805/	128	**	3	0	2	1	0	0	0	0	0	0	0	0	0
-65585/	128	**	2	3	0	0	1	0	0	0	0	0	0	0	0
-116535/	64	**	2	2	1	1	0	0	0	0	0	0	0	0	0
-85015/	128	**	2	1	3	0	0	0	0	0	0	0	0	0	0
-11105/	32	**	1	4	0	1	0	0	0	0	0	0	0	0	0
-97525/	128	**	1	3	2	0	0	0	0	0	0	0	0	0	0
-11205/	128	**	0	5	1	0	0	0	0	0	0	0	0	0	0
32/	1	**	6	0	0	0	0	0	1	0	0	0	0	0	0
146763/	512	**	5	1	0	0	0	1	0	0	0	0	0	0	0
46821/	128	**	5	0	1	0	1	0	0	0	0	0	0	0	0
101985/	512	**	5	0	0	2	0	0	0	0	0	0	0	0	0
1059615/	1024	**	4	2	0	0	1	0	0	0	0	0	0	0	0
631125/	256	**	4	1	1	1	0	0	0	0	0	0	0	0	0
460485/	1024	**	4	0	3	0	0	0	0	0	0	0	0	0	0
240465/	128	**	3	3	0	1	0	0	0	0	0	0	0	0	0
1588065/	512	**	3	2	2	0	0	0	0	0	0	0	0	0	0
456495/	256	**	2	4	1	0	0	0	0	0	0	0	0	0	0
70165/	512	**	1	6	0	0	0	0	0	0	0	0	0	0	0
-130643/	2048	**	7	0	0	0	0	1	0	0	0	0	0	0	0
-1329825/	2048	**	6	1	0	0	1	0	0	0	0	0	0	0	0
-798413/	1024	**	6	0	1	1	0	0	0	0	0	0	0	0	0

UNCLASSIFIED

-1367289/	512	**	5	2	0	1	0	0	0	0	0	0	0	0	0
-6036555/	2048	**	5	1	2	0	0	0	0	0	0	0	0	0	0
-5790715/	1024	**	4	3	1	0	0	0	0	0	0	0	0	0	0
-1336965/	1024	**	3	5	0	0	0	0	0	0	0	0	0	0	0
4081477/	32768	**	8	0	0	0	1	0	0	0	0	0	0	0	0
2820579/	2048	**	7	1	0	1	0	0	0	0	0	0	0	0	0
6251471/	8192	**	7	0	2	0	0	0	0	0	0	0	0	0	0
1575189/	256	**	6	2	1	0	0	0	0	0	0	0	0	0	0
29148931/	8192	**	5	4	0	0	0	0	0	0	0	0	0	0	0
-954053/	4096	**	9	0	0	1	0	0	0	0	0	0	0	0	0
-88222077/	32768	**	8	1	1	0	0	0	0	0	0	0	0	0	0
-34086507/	8192	**	7	3	0	0	0	0	0	0	0	0	0	0	0
26706877/	65536	**	10	0	1	0	0	0	0	0	0	0	0	0	0
310469595/	131072	**	9	2	0	0	0	0	0	0	0	0	0	0	0
-169956101/	262144	**	11	1	0	0	0	0	0	0	0	0	0	0	0
1864677993/	27262976	**	13	0	0	0	0	0	0	0	0	0	0	0	0

P= 2

C1315 =

1/	2	**	0	0	0	0	0	0	0	0	0	0	0	0	0	1
-1/	1	**	1	0	0	0	0	0	0	0	0	0	0	0	1	0
-3/	2	**	0	1	0	0	0	0	0	0	0	0	0	1	0	0
-2/	1	**	0	0	1	0	0	0	0	0	0	0	1	0	0	0
-5/	2	**	0	0	0	1	0	0	0	0	0	1	0	0	0	0
-3/	1	**	0	0	0	0	1	0	0	0	1	0	0	0	0	0
-7/	2	**	0	0	0	0	0	1	0	1	0	0	0	0	0	0
-15/	8	**	0	0	0	0	0	0	2	0	0	0	0	0	0	0
2/	1	**	2	0	0	0	0	0	0	0	0	0	0	1	0	0
6/	1	**	1	1	0	0	0	0	0	0	0	0	1	0	0	0
8/	1	**	1	0	1	0	0	0	0	0	0	1	0	0	0	0
10/	1	**	1	0	0	1	0	0	0	0	1	0	0	0	0	0
12/	1	**	1	0	0	0	1	0	0	1	0	0	0	0	0	0
109/	8	**	1	0	0	0	0	1	1	0	0	0	0	0	0	0
9/	2	**	0	2	0	0	0	0	0	0	0	1	0	0	0	0
12/	1	**	0	1	1	0	0	0	0	0	1	0	0	0	0	0
15/	1	**	0	1	0	1	0	0	0	1	0	0	0	0	0	0
141/	8	**	0	1	0	0	1	0	1	0	0	0	0	0	0	0
75/	8	**	0	1	0	0	0	2	0	0	0	0	0	0	0	0
8/	1	**	0	0	2	0	0	0	0	1	0	0	0	0	0	0
157/	8	**	0	0	1	1	0	0	1	0	0	0	0	0	0	0
87/	4	**	0	0	1	0	1	1	0	0	0	0	0	0	0	0
91/	8	**	0	0	0	2	0	1	0	0	0	0	0	0	0	0
95/	8	**	0	0	0	1	2	0	0	0	0	0	0	0	0	0
-4/	1	**	3	0	0	0	0	0	0	0	0	0	1	0	0	0
-18/	1	**	2	1	0	0	0	0	0	0	0	1	0	0	0	0
-24/	1	**	2	0	1	0	0	0	0	0	1	0	0	0	0	0
-30/	1	**	2	0	0	1	0	0	0	1	0	0	0	0	0	0
-1137/	32	**	2	0	0	0	1	0	1	0	0	0	0	0	0	0
-609/	32	**	2	0	0	0	0	2	0	0	0	0	0	0	0	0
-27/	1	**	1	2	0	0	0	0	0	0	1	0	0	0	0	0
-72/	1	**	1	1	1	0	0	0	0	1	0	0	0	0	0	0
-1425/	16	**	1	1	0	1	0	0	1	0	0	0	0	0	0	0
-1605/	16	**	1	1	0	0	1	1	0	0	0	0	0	0	0	0
-1521/	32	**	1	0	2	0	0	0	1	0	0	0	0	0	0	0

-1797/	16	**	1	0	1	1	0	1	0	0	0	0	0	0	0	0
-237/	4	**	1	0	1	0	2	0	0	0	0	0	0	0	0	0
-249/	4	**	1	0	0	2	1	0	0	0	0	0	0	0	0	0
-27/	2	**	0	3	0	0	0	0	0	1	0	0	0	0	0	0
-1713/	32	**	0	2	1	0	0	0	1	0	0	0	0	0	0	0
-255/	4	**	0	2	0	1	0	1	0	0	0	0	0	0	0	0
-1083/	32	**	0	2	0	0	2	0	0	0	0	0	0	0	0	0
-273/	4	**	0	1	2	0	0	1	0	0	0	0	0	0	0	0
-2457/	16	**	0	1	1	1	1	0	0	0	0	0	0	0	0	0
-217/	8	**	0	1	0	3	0	0	0	0	0	0	0	0	0	0
-221/	8	**	0	0	3	0	1	0	0	0	0	0	0	0	0	0
-1413/	32	**	0	0	2	2	0	0	0	0	0	0	0	0	0	0
8/	1	**	4	0	0	0	0	0	0	0	0	1	0	0	0	0
48/	1	**	3	1	0	0	0	0	0	0	1	0	0	0	0	0
64/	1	**	3	0	1	0	0	0	0	1	0	0	0	0	0	0
5085/	64	**	3	0	0	1	0	0	1	0	0	0	0	0	0	0
5779/	64	**	3	0	0	0	1	1	0	0	0	0	0	0	0	0
108/	1	**	2	2	0	0	0	0	0	1	0	0	0	0	0	0
18327/	64	**	2	1	1	0	0	0	1	0	0	0	0	0	0	0
2745/	8	**	2	1	0	1	0	1	0	0	0	0	0	0	0	0
11697/	64	**	2	1	0	0	2	0	0	0	0	0	0	0	0	0
2937/	16	**	2	0	2	0	0	1	0	0	0	0	0	0	0	0
26481/	64	**	2	0	1	1	1	0	0	0	0	0	0	0	0	0
73/	1	**	2	0	0	3	0	0	0	0	0	0	0	0	0	0
6877/	64	**	1	3	0	0	0	0	1	0	0	0	0	0	0	0
26583/	64	**	1	2	1	0	0	1	0	0	0	0	0	0	0	0
15105/	32	**	1	2	0	1	1	0	0	0	0	0	0	0	0	0
32529/	64	**	1	1	2	0	1	0	0	0	0	0	0	0	0	0
17361/	32	**	1	1	1	2	0	0	0	0	0	0	0	0	0	0
12561/	64	**	1	0	3	1	0	0	0	0	0	0	0	0	0	0
5009/	128	**	0	4	0	0	0	1	0	0	0	0	0	0	0	0
12339/	64	**	0	3	1	0	1	0	0	0	0	0	0	0	0	0
3303/	32	**	0	3	0	2	0	0	0	0	0	0	0	0	0	0
10743/	32	**	0	2	2	1	0	0	0	0	0	0	0	0	0	0
7789/	128	**	0	1	4	0	0	0	0	0	0	0	0	0	0	0
-16/	1	**	5	0	0	0	0	0	0	0	1	0	0	0	0	0
-120/	1	**	4	1	0	0	0	0	0	1	0	0	0	0	0	0
-81605/	512	**	4	0	1	0	0	0	1	0	0	0	0	0	0	0
-6155/	32	**	4	0	0	1	0	1	0	0	0	0	0	0	0	0
-52715/	512	**	4	0	0	0	2	0	0	0	0	0	0	0	0	0
-91845/	256	**	3	2	0	0	0	0	1	0	0	0	0	0	0	0
-118995/	128	**	3	1	1	0	0	1	0	0	0	0	0	0	0	0
-16985/	16	**	3	1	0	1	1	0	0	0	0	0	0	0	0	0
-146155/	256	**	3	0	2	0	1	0	0	0	0	0	0	0	0	0
-78045/	128	**	3	0	1	2	0	0	0	0	0	0	0	0	0	0
-67195/	128	**	2	3	0	0	0	1	0	0	0	0	0	0	0	0
-498945/	256	**	2	2	1	0	1	0	0	0	0	0	0	0	0	0
-133815/	128	**	2	2	0	2	0	0	0	0	0	0	0	0	0	0
-145095/	64	**	2	1	2	1	0	0	0	0	0	0	0	0	0	0
-105335/	512	**	2	0	4	0	0	0	0	0	0	0	0	0	0	0
-47255/	128	**	1	4	0	0	1	0	0	0	0	0	0	0	0	0
-6905/	4	**	1	3	1	1	0	0	0	0	0	0	0	0	0	0
-240795/	256	**	1	2	3	0	0	0	0	0	0	0	0	0	0	0
-12619/	128	**	0	5	0	1	0	0	0	0	0	0	0	0	0	0
-137795/	512	**	0	4	2	0	0	0	0	0	0	0	0	0	0	0
32/	1	**	6	0	0	0	0	0	0	1	0	0	0	0	0	0
294219/	1024	**	5	1	0	0	0	0	1	0	0	0	0	0	0	0
383199/	1024	**	5	0	1	0	0	1	0	0	0	0	0	0	0	0
220203/	512	**	5	0	0	1	1	0	0	0	0	0	0	0	0	0
1081035/	1024	**	4	2	0	0	0	1	0	0	0	0	0	0	0	0
2690505/	1024	**	4	1	1	0	1	0	0	0	0	0	0	0	0	0
723285/	512	**	4	1	0	2	0	0	0	0	0	0	0	0	0	0
783885/	512	**	4	0	2	1	0	0	0	0	0	0	0	0	0	0
15915/	8	**	3	3	0	0	1	0	0	0	0	0	0	0	0	0
1792065/	256	**	3	2	1	1	0	0	0	0	0	0	0	0	0	0

UNCLASSIFIED

1303315/	512	**	3	1	3	0	0	0	0	0	0	0	0	0	0	0
255915/	128	**	2	4	0	1	0	0	0	0	0	0	0	0	0	0
2238915/	512	**	2	3	2	0	0	0	0	0	0	0	0	0	0	0
513351/	512	**	1	5	1	0	0	0	0	0	0	0	0	0	0	0
14033/	512	**	0	7	0	0	0	0	0	0	0	0	0	0	0	0
-261715/	4096	**	7	0	0	0	0	0	1	0	0	0	0	0	0	0
-1351539/	2048	**	6	1	0	0	0	1	0	0	0	0	0	0	0	0
-3385403/	4096	**	6	0	1	0	1	0	0	0	0	0	0	0	0	0
-913101/	2048	**	6	0	0	2	0	0	0	0	0	0	0	0	0	0
-2880927/	1024	**	5	2	0	0	1	0	0	0	0	0	0	0	0	0
-3392697/	512	**	5	1	1	1	0	0	0	0	0	0	0	0	0	0
-4938955/	4096	**	5	0	3	0	0	0	0	0	0	0	0	0	0	0
-6460685/	1024	**	4	3	0	1	0	0	0	0	0	0	0	0	0	0
-42463365/	4096	**	4	2	2	0	0	0	0	0	0	0	0	0	0	0
-16239685/	2048	**	3	4	1	0	0	0	0	0	0	0	0	0	0	0
-1866389/	2048	**	2	6	0	0	0	0	0	0	0	0	0	0	0	0
4134673/	32768	**	8	0	0	0	0	1	0	0	0	0	0	0	0	0
1477527/	1024	**	7	1	0	0	1	0	0	0	0	0	0	0	0	0
6995105/	4096	**	7	0	1	1	0	0	0	0	0	0	0	0	0	0
13983795/	2048	**	6	2	0	1	0	0	0	0	0	0	0	0	0	0
61394151/	8192	**	6	1	2	0	0	0	0	0	0	0	0	0	0	0
70499695/	4096	**	5	3	1	0	0	0	0	0	0	0	0	0	0	0
40559169/	8192	**	4	5	0	0	0	0	0	0	0	0	0	0	0	0
-7951171/	32768	**	9	0	0	0	1	0	0	0	0	0	0	0	0	0
-97304931/	32768	**	8	1	0	1	0	0	0	0	0	0	0	0	0	0
-214140123/	131072	**	8	0	2	0	0	0	0	0	0	0	0	0	0	0
-246098961/	16384	**	7	2	1	0	0	0	0	0	0	0	0	0	0	0
-330809157/	32768	**	6	4	0	0	0	0	0	0	0	0	0	0	0	0
3657053/	8192	**	10	0	0	1	0	0	0	0	0	0	0	0	0	0
742949595/	131072	**	9	1	1	0	0	0	0	0	0	0	0	0	0	0
1286055195/	131072	**	8	3	0	0	0	0	0	0	0	0	0	0	0	0
-404012953/	524288	**	11	0	1	0	0	0	0	0	0	0	0	0	0	0
-2569278503/	524288	**	10	2	0	0	0	0	0	0	0	0	0	0	0	0
2548413331/	2097152	**	12	1	0	0	0	0	0	0	0	0	0	0	0	0
-994507199/	8388608	**	14	0	0	0	0	0	0	0	0	0	0	0	0	0

P= 2

C1414 =

1/	2	**	0	0	0	0	0	0	0	0	0	0	0	0	0	1
-1/	1	**	1	0	0	0	0	0	0	0	0	0	0	0	1	0
-3/	2	**	0	1	0	0	0	0	0	0	0	0	0	1	0	0
-2/	1	**	0	0	1	0	0	0	0	0	0	0	1	0	0	0
-5/	2	**	0	0	0	1	0	0	0	0	0	1	0	0	0	0
-3/	1	**	0	0	0	0	1	0	0	0	1	0	0	0	0	0
-7/	2	**	0	0	0	0	0	1	0	1	0	0	0	0	0	0
-2/	1	**	0	0	0	0	0	0	2	0	0	0	0	0	0	0
2/	1	**	2	0	0	0	0	0	0	0	0	0	0	1	0	0
6/	1	**	1	1	0	0	0	0	0	0	0	0	1	0	0	0
8/	1	**	1	0	1	0	0	0	0	0	0	1	0	0	0	0
10/	1	**	1	0	0	1	0	0	0	0	1	0	0	0	0	0
12/	1	**	1	0	0	0	1	0	0	1	0	0	0	0	0	0

14/	1	**	1	0	0	0	0	1	1	0	0	0	0	0	0	0
9/	2	**	0	2	0	0	0	0	0	0	0	1	0	0	0	0
12/	1	**	0	1	1	0	0	0	0	0	1	0	0	0	0	0
15/	1	**	0	1	0	1	0	0	0	1	0	0	0	0	0	0
18/	1	**	0	1	0	0	1	0	1	0	0	0	0	0	0	0
19/	2	**	0	1	0	0	0	2	0	0	0	0	0	0	0	0
8/	1	**	0	0	2	0	0	0	0	1	0	0	0	0	0	0
20/	1	**	0	0	1	1	0	0	1	0	0	0	0	0	0	0
22/	1	**	0	0	1	0	1	1	0	0	0	0	0	0	0	0
23/	2	**	0	0	0	2	0	1	0	0	0	0	0	0	0	0
12/	1	**	0	0	0	1	2	0	0	0	0	0	0	0	0	0
-4/	1	**	3	0	0	0	0	0	0	0	0	0	1	0	0	0
-18/	1	**	2	1	0	0	0	0	0	0	0	1	0	0	0	0
-24/	1	**	2	0	1	0	0	0	0	0	1	0	0	0	0	0
-30/	1	**	2	0	0	1	0	0	0	1	0	0	0	0	0	0
-36/	1	**	2	0	0	0	1	0	1	0	0	0	0	0	0	0
-39/	2	**	2	0	0	0	0	2	0	0	0	0	0	0	0	0
-27/	1	**	1	2	0	0	0	0	0	0	1	0	0	0	0	0
-72/	1	**	1	1	1	0	0	0	0	1	0	0	0	0	0	0
-90/	1	**	1	1	0	1	0	0	1	0	0	0	0	0	0	0
-102/	1	**	1	1	0	0	1	1	0	0	0	0	0	0	0	0
-48/	1	**	1	0	2	0	0	0	1	0	0	0	0	0	0	0
-114/	1	**	1	0	1	1	0	1	0	0	0	0	0	0	0	0
-60/	1	**	1	0	1	0	2	0	0	0	0	0	0	0	0	0
-63/	1	**	1	0	0	2	1	0	0	0	0	0	0	0	0	0
-27/	2	**	0	3	0	0	0	0	0	1	0	0	0	0	0	0
-54/	1	**	0	2	1	0	0	0	1	0	0	0	0	0	0	0
-129/	2	**	0	2	0	1	0	1	0	0	0	0	0	0	0	0
-69/	2	**	0	2	0	0	2	0	0	0	0	0	0	0	0	0
-69/	1	**	0	1	2	0	0	1	0	0	0	0	0	0	0	0
-156/	1	**	0	1	1	1	1	0	0	0	0	0	0	0	0	0
-55/	2	**	0	1	0	3	0	0	0	0	0	0	0	0	0	0
-28/	1	**	0	0	3	0	1	0	0	0	0	0	0	0	0	0
-45/	1	**	0	0	2	2	0	0	0	0	0	0	0	0	0	0
8/	1	**	4	0	0	0	0	0	0	0	0	1	0	0	0	0
48/	1	**	3	1	0	0	0	0	0	0	1	0	0	0	0	0
64/	1	**	3	0	1	0	0	0	0	1	0	0	0	0	0	0
80/	1	**	3	0	0	1	0	0	1	0	0	0	0	0	0	0
92/	1	**	3	0	0	0	1	1	0	0	0	0	0	0	0	0
108/	1	**	2	2	0	0	0	0	0	1	0	0	0	0	0	0
288/	1	**	2	1	1	0	0	0	1	0	0	0	0	0	0	0
348/	1	**	2	1	0	1	0	1	0	0	0	0	0	0	0	0
186/	1	**	2	1	0	0	2	0	0	0	0	0	0	0	0	0
186/	1	**	2	0	2	0	0	1	0	0	0	0	0	0	0	0
420/	1	**	2	0	1	1	1	0	0	0	0	0	0	0	0	0
74/	1	**	2	0	0	3	0	0	0	0	0	0	0	0	0	0
108/	1	**	1	3	0	0	0	0	1	0	0	0	0	0	0	0
420/	1	**	1	2	1	0	0	1	0	0	0	0	0	0	0	0
480/	1	**	1	2	0	1	1	0	0	0	0	0	0	0	0	0
516/	1	**	1	1	2	0	1	0	0	0	0	0	0	0	0	0
552/	1	**	1	1	1	2	0	0	0	0	0	0	0	0	0	0
200/	1	**	1	0	3	1	0	0	0	0	0	0	0	0	0	0
79/	2	**	0	4	0	0	0	1	0	0	0	0	0	0	0	0
196/	1	**	0	3	1	0	1	0	0	0	0	0	0	0	0	0
105/	1	**	0	3	0	2	0	0	0	0	0	0	0	0	0	0
342/	1	**	0	2	2	1	0	0	0	0	0	0	0	0	0	0
62/	1	**	0	1	4	0	0	0	0	0	0	0	0	0	0	0
-16/	1	**	5	0	0	0	0	0	0	0	1	0	0	0	0	0
-120/	1	**	4	1	0	0	0	0	0	1	0	0	0	0	0	0
-160/	1	**	4	0	1	0	0	0	1	0	0	0	0	0	0	0
-195/	1	**	4	0	0	1	0	1	0	0	0	0	0	0	0	0
-105/	1	**	4	0	0	0	2	0	0	0	0	0	0	0	0	0
-360/	1	**	3	2	0	0	0	0	1	0	0	0	0	0	0	0
-940/	1	**	3	1	1	0	0	1	0	0	0	0	0	0	0	0
-1080/	1	**	3	1	0	1	1	0	0	0	0	0	0	0	0	0

UNCLASSIFIED

-580/	1	**	3	0	2	0	1	0	0	0	0	0	0	0	0	0
-620/	1	**	3	0	1	2	0	0	0	0	0	0	0	0	0	0
-530/	1	**	2	3	0	0	0	1	0	0	0	0	0	0	0	0
-1980/	1	**	2	2	1	0	1	0	0	0	0	0	0	0	0	0
-1065/	1	**	2	2	0	2	0	0	0	0	0	0	0	0	0	0
-2310/	1	**	2	1	2	1	0	0	0	0	0	0	0	0	0	0
-210/	1	**	2	0	4	0	0	0	0	0	0	0	0	0	0	0
-375/	1	**	1	4	0	0	1	0	0	0	0	0	0	0	0	0
-1760/	1	**	1	3	1	1	0	0	0	0	0	0	0	0	0	0
-960/	1	**	1	2	3	0	0	0	0	0	0	0	0	0	0	0
-201/	2	**	0	5	0	1	0	0	0	0	0	0	0	0	0	0
-275/	1	**	0	4	2	0	0	0	0	0	0	0	0	0	0	0
32/	1	**	6	0	0	0	0	0	0	1	0	0	0	0	0	0
288/	1	**	5	1	0	0	0	0	1	0	0	0	0	0	0	0
378/	1	**	5	0	1	0	0	1	0	0	0	0	0	0	0	0
438/	1	**	5	0	0	1	1	0	0	0	0	0	0	0	0	0
1065/	1	**	4	2	0	0	0	1	0	0	0	0	0	0	0	0
2670/	1	**	4	1	1	0	1	0	0	0	0	0	0	0	0	0
1440/	1	**	4	1	0	2	0	0	0	0	0	0	0	0	0	0
1560/	1	**	4	0	2	1	0	0	0	0	0	0	0	0	0	0
2020/	1	**	3	3	0	0	1	0	0	0	0	0	0	0	0	0
7140/	1	**	3	2	1	1	0	0	0	0	0	0	0	0	0	0
2600/	1	**	3	1	3	0	0	0	0	0	0	0	0	0	0	0
2040/	1	**	2	4	0	1	0	0	0	0	0	0	0	0	0	0
4470/	1	**	2	3	2	0	0	0	0	0	0	0	0	0	0	0
1026/	1	**	1	5	1	0	0	0	0	0	0	0	0	0	0	0
393/	14	**	0	7	0	0	0	0	0	0	0	0	0	0	0	0
-64/	1	**	7	0	0	0	0	0	1	0	0	0	0	0	0	0
-665/	1	**	6	1	0	0	0	1	0	0	0	0	0	0	0	0
-840/	1	**	6	0	1	0	1	0	0	0	0	0	0	0	0	0
-455/	1	**	6	0	0	2	0	0	0	0	0	0	0	0	0	0
-2856/	1	**	5	2	0	0	1	0	0	0	0	0	0	0	0	0
-6762/	1	**	5	1	1	1	0	0	0	0	0	0	0	0	0	0
-1232/	1	**	5	0	3	0	0	0	0	0	0	0	0	0	0	0
-6440/	1	**	4	3	0	1	0	0	0	0	0	0	0	0	0	0
-10605/	1	**	4	2	2	0	0	0	0	0	0	0	0	0	0	0
-8120/	1	**	3	4	1	0	0	0	0	0	0	0	0	0	0	0
-1869/	2	**	2	6	0	0	0	0	0	0	0	0	0	0	0	0
127/	1	**	8	0	0	0	0	1	0	0	0	0	0	0	0	0
1464/	1	**	7	1	0	0	1	0	0	0	0	0	0	0	0	0
1744/	1	**	7	0	1	1	0	0	0	0	0	0	0	0	0	0
6972/	1	**	6	2	0	1	0	0	0	0	0	0	0	0	0	0
7672/	1	**	6	1	2	0	0	0	0	0	0	0	0	0	0	0
17640/	1	**	5	3	1	0	0	0	0	0	0	0	0	0	0	0
5082/	1	**	4	5	0	0	0	0	0	0	0	0	0	0	0	0
-246/	1	**	9	0	0	0	1	0	0	0	0	0	0	0	0	0
-3033/	1	**	8	1	0	1	0	0	0	0	0	0	0	0	0	0
-1674/	1	**	8	0	2	0	0	0	0	0	0	0	0	0	0	0
-15408/	1	**	7	2	1	0	0	0	0	0	0	0	0	0	0	0
-10374/	1	**	6	4	0	0	0	0	0	0	0	0	0	0	0	0
456/	1	**	10	0	0	1	0	0	0	0	0	0	0	0	0	0
5820/	1	**	9	1	1	0	0	0	0	0	0	0	0	0	0	0
10095/	1	**	8	3	0	0	0	0	0	0	0	0	0	0	0	0
-792/	1	**	11	0	1	0	0	0	0	0	0	0	0	0	0	0
-5049/	1	**	10	2	0	0	0	0	0	0	0	0	0	0	0	0
1254/	1	**	12	1	0	0	0	0	0	0	0	0	0	0	0	0
-858/	7	**	14	0	0	0	0	0	0	0	0	0	0	0	0	0

P= 2

C1416 =

1/	2	**	0	0	0	0	0	0	0	0	0	0	0	0	0	0	1
-1/	1	**	1	0	0	0	0	0	0	0	0	0	0	0	0	1	0
-3/	2	**	0	1	0	0	0	0	0	0	0	0	0	0	1	0	0
-2/	1	**	0	0	1	0	0	0	0	0	0	0	0	1	0	0	0
-5/	2	**	0	0	0	1	0	0	0	0	0	0	1	0	0	0	0
-3/	1	**	0	0	0	0	1	0	0	0	0	1	0	0	0	0	0
-7/	2	**	0	0	0	0	0	1	0	0	1	0	0	0	0	0	0
-4/	1	**	0	0	0	0	0	0	1	1	0	0	0	0	0	0	0
2/	1	**	2	0	0	0	0	0	0	0	0	0	0	0	1	0	0
6/	1	**	1	1	0	0	0	0	0	0	0	0	0	1	0	0	0
8/	1	**	1	0	1	0	0	0	0	0	0	0	1	0	0	0	0
10/	1	**	1	0	0	1	0	0	0	0	0	1	0	0	0	0	0
12/	1	**	1	0	0	0	1	0	0	0	1	0	0	0	0	0	0
14/	1	**	1	0	0	0	0	1	0	1	0	0	0	0	0	0	0
15/	2	**	1	0	0	0	0	0	2	0	0	0	0	0	0	0	0
9/	2	**	0	2	0	0	0	0	0	0	0	0	1	0	0	0	0
12/	1	**	0	1	1	0	0	0	0	0	0	1	0	0	0	0	0
15/	1	**	0	1	0	1	0	0	0	0	1	0	0	0	0	0	0
18/	1	**	0	1	0	0	1	0	0	1	0	0	0	0	0	0	0
20/	1	**	0	1	0	0	0	1	1	0	0	0	0	0	0	0	0
8/	1	**	0	0	2	0	0	0	0	0	1	0	0	0	0	0	0
20/	1	**	0	0	1	1	0	0	0	1	0	0	0	0	0	0	0
23/	1	**	0	0	1	0	1	0	1	0	0	0	0	0	0	0	0
12/	1	**	0	0	1	0	0	2	0	0	0	0	0	0	0	0	0
12/	1	**	0	0	0	2	0	0	1	0	0	0	0	0	0	0	0
26/	1	**	0	0	0	1	1	1	0	0	0	0	0	0	0	0	0
9/	2	**	0	0	0	0	3	0	0	0	0	0	0	0	0	0	0
-4/	1	**	3	0	0	0	0	0	0	0	0	0	0	1	0	0	0
-18/	1	**	2	1	0	0	0	0	0	0	0	0	1	0	0	0	0
-24/	1	**	2	0	1	0	0	0	0	0	0	1	0	0	0	0	0
-30/	1	**	2	0	0	1	0	0	0	0	1	0	0	0	0	0	0
-36/	1	**	2	0	0	0	1	0	0	1	0	0	0	0	0	0	0
-81/	2	**	2	0	0	0	0	1	1	0	0	0	0	0	0	0	0
-27/	1	**	1	2	0	0	0	0	0	0	0	1	0	0	0	0	0
-72/	1	**	1	1	1	0	0	0	0	0	1	0	0	0	0	0	0
-90/	1	**	1	1	0	1	0	0	0	1	0	0	0	0	0	0	0
-105/	1	**	1	1	0	0	1	0	1	0	0	0	0	0	0	0	0
-111/	2	**	1	1	0	0	0	2	0	0	0	0	0	0	0	0	0
-48/	1	**	1	0	2	0	0	0	0	1	0	0	0	0	0	0	0
-117/	1	**	1	0	1	1	0	0	1	0	0	0	0	0	0	0	0
-129/	1	**	1	0	1	0	1	1	0	0	0	0	0	0	0	0	0
-135/	2	**	1	0	0	2	0	1	0	0	0	0	0	0	0	0	0
-141/	2	**	1	0	0	1	2	0	0	0	0	0	0	0	0	0	0
-27/	2	**	0	3	0	0	0	0	0	0	1	0	0	0	0	0	0
-54/	1	**	0	2	1	0	0	0	0	1	0	0	0	0	0	0	0
-66/	1	**	0	2	0	1	0	0	1	0	0	0	0	0	0	0	0
-147/	2	**	0	2	0	0	1	1	0	0	0	0	0	0	0	0	0
-141/	2	**	0	1	2	0	0	0	1	0	0	0	0	0	0	0	0
-165/	1	**	0	1	1	1	0	1	0	0	0	0	0	0	0	0	0
-87/	1	**	0	1	1	0	2	0	0	0	0	0	0	0	0	0	0
-183/	2	**	0	1	0	2	1	0	0	0	0	0	0	0	0	0	0
-59/	2	**	0	0	3	0	0	1	0	0	0	0	0	0	0	0	0
-99/	1	**	0	0	2	1	1	0	0	0	0	0	0	0	0	0	0
-35/	1	**	0	0	1	3	0	0	0	0	0	0	0	0	0	0	0
8/	1	**	4	0	0	0	0	0	0	0	0	0	1	0	0	0	0
48/	1	**	3	1	0	0	0	0	0	0	0	1	0	0	0	0	0
64/	1	**	3	0	1	0	0	0	0	0	1	0	0	0	0	0	0
80/	1	**	3	0	0	1	0	0	0	1	0	0	0	0	0	0	0
94/	1	**	3	0	0	0	1	0	1	0	0	0	0	0	0	0	0

UNCLASSIFIED

50/	1	**	3	0	0	0	0	2	0	0	0	0	0	0	0	0	0
108/	1	**	2	2	0	0	0	0	0	0	1	0	0	0	0	0	0
288/	1	**	2	1	1	0	0	0	0	1	0	0	0	0	0	0	0
354/	1	**	2	1	0	1	0	0	1	0	0	0	0	0	0	0	0
396/	1	**	2	1	0	0	1	1	0	0	0	0	0	0	0	0	0
189/	1	**	2	0	2	0	0	0	1	0	0	0	0	0	0	0	0
444/	1	**	2	0	1	1	0	1	0	0	0	0	0	0	0	0	0
234/	1	**	2	0	1	0	2	0	0	0	0	0	0	0	0	0	0
246/	1	**	2	0	0	2	1	0	0	0	0	0	0	0	0	0	0
108/	1	**	1	3	0	0	0	0	0	1	0	0	0	0	0	0	0
426/	1	**	1	2	1	0	0	0	1	0	0	0	0	0	0	0	0
504/	1	**	1	2	0	1	0	1	0	0	0	0	0	0	0	0	0
267/	1	**	1	2	0	0	2	0	0	0	0	0	0	0	0	0	0
540/	1	**	1	1	2	0	0	1	0	0	0	0	0	0	0	0	0
1212/	1	**	1	1	1	1	1	0	0	0	0	0	0	0	0	0	0
214/	1	**	1	1	0	3	0	0	0	0	0	0	0	0	0	0	0
218/	1	**	1	0	3	0	1	0	0	0	0	0	0	0	0	0	0
348/	1	**	1	0	2	2	0	0	0	0	0	0	0	0	0	0	0
40/	1	**	0	4	0	0	0	0	1	0	0	0	0	0	0	0	0
204/	1	**	0	3	1	0	0	1	0	0	0	0	0	0	0	0	0
230/	1	**	0	3	0	1	1	0	0	0	0	0	0	0	0	0	0
372/	1	**	0	2	2	0	1	0	0	0	0	0	0	0	0	0	0
396/	1	**	0	2	1	2	0	0	0	0	0	0	0	0	0	0	0
286/	1	**	0	1	3	1	0	0	0	0	0	0	0	0	0	0	0
31/	2	**	0	0	5	0	0	0	0	0	0	0	0	0	0	0	0
-16/	1	**	5	0	0	0	0	0	0	0	0	1	0	0	0	0	0
-120/	1	**	4	1	0	0	0	0	0	0	1	0	0	0	0	0	0
-160/	1	**	4	0	1	0	0	0	0	1	0	0	0	0	0	0	0
-395/	2	**	4	0	0	1	0	0	1	0	0	0	0	0	0	0	0
-445/	2	**	4	0	0	0	1	1	0	0	0	0	0	0	0	0	0
-360/	1	**	3	2	0	0	0	0	0	1	0	0	0	0	0	0	0
-950/	1	**	3	1	1	0	0	0	1	0	0	0	0	0	0	0	0
-1130/	1	**	3	1	0	1	0	1	0	0	0	0	0	0	0	0	0
-600/	1	**	3	1	0	0	2	0	0	0	0	0	0	0	0	0	0
-605/	1	**	3	0	2	0	0	1	0	0	0	0	0	0	0	0	0
-1360/	1	**	3	0	1	1	1	0	0	0	0	0	0	0	0	0	0
-240/	1	**	3	0	0	3	0	0	0	0	0	0	0	0	0	0	0
-535/	1	**	2	3	0	0	0	0	1	0	0	0	0	0	0	0	0
-2055/	1	**	2	2	1	0	0	1	0	0	0	0	0	0	0	0	0
-2325/	1	**	2	2	0	1	1	0	0	0	0	0	0	0	0	0	0
-2505/	1	**	2	1	2	0	1	0	0	0	0	0	0	0	0	0	0
-2670/	1	**	2	1	1	2	0	0	0	0	0	0	0	0	0	0	0
-965/	1	**	2	0	3	1	0	0	0	0	0	0	0	0	0	0	0
-775/	2	**	1	4	0	0	0	1	0	0	0	0	0	0	0	0	0
-1900/	1	**	1	3	1	0	1	0	0	0	0	0	0	0	0	0	0
-1015/	1	**	1	3	0	2	0	0	0	0	0	0	0	0	0	0	0
-3300/	1	**	1	2	2	1	0	0	0	0	0	0	0	0	0	0	0
-1195/	2	**	1	1	4	0	0	0	0	0	0	0	0	0	0	0	0
-108/	1	**	0	5	0	0	1	0	0	0	0	0	0	0	0	0	0
-1255/	2	**	0	4	1	1	0	0	0	0	0	0	0	0	0	0	0
-455/	1	**	0	3	3	0	0	0	0	0	0	0	0	0	0	0	0
32/	1	**	6	0	0	0	0	0	0	0	1	0	0	0	0	0	0
288/	1	**	5	1	0	0	0	0	0	1	0	0	0	0	0	0	0
381/	1	**	5	0	1	0	0	0	1	0	0	0	0	0	0	0	0
456/	1	**	5	0	0	1	0	1	0	0	0	0	0	0	0	0	0
243/	1	**	5	0	0	0	2	0	0	0	0	0	0	0	0	0	0
2145/	2	**	4	2	0	0	0	0	1	0	0	0	0	0	0	0	0
2760/	1	**	4	1	1	0	0	1	0	0	0	0	0	0	0	0	0
3135/	1	**	4	1	0	1	1	0	0	0	0	0	0	0	0	0	0
3375/	2	**	4	0	2	0	1	0	0	0	0	0	0	0	0	0	0
1800/	1	**	4	0	1	2	0	0	0	0	0	0	0	0	0	0	0
2080/	1	**	3	3	0	0	0	1	0	0	0	0	0	0	0	0	0
7680/	1	**	3	2	1	0	1	0	0	0	0	0	0	0	0	0	0
4110/	1	**	3	2	0	2	0	0	0	0	0	0	0	0	0	0	0
8910/	1	**	3	1	2	1	0	0	0	0	0	0	0	0	0	0	0

1615/	2	**	3	0	4	0	0	0	0	0	0	0	0	0	0	0	0
4365/	2	**	2	4	0	0	1	0	0	0	0	0	0	0	0	0	0
10170/	1	**	2	3	1	1	0	0	0	0	0	0	0	0	0	0	0
5535/	1	**	2	2	3	0	0	0	0	0	0	0	0	0	0	0	0
1161/	1	**	1	5	0	1	0	0	0	0	0	0	0	0	0	0	0
3165/	1	**	1	4	2	0	0	0	0	0	0	0	0	0	0	0	0
483/	2	**	0	6	1	0	0	0	0	0	0	0	0	0	0	0	0
-64/	1	**	7	0	0	0	0	0	0	1	0	0	0	0	0	0	0
-1337/	2	**	6	1	0	0	0	0	1	0	0	0	0	0	0	0	0
-1729/	2	**	6	0	1	0	0	1	0	0	0	0	0	0	0	0	0
-987/	1	**	6	0	0	1	1	0	0	0	0	0	0	0	0	0	0
-5859/	2	**	5	2	0	0	0	1	0	0	0	0	0	0	0	0	0
-7245/	1	**	5	1	1	0	1	0	0	0	0	0	0	0	0	0	0
-3885/	1	**	5	1	0	2	0	0	0	0	0	0	0	0	0	0	0
-8421/	2	**	5	0	2	1	0	0	0	0	0	0	0	0	0	0	0
-6860/	1	**	4	3	0	0	1	0	0	0	0	0	0	0	0	0	0
-24045/	1	**	4	2	1	1	0	0	0	0	0	0	0	0	0	0	0
-17465/	2	**	4	1	3	0	0	0	0	0	0	0	0	0	0	0	0
-18305/	2	**	3	4	0	1	0	0	0	0	0	0	0	0	0	0	0
-19985/	1	**	3	3	2	0	0	0	0	0	0	0	0	0	0	0	0
-6867/	1	**	2	5	1	0	0	0	0	0	0	0	0	0	0	0	0
-375/	1	**	1	7	0	0	0	0	0	0	0	0	0	0	0	0	0
255/	2	**	8	0	0	0	0	0	1	0	0	0	0	0	0	0	0
1496/	1	**	7	1	0	0	0	1	0	0	0	0	0	0	0	0	0
1860/	1	**	7	0	1	0	1	0	0	0	0	0	0	0	0	0	0
1000/	1	**	7	0	0	2	0	0	0	0	0	0	0	0	0	0	0
7392/	1	**	6	2	0	0	1	0	0	0	0	0	0	0	0	0	0
17332/	1	**	6	1	1	1	0	0	0	0	0	0	0	0	0	0	0
3150/	1	**	6	0	3	0	0	0	0	0	0	0	0	0	0	0	0
19796/	1	**	5	3	0	1	0	0	0	0	0	0	0	0	0	0	0
32466/	1	**	5	2	2	0	0	0	0	0	0	0	0	0	0	0	0
31010/	1	**	4	4	1	0	0	0	0	0	0	0	0	0	0	0	0
4746/	1	**	3	6	0	0	0	0	0	0	0	0	0	0	0	0	0
-501/	2	**	9	0	0	0	0	1	0	0	0	0	0	0	0	0	0
-6399/	2	**	8	1	0	0	1	0	0	0	0	0	0	0	0	0	0
-7533/	2	**	8	0	1	1	0	0	0	0	0	0	0	0	0	0	0
-17208/	1	**	7	2	0	1	0	0	0	0	0	0	0	0	0	0	0
-18846/	1	**	7	1	2	0	0	0	0	0	0	0	0	0	0	0	0
-50442/	1	**	6	3	1	0	0	0	0	0	0	0	0	0	0	0	0
-17388/	1	**	5	5	0	0	0	0	0	0	0	0	0	0	0	0	0
957/	2	**	10	0	0	0	1	0	0	0	0	0	0	0	0	0	0
6465/	1	**	9	1	0	1	0	0	0	0	0	0	0	0	0	0	0
7095/	2	**	9	0	2	0	0	0	0	0	0	0	0	0	0	0	0
73305/	2	**	8	2	1	0	0	0	0	0	0	0	0	0	0	0	0
28110/	1	**	7	4	0	0	0	0	0	0	0	0	0	0	0	0	0
-1749/	2	**	11	0	0	1	0	0	0	0	0	0	0	0	0	0	0
-24321/	2	**	10	1	1	0	0	0	0	0	0	0	0	0	0	0	0
-46695/	2	**	9	3	0	0	0	0	0	0	0	0	0	0	0	0	0
3003/	2	**	12	0	1	0	0	0	0	0	0	0	0	0	0	0	0
10395/	1	**	11	2	0	0	0	0	0	0	0	0	0	0	0	0	0
-4719/	2	**	13	1	0	0	0	0	0	0	0	0	0	0	0	0	0
429/	2	**	15	0	0	0	0	0	0	0	0	0	0	0	0	0	0

UNCLASSIFIED

P= 2

C1515 =

1/	2	**	0	0	0	0	0	0	0	0	0	0	0	0	0	0	1
-1/	1	**	1	0	0	0	0	0	0	0	0	0	0	0	0	1	0
-3/	2	**	0	1	0	0	0	0	0	0	0	0	0	0	1	0	0
-2/	1	**	0	0	1	0	0	0	0	0	0	0	0	1	0	0	0
-5/	2	**	0	0	0	1	0	0	0	0	0	0	1	0	0	0	0
-3/	1	**	0	0	0	0	1	0	0	0	0	1	0	0	0	0	0
-7/	2	**	0	0	0	0	0	1	0	0	0	1	0	0	0	0	0
-4/	1	**	0	0	0	0	0	0	1	1	0	0	0	0	0	0	0
2/	1	**	2	0	0	0	0	0	0	0	0	0	0	0	1	0	0
6/	1	**	1	1	0	0	0	0	0	0	0	0	0	1	0	0	0
8/	1	**	1	0	1	0	0	0	0	0	0	0	1	0	0	0	0
10/	1	**	1	0	0	1	0	0	0	0	0	1	0	0	0	0	0
12/	1	**	1	0	0	0	1	0	0	0	1	0	0	0	0	0	0
14/	1	**	1	0	0	0	0	1	0	1	0	0	0	0	0	0	0
61/	8	**	1	0	0	0	0	0	2	0	0	0	0	0	0	0	0
9/	2	**	0	2	0	0	0	0	0	0	0	0	1	0	0	0	0
12/	1	**	0	1	1	0	0	0	0	0	0	1	0	0	0	0	0
15/	1	**	0	1	0	1	0	0	0	0	1	0	0	0	0	0	0
18/	1	**	0	1	0	0	1	0	0	1	0	0	0	0	0	0	0
81/	4	**	0	1	0	0	0	1	1	0	0	0	0	0	0	0	0
8/	1	**	0	0	2	0	0	0	0	0	1	0	0	0	0	0	0
20/	1	**	0	0	1	1	0	0	0	1	0	0	0	0	0	0	0
93/	4	**	0	0	1	0	1	0	1	0	0	0	0	0	0	0	0
97/	8	**	0	0	1	0	0	2	0	0	0	0	0	0	0	0	0
97/	8	**	0	0	0	2	0	0	1	0	0	0	0	0	0	0	0
105/	4	**	0	0	0	1	1	1	0	0	0	0	0	0	0	0	0
109/	24	**	0	0	0	0	3	0	0	0	0	0	0	0	0	0	0
-4/	1	**	3	0	0	0	0	0	0	0	0	0	0	1	0	0	0
-18/	1	**	2	1	0	0	0	0	0	0	0	0	1	0	0	0	0
-24/	1	**	2	0	1	0	0	0	0	0	0	1	0	0	0	0	0
-30/	1	**	2	0	0	1	0	0	0	0	1	0	0	0	0	0	0
-36/	1	**	2	0	0	0	1	0	0	1	0	0	0	0	0	0	0
-657/	16	**	2	0	0	0	0	1	1	0	0	0	0	0	0	0	0
-27/	1	**	1	2	0	0	0	0	0	0	0	1	0	0	0	0	0
-72/	1	**	1	1	1	0	0	0	0	0	1	0	0	0	0	0	0
-90/	1	**	1	1	0	1	0	0	0	1	0	0	0	0	0	0	0
-849/	8	**	1	1	0	0	1	0	1	0	0	0	0	0	0	0	0
-225/	4	**	1	1	0	0	0	2	0	0	0	0	0	0	0	0	0
-48/	1	**	1	0	2	0	0	0	0	1	0	0	0	0	0	0	0
-945/	8	**	1	0	1	1	0	0	1	0	0	0	0	0	0	0	0
-261/	2	**	1	0	1	0	1	1	0	0	0	0	0	0	0	0	0
-273/	4	**	1	0	0	2	0	1	0	0	0	0	0	0	0	0	0
-285/	4	**	1	0	0	1	2	0	0	0	0	0	0	0	0	0	0
-27/	2	**	0	3	0	0	0	0	0	0	1	0	0	0	0	0	0
-54/	1	**	0	2	1	0	0	0	0	1	0	0	0	0	0	0	0
-1065/	16	**	0	2	0	1	0	0	1	0	0	0	0	0	0	0	0
-1191/	16	**	0	2	0	0	1	1	0	0	0	0	0	0	0	0	0
-1137/	16	**	0	1	2	0	0	0	1	0	0	0	0	0	0	0	0
-1335/	8	**	0	1	1	1	0	1	0	0	0	0	0	0	0	0	0
-705/	8	**	0	1	1	0	2	0	0	0	0	0	0	0	0	0	0
-741/	8	**	0	1	0	2	1	0	0	0	0	0	0	0	0	0	0
-477/	16	**	0	0	3	0	0	1	0	0	0	0	0	0	0	0	0
-1605/	16	**	0	0	2	1	1	0	0	0	0	0	0	0	0	0	0
-71/	2	**	0	0	1	3	0	0	0	0	0	0	0	0	0	0	0
8/	1	**	4	0	0	0	0	0	0	0	0	0	1	0	0	0	0
48/	1	**	3	1	0	0	0	0	0	0	0	1	0	0	0	0	0
64/	1	**	3	0	1	0	0	0	0	0	1	0	0	0	0	0	0
80/	1	**	3	0	0	1	0	0	0	1	0	0	0	0	0	0	0

3037/	32	**	3	0	0	0	1	0	1	0	0	0	0	0	0	0	0
1627/	32	**	3	0	0	0	0	2	0	0	0	0	0	0	0	0	0
108/	1	**	2	2	0	0	0	0	0	0	1	0	0	0	0	0	0
288/	1	**	2	1	1	0	0	0	0	1	0	0	0	0	0	0	0
11415/	32	**	2	1	0	1	0	0	1	0	0	0	0	0	0	0	0
12849/	32	**	2	1	0	0	1	1	0	0	0	0	0	0	0	0	0
12183/	64	**	2	0	2	0	0	0	1	0	0	0	0	0	0	0	0
14385/	32	**	2	0	1	1	0	1	0	0	0	0	0	0	0	0	0
237/	1	**	2	0	1	0	2	0	0	0	0	0	0	0	0	0	0
249/	1	**	2	0	0	2	1	0	0	0	0	0	0	0	0	0	0
108/	1	**	1	3	0	0	0	0	0	1	0	0	0	0	0	0	0
13719/	32	**	1	2	1	0	0	0	1	0	0	0	0	0	0	0	0
510/	1	**	1	2	0	1	0	1	0	0	0	0	0	0	0	0	0
8673/	32	**	1	2	0	0	2	0	0	0	0	0	0	0	0	0	0
546/	1	**	1	1	2	0	0	1	0	0	0	0	0	0	0	0	0
19665/	16	**	1	1	1	1	1	0	0	0	0	0	0	0	0	0	0
217/	1	**	1	1	0	3	0	0	0	0	0	0	0	0	0	0	0
221/	1	**	1	0	3	0	1	0	0	0	0	0	0	0	0	0	0
11313/	32	**	1	0	2	2	0	0	0	0	0	0	0	0	0	0	0
5149/	128	**	0	4	0	0	0	0	1	0	0	0	0	0	0	0	0
6597/	32	**	0	3	1	0	0	1	0	0	0	0	0	0	0	0	0
3735/	16	**	0	3	0	1	1	0	0	0	0	0	0	0	0	0	0
24153/	64	**	0	2	2	0	1	0	0	0	0	0	0	0	0	0	0
12873/	32	**	0	2	1	2	0	0	0	0	0	0	0	0	0	0	0
9305/	32	**	0	1	3	1	0	0	0	0	0	0	0	0	0	0	0
10089/	640	**	0	0	5	0	0	0	0	0	0	0	0	0	0	0	0
-16/	1	**	5	0	0	0	0	0	0	0	0	1	0	0	0	0	0
-120/	1	**	4	1	0	0	0	0	0	0	1	0	0	0	0	0	0
-160/	1	**	4	0	1	0	0	0	0	1	0	0	0	0	0	0	0
-50885/	256	**	4	0	0	1	0	0	1	0	0	0	0	0	0	0	0
-57835/	256	**	4	0	0	0	1	1	0	0	0	0	0	0	0	0	0
-360/	1	**	3	2	0	0	0	0	0	1	0	0	0	0	0	0	0
-61125/	64	**	3	1	1	0	0	0	1	0	0	0	0	0	0	0	0
-36615/	32	**	3	1	0	1	0	1	0	0	0	0	0	0	0	0	0
-39005/	64	**	3	1	0	0	2	0	0	0	0	0	0	0	0	0	0
-39175/	64	**	3	0	2	0	0	1	0	0	0	0	0	0	0	0	0
-88285/	64	**	3	0	1	1	1	0	0	0	0	0	0	0	0	0	0
-730/	3	**	3	0	0	3	0	0	0	0	0	0	0	0	0	0	0
-68805/	128	**	2	3	0	0	0	0	1	0	0	0	0	0	0	0	0
-265875/	128	**	2	2	1	0	0	1	0	0	0	0	0	0	0	0	0
-151095/	64	**	2	2	0	1	1	0	0	0	0	0	0	0	0	0	0
-325335/	128	**	2	1	2	0	1	0	0	0	0	0	0	0	0	0	0
-173655/	64	**	2	1	1	2	0	0	0	0	0	0	0	0	0	0	0
-125655/	128	**	2	0	3	1	0	0	0	0	0	0	0	0	0	0	0
-25045/	64	**	1	4	0	0	0	1	0	0	0	0	0	0	0	0	0
-123435/	64	**	1	3	1	0	1	0	0	0	0	0	0	0	0	0	0
-16515/	16	**	1	3	0	2	0	0	0	0	0	0	0	0	0	0	0
-214905/	64	**	1	2	2	1	0	0	0	0	0	0	0	0	0	0	0
-38945/	64	**	1	1	4	0	0	0	0	0	0	0	0	0	0	0	0
-14033/	128	**	0	5	0	0	1	0	0	0	0	0	0	0	0	0	0
-40885/	64	**	0	4	1	1	0	0	0	0	0	0	0	0	0	0	0
-59355/	128	**	0	3	3	0	0	0	0	0	0	0	0	0	0	0	0
32/	1	**	6	0	0	0	0	0	0	0	1	0	0	0	0	0	0
288/	1	**	5	1	0	0	0	0	0	1	0	0	0	0	0	0	0
195915/	512	**	5	0	1	0	0	0	1	0	0	0	0	0	0	0	0
59109/	128	**	5	0	0	1	0	1	0	0	0	0	0	0	0	0	0
126561/	512	**	5	0	0	0	2	0	0	0	0	0	0	0	0	0	0
1102455/	1024	**	4	2	0	0	0	0	1	0	0	0	0	0	0	0	0
1428255/	512	**	4	1	1	0	0	1	0	0	0	0	0	0	0	0	0
815445/	256	**	4	1	0	1	1	0	0	0	0	0	0	0	0	0	0
1754085/	1024	**	4	0	2	0	1	0	0	0	0	0	0	0	0	0	0
936645/	512	**	4	0	1	2	0	0	0	0	0	0	0	0	0	0	0
268815/	128	**	3	3	0	0	0	1	0	0	0	0	0	0	0	0	0
1996065/	256	**	3	2	1	0	1	0	0	0	0	0	0	0	0	0	0
535335/	128	**	3	2	0	2	0	0	0	0	0	0	0	0	0	0	0

UNCLASSIFIED

290235/	32	**	3	1	2	1	0	0	0	0	0	0	0	0	0	0	0
421415/	512	**	3	0	4	0	0	0	0	0	0	0	0	0	0	0	0
567165/	256	**	2	4	0	0	1	0	0	0	0	0	0	0	0	0	0
1325925/	128	**	2	3	1	1	0	0	0	0	0	0	0	0	0	0	0
2889765/	512	**	2	2	3	0	0	0	0	0	0	0	0	0	0	0	0
37857/	32	**	1	5	0	1	0	0	0	0	0	0	0	0	0	0	0
1653765/	512	**	1	4	2	0	0	0	0	0	0	0	0	0	0	0	0
126297/	512	**	0	6	1	0	0	0	0	0	0	0	0	0	0	0	0
-64/	1	**	7	0	0	0	0	0	0	1	0	0	0	0	0	0	0
-1373253/	2048	**	6	1	0	0	0	0	1	0	0	0	0	0	0	0	0
-1788577/	2048	**	6	0	1	0	0	1	0	0	0	0	0	0	0	0	0
-1027789/	1024	**	6	0	0	1	1	0	0	0	0	0	0	0	0	0	0
-756819/	256	**	5	2	0	0	0	1	0	0	0	0	0	0	0	0	0
-7534233/	1024	**	5	1	1	0	1	0	0	0	0	0	0	0	0	0	0
-31647/	8	**	5	1	0	2	0	0	0	0	0	0	0	0	0	0	0
-4390155/	1024	**	5	0	2	1	0	0	0	0	0	0	0	0	0	0	0
-7130655/	1024	**	4	3	0	0	1	0	0	0	0	0	0	0	0	0	0
-6272805/	256	**	4	2	1	1	0	0	0	0	0	0	0	0	0	0	0
-18247985/	2048	**	4	1	3	0	0	0	0	0	0	0	0	0	0	0	0
-2388715/	256	**	3	4	0	1	0	0	0	0	0	0	0	0	0	0	0
-5224485/	256	**	3	3	2	0	0	0	0	0	0	0	0	0	0	0	0
-7187439/	1024	**	2	5	1	0	0	0	0	0	0	0	0	0	0	0	0
-98231/	256	**	1	7	0	0	0	0	0	0	0	0	0	0	0	0	0
4187869/	32768	**	8	0	0	0	0	0	1	0	0	0	0	0	0	0	0
3089529/	2048	**	7	1	0	0	0	1	0	0	0	0	0	0	0	0	0
7738739/	4096	**	7	0	1	0	1	0	0	0	0	0	0	0	0	0	0
2087263/	2048	**	7	0	0	2	0	0	0	0	0	0	0	0	0	0	0
7683039/	1024	**	6	2	0	0	1	0	0	0	0	0	0	0	0	0	0
36191127/	2048	**	6	1	1	1	0	0	0	0	0	0	0	0	0	0	0
79028005/	24576	**	6	0	3	0	0	0	0	0	0	0	0	0	0	0	0
10337691/	512	**	5	3	0	1	0	0	0	0	0	0	0	0	0	0	0
135890013/	4096	**	5	2	2	0	0	0	0	0	0	0	0	0	0	0	0
259847035/	8192	**	4	4	1	0	0	0	0	0	0	0	0	0	0	0	0
9954483/	2048	**	3	6	0	0	0	0	0	0	0	0	0	0	0	0	0
-4134959/	16384	**	9	0	0	0	0	1	0	0	0	0	0	0	0	0	0
-106387785/	32768	**	8	1	0	0	1	0	0	0	0	0	0	0	0	0	0
-62959023/	16384	**	8	0	1	1	0	0	0	0	0	0	0	0	0	0	0
-8989965/	512	**	7	2	0	1	0	0	0	0	0	0	0	0	0	0	0
-39469221/	2048	**	7	1	2	0	0	0	0	0	0	0	0	0	0	0	0
-423012765/	8192	**	6	3	1	0	0	0	0	0	0	0	0	0	0	0	0
-182521773/	10240	**	5	5	0	0	0	0	0	0	0	0	0	0	0	0	0
31805971/	65536	**	10	0	0	0	1	0	0	0	0	0	0	0	0	0	0
1689375/	256	**	9	1	0	1	0	0	0	0	0	0	0	0	0	0	0
475880825/	131072	**	9	0	2	0	0	0	0	0	0	0	0	0	0	0	0
4922104815/	131072	**	8	2	1	0	0	0	0	0	0	0	0	0	0	0	0
945190125/	32768	**	7	4	0	0	0	0	0	0	0	0	0	0	0	0	0
-58514213/	65536	**	11	0	0	1	0	0	0	0	0	0	0	0	0	0	0
-3269039895/	262144	**	10	1	1	0	0	0	0	0	0	0	0	0	0	0	0
-4715613485/	196608	**	9	3	0	0	0	0	0	0	0	0	0	0	0	0	0
3232148669/	2097152	**	12	0	1	0	0	0	0	0	0	0	0	0	0	0	0
5605766781/	524288	**	11	2	0	0	0	0	0	0	0	0	0	0	0	0	0
-318554525/	131072	**	13	1	0	0	0	0	0	0	0	0	0	0	0	0	0
27846385613/	125829120	**	15	0	0	0	0	0	0	0	0	0	0	0	0	0	0

P= 2

C1616 =

1/	2	**	0	0	0	0	0	0	0	0	0	0	0	0	0	0	0	1
-1/	1	**	1	0	0	0	0	0	0	0	0	0	0	0	0	0	1	0
-3/	2	**	0	1	0	0	0	0	0	0	0	0	0	0	0	1	0	0
-2/	1	**	0	0	1	0	0	0	0	0	0	0	0	0	1	0	0	0
-5/	2	**	0	0	0	1	0	0	0	0	0	0	0	1	0	0	0	0
-3/	1	**	0	0	0	0	1	0	0	0	0	0	1	0	0	0	0	0
-7/	2	**	0	0	0	0	0	1	0	0	0	1	0	0	0	0	0	0
-4/	1	**	0	0	0	0	0	0	1	0	1	0	0	0	0	0	0	0
-9/	4	**	0	0	0	0	0	0	0	2	0	0	0	0	0	0	0	0
2/	1	**	2	0	0	0	0	0	0	0	0	0	0	0	0	1	0	0
6/	1	**	1	1	0	0	0	0	0	0	0	0	0	0	1	0	0	0
8/	1	**	1	0	1	0	0	0	0	0	0	0	0	1	0	0	0	0
10/	1	**	1	0	0	1	0	0	0	0	0	0	1	0	0	0	0	0
12/	1	**	1	0	0	0	1	0	0	0	0	1	0	0	0	0	0	0
14/	1	**	1	0	0	0	0	1	0	0	1	0	0	0	0	0	0	0
16/	1	**	1	0	0	0	0	0	1	1	0	0	0	0	0	0	0	0
9/	2	**	0	2	0	0	0	0	0	0	0	0	0	1	0	0	0	0
12/	1	**	0	1	1	0	0	0	0	0	0	0	1	0	0	0	0	0
15/	1	**	0	1	0	1	0	0	0	0	0	1	0	0	0	0	0	0
18/	1	**	0	1	0	0	1	0	0	0	1	0	0	0	0	0	0	0
21/	1	**	0	1	0	0	0	1	0	1	0	0	0	0	0	0	0	0
11/	1	**	0	1	0	0	0	0	2	0	0	0	0	0	0	0	0	0
8/	1	**	0	0	2	0	0	0	0	0	0	1	0	0	0	0	0	0
20/	1	**	0	0	1	1	0	0	0	0	1	0	0	0	0	0	0	0
24/	1	**	0	0	1	0	1	0	0	1	0	0	0	0	0	0	0	0
26/	1	**	0	0	1	0	0	1	1	0	0	0	0	0	0	0	0	0
25/	2	**	0	0	0	2	0	0	0	1	0	0	0	0	0	0	0	0
28/	1	**	0	0	0	1	1	0	1	0	0	0	0	0	0	0	0	0
29/	2	**	0	0	0	1	0	2	0	0	0	0	0	0	0	0	0	0
15/	1	**	0	0	0	0	2	1	0	0	0	0	0	0	0	0	0	0
-4/	1	**	3	0	0	0	0	0	0	0	0	0	0	0	1	0	0	0
-18/	1	**	2	1	0	0	0	0	0	0	0	0	0	1	0	0	0	0
-24/	1	**	2	0	1	0	0	0	0	0	0	0	1	0	0	0	0	0
-30/	1	**	2	0	0	1	0	0	0	0	0	1	0	0	0	0	0	0
-36/	1	**	2	0	0	0	1	0	0	0	1	0	0	0	0	0	0	0
-42/	1	**	2	0	0	0	0	1	0	1	0	0	0	0	0	0	0	0
-45/	2	**	2	0	0	0	0	0	2	0	0	0	0	0	0	0	0	0
-27/	1	**	1	2	0	0	0	0	0	0	0	0	1	0	0	0	0	0
-72/	1	**	1	1	1	0	0	0	0	0	0	1	0	0	0	0	0	0
-90/	1	**	1	1	0	1	0	0	0	0	1	0	0	0	0	0	0	0
-108/	1	**	1	1	0	0	1	0	0	1	0	0	0	0	0	0	0	0
-120/	1	**	1	1	0	0	0	1	1	0	0	0	0	0	0	0	0	0
-48/	1	**	1	0	2	0	0	0	0	0	1	0	0	0	0	0	0	0
-120/	1	**	1	0	1	1	0	0	0	1	0	0	0	0	0	0	0	0
-138/	1	**	1	0	1	0	1	0	1	0	0	0	0	0	0	0	0	0
-72/	1	**	1	0	1	0	0	2	0	0	0	0	0	0	0	0	0	0
-72/	1	**	1	0	0	2	0	0	1	0	0	0	0	0	0	0	0	0
-156/	1	**	1	0	0	1	1	1	0	0	0	0	0	0	0	0	0	0
-27/	1	**	1	0	0	0	3	0	0	0	0	0	0	0	0	0	0	0
-27/	2	**	0	3	0	0	0	0	0	0	0	1	0	0	0	0	0	0
-54/	1	**	0	2	1	0	0	0	0	0	1	0	0	0	0	0	0	0
-135/	2	**	0	2	0	1	0	0	0	1	0	0	0	0	0	0	0	0
-78/	1	**	0	2	0	0	1	0	1	0	0	0	0	0	0	0	0	0
-165/	4	**	0	2	0	0	0	2	0	0	0	0	0	0	0	0	0	0
-72/	1	**	0	1	2	0	0	0	0	1	0	0	0	0	0	0	0	0
-174/	1	**	0	1	1	1	0	0	1	0	0	0	0	0	0	0	0	0
-192/	1	**	0	1	1	0	1	1	0	0	0	0	0	0	0	0	0	0
-201/	2	**	0	1	0	2	0	1	0	0	0	0	0	0	0	0	0	0
-105/	1	**	0	1	0	1	2	0	0	0	0	0	0	0	0	0	0	0

UNCLASSIFIED

-31/	1	**	0	0	3	0	0	0	1	0	0	0	0	0	0	0	0	0
-108/	1	**	0	0	2	1	0	1	0	0	0	0	0	0	0	0	0	0
-57/	1	**	0	0	2	0	2	0	0	0	0	0	0	0	0	0	0	0
-120/	1	**	0	0	1	2	1	0	0	0	0	0	0	0	0	0	0	0
-85/	8	**	0	0	0	4	0	0	0	0	0	0	0	0	0	0	0	0
8/	1	**	4	0	0	0	0	0	0	0	0	0	0	1	0	0	0	0
48/	1	**	3	1	0	0	0	0	0	0	0	0	1	0	0	0	0	0
64/	1	**	3	0	1	0	0	0	0	0	0	1	0	0	0	0	0	0
80/	1	**	3	0	0	1	0	0	0	0	1	0	0	0	0	0	0	0
96/	1	**	3	0	0	0	1	0	0	1	0	0	0	0	0	0	0	0
108/	1	**	3	0	0	0	0	1	1	0	0	0	0	0	0	0	0	0
108/	1	**	2	2	0	0	0	0	0	0	0	1	0	0	0	0	0	0
288/	1	**	2	1	1	0	0	0	0	0	1	0	0	0	0	0	0	0
360/	1	**	2	1	0	1	0	0	0	1	0	0	0	0	0	0	0	0
420/	1	**	2	1	0	0	1	0	1	0	0	0	0	0	0	0	0	0
222/	1	**	2	1	0	0	0	2	0	0	0	0	0	0	0	0	0	0
192/	1	**	2	0	2	0	0	0	0	1	0	0	0	0	0	0	0	0
468/	1	**	2	0	1	1	0	0	1	0	0	0	0	0	0	0	0	0
516/	1	**	2	0	1	0	1	1	0	0	0	0	0	0	0	0	0	0
270/	1	**	2	0	0	2	0	1	0	0	0	0	0	0	0	0	0	0
282/	1	**	2	0	0	1	2	0	0	0	0	0	0	0	0	0	0	0
108/	1	**	1	3	0	0	0	0	0	0	1	0	0	0	0	0	0	0
432/	1	**	1	2	1	0	0	0	0	1	0	0	0	0	0	0	0	0
528/	1	**	1	2	0	1	0	0	1	0	0	0	0	0	0	0	0	0
588/	1	**	1	2	0	0	1	1	0	0	0	0	0	0	0	0	0	0
564/	1	**	1	1	2	0	0	0	1	0	0	0	0	0	0	0	0	0
1320/	1	**	1	1	1	1	0	1	0	0	0	0	0	0	0	0	0	0
696/	1	**	1	1	1	0	2	0	0	0	0	0	0	0	0	0	0	0
732/	1	**	1	1	0	2	1	0	0	0	0	0	0	0	0	0	0	0
236/	1	**	1	0	3	0	0	1	0	0	0	0	0	0	0	0	0	0
792/	1	**	1	0	2	1	1	0	0	0	0	0	0	0	0	0	0	0
280/	1	**	1	0	1	3	0	0	0	0	0	0	0	0	0	0	0	0
81/	2	**	0	4	0	0	0	0	0	1	0	0	0	0	0	0	0	0
212/	1	**	0	3	1	0	0	0	1	0	0	0	0	0	0	0	0	0
250/	1	**	0	3	0	1	0	1	0	0	0	0	0	0	0	0	0	0
132/	1	**	0	3	0	0	2	0	0	0	0	0	0	0	0	0	0	0
402/	1	**	0	2	2	0	0	1	0	0	0	0	0	0	0	0	0	0
900/	1	**	0	2	1	1	1	0	0	0	0	0	0	0	0	0	0	0
159/	1	**	0	2	0	3	0	0	0	0	0	0	0	0	0	0	0	0
324/	1	**	0	1	3	0	1	0	0	0	0	0	0	0	0	0	0	0
516/	1	**	0	1	2	2	0	0	0	0	0	0	0	0	0	0	0	0
93/	1	**	0	0	4	1	0	0	0	0	0	0	0	0	0	0	0	0
-16/	1	**	5	0	0	0	0	0	0	0	0	0	1	0	0	0	0	0
-120/	1	**	4	1	0	0	0	0	0	0	0	1	0	0	0	0	0	0
-160/	1	**	4	0	1	0	0	0	0	0	1	0	0	0	0	0	0	0
-200/	1	**	4	0	0	1	0	0	0	1	0	0	0	0	0	0	0	0
-235/	1	**	4	0	0	0	1	0	1	0	0	0	0	0	0	0	0	0
-125/	1	**	4	0	0	0	0	2	0	0	0	0	0	0	0	0	0	0
-360/	1	**	3	2	0	0	0	0	0	0	1	0	0	0	0	0	0	0
-960/	1	**	3	1	1	0	0	0	0	1	0	0	0	0	0	0	0	0
-1180/	1	**	3	1	0	1	0	0	1	0	0	0	0	0	0	0	0	0
-1320/	1	**	3	1	0	0	1	1	0	0	0	0	0	0	0	0	0	0
-630/	1	**	3	0	2	0	0	0	1	0	0	0	0	0	0	0	0	0
-1480/	1	**	3	0	1	1	0	1	0	0	0	0	0	0	0	0	0	0
-780/	1	**	3	0	1	0	2	0	0	0	0	0	0	0	0	0	0	0
-820/	1	**	3	0	0	2	1	0	0	0	0	0	0	0	0	0	0	0
-540/	1	**	2	3	0	0	0	0	0	1	0	0	0	0	0	0	0	0
-2130/	1	**	2	2	1	0	0	0	1	0	0	0	0	0	0	0	0	0
-2520/	1	**	2	2	0	1	0	1	0	0	0	0	0	0	0	0	0	0
-1335/	1	**	2	2	0	0	2	0	0	0	0	0	0	0	0	0	0	0
-2700/	1	**	2	1	2	0	0	1	0	0	0	0	0	0	0	0	0	0
-6060/	1	**	2	1	1	1	1	0	0	0	0	0	0	0	0	0	0	0
-1070/	1	**	2	1	0	3	0	0	0	0	0	0	0	0	0	0	0	0
-1090/	1	**	2	0	3	0	1	0	0	0	0	0	0	0	0	0	0	0
-1740/	1	**	2	0	2	2	0	0	0	0	0	0	0	0	0	0	0	0

-400/	1	**	1	4	0	0	0	0	1	0	0	0	0	0	0	0	0	0
-2040/	1	**	1	3	1	0	0	1	0	0	0	0	0	0	0	0	0	0
-2300/	1	**	1	3	0	1	1	0	0	0	0	0	0	0	0	0	0	0
-3720/	1	**	1	2	2	0	1	0	0	0	0	0	0	0	0	0	0	0
-3960/	1	**	1	2	1	2	0	0	0	0	0	0	0	0	0	0	0	0
-2860/	1	**	1	1	3	1	0	0	0	0	0	0	0	0	0	0	0	0
-155/	1	**	1	0	5	0	0	0	0	0	0	0	0	0	0	0	0	0
-231/	2	**	0	5	0	0	0	1	0	0	0	0	0	0	0	0	0	0
-705/	1	**	0	4	1	0	1	0	0	0	0	0	0	0	0	0	0	0
-1505/	4	**	0	4	0	2	0	0	0	0	0	0	0	0	0	0	0	0
-1630/	1	**	0	3	2	1	0	0	0	0	0	0	0	0	0	0	0	0
-885/	2	**	0	2	4	0	0	0	0	0	0	0	0	0	0	0	0	0
32/	1	**	6	0	0	0	0	0	0	0	0	1	0	0	0	0	0	0
288/	1	**	5	1	0	0	0	0	0	0	1	0	0	0	0	0	0	0
384/	1	**	5	0	1	0	0	0	0	1	0	0	0	0	0	0	0	0
474/	1	**	5	0	0	1	0	0	1	0	0	0	0	0	0	0	0	0
534/	1	**	5	0	0	0	1	1	0	0	0	0	0	0	0	0	0	0
1080/	1	**	4	2	0	0	0	0	0	1	0	0	0	0	0	0	0	0
2850/	1	**	4	1	1	0	0	0	1	0	0	0	0	0	0	0	0	0
3390/	1	**	4	1	0	1	0	1	0	0	0	0	0	0	0	0	0	0
1800/	1	**	4	1	0	0	2	0	0	0	0	0	0	0	0	0	0	0
1815/	1	**	4	0	2	0	0	1	0	0	0	0	0	0	0	0	0	0
4080/	1	**	4	0	1	1	1	0	0	0	0	0	0	0	0	0	0	0
720/	1	**	4	0	0	3	0	0	0	0	0	0	0	0	0	0	0	0
2140/	1	**	3	3	0	0	0	0	1	0	0	0	0	0	0	0	0	0
8220/	1	**	3	2	1	0	0	1	0	0	0	0	0	0	0	0	0	0
9300/	1	**	3	2	0	1	1	0	0	0	0	0	0	0	0	0	0	0
10020/	1	**	3	1	2	0	1	0	0	0	0	0	0	0	0	0	0	0
10680/	1	**	3	1	1	2	0	0	0	0	0	0	0	0	0	0	0	0
3860/	1	**	3	0	3	1	0	0	0	0	0	0	0	0	0	0	0	0
2325/	1	**	2	4	0	0	0	1	0	0	0	0	0	0	0	0	0	0
11400/	1	**	2	3	1	0	1	0	0	0	0	0	0	0	0	0	0	0
6090/	1	**	2	3	0	2	0	0	0	0	0	0	0	0	0	0	0	0
19800/	1	**	2	2	2	1	0	0	0	0	0	0	0	0	0	0	0	0
3585/	1	**	2	1	4	0	0	0	0	0	0	0	0	0	0	0	0	0
1296/	1	**	1	5	0	0	1	0	0	0	0	0	0	0	0	0	0	0
7530/	1	**	1	4	1	1	0	0	0	0	0	0	0	0	0	0	0	0
5460/	1	**	1	3	3	0	0	0	0	0	0	0	0	0	0	0	0	0
573/	2	**	0	6	0	1	0	0	0	0	0	0	0	0	0	0	0	0
936/	1	**	0	5	2	0	0	0	0	0	0	0	0	0	0	0	0	0
-64/	1	**	7	0	0	0	0	0	0	0	1	0	0	0	0	0	0	0
-672/	1	**	6	1	0	0	0	0	0	1	0	0	0	0	0	0	0	0
-889/	1	**	6	0	1	0	0	0	1	0	0	0	0	0	0	0	0	0
-1064/	1	**	6	0	0	1	0	1	0	0	0	0	0	0	0	0	0	0
-567/	1	**	6	0	0	0	2	0	0	0	0	0	0	0	0	0	0	0
-3003/	1	**	5	2	0	0	0	0	1	0	0	0	0	0	0	0	0	0
-7728/	1	**	5	1	1	0	0	1	0	0	0	0	0	0	0	0	0	0
-8778/	1	**	5	1	0	1	1	0	0	0	0	0	0	0	0	0	0	0
-4725/	1	**	5	0	2	0	1	0	0	0	0	0	0	0	0	0	0	0
-5040/	1	**	5	0	1	2	0	0	0	0	0	0	0	0	0	0	0	0
-7280/	1	**	4	3	0	0	0	1	0	0	0	0	0	0	0	0	0	0
-26880/	1	**	4	2	1	0	1	0	0	0	0	0	0	0	0	0	0	0
-14385/	1	**	4	2	0	2	0	0	0	0	0	0	0	0	0	0	0	0
-31185/	1	**	4	1	2	1	0	0	0	0	0	0	0	0	0	0	0	0
-11305/	4	**	4	0	4	0	0	0	0	0	0	0	0	0	0	0	0	0
-10185/	1	**	3	4	0	0	1	0	0	0	0	0	0	0	0	0	0	0
-47460/	1	**	3	3	1	1	0	0	0	0	0	0	0	0	0	0	0	0
-25830/	1	**	3	2	3	0	0	0	0	0	0	0	0	0	0	0	0	0
-8127/	1	**	2	5	0	1	0	0	0	0	0	0	0	0	0	0	0	0
-22155/	1	**	2	4	2	0	0	0	0	0	0	0	0	0	0	0	0	0
-3381/	1	**	1	6	1	0	0	0	0	0	0	0	0	0	0	0	0	0
-1107/	16	**	0	8	0	0	0	0	0	0	0	0	0	0	0	0	0	0
128/	1	**	8	0	0	0	0	0	0	1	0	0	0	0	0	0	0	0
1528/	1	**	7	1	0	0	0	0	1	0	0	0	0	0	0	0	0	0
1976/	1	**	7	0	1	0	0	1	0	0	0	0	0	0	0	0	0	0

UNCLASSIFIED

2256/	1	**	7	0	0	1	1	0	0	0	0	0	0	0	0	0	0	0
7812/	1	**	6	2	0	0	0	1	0	0	0	0	0	0	0	0	0	0
19320/	1	**	6	1	1	0	1	0	0	0	0	0	0	0	0	0	0	0
10360/	1	**	6	1	0	2	0	0	0	0	0	0	0	0	0	0	0	0
11228/	1	**	6	0	2	1	0	0	0	0	0	0	0	0	0	0	0	0
21952/	1	**	5	3	0	0	1	0	0	0	0	0	0	0	0	0	0	0
76944/	1	**	5	2	1	1	0	0	0	0	0	0	0	0	0	0	0	0
27944/	1	**	5	1	3	0	0	0	0	0	0	0	0	0	0	0	0	0
36610/	1	**	4	4	0	1	0	0	0	0	0	0	0	0	0	0	0	0
79940/	1	**	4	3	2	0	0	0	0	0	0	0	0	0	0	0	0	0
36624/	1	**	3	5	1	0	0	0	0	0	0	0	0	0	0	0	0	0
3000/	1	**	2	7	0	0	0	0	0	0	0	0	0	0	0	0	0	0
-255/	1	**	9	0	0	0	0	0	1	0	0	0	0	0	0	0	0	0
-3366/	1	**	8	1	0	0	0	1	0	0	0	0	0	0	0	0	0	0
-4185/	1	**	8	0	1	0	1	0	0	0	0	0	0	0	0	0	0	0
-2250/	1	**	8	0	0	2	0	0	0	0	0	0	0	0	0	0	0	0
-19008/	1	**	7	2	0	0	1	0	0	0	0	0	0	0	0	0	0	0
-44568/	1	**	7	1	1	1	0	0	0	0	0	0	0	0	0	0	0	0
-8100/	1	**	7	0	3	0	0	0	0	0	0	0	0	0	0	0	0	0
-59388/	1	**	6	3	0	1	0	0	0	0	0	0	0	0	0	0	0	0
-97398/	1	**	6	2	2	0	0	0	0	0	0	0	0	0	0	0	0	0
-111636/	1	**	5	4	1	0	0	0	0	0	0	0	0	0	0	0	0	0
-21357/	1	**	4	6	0	0	0	0	0	0	0	0	0	0	0	0	0	0
501/	1	**	10	0	0	0	0	1	0	0	0	0	0	0	0	0	0	0
7110/	1	**	9	1	0	0	1	0	0	0	0	0	0	0	0	0	0	0
8370/	1	**	9	0	1	1	0	0	0	0	0	0	0	0	0	0	0	0
43020/	1	**	8	2	0	1	0	0	0	0	0	0	0	0	0	0	0	0
47115/	1	**	8	1	2	0	0	0	0	0	0	0	0	0	0	0	0	0
144120/	1	**	7	3	1	0	0	0	0	0	0	0	0	0	0	0	0	0
57960/	1	**	6	5	0	0	0	0	0	0	0	0	0	0	0	0	0	0
-957/	1	**	11	0	0	0	1	0	0	0	0	0	0	0	0	0	0	0
-14223/	1	**	10	1	0	1	0	0	0	0	0	0	0	0	0	0	0	0
-15609/	2	**	10	0	2	0	0	0	0	0	0	0	0	0	0	0	0	0
-89595/	1	**	9	2	1	0	0	0	0	0	0	0	0	0	0	0	0	0
-154605/	2	**	8	4	0	0	0	0	0	0	0	0	0	0	0	0	0	0
1749/	1	**	12	0	0	1	0	0	0	0	0	0	0	0	0	0	0	0
26532/	1	**	11	1	1	0	0	0	0	0	0	0	0	0	0	0	0	0
56034/	1	**	10	3	0	0	0	0	0	0	0	0	0	0	0	0	0	0
-3003/	1	**	13	0	1	0	0	0	0	0	0	0	0	0	0	0	0	0
-45045/	2	**	12	2	0	0	0	0	0	0	0	0	0	0	0	0	0	0
4719/	1	**	14	1	0	0	0	0	0	0	0	0	0	0	0	0	0	0
-6435/	16	**	16	0	0	0	0	0	0	0	0	0	0	0	0	0	0	0

Security Classification

UNCLASSIFIED

DOCUMENT CONTROL DATA - R & D

(Security classification of title, body of abstract and indexing annotation must be entered when the overall report is classified)

1. ORIGINATING ACTIVITY *(Corporate author)* Naval Research Laboratory Washington, D.C. 20390	2a. REPORT SECURITY CLASSIFICATION Unclassified 2b. GROUP

3. REPORT TITLE

A MACHINE COMPUTATION OF THE GRUNSKY COEFFICIENTS OF SCHLICHT FUNCTIONS

4. DESCRIPTIVE NOTES *(Type of report and inclusive dates)*

An interim report on a continuing problem.

5. AUTHOR(S) *(First name, middle initial, last name)*

Allen R. Miller

6. REPORT DATE March 22, 1971	7a. TOTAL NO. OF PAGES 166	7b. NO. OF REFS 8
8a. CONTRACT OR GRANT NO. NRL Problem R06-28 b. PROJECT NO. Project X-3607, Task 60708 c. d.	9a. ORIGINATOR'S REPORT NUMBER(S) NRL Report 7225 9b. OTHER REPORT NO(S) *(Any other numbers that may be assigned this report)*	

10. DISTRIBUTION STATEMENT

Approved for public release; distribution is unlimited.

11. SUPPLEMENTARY NOTES	12. SPONSORING MILITARY ACTIVITY Department of the Navy (Naval Electronic Systems Command) Washington, D.C. 20360

13. ABSTRACT

If $f(z) = z + a_2z^2 + a_3z^3 + \cdots + a_nz^n + \cdots$ is analytic and univalent in the unit disk, then so is $[f(z^p)]^{1/p}$, $p = 2, 3, 4, \ldots$. The Grunsky coefficients $C_{nm}^{(p)}$ of $[f(z^p)]^{1/p}$ are defined implicitly by

$$\log \frac{[f(z^p)]^{1/p} - [f(\zeta^p)]^{1/p}}{z - \zeta} = \sum_{n,m=0}^{\infty} C_{nm}^{(p)} z^n \zeta^m .$$

In this work the coefficients $C_{nm}^{(1)}$, $1 \leqslant n \leqslant m \leqslant 9$ of $f(z)$ and the coefficients $C_{nm}^{(2)}$, $1 \leqslant n \leqslant m \leqslant 16$ of $[f(z^2)]^{1/2}$ are computed using a high-speed digital computer.

DD FORM 1 NOV 65 1473 (PAGE 1)

S/N 0101-807-6801

Security Classification

Security Classification

14. KEY WORDS	LINK A ROLE	LINK A WT	LINK B ROLE	LINK B WT	LINK C ROLE	LINK C WT
Univalent functions						
Schlicht functions						
Grunsky coefficients						
Grunsky inequalities						
Bieberbach conjecture						

DD FORM 1 NOV 65 1473 (BACK)
(PAGE 2)

Security Classification