Security Classification

DOCUMENT CONTROL DATA - R & D

(Security classification of title, body of abstract and indexing annotation must be entered when the overall report is classified)

1. ORIGINATING ACTIVITY *(Corporate author)*

Naval Research Laboratory
Washington, D.C. 20390

2a. REPORT SECURITY CLASSIFICATION
Unclassified

2b. GROUP

3. REPORT TITLE

STANDARD METHOD FOR THE 5/8 INCH DYNAMIC TEAR TEST

4. DESCRIPTIVE NOTES *(Type of report and inclusive dates)*
An interim report on one phase of the problem; work is continuing.

5. AUTHOR(S) *(First name, middle initial, last name)*

Eugene A. Lange, Peter P. Puzak, and Laurence A. Cooley

6. REPORT DATE
August 27, 1970

7a. TOTAL NO. OF PAGES
41

7b. NO. OF REFS
10

8a. CONTRACT OR GRANT NO.
NRL Problem M01-25

b. PROJECT NO.
RR 007-01-46-5432

c. SF 51-541-012-14628
Y-F 38.534.010.02.001

d. ENGNAV 70.1

9a. ORIGINATOR'S REPORT NUMBER(S)
NRL Report 7159

9b. OTHER REPORT NO(S) *(Any other numbers that may be assigned this report)*

10. DISTRIBUTION STATEMENT
This documen has been approved for public release and sale; its distribution is unlimited.

11. SUPPLEMENTARY NOTES

12. SPONSORING MILITARY ACTIVITY
Department of the Navy
(Office of Naval Research)
Arlington, Va. 22217

13. ABSTRACT

Fracture-safe design of structures depends critically upon the fracture toughness of the material, and remarkable advances in fracture mechanics technology have provided quantitative relationships between the mechanical aspects and the metallurgical aspects of fracture resistance. To exploit these scientific developments, the Dynamic Tear (DT) test has been under development at the Naval Research Laboratory, starting in 1960, to provide a practical, quantitative test method for fracture toughness measurement. DT energy has been used extensively for the characterization of fracture resistance of ferrous and nonferrous metals, and a direct translation to structural parameters has been developed using analysis diagrams for solving the complex analog relationship between the mechanical, metallurgical and structural aspects. A standard method for conducting the DT test using 5/8 in. thick specimens (5/8 DT) was developed to provide for uniform testing between laboratories. The standard 5/8 DT test can be used for specification purposes with 5/8 DT energy as dynamic performance criteria.

DD FORM 1 NOV 65 1473 (PAGE 1)

S/N 0101-807-6801

Security Classification

Security Classification

14. KEY WORDS	LINK A ROLE	LINK A WT	LINK B ROLE	LINK B WT	LINK C ROLE	LINK C WT
Dynamic tear test methods						
Performance criteria						
Fracture toughness						
Impact testing						
Dynamic tear energy						
Fracture mechanics						
Weld material fracture test						

DD FORM 1 NOV 65 1473 (BACK)
(PAGE 2)

Security Classification

CONTENTS

Abstract iii
Problem Status iii
Authorization. iii

INTRODUCTION. 1

1. SCOPE. 2

2. SUMMARY OF METHOD 3

3. SIGNIFICANCE OF TEST 6

4. PRECAUTIONS 6

4.1 Standard Specimens 6
4.2 Fracture Interruption 8

5. DEFINITIONS 8

5.1 Dynamic Tear Energy. 8

6. APPARATUS. 9

6.1 General Requirements 9
6.2 Impact Machines 9
6.3 Anvil Supports and Striking Tup 11
6.4 Construction of Hammer and Anvil 11
6.5 Impact Velocity and Size of Hammer 11

7. TEST SPECIMENS 14

7.1 Size of Specimen 14
7.2 Notch Detail 14
7.3 Procedure for Preparing the Type M Notch 14
7.4 Procedure for Electron Beam Welding of Crack Starter Weld. 21
7.5 Preparation of Weld Metal 5/8 DT Specimen. 24
7.6 Identification of 5/8 DT Test Specimens. 26
7.7 Orientation 27
7.8 Relation to Other Specimens 27
7.9 Specimen Cutting. 27

8. PROCEDURE 28

8.1 General 28
8.2 Measurement of Specimen Temperatures 28
8.3 Specimen Testing and Anvil Alignment. 30

9. REPORT 31

9.1 Contents 31

10. MATERIAL-QUALIFICATION TESTING 32

10.1 Use of DT Test 32
10.2 Single-Temperature Tests 32

REFERENCES 34

ABSTRACT

Fracture-safe design of structures depends critically upon the fracture toughness of the material, and remarkable advances in fracture mechanics technology have provided quantitative relationships between the mechanical aspects and the metallurgical aspects of fracture resistance. To exploit these scientific developments, the Dynamic Tear (DT) test has been under development at the Naval Research Laboratory, starting in 1960, to provide a practical, quantitative test method for fracture toughness measurement. DT energy has been used extensively for the characterization of fracture resistance of ferrous and nonferrous metals, and a direct translation to structural parameters has been developed using analysis diagrams for solving the complex analog relationship between the mechanical, metallurgical and structural aspects. A standard method for conducting the DT test using 5/8 in. thick specimens (5/8 DT) was developed to provide for uniform testing between laboratories. The standard 5/8 DT test can be used for specification purposes with 5/8 DT energy as dynamic performance criteria.

PROBLEM STATUS

This is an interim report on one phase of the problem; work on this and other phases is continuing.

AUTHORIZATION

NRL Problem M01-25
Projects RR 007-01-46-5432, SF 51-541-012-14628,
Y-F 38.534.010.02.001 and ENGNAV 70.1

Manuscript submitted July 15, 1970.

STANDARD METHOD FOR THE 5/8-INCH DYNAMIC TEAR TEST

INTRODUCTION

The Dynamic Tear (DT) test was evolved at the Naval Research Laboratory starting in 1960, and it has been used extensively for the characterization of fracture resistance of ferrous and nonferrous structural metals. The initial DT specimens were tested in a drop-weight machine, and the test method was defined as the "Drop-Weight Tear Test" (DWTT). Subsequently, pendulum machines with direct readout of the energy required to fracture the specimen were developed, and specimens of improved design with respect to crack-starter conditions were evolved. To reflect these evolutionary improvements, the name of the test method was changed to "Dynamic Tear" test in 1967. DT test facilities have been established at various research laboratories and production plants of major metal-producing companies in this country and abroad.

Structural metals manifest a variety of fracture modes, from square break (brittle) at elastic stress levels to full slant (ductile) requiring gross plastic loading. The basic aim of the DT test is the measurement of the intrinsic fracture propagation resistance under known conditions of mechanical constraint. The specimens incorporate deep, sharp notches or cracks and tests are conducted under dynamic loading. These conditions are essential for determining the worst (maximum) degree of mechanical constraint

that can be produced for the section size of interest.

When fractures occur under elastic stress conditions (brittle), the interpretation of DT energy to structural parameters of flaw size-stress can be accomplished by established linear-elastic fracture mechanics relationships. When fractures occur under gross plastic strain conditions, the DT energy is indicative of the amount of net section plastic strain that is associated with crack extension.

For engineering applications, including fracture-safe design considerations, interpretations of DT energy to flaw-size, stress-level relations for unstable fracture can be made directly by the use of analysis diagrams. For structural steels that feature a temperature induced transition in the service temperature range, the toe region of the DT energy curve can be indexed to the Fracture Analysis Diagram (FAD) [1]. The shelf region of DT energy versus temperature relationships and DT energy values for nontransition metals can be translated into structural parameters by the use of the Ratio Analysis Diagram (RAD) [1-8].

1. SCOPE

1.1 This report describes the method for conducting DT tests to determine the DT energy value of metal products using the standard 5/8 DT specimen. It provides a description of the apparatus, the dimensions and preparation of specimens, and details of the testing procedures.

1.2 This method can be used whenever the inquiry, contract, order or specification states that the metal product is subject to fracture resistance requirements as determined by the 5/8 DT test.

2. SUMMARY OF METHOD

2.1 The basic 5/8 DT test procedure, Fig. 1, consists of impacting a simply supported specimen having a notch (a in Fig. 1) on the tension side. There are two types of notches permitted in this method; one is a notch that is prepared by machining and the other is partially prepared by machining and uses a brittle crack-starter weld to provide a notch with a natural crack tip. The brittle crack-starter welds are prepared by diffusing a small amount of embrittling material in an electron-beam weld to form a highly crack sensitive region. Very little energy is required to initiate and propagate a crack through the brittle weld and into the test material. The crack-starter weld specimen is used when the specified sharp tip on the machined notch cannot readily be obtained; for example, in ultrahigh strength metals the hardness level of the test material dulls the edge of the knife. The 5/8 DT specimens are fractured with pendulum or drop-weight machines, and the total energy for fracture is recorded. Representative 5/8 DT energy versus temperature-transition curves for two steels are shown in Fig. 2 to illustrate that both specimens

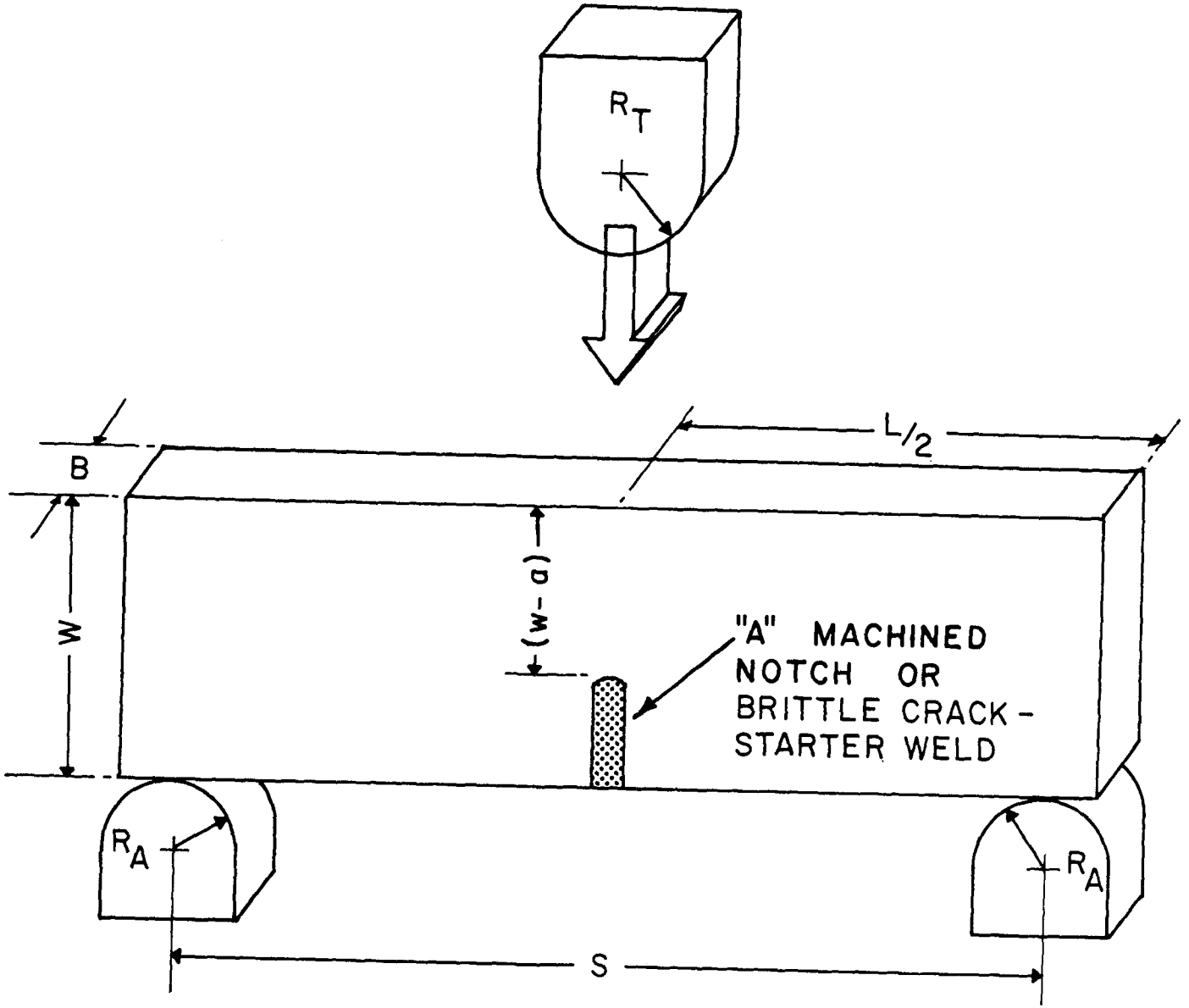

Fig. 1 - Diagram of basic Dynamic Tear test setup (Parameters are defined in Tables 1 and 2.)

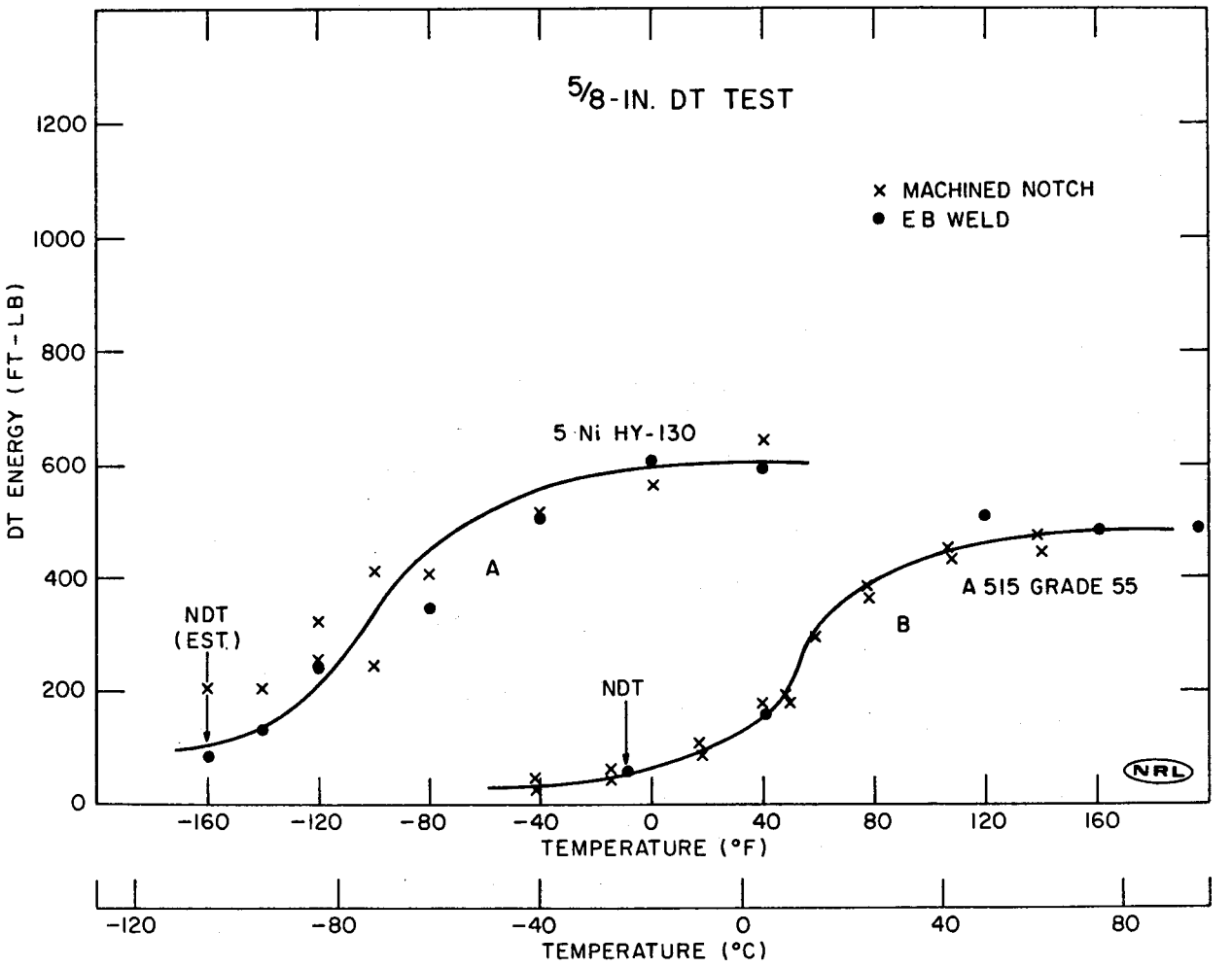

Fig. 2 - Representative 5/8 DT energy versus temperature transition curves for two steels illustrating the close correspondence between 5/8 DT energy values obtained with machine notched or crack-starter weld specimens. Note the location of NDT temperature at the toe of the DT energy curves and the sharp rise in fracture resistance above the NDT temperature.

provide comparable characterization of fracture toughness. Translation of a 5/8 DT energy value into a 1-in. DT energy value can be accomplished with a simple proportionality factor. The correlation between the upper-shelf 5/8 DT and DT energy values from 1 in. specimens for various steels is shown in Fig. 3.

3. SIGNIFICANCE OF TEST

The significance of the DT test derives from the exactly defined mechanical constraint conditions imposed on a sample of the metal of interest. The DT energy value is a measure of fracture resistance under the most severe, mechanical constraint condition that can be imposed for the specified section size. A sufficiently long fracture path is provided so that a measure of intrinsic fracture resistance is obtained with due recognition of the "resistance factor" to crack extension. This feature is essential for proper evaluation of the fracture resistance of metals which exceed unstable plane strain fracture toughness levels.

4. PRECAUTIONS

4.1 Standard Specimens

This method establishes standard 5/8 DT test specimens and conditions to determine the 5/8 DT energy value of a given metal sample for a specific temperature. The use of standard specimens with nonstandard test conditions or the use of nonstandard specimens shall not be allowed under this specification.

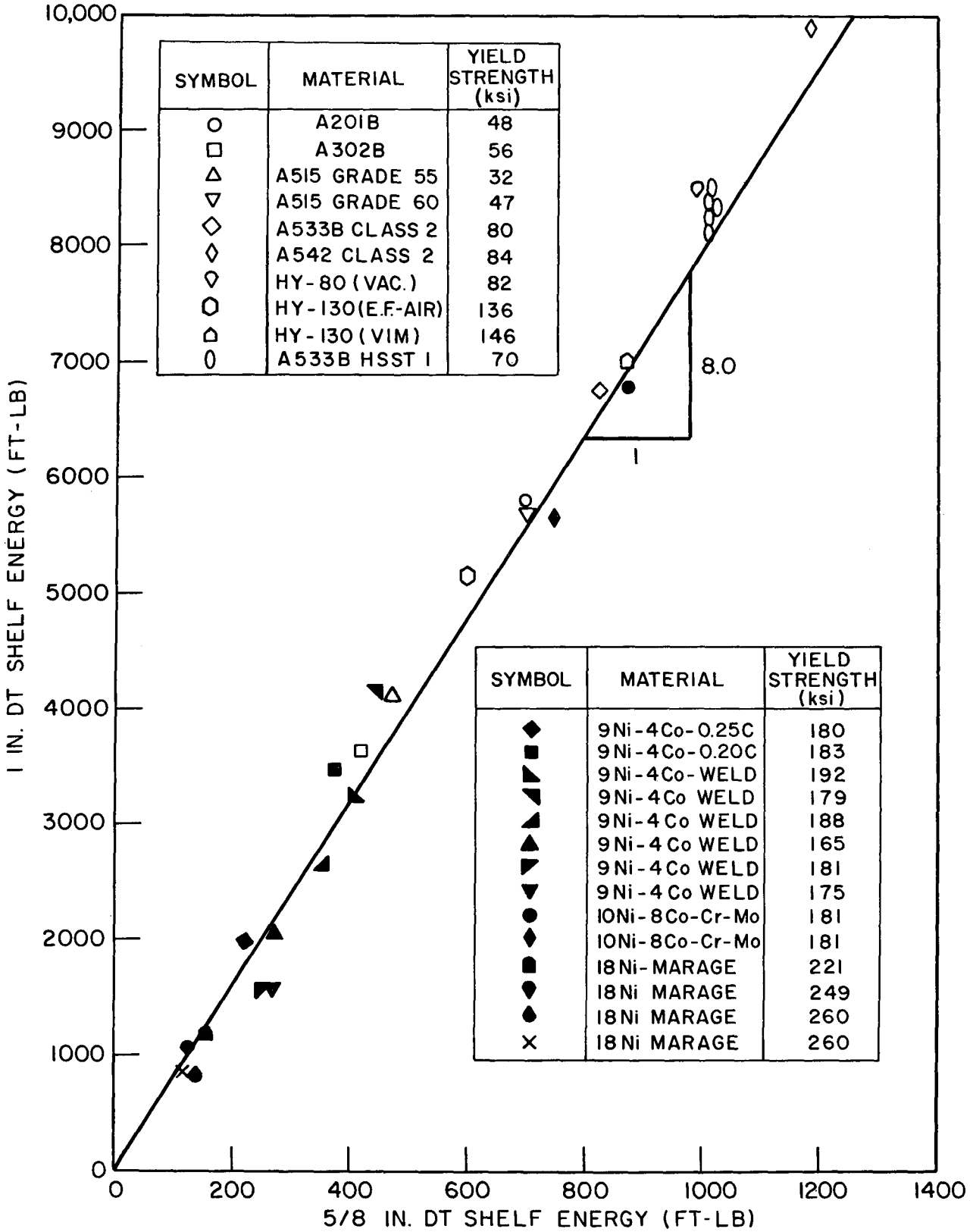

Fig. 3 - Correlation between 5/8 DT and 1-in. DT upper shelf energy values for a broad range of steels

4.2 Fracture Interruption

If the crack-starter action of an electron-beam welded specimen is interrupted within the brittle weld due to a gas pocket or at the interface due to a weld crack, the recorded DT energy value may be higher than that indicative of the true fracture resistance level for the material. After the completion of each DT test, the specimen shall be examined, and the test shall be considered not valid upon visual evidence that an interruption occurred.

5. DEFINITIONS

5.1 Dynamic Tear Energy

5.1.1 The 5/8 DT energy is the total energy required to fracture a standard 5/8 DT specimen when tested according to the provisions of this method. The average 5/8 DT energy shall be based upon a minimum of two specimens, or more if required by the purchaser or if retest specimens are required.

5.1.2 With pendulum type machines, the 5/8 DT energy value recorded is the difference between the initial and the final potential energies of the pendulum [5].

5.1.3 With drop-weight type machines, the 5/8 DT energy value recorded is the energy value calculated from the force-time record of a calibrated striker on the hammer or the difference between the initial potential energy of the weight and the final energy of weight as determined by a calibrated energy absorption system.

6. APPARATUS

6.1 General Requirements

Any pendulum-type machine or drop-weight machine with sufficient capacity to fracture completely a standard 5/8 DT specimen with one blow and an energy measuring system calibrated within an accuracy of ±10% shall be satisfactory equipment for conducting 5/8 DT tests. The principal components of the machines are free-falling weights, and a rigidly supported anvil that provides for the loading of the rectangular specimen as a simple three-point loaded beam.

6.2 Impact Machines

6.2.1 Single-Pendulum Machine

Single pendulum machines are commonly used for DT testing. A capacity of 2000 ft-lbs (280 kgf-m) is adequate for conducting 5/8 DT tests on all metals.

6.2.2 Double-Pendulum Machine

A double pendulum machine designed for the 5/8 DT specimen is shown in Fig. 4. Double pendulum machines have been used to minimize shocks transmitted to support systems and to provide a compact testing machine of 2000 ft-lb (280 kgf-m) capacity. Blueprint drawings showing assembly and details for the double-pendulum machine are available upon request*.

---

*Naval Research Laboratory, Code 6380, Washington, D. C. 20390

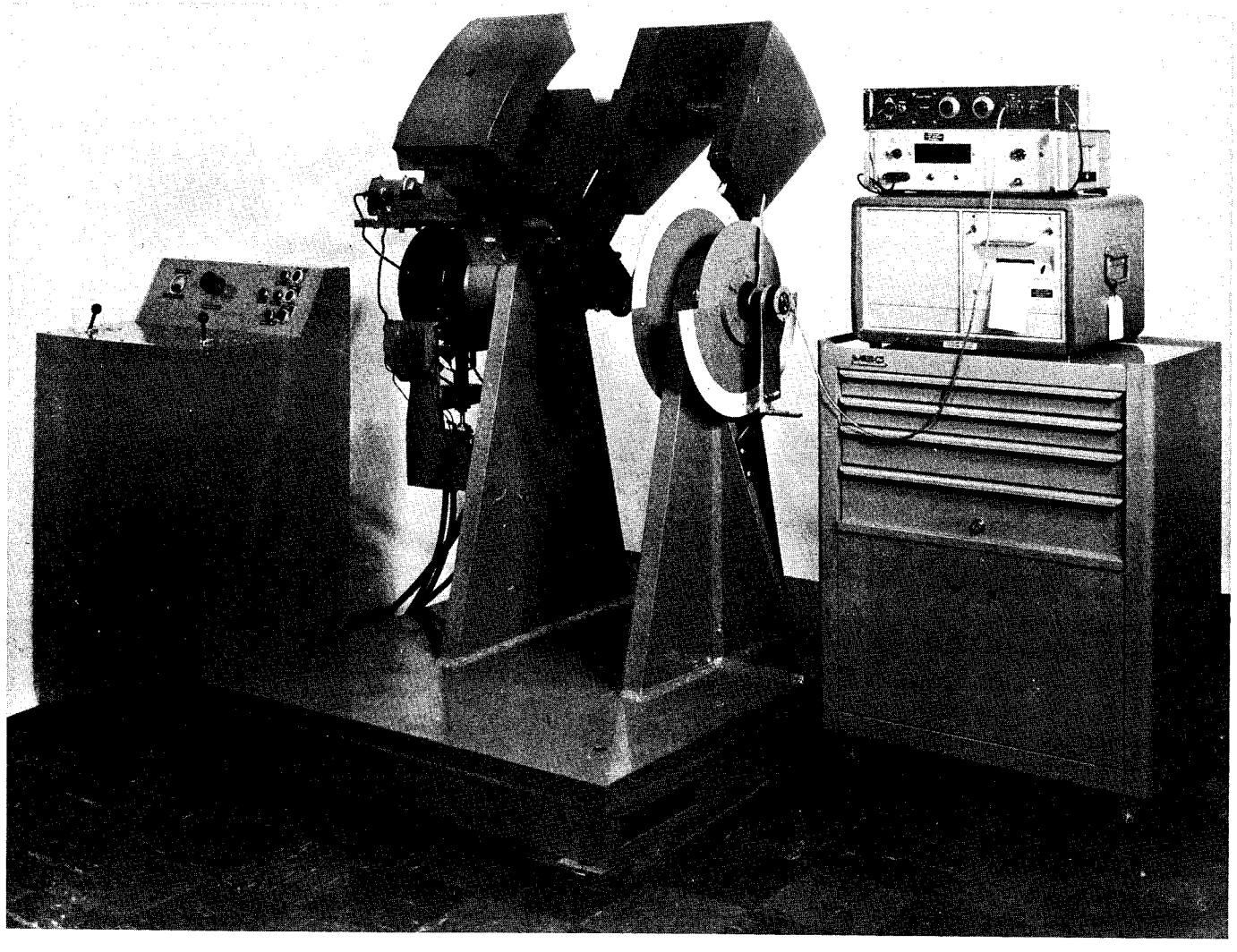

Fig. 4 - Double-pendulum machine of 2000 ft-lb (280 kgf-m) capacity used for testing 5/8 DT specimens

6.2.3 Drop-Weight Machine

Figure 5 shows a vertical drop-weight machine with a 250 lb (11.3 kg) weight used for 5/8 DT testing. With an additional hammer and anvil this design can be readily transformed to conduct the DWT-NDT test (ASTM E208) [9].

6.3 Anvil Supports and Striking Tup

6.3.1 The anvil supports and striking tup for 5/8 DT tests are shown schematically in Fig. 1. The defined dimensions for these parts shall conform to the values given in Table 1.

6.3.2 The anvil supports and striking tup shall be steel, hardened to a minimum hardness value of Rockwell C48. The dimensions of the test specimens shown schematically in Fig. 1 are specified in paragraph 7.1.

6.4 Construction of Hammer and Anvil

Construction of the hammer and anvil shall allow rotation of the specimen halves around the anvil support without interference with the sides of the hammer. Clearance between the sides of the hammer and the anvil shall not be less than 2.0 in. (51 mm).

6.5 Impact Velocity and Size of Hammer

The limits of vertical heights of the hammer are set to achieve the maximum effect of strain rate on the fracture resistance of the test material without introducing excessive error due to inertial and vibrational aspects of

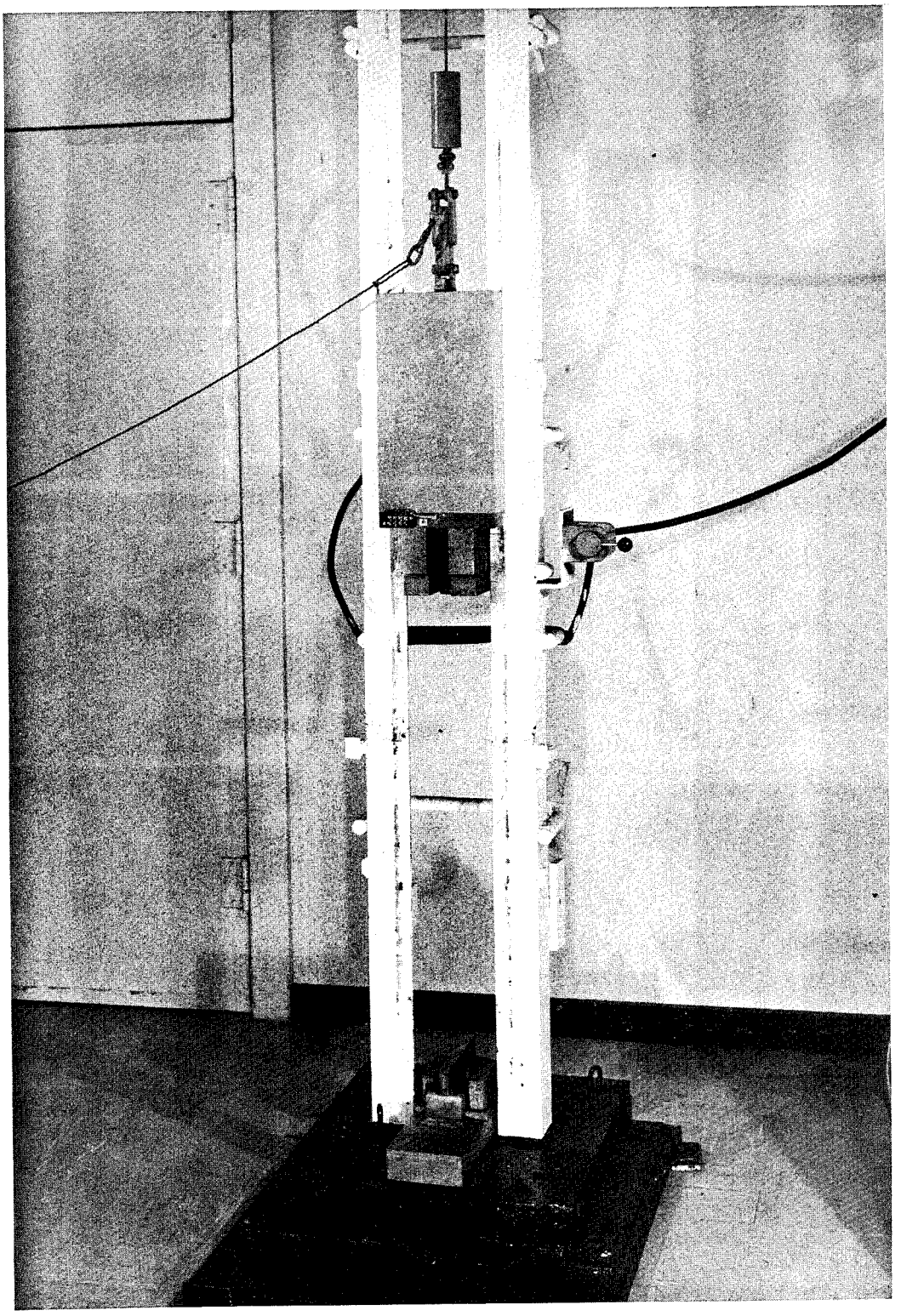

Fig. 5 - Drop-weight machine of 2500 ft-lb (350 kgf-m) capacity for testing 5/8 DT specimens

TABLE 1

REQUIREMENTS FOR STRIKING TUP AND ANVIL SUPPORTS

Parameter	Units	Dimension	Tolerance
Radius of Striking Tup, R_T	in.	0.5	±1/32
	mm	12.7	±0.8
Radius of Anvil Supports, R_A	in.	0.5	±1/32
	mm	12.7	±0.8
Support Span, S	in.	6.5	±1/32
	mm	165.0	±0.8

the impact test. The weight of the hammer for a specific machine is dependent upon the desired capacity of the machine. The impact velocity of the machine shall be not less than 16 ft/sec (4.9 m/sec) nor more than 28 ft/sec (8.5 m/sec). This impact velocity range corresponds to vertical drop heights of 4 ft (1.2 m) to 12 ft (3.6m). An effective capacity for conducting 5/8 DT tests is 2000 ft-lb (280 kgf-m).

7. TEST SPECIMENS

7.1 Size of Specimen

A schematic of the 5/8 DT specimen is shown in Fig. 1. The tolerances for the dimensions of the 5/8 DT specimen blank shall conform to the values given in Table 2.

7.2 Notch Detail

7.2.1 Machined Notch, Type M

The Type M specimen shall be considered as the primary 5/8 DT specimen. The notch depth is machined to provide a fracture path in test material of 1-1/8 in. (28.5 mm); the small extension required for notch sharpening is considered a portion of the nominal net section. Details of the notch for the Type M specimen are shown in Fig. 6 (a) and for the Type C specimen in Fig. 6 (b). The tolerances for the notch dimensions are given in Table 3.

7.3 Procedure for Preparing the Type M Notch

7.3.1 Preparation of a Type M notch in 5/8 DT specimens starts with rough machining the slit with a slitting

TABLE 2

DIMENSION OF 5/8 DT SPECIMEN BLANK

Parameter	Units	Dimension	Tolerance
Length, L	in.	7.125	±0.125
	mm	181.0	±3.2
Width, W	in.	1.6	±0.10
	mm	38.0	±2.5
Thickness, B	in.	0.625	±0.033
	mm	15.8	±0.8
Notch or crack starter weld depth, a	in. mm	0.375 nom. 9.5 nom.	

TABLE 3

DIMENSIONS OF TYPE M AND TYPE C NOTCHES

Parameter	Units	Dimension	Tolerance
Net Width, (W-a)	in. mm	1.125 28.5	±0.020 ±0.5
Machined Notch Width N (Edge to centerline of apex)	in. mm	0.0312 0.79	±0.005 ±0.13
Machined Notch Root Angle, N_{α}	degrees	60	±2
Machined Notch Root Radius, N_r	in. mm	.005 0.13	Max. Max.
Pressed Tip Depth, N_{td}	in. mm	.008 .2	±0.003 ±0.08
Pressed Tip Angle, $N_{t\alpha}$	degrees	45	Max.
Pressed Tip Root Radius, N_{tr}	in. mm	.001 .025	Max. Max.

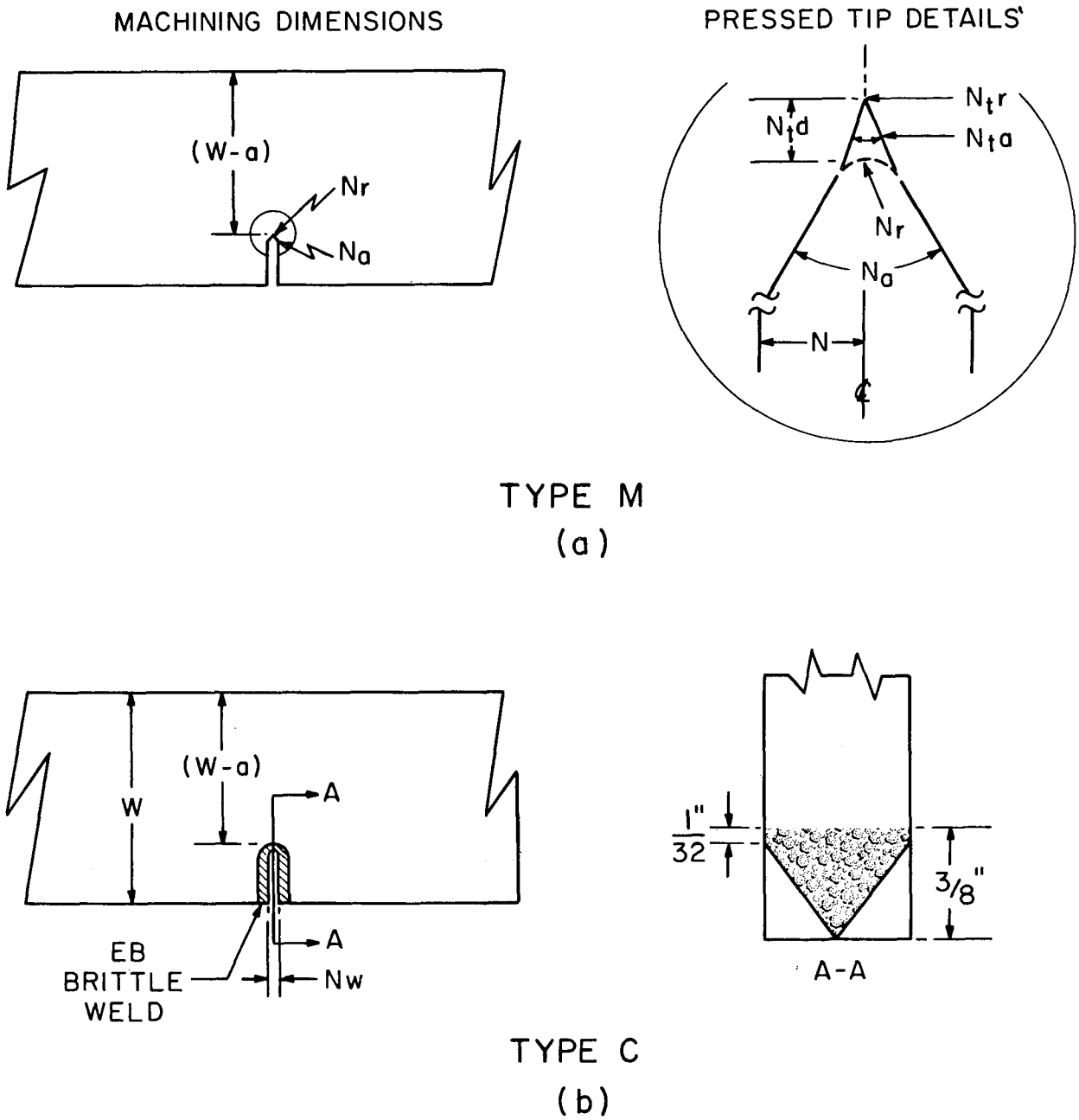

Fig. 6 - Details of notches for 5/8 DT specimens: (a) Type M, machined notch; (b) Type C, crack-starter electron beam weld notch

saw to the depth of the straight sided portion of the notch [5/16 in., (8mm)], Fig. 7. The angular apex portion and particularly the final cut on the root radius is completed then with a precisely ground saw or cutter to ensure a final root radius less than 0.005 in. (0.18 mm). These machining operations can be performed simultaneously for a group of specimens.

7.3.2 Pressing the sharp tip on the machined notch is performed with individual specimens. A hardened blade of tool steel, 60 R_C, 11/16 in. (17.5 mm) wide and 0.050 in. (1.27 mm) thick is ground symmetrically to a sharp edge with an included angle of 40°, Fig. 7. Any loading device with sufficient capacity to press the knife into the specimen to the depth prescribed in Table 3 can be used. A setup for performing this operation using a hand operated hydraulic press is shown in Fig. 8. The sequence of the operation is as follows: (1) the specimen is positioned on the anvil, (2) the piston is advanced to provide contact between the knife and the head of the press, (3) the dial micrometer is set at zero, and (4) sufficient pressure is applied to press the knife into the specimen for the specified distance. This requires a force of approximately 4,000 lbs (1,800 kg) for mild steel specimens and 2,500 lbs (1,100 kg) for aluminum specimens.

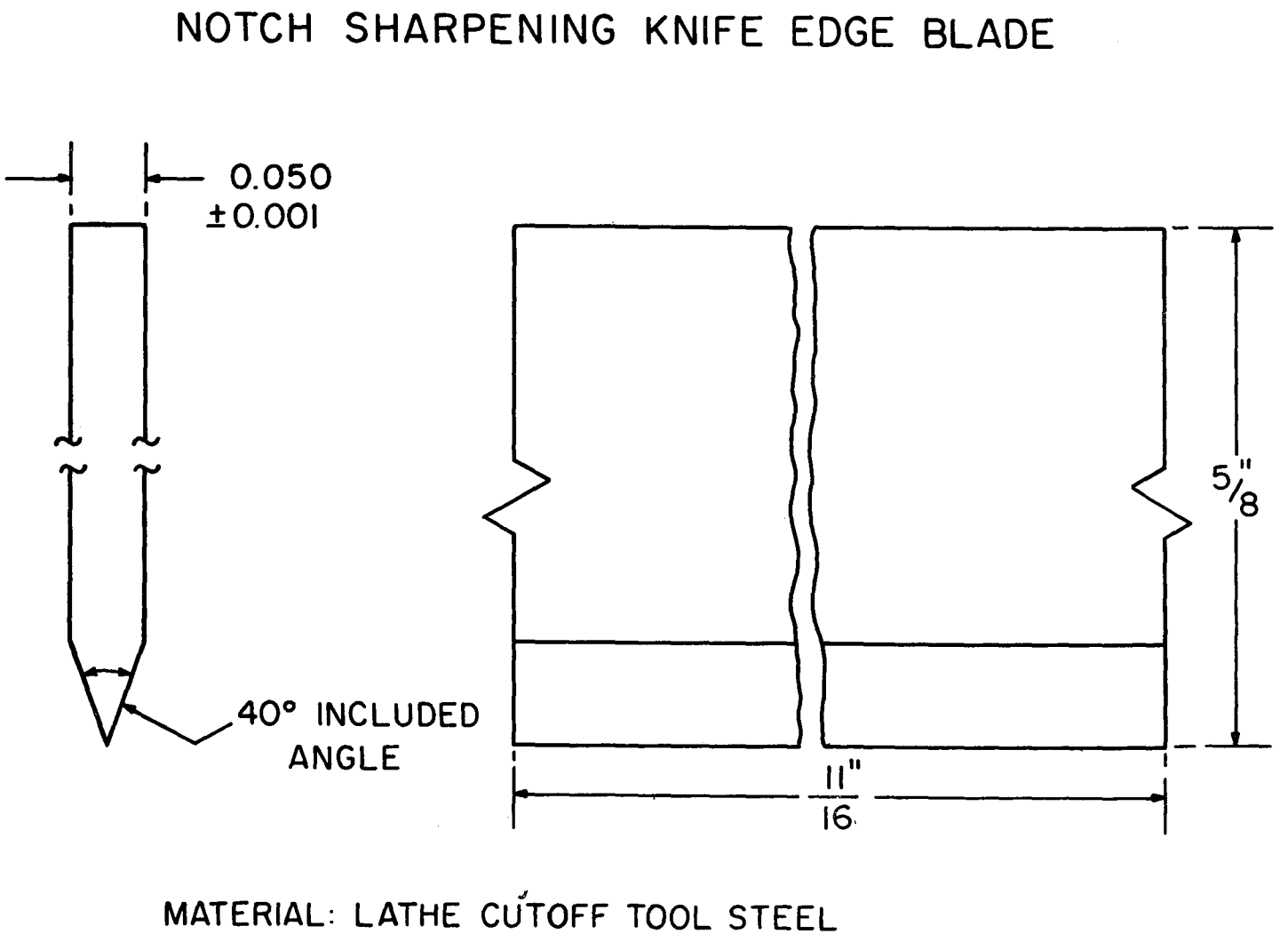

Fig. 7 - Knife blade used to sharpen tip of machined notch

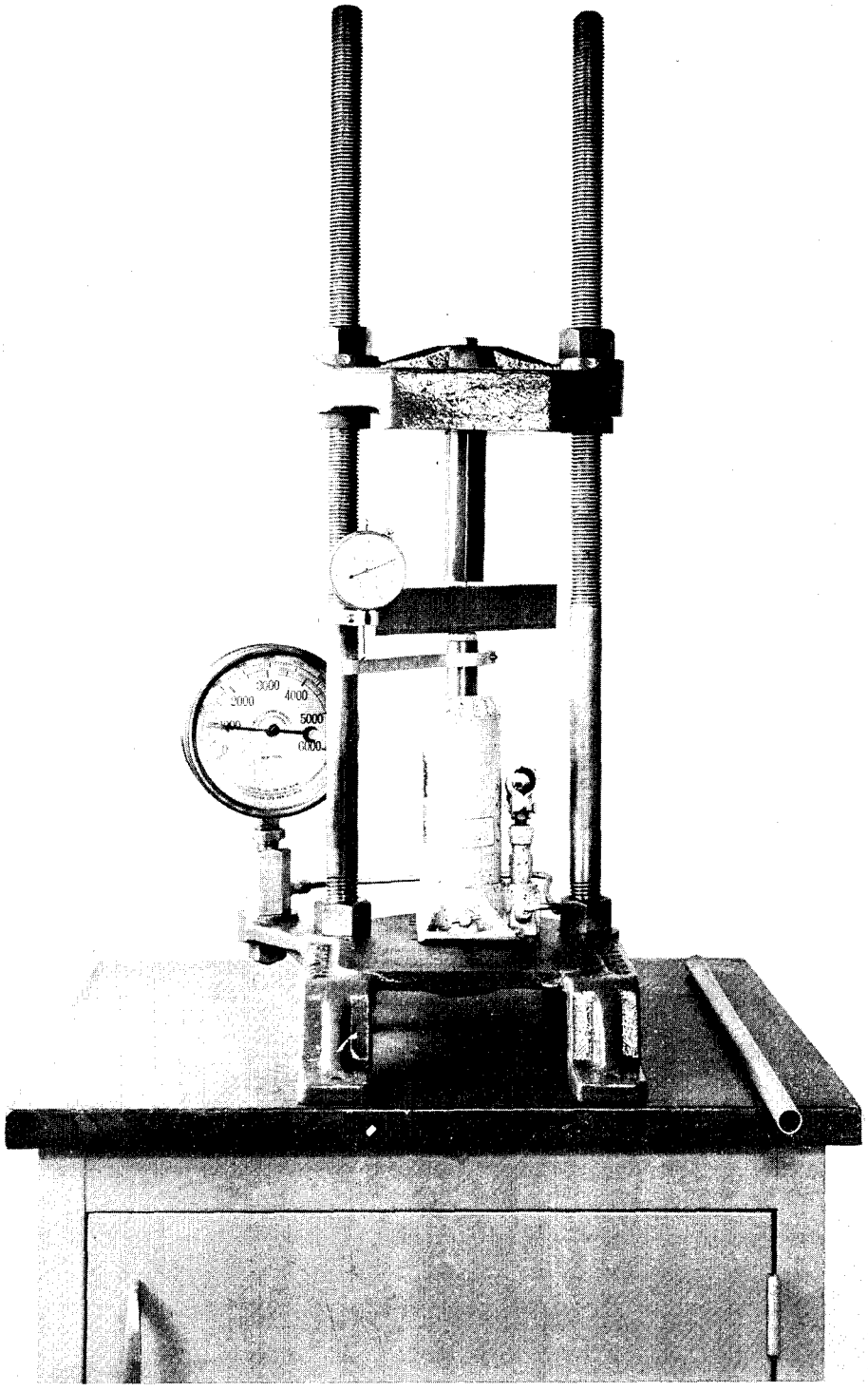

Fig. 8 - Hand operated hydraulic press for pressing a sharp tip on a machined notch. Note dial gage micrometer device to indicate depth of penetration

7.3.3 After each notch is sharpened, the knife blade is examined to detect excessive dulling of the edge. Normally, 15 to 20 specimens of steel with yield strength of 50 ksi (35 kg/mm^2) can be processed before a knife requires a new edge.

7.4 Procedure for Electron Beam Welding of Crack Starter Weld

7.4.1 Preparation of the 5/8 DT specimen for the EB crack starter weld requires machining a shallow groove on the tension side of the DT specimen as shown in Fig. 9. One method for machining the groove is as follows. The tension side of the specimen is sprayed with marking fluid, and a line perpendicular to the specimen sides is scribed at mid-length of the specimen. Six or more specimens are aligned in a vise. A 0.050 in. deep groove is then cut across the tension side of the specimen using a 0.050 in. wide, square-bottom, parting tool. A wire of an alloy known to embrittle the test material is placed in the machined groove.

7.4.2 Six or more grooved specimen blanks are aligned and clamped together for EB welding. For steel specimens, an unalloyed titanium wire (0.063 in. diameter) is placed in the machined groove and upset by light hammering to hold it securely in place. This ensures that a uniform distribution of embrittling alloy along the length of the groove is obtained. If the wire does not make good contact with the base metal, there is a tendency for the electron beam to premelt and eject the wire from the weld zone.

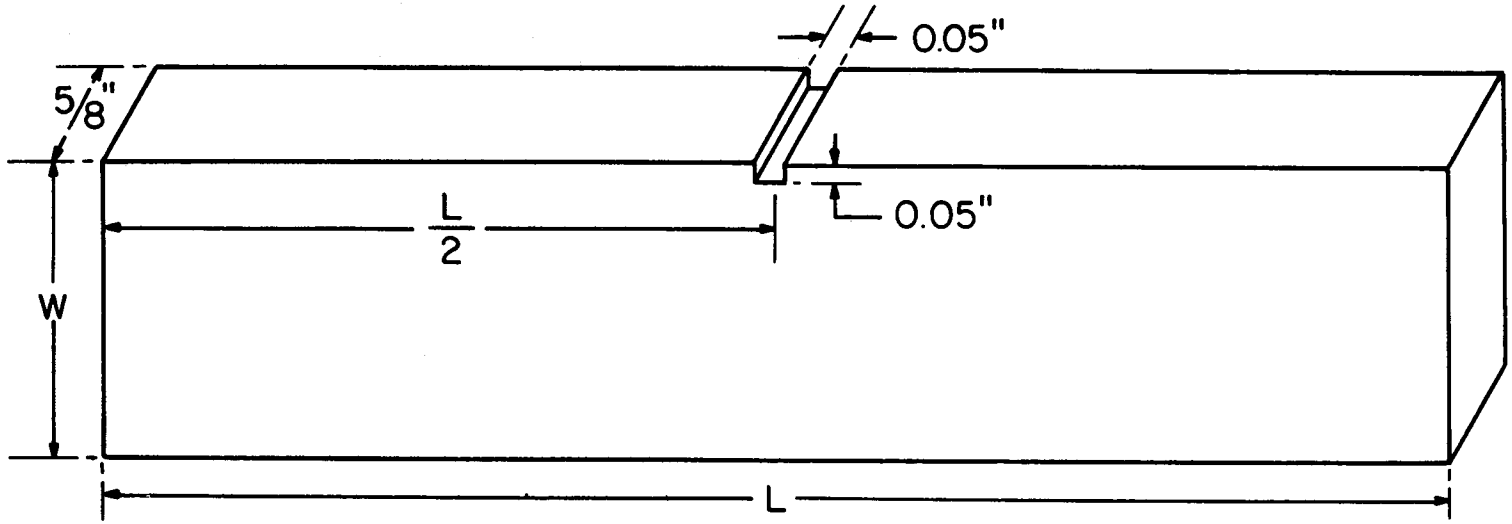

Fig. 9 - Preparation of 5/8 DT specimen for EB welding of crack-starter weld

7.4.3 Tin or phosphor bronze wire (0.063 in. diameter) is used to embrittle aluminum specimens, and iron or stainless steel wire is employed with titanium specimens.

7.4.4 The penetration of the EB weld is primarily dependent upon the power level, the focus or diameter of the beam, and the traverse speed. Typical machine settings to obtain a 3/8 in. penetration for a gun-to-work distance of 4-1/2 in., with sharp focus on the top surface of the work piece, are as follows:

Metal	Applied Voltage (kv)	Traverse (in./min.)	[m/min.]	EB Current (ma)
Steel	30	50	[1.3]	153
Titanium	30	50	[1.3]	99
Aluminum	30	50	[1.3]	72

A trial run should be made on each alloy to obtain the correct settings that provide the required penetration with a minimum of spatter. Higher voltage and slower traverse speeds increase the penetration.

7.4.5 Notching the Crack-Starter Weld. The sides of the crack-starter weld are notched in a triangular pattern to assist initiation of the crack in the brittle weld. The dimensions of the triangular notch are given in Fig. 6(b). The side notches are cut with a 1/16 in. (1.5mm) thick mechanical or abrasive saw with the specimen held at the appropriate angle in a vise to produce the triangular shaped

notch. The only tolerance provided for this notching procedure is that the notch be centered on the EB weld and that the side notches do not extend beyond the end of the EB weld into the test material. A scribed line, marked 1/32 in. (0.8mm) from the end of the EB weld, can be used as a guide to terminate the cutting of the side notches.

7.5 Preparation of Weld Metal 5/8 DT Specimen

7.5.1 The 5/8 DT test procedure provides a method for assessing the fracture toughness characteristics of weld metal. The weld-metal 5/8 DT specimen shall be sawed from a given length of weldment fabricated with the specific welding procedures, welding process, electrodes, and plate alloys being qualified. The minimum width of the weldment shall be 8 in. (200 mm). The 5/8 DT test weldment shall be a prolongation of the weldment from which other mechanical test samples (tension, bend test, etc.) are taken. The weld joint geometry shall be single V for 1 in. (25mm) thick plate and double V geometry for 2 in. (50mm) thick plate as shown in Fig. 10.

7.5.2 The weld-metal 5/8 DT test samples shall be located as close to the weld crown as possible in order to provide a width of weld metal on both sides of the specimen to contain all of the fracture surface in the weld deposit. An integrated 5/8 DT energy which may not be indicative of the intrinsic fracture toughness of the weld metal is obtained

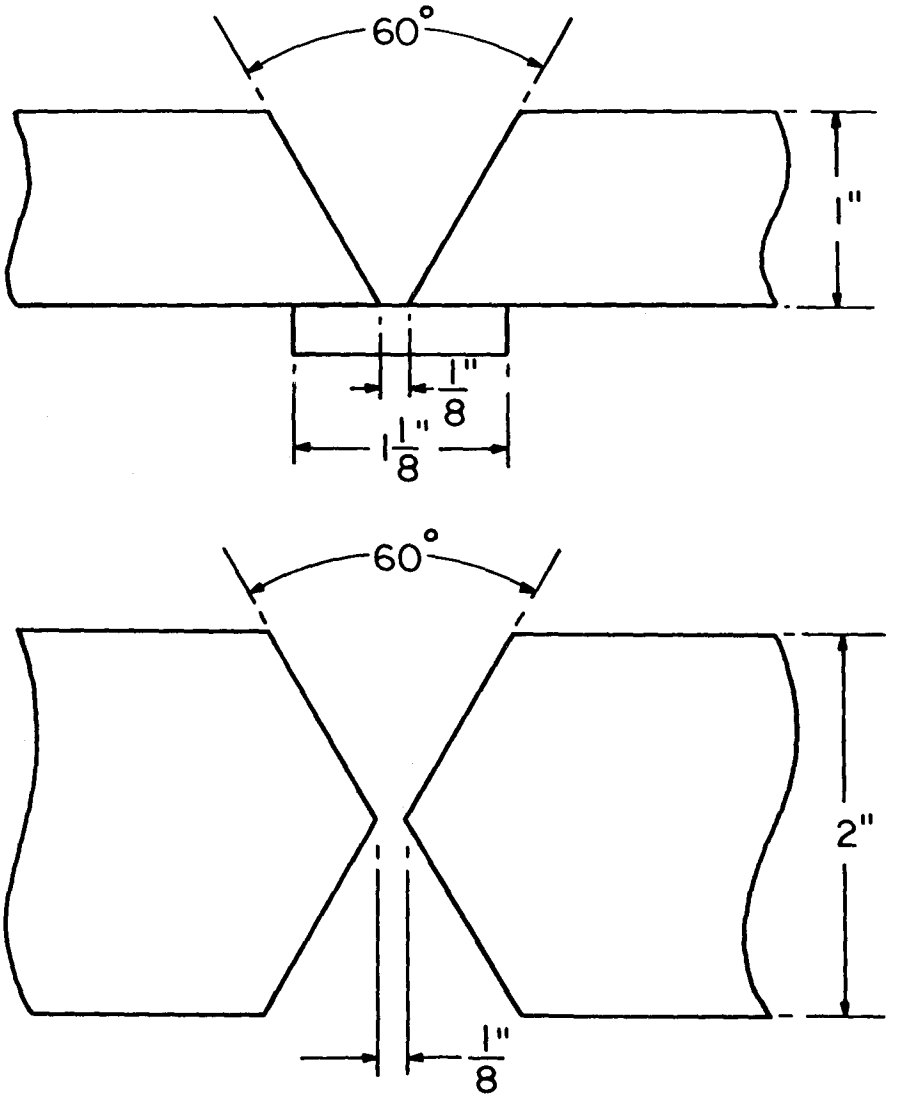

Fig. 10 - Suitable joint geometries for weld metal 5/8 DT specimens

when the fracture surface involves weld metal heat-affected zone, and prime plate areas. The weld crown and a minimum of the plate surface shall be machined flat. All other cutting and/or machining to the 5/8 in. (16mm) thickness shall be performed from the bottom side of 1 in. (25mm) weldments. For 2 in. (50mm) thick weldments, 5/8 DT specimens may be machined as described above using blanks removed adjacent to both the top and bottom weld crown.

7.5.3 The notch and/or crack starter weld portion of a weld-metal 5/8 DT specimen is located on the central axis of the test weld. Preparation and techniques for notching or EB welding of the crack-starter weld are the same as those described for plate-metal 5/8 DT specimens.

7.6 Identification of 5/8 DT Test Specimens

7.6.1 All sample material and specimens removed from a given plate shall be marked to identify their particular source (heat number, slab number, etc.). A simple identification system shall be used in conjunction with an itemized table to record all pertinent information.

7.6.2 Weld-metal 5/8 DT test specimens shall be marked to identify the heat and lot number of the welding electrode, the welding process and procedures, the preheat and interpass temperatures employed, joint geometry, and prime plate metal used for the qualifying weldment.

7.7 Orientation

For the low-temperature toe region (brittle) of the DT energy versus temperature transition curve, the DT test is insensitive to orientation with respect to rolling or forging direction. However, in the transition temperature range and at the upper shelf (gross plastic strain) temperatures, the DT test can be highly sensitive to orientation depending on the anisotropy of the material being evaluated. Therefore, unless otherwise agreed to, all 5/8 DT specimens specified for plate products by the purchaser shall be oriented so that the fracture propagates in the principal rolling direction of the plate (i.e., the ASTM WR orientation) [10].

7.8 Relation to Other Specimens

Unless otherwise specified by the purchaser, the 5/8 DT specimens shall be removed from material at positions adjacent to the location of other required test specimens (for example, tensile test specimens). For products receiving a quenched and tempered heat treatment, the side of the 5/8 DT specimen containing the notch shall be nearest to and a minimum of three plate thicknesses from the as-heat-treated end of the plate.

7.9 Specimen Cutting

The specimen blank may be saw cut to the dimension tolerances shown in Table 2. All faces of the specimens associated with the fracture must be a minimum of 1 in. (25 mm) from any flame-cut surface. The finished specimen may be tested with saw cut surfaces if all width to thickness

angles are maintained normal within ±1°. The end surfaces of the specimens may be flame cut.

8. PROCEDURE

8.1 General

Conduct the 5/8 DT test by placing a specimen in a heating or cooling device until it is at the desired temperature. Then place and align it on the anvil so it will be struck squarely by the hammer within the time specified in 8.3.2. Care must be taken to ensure the proper measurement of the specimen temperature and the alignment of the specimen on the anvil. Using adequate auxiliary equipment and following a definite procedure will aid in making a valid test.

8.2 Measurement of Specimen Temperatures

The entire test specimen shall be at a known and uniform temperature during the test. It can be assumed that if the specimen is fully immersed in an agitated, liquid bath at a known constant temperature and separated from adjacent specimens by a minimum of 1 in. (25 mm) for a period of at least 20 minutes, the specimen temperature is the same as the bath temperature. If a gas heat-transfer medium is used, the required minimum holding time is increased to 40 minutes. If it can be shown by appropriate test techniques, such as using a thermocouple buried in the center of a dummy test specimen, that specimen equilibrium

temperatures can be developed in a shorter period, the specimen-holding period can be reduced, provided prior approval is obtained from the purchaser. The constant-temperature baths or ovens may be of any type that will heat or cool the specimens to a known and uniform temperature.

8.2.1 Measure the bath temperature by a device with calibration known to ±2°F or ±1°C. One convenient method for bath-temperature measurement is to use a bare thermocouple connected to an automatic recorder.

8.2.2 A deep, well-insulated container, holding from 2 to 5 gallons (8 to 20 liters) of a suitable heat-transfer liquid, will maintain a given temperature for the required specimen-holding period with minor corrections. By immersing an open basket of cracked dry ice or an electrical heater in the bath, the bath temperature can be precisely adjusted. Specimens placed horizontally in the bath should be laid on a screen or perforated platform at least 1 in. (25 mm) from the bottom. If several specimens are placed in one bath, they should be spaced a minimum of 1 in. (25 mm) apart to ensure an adequate flow of heat-transfer liquid around each specimen. Effective agitation can be provided with oscillating or rotational type mixers.

8.2.3 For reasons of convenience, economy, and safety, several different heat-transfer liquid baths may be used to cover the spectrum of test temperatures. A liquid

bath containing 68% ethylene-glycol and 32% water is suitable for test temperatures ranging from -60° to 220°F (-50° to 100°C). A liquid bath of trichloromonofluoromethane (Refrigerant 11) can be used to cover test temperatures ranging from -120° to -40°F (-84° to -40°C). For test temperatures of -100°F (-70°C) and lower, liquid-nitrogen cooling of the heat-transfer liquid bath is required. With adequate ventilation, an isopentane liquid bath can be used for test temperatures ranging from -240° to -100°F (-150° to -70°C); however, caution is recommended because of the flammability of isopentane vapors.

8.3 Specimen Testing and Anvil Alignment

8.3.1 Any convenient procedure may be used to remove a specimen from the constant-temperature bath and transfer it to the test machine, provided it does not affect adversely the control of specimen temperature. Tongs, if used, shall be kept in the constant-temperature bath to maintain a temperature equal to the specimen temperature. For conventional test temperatures, transfer and alignment of a specimen can be accomplished by hand, using heavy rubber gloves and grasping the specimen away from the fracture area.

8.3.2 The specimen shall be broken within 10 seconds after it has been removed from the constant-temperature medium or temperature control is presumed to be lost, and the specimen shall be returned to the medium for a minimum additional holding time of 10 minutes.

8.3.3 To obtain a valid test, the specimen, anvil, and pendulum shall be properly aligned so the specimen is broken under the following conditions:

8.3.3.1 The specimen shall be centered on the anvil, and the ends shall contact or rest on the anvil supports.

8.3.3.2 The tup of the pendulum shall strike within ±0.032 in. (±0.8 mm) of a line drawn normal to the tension surface of the specimen and passing through the centerline of the notch or crack-starter weld.

8.3.3.3 The specimen sides and ends shall be free from any interference during the test.

9. REPORT

9.1 Contents

The report shall include the following information:

9.1.1 Type of material (steel, titanium, aluminum, etc.), nominal alloy content, and heat treatment condition;

9.1.2 Mill processing practices including melting and deoxidation practices, relative degree of cross-rolling for plate products, and processing information for welding electrodes;

9.1.3 For plate material, the size and heat number of the parent melt and subsequent special remelts, if any, and plate number, etc.;

9.1.4 For DT test of weld metal, the heat and lot number, the electrode type, the welding process, welding procedures, etc.;

9.1.5 Identification, orientation, and location of DT test specimens;

9.1.6 Test conditions, including pendulum weight, drop height, and test temperatures;

9.1.7 Results of the test for each specimen (including retest specimens, if any) and the average 5/8 DT energy for the product involved;

9.1.8 Deviations, if any, from this test method.

10. MATERIAL-QUALIFICATION TESTING

10.1 Use of DT Test

On the basis of refinement of structural design, fabrication quality, expected service conditions, and material characteristics, a 5/8 DT energy value and test temperature can be selected as the performance criteria for a product specification.

10.2 Single-temperature Tests

Specification tests conducted at a given test temperature, on a go, no-go basis, shall require that a minimum of two DT specimens be tested. Both DT specimens thus tested shall exhibit energy values in excess of the minimum specified in the product specification.

10.2.1 If the DT energy value of one of the two specimens falls below the minimum specified DT energy, a retest of two additional specimens shall be required. Both retest specimens shall exhibit energy values in excess of the minimum specified value in order to obtain a valid average

DT energy of all four specimens. If either of the energy values from the retest specimens fall below the minimum specified value, the heat shall be considered unsatisfactory.

10.2.2 If the DT energy values of both specimens noted in paragraph 10.2 above, fall below the minimum specified DT energy of the product specification, retests shall not be allowed and the heat shall be considered unacceptable.

REFERENCES:

1. Pellini, W. S. and Loss, F. J., "Integration of Metallurgical and Fracture Mechanics Concepts of Transition Temperature Factors Relating to Fracture-Safe Design for Structural Steels," NRL Report 6900, 22 April 1969; also WRC Bulletin 141, June 1969

2. Pellini, W. S., "Evolution of Engineering Principles for Fracture-Safe Design of Steel Structures," NRL Report 6957, 23 September 1969

3. Pellini, W. S., "Advances in Fracture Toughness Characterization Procedures and in Quantitative Interpretations to Fracture-Safe Design for Structural Steels," NRL Report 6713, 3 April 1968; also WRC Bulletin 130, May 1968

4. Goode, R. J., Judy, Jr., R. W. and Huber, R. W., "Procedures for Fracture Toughness Characterization and Interpretations to Failure-Safe Design for Structural Titanium Alloys," NRL Report 6779, 5 December 1968

5. Loss, F. J. and Pellini, W. S., "Coupling of Fracture Mechanics and Transition Temperature Approaches to Fracture-Safe Design," NRL Report 6913, 14 April 1969

6. Judy, Jr., R. W., Goode, R. J. and Freed, C. N., "Fracture Toughness Characterization Procedures and Interpretations to Fracture Safe Design for Structural Aluminum Alloys," NRL Report 6871, 31 March 1969; also WRC Bulletin 140, May 1969

7. Pellini, W. S. and Puzak, P. P., "Practical Considerations in Applying Laboratory Fracture Test Criteria to the Fracture-Safe Design of Pressure Vessels," NRL Report 6030, 5 November 1963; also Transactions of the ASME, Journal of Engineering for Power, October 1964

8. Pellini, W. S. and Puzak, P. P., "Fracture Analysis Diagram Procedures for the Fracture-Safe Engineering Design of Steel Structures," NRL Report 5920, 15 March 1963; also WRC Bulletin 88, May 1963

9. Cooley, L. A. and Lange, E. A., "Vertical Drop-Weight Machine for Conducting Drop-Weight NDT, Drop-Weight Tear, and Dynamic Tear Tests," NRL Report 6993, 16 January 1970

10. "The Slow Growth and Rapid Propagation of Cracks, Second Report of a Special ASTM Committee," Materials Research and Standards, Vol. 1, No. 5, May 1961, pp. 389-393