Naval Research Laboratory
Washington, DC 20375-5000

NRL Report 9360

A Laser Test Set for the Low-Power Atmospheric Compensation Experiment Satellite

JEANNE A. WELCH, BONNIE LIGHT, AND GARY L. TRUSTY

Applied Optics Branch
Optical Sciences Division

and

THOMAS H. COSDEN

University Research Foundation
Greenbelt, Maryland

October 24, 1991

Approved for public release; distribution unlimited.

REPORT DOCUMENTATION PAGE

Form Approved
OMB No. 0704-0188

Public reporting burden for this collection of information is estimated to average 1 hour per response, including the time for reviewing instructions, searching existing data sources, gathering and maintaining the data needed, and completing and reviewing the collection of information. Send comments regarding this burden estimate or any other aspect of this collection of information, including suggestions for reducing this burden, to Washington Headquarters Services, Directorate for Information Operations and Reports, 1215 Jefferson Davis Highway, Suite 1204, Arlington, VA 22202-4302, and to the Office of Management and Budget, Paperwork Reduction Project (0704-0188), Washington, DC 20503.

1. AGENCY USE ONLY (Leave blank)	2. REPORT DATE	3. REPORT TYPE AND DATES COVERED
	October 24, 1991	Final Jan 87 — Sept 90

4. TITLE AND SUBTITLE
A Laser Test Set for the Low-Power Atmospheric Compensation Experiment Satellite

5. FUNDING NUMBERS
PR - 65-2443-E1
WU - DN157149

6. AUTHOR(S)
J.A. Welch, B. Light, G.L. Trusty, and T.H. Cosden

7. PERFORMING ORGANIZATION NAME(S) AND ADDRESS(ES)
Naval Research Laboratory
Washington, DC 20375-5000

8. PERFORMING ORGANIZATION REPORT NUMBER
NRL Report 9360

9. SPONSORING/MONITORING AGENCY NAME(S) AND ADDRESS(ES)
Stratigic Defense Initiative Organization
Washington, DC 20301

10. SPONSORING/MONITORING AGENCY REPORT NUMBER

11. SUPPLEMENTARY NOTES

12a. DISTRIBUTION/AVAILABILITY STATEMENT
Approved for public release; distribution unlimited.

12b. DISTRIBUTION CODE

13. ABSTRACT *(Maximum 200 words)*

A laser test set (LATS) was designed for the Low-Power Atmospheric Compensation Experiment (LACE) satellite. LATS provided functional tests for the satellite prior to launch. Laser radiation replicating that to be employed in the satellite experiments irradiated the satellite sensors to qualitatively verify performance. LATS required a rapid, automated goniometer 2-axis pointing system. The algorithm to correct for the tangential distortion that is introduced when a speherical surface is mapped onto a planar target is described in detail.

14. SUBJECT TERMS
Spherical surface mapping
Goniometer
Tangential geometric distortion

15. NUMBER OF PAGES
52

16. PRICE CODE

17. SECURITY CLASSIFICATION OF REPORT	18. SECURITY CLASSIFICATION OF THIS PAGE	19. SECURITY CLASSIFICATION OF ABSTRACT	20. LIMITATION OF ABSTRACT
UNCLASSIFIED	UNCLASSIFIED	UNCLASSIFIED	SAR

NSN 7540-01-280-5500

Standard Form 298 (Rev. 2-89)
Prescribed by ANSI Std Z39-18
298-102

CONTENTS

1. INTRODUCTION 1

2. LATS 1

3. POINTING 6

Determination of the Mirror Normal 8
Determination of the Angles to Position the Mirror Normal 8
LATS Calibration 10

4. POWER COMPUTATION 11

5. LATS ALGORITHM 12

Initialization Routine 12
Setup Routine 12
Pointing Routine 13

6. VACUUM TESTS 13

7. CONCLUSIONS 14

8. ACKNOWLEDGMENTS 14

9. REFERENCES 14

APPENDIX A—GPIB Routines for LATS 15

APPENDIX B—Detailed Solutions for Equations (16) and (17) 17

APPENDIX C—LATS Programs 21

A LASER TEST SET FOR THE LOW-POWER ATMOSPHERIC COMPENSATION EXPERIMENT SATELLITE

1. INTRODUCTION

The spatial profile of a light beam altered by transmission through atmospheric turbulence can be restored by compensation. Atmospheric compensation techniques rely on knowledge of the altered beam intensity profile. The Low-Power Atmospheric Compensation Experiment (LACE) satellite was developed for proof-of-concept tests for atmospheric compensation of ground-based lasers. The objective of LACE is to measure, in real time, the absolute intensity and spatial distribution of low-energy, atmospherically nondamaging ultraviolet, visible, and infrared radiation transmitted from ground sites to the satellite. An array of 335 sensors is on the face of the satellite that is used to measure the intensity profile of the laser radiation incident on the satellite in orbit. This array comprises 85 sensor pairs for pulsed ultraviolet-visible near-infrared signals, 85 sensors for acousto optically modulated visible near-infrared signals, and 40 sensor pairs for mechanically chopped infrared signals. Figure 1 schematically shows the sensor array.

Prior to launch, two functional tests were required for sensor and electronics performance verification: sensor integration in a model spacecraft (integration test) and operational evaluation in the completed spacecraft under vacuum and thermal cycling (vacuum test). Because of the large number of sensors and the short satellite operating times imposed by cooling requirements, it was imperative that irradiation of each sensor occur rapidly and automatically. To conduct these tests, a laser test set (LATS) was developed. The principal function of the test system was to irradiate the sensor array subsystem (SAS) with laser radiation replicating that to be employed in the LACE experiments. This provided information to the LACE ground computer on laser power levels at the individual sensors to verify wavelength response and dynamic range of the SAS. LATS was not designed to quantitatively calibrate sensor parameters but to qualitatively verify sensor performance. Both individual sensor tests (small cross-section beams scanned over the face of the satellite) and multisensor flood tests of the entire satellite face were required for validation. Repeated irradiation of each individual sensor required a precise and reproducible pointing scheme. Flood tests of the entire sensor array required a removable lens/mirror combination to produce an expanded beam. The LATS was used in the integration test, and then it was modified for use in the vacuum tests.

2. LATS

Figure 2 is a schematic drawing of the LATS configuration. The elements of LATS included a set of lasers, a transfer mirror, a goniometer-mounted steering mirror and stepping-motor controller, a power meter, a computer, and a network of bidirectional data buses. The laser beam was expanded and collimated to a 2-in. diameter to provide a uniform beam profile. To provide an intensity reference, a beamsplitter reflected a portion of the light onto a power meter. The computer recorded the reference power by using an analog-to-digital (A/D) converter. The transmitted portion of the laser beam was reflected from a transfer mirror (TM) located in front of the plane of the sensor panel onto the goniometer-mounted steering mirror (SM). The computer then aimed the steering mirror to direct the laser beam onto the specified target sensor.

Manuscript approved September 5, 1991.

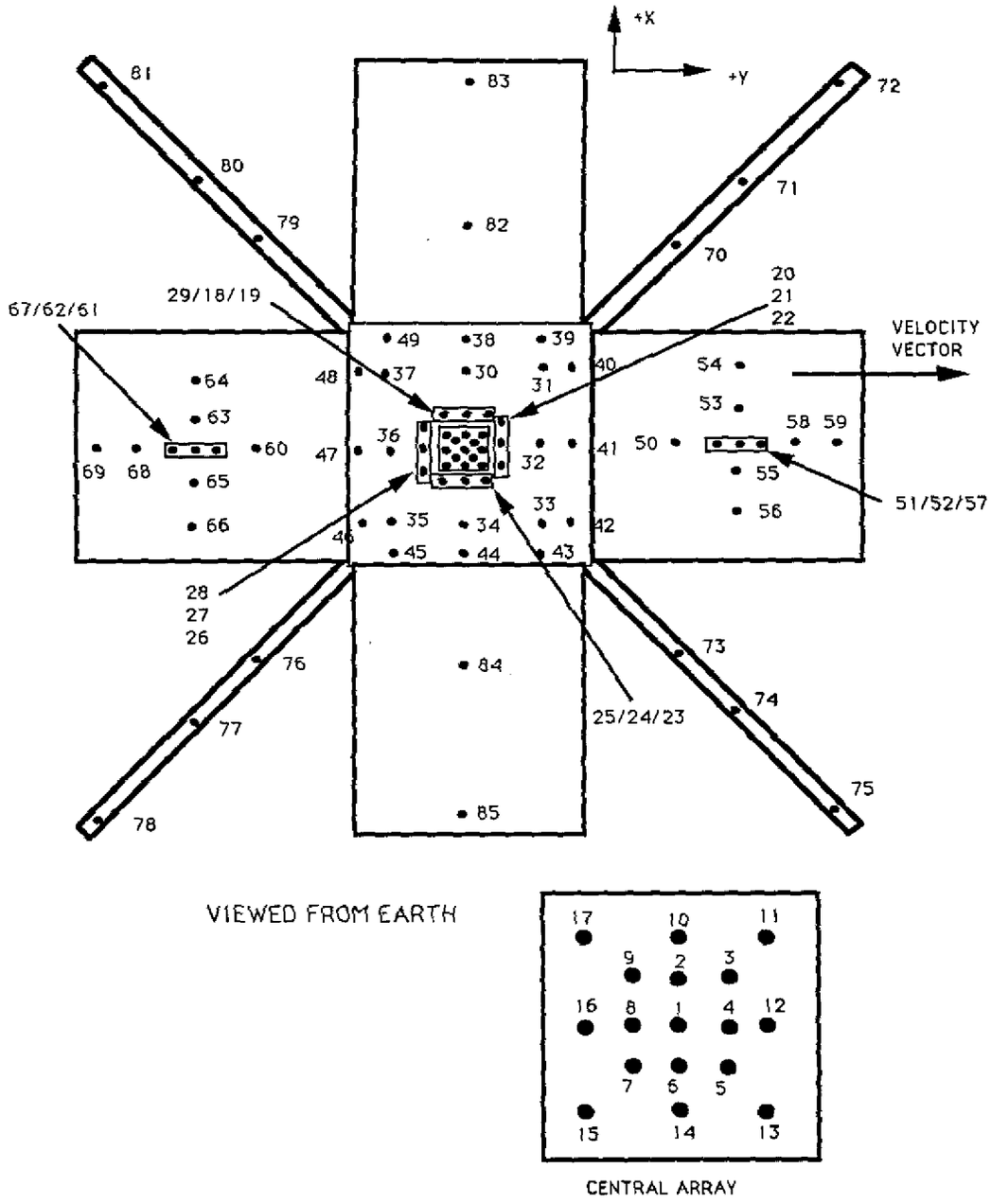

(a) Acousto-optically modulated and pulsed sensor positions

Fig. 1 — Schematic drawing of LACE sensor array

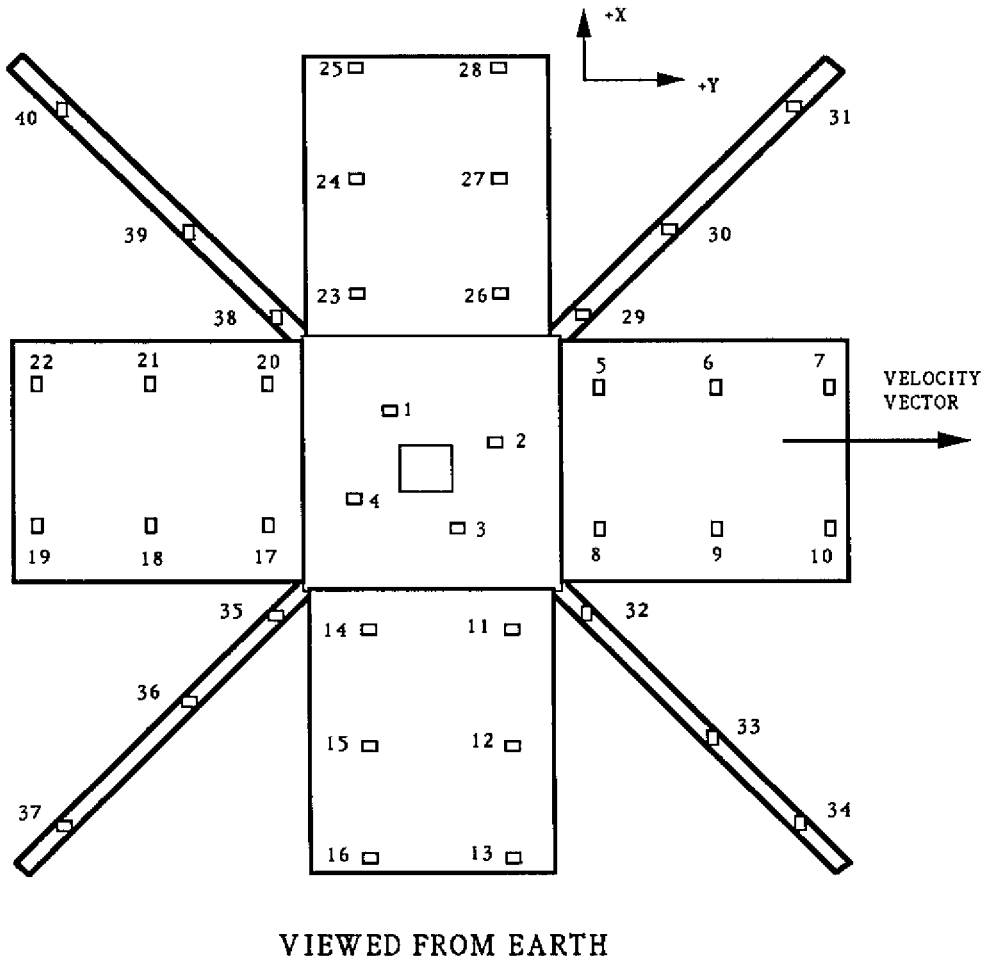

(b) Mechanically-modulated infrared sensor positions

Fig. 1 (Continued) — Schematic drawing of LACE sensor array

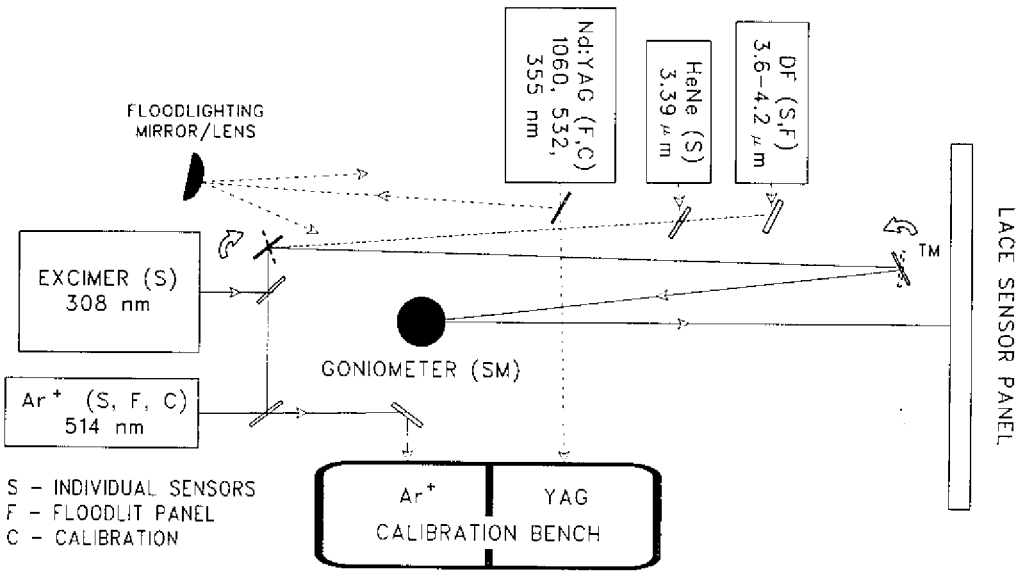

Fig. 2 — Schematic drawing of LATS configuration used for the integration tests

Generation of the required radiation was accomplished with five lasers: 25 Hz excimer and 10 Hz Nd:YAG lasers were the pulsed-radiation sources; 25 kHz acousto-optically modulated argon ion, 1440 Hz mechanically chopped helium neon (HeNe), and 1440 Hz mechanically chopped deuterium fluoride (DF) lasers were the continuous-wave sources. The LACE test plan [1] describes the radiation specifications and Tables 1 and 2 summarize them.

Table 1 — Laser Characteristics

Laser	Wavelength (μm)	Beam Diameter (mm)	Maximum Power	PRF (Hz)	Pulse Length (ns)
Excimer	0.308	22	90 mJ	25	19
Ar^+	0.5145	3	250 mW	25k	—
Nd:YAG	0.355	8	250 mJ	10	10
Nd:YAG	1.064	8	1 J	10	10
DF	3.6-4.2	5	1 W	1440	
HeNe	3.39	5	5 mW	1440	

Table 2 — LATS Integration Requirements

Laser	Wavelength (μm)	Power Density (W/cm^2)	
		Maximum	Minimum
Excimer	0.308	10^4	10^2
DF	3.6-4.2	10^{-4}	5×10^{-6}
Ar^+	0.5145	10^{-4}	10^{-6}
Nd:YAG	0.355	10^4	10^2
Nd:YAG	1.064	10^3	10^1

The goniometer was a Klinger BG 120 YZ rotary cradle mounted on an RT 120 XZ rotary stage with a Klinger CC-1 programmable indexer and a step resolution of 0.01°. Both the stage and cradle had an incremental encoder for precise closed-loop positioning and speed control. These two rotary stages are combined to produce independently controlled motion in azimuth and elevation. The goniometer mirror was in a two-axis gimble mount positioned with the mirror center at the intersection of the goniometric axes. Two independent stepper-motor channels controlled the motion of the two orthogonal axes and allowed for manual as well as programmed positioning. The stepper-motor controller is able to establish a home reference position, make absolute movements relative to that position, or move incrementally relative to a given position.

For LATS, timing control was provided by an electronic circuit rather than the specified LACE trigger laser. Sync-out pulses from the pulsed lasers and motor-driven choppers provided reference signals to trigger sensor panel data collection. The timing circuit could function at any of the necessary detection frequencies. No timing circuit was necessary for the acousto-optically chopped laser because of the short modulation times; a data pulse was always present in the detection window.

The LATS computer was an IBM PC-AT interfaced with two IEEE-488 buses. IBM general purpose interface bus (GPIB) adapters were installed in the PC for each required interface. Through the GPIB, the computer communicated with the goniometer controller, the A/D converter, and the LACE microvax sensor array subsystem test unit (SASTU) as Fig. 3 schematically shows. Two independent communication buses were used in the PC to avoid conflicts in the working environments and to reduce processing time. The first bus served as a data link between the LATS PC and the SASTU. The second bus linked the PC to the stepping-motor controller and the Hewlett-Packard 59313A A/D converter. The SASTU served as system controller-in-charge (CIC) on the first bus. The IBM PC-AT LATS computer was controller on the second bus and operated the two independent axes of the goniometer and the A/D converter as three independent devices. Table 3 summarizes the contents of the configuration files (IBCONF) for the devices used with the GPIB bus. Reference 2 provides a description of GPIB control. Appendix A lists the required subroutine sequence for goniometer movement, data acquisition, and data transfer.

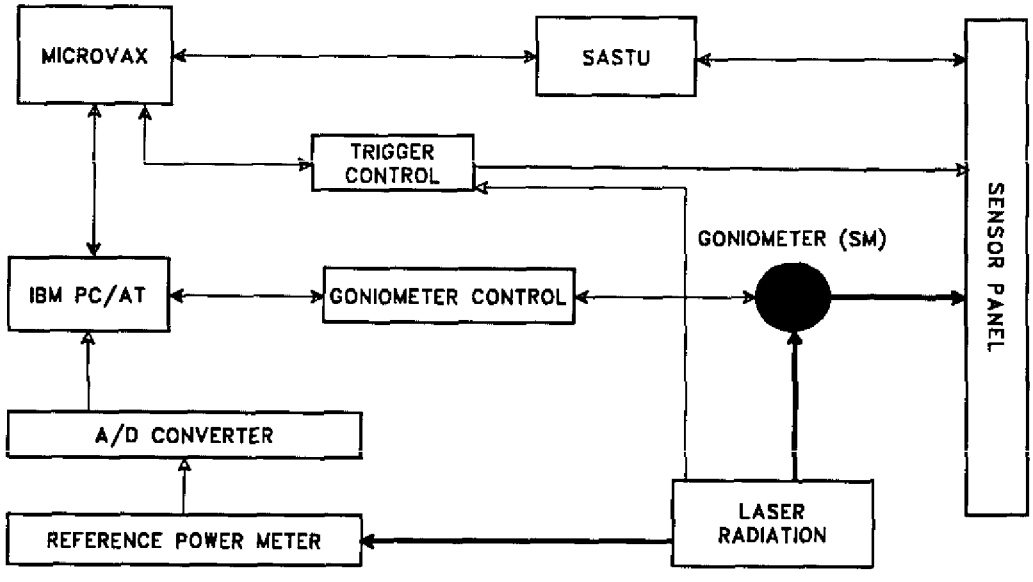

Fig. 3 —Schematic drawing of LATS system. The laser beam is shown in bold.

Table 3 — GPIB Configuration Parameters for LATS

Device	Address	Time Out (s)	EOS* Byte	CIC	EOI†	Access
GPIB0	00H	3	01H	YES	YES	
GPIB1	01H	none	0AH	NO	YES	
XAXIS	06H	3	01H		YES	GPIB0
YAXIS	07H	3	01H		YES	GPIB0
ADC	08H	10	01H		YES	GPIB0
MVAX		3	0AH		YES	GPIB1

*End of string
†Send EOI (end of data message) with EOS

Programmed control consisted of an ASCII-coded set of high-level instruction commands written to the goniometer controller from the LATS computer over the interface bus. These ASCII strings controlled goniometer device velocity, acceleration, displacement, directionality, scanning interval, and read/write information to the devices. The CC-1 stepper-motor controller manual gives a full description of the programmed and manual operation of the stepper-motor controller.

3. POINTING

Initially, it was thought that accurate pointing could be achieved by evaluating the simple planar trigonometric relations governing a point source incident on a flat target. The computation of the tangent of the enclosed angle, the ratio of the vertical and horizontal distances of the sensor from the origin, and the distance from the steering mirror to the target panel yielded azimuth and elevation angles corresponding to the pointing vector for a given sensor location. A scaled-down laboratory demonstration revealed the large inaccuracies of this simple approach.

The task of pointing a beam steered by an azimuth-elevation device onto a planar surface at a close distance is to map a spherical surface onto an intersecting plane. Since the sensors on the test panel were arranged in a flat plane indexed by Cartesian coordinates and the motion of the incident light swept out spherical contours, a tangential geometric distortion was introduced, and it was necessary for an appropriate mapping to be derived.

Figure 4 shows the laboratory coordinate system used to characterize the mapping of a spherical surface onto a planar surface. The origin is at the center of the steering mirror, coincident with the goniometer origin; angles are measured in the right-handed sense and the z-direction toward the target is negative.

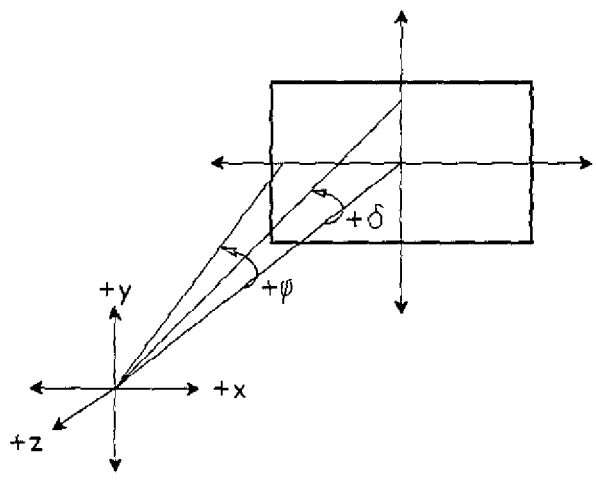

Fig. 4 — Laboratory coordinate system used for LATS

For notation purposes, the generalized vector $\vec{v}$ is defined in terms of the unit vector $\vec{v}$ as

$$\vec{v} = v_x\hat{x} + v_y\hat{y} + v_z\hat{z} = (v_x, v_y, v_z)^T \tag{1}$$

$$\vec{v} \equiv v\hat{v} = v(\hat{v}_x, \hat{v}_y, \hat{v}_z)^T, \tag{2}$$

where $(v_x, v_y, v_z)^T$ is the notation for the transpose of the column vector for matrix manipulations. The magnitude of the vector v is given by

$$v \equiv (v_x^2 + v_y^2 + v_z^2)^{\frac{1}{2}}. \tag{3}$$

In general, as Fig. 5 shows, a reflection of a mirror is described with three vectors. $\vec{s}$ is the vector from the steering mirror to the source, $\vec{r}$ is the vector from the steering mirror to the target, and, $\vec{n}$ is the mirror normal vector that is the coplanar bisector of the angle formed by $\vec{s}$ and $\vec{r}$ shown in Fig. 5.

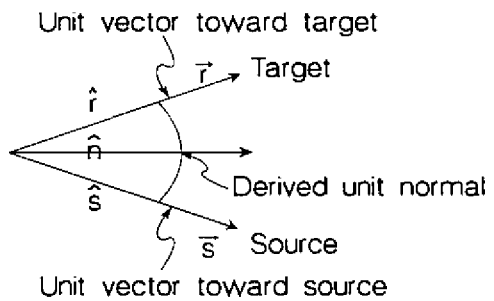

Fig. 5 — Schematic representation of the vectors for LATS pointing algorithm

Two steps are required to determine the transformation to map from the goniometric system to a planar surface. The first step is to find where the mirror normal $\hat{n}$ should be located to reflect light off the goniometer mirror from the source at $\hat{s}$ to a target at $\hat{r}$, and the second step is to find the angles (ϕ, δ) that will position the goniometer steering mirror normal at this $\hat{n}$.

The accuracy of the pointing algorithms depends on the accuracy with which the experiment components are located and oriented in the laboratory system. For the goniometer, this is implicit and fixed. By design its coordinates define the laboratory system, and other LATS components must by calibrated with respect to it.

Ideally, the target face is perfectly flat, is perpendicular to the laboratory negative z-axis, and has x- and y-axes parallel to the laboratory axes defined by the goniometer. The target face flatness is least amenable to calibration. In the LATS, the target face is the sensor panel of a precisely machined satellite that is large and massive but not under unreasonable strain. The width of the beam relative to the size of the irradiated sensor area made target flatness a negligible correction.

Perpendicularity of the target face and the negative laboratory z-axis is achieved to adequate accuracy through mechanical placement of the two systems. This also ensures collinearity of the target and goniometer origins. However, it is also a simple matter to redefine the target face coordinate system to lie on the laboratory z-axis. Then the new target sensor positions are computed from the new target origin offset.

Finally, the target face x- and y-axes must be parallel to the laboratory axes and not rotated by angle α about the z axis. Two approaches are used to correct this error: position the target and the goniometer so that the axes are parallel, or measure and correct for a relative displacement by rotating the desired target face (x_T, y_T) coordinates through $-\alpha$ into the laboratory frame coordinates (x_L, y_L) and pointing the beam at (x_L, y_L) instead of (x_T, y_T) for each sensor:

$$\begin{bmatrix} x_L \\ y_L \end{bmatrix} = \begin{bmatrix} \cos\alpha & -\sin\alpha \\ \sin\alpha & \cos\alpha \end{bmatrix} \begin{bmatrix} x_T \\ y_T \end{bmatrix} . \tag{4}$$

Either approach requires calibrating the source steering mirror as discussed in the LATS calibration section below.

To measure the rotational misalignment, direct the goniometer to a convenient (x, y) position in the laboratory frame. (0, 0) is suggested to simplify the expressions. Rearranging the expression in Eq. (4) yields the following expressions for α. At $x = 0$,

$$\sin \alpha = \frac{x_T}{y}, \tag{5}$$

where y is the measured target frame coordinate, and at $y = 0$,

$$\sin \alpha = -\frac{y_T}{x}. \tag{6}$$

Similarly, x is measured in the target frame coordinate system. The beam is pointed toward large excursions along the x- and y-axes, and deviations x_T and y_T from the targets are measured and used to compute α. If a nonzero α is determined, target frame coordinates are transformed to the laboratory-parallel target frame by using Eq. (4).

Determination of the Mirror Normal

The desired normal orientation of the mirror normal vector, in terms of components along the laboratory axes, is given as the coplanar bisector of $\hat{r}$ and $\hat{s}$,

$$\hat{n} = \frac{\hat{r} + \hat{s}}{\sqrt{2}\, n} = \left\{\frac{1}{2n}\right\} \left(\hat{r}_x + \hat{s}_x,\ \hat{r}_y + \hat{s}_y,\ \hat{r}_z + \hat{s}_z\right)^T = \left(\hat{n}_x,\ \hat{n}_y,\ \hat{n}_z\right)^T, \tag{7}$$

where

$$n = (\vec{n} \cdot \vec{n})^{\frac{1}{2}} = (1/\sqrt{2})(1 + \hat{r}_x\hat{s}_x + \hat{r}_y\hat{s}_y + \hat{r}_z\hat{s}_z)^{\frac{1}{2}}. \tag{8}$$

Because the source beam is reflected one or more times before impinging on the steering mirror at the goniometer origin the light source $\vec{s}$ is located in the laboratory frame at the center of the TM as Fig. 2 indicates. The vector $\vec{r}$ is defined similarly as the sensor target position in the laboratory frame, with the origin of the vector r at the center of the steering mirror and the target at the center of the sensor. By measuring the source and target vectors, the terms s, $\hat{s}$, r, and $\hat{r}$ are easily computed from Eqs. (2) and (3), and the mirror normal is then determined from Eqs. (7) and (8).

This approach accounts for arbitrary misalignments in almost all angles and positions with the exception of two: the steering mirror must be at the origin of the goniometer so that the vertex of the reflection is at the center of rotation, and the transfer mirror is presumed to reflect the light beam directly onto the origin. Arbitrary misalignments are accommodated as long as the angles required to reflect the laser beam from the sensor array origin to the source can be measured accurately.

Determination of the Angles to Position the Mirror Normal

Finally, the angles (ϕ, δ) that will position $\hat{n}$ for the chosen target must be determined. These angles will be dependent on where the mirror normal is when $(\phi, \delta) = (0, 0)$. This is defined as the initial orientation mirror normal, $\hat{n}_0$ The goniometer angles (ϕ_0, δ_0) are the angles that reflect the laser beam from the origin directly back to the source $\vec{s}$ on the transfer mirror. Again, $\hat{n}_0$ and (ϕ_0, δ_0) are measured in the laboratory frame.

The standard matrix representation of a rotation of a unit vector $\hat{v}$ through δ about x is

$$\hat{R}(\delta)\hat{v} = \begin{bmatrix} 1 & 0 & 0 \\ 0 & \cos\delta & -\sin\delta \\ 0 & \sin\delta & \cos\delta \end{bmatrix} \begin{bmatrix} \hat{v}_x \\ \hat{v}_y \\ \hat{v}_z \end{bmatrix} = \begin{bmatrix} \hat{v}_x \\ \hat{v}_y\cos\delta - \hat{v}_z\sin\delta \\ \hat{v}_y\sin\delta + \hat{v}_z\cos\delta \end{bmatrix}. \tag{9}$$

Similarly, for a rotation through ϕ about y,

$$\hat{R}(\phi)\hat{v} = \begin{bmatrix} \cos\phi & 0 & \sin\phi \\ 0 & 1 & 0 \\ -\sin\phi & 0 & \cos\phi \end{bmatrix} \begin{bmatrix} \hat{v}_x \\ \hat{v}_y \\ \hat{v}_z \end{bmatrix} = \begin{bmatrix} \hat{v}_x\cos\phi + \hat{v}_z\cos\phi \\ \hat{v}_y \\ -\hat{v}_x\sin\phi + \hat{v}_z\cos\phi \end{bmatrix}. \tag{10}$$

Note that the elevation rotation leaves x unchanged, and the azimuthal rotation leaves y unchanged, as these are the corresponding orthogonal rotation axes. The combined rotation is given by the product matrix,

$$\hat{R}(\phi,\delta)\hat{v} = \hat{R}(\phi)\hat{R}(\delta)\hat{v} = \begin{bmatrix} \cos\phi & \sin\phi\sin\delta & \sin\phi\cos\delta \\ 0 & \cos\delta & -\sin\delta \\ -\sin\phi & \cos\phi\sin\delta & \cos\phi\cos\delta \end{bmatrix} \begin{bmatrix} \hat{v}_x \\ \hat{v}_y \\ \hat{v}_z \end{bmatrix}. \tag{11}$$

$\hat{R}^{-1}(\phi, \delta) = \hat{R}^T(\phi, \delta)$ for this orthogonal matrix, thus simplifying the matrix transformations required to compute the mirror normal,

$$\hat{R}(\phi,\delta) \begin{bmatrix} \hat{v}_x \\ \hat{v}_y \\ \hat{v}_z \end{bmatrix} = \left(\hat{R}_x, \hat{R}_y, \hat{R}_z\right) \begin{bmatrix} \hat{v}_x \\ \hat{v}_y \\ \hat{v}_z \end{bmatrix} = \begin{bmatrix} \hat{v}_x\cos\phi + \hat{v}_y\sin\phi\sin\delta + \hat{v}_z\sin\phi\cos\delta \\ \hat{v}_y\cos\delta - \hat{v}_z\sin\delta \\ -\hat{v}_x\sin\phi + \hat{v}_y\cos\phi\sin\delta + \hat{v}_z\cos\phi\cos\delta \end{bmatrix}. \tag{12}$$

To determine what angles are required to direct the source beam onto the target, the rotation that carries the initial mirror normal $\hat{n}_0 = (\hat{n}_{0x}, \hat{n}_{0y}, \hat{n}_{0z})^T$ into the desired mirror normal $\hat{n} = (\hat{n}_x, \hat{n}_y, \hat{n}_z)^T$ is determined from Eq. (12):

$$\hat{n}_x = \hat{n}_{0x}\cos\phi + \hat{n}_{0y}\sin\phi\sin\delta + \hat{n}_{0z}\sin\phi\cos\delta \tag{13}$$

$$\hat{n}_y = \hat{n}_{0y}\cos\phi - \hat{n}_{0z}\sin\delta \tag{14}$$

$$\hat{n}_z = -\hat{n}_{ox}\sin\phi + \hat{n}_{0y}\cos\phi\sin\delta + \hat{n}_{0z}\cos\phi\cos\delta. \tag{15}$$

The trigonometric functions in ϕ and δ given in Eqs. (13) and (15) complicate rearrangement into closed expressions for the angles themselves; some trigonometric substitutions and the Pythagorean relation are required for solution; the details are described in Appendix B,

$$\delta = \cos^{-1}\left[\frac{\hat{n}_y}{(1 - \hat{n}_{0x}^2)^{\frac{1}{2}}}\right] - \cos^{-1}\left[\frac{\hat{n}_{0y}}{(1 - \hat{n}_{0x}^2)^{\frac{1}{2}}}\right] \tag{16}$$

$$\phi = \cos^{-1}\left[\frac{\hat{n}_z}{(1 - \hat{n}_y^2)^{\frac{1}{2}}}\right] - \cos^{-1}\left[\frac{(\hat{n}_{0y}\sin\delta + \hat{n}_{0z}\cos\delta)}{(1 - \hat{n}_y^2)^{\frac{1}{2}}}\right]. \tag{17}$$

When the goniometer is positioned at (ϕ, δ), light from the transfer mirror, positioned at (s_x, s_y, s_z) and incident on a mirror at the goniometer origin at orientation (n_{0x}, n_{0y}, n_{0z}) when $(\phi, \delta) = (0, 0)$, is reflected to the target position (r_x, r_y, r_z).

The mirror normal vector required to direct the source onto the target is easily computed from the values of the source and target normal vectors

$$\hat{n}_i = \frac{\hat{r}_i + \hat{s}_i}{2} \qquad i = x, y, z \tag{18}$$

and normalizing the resultant vector.

LATS Calibration

It is important to precisely determine steering mirror position and to accommodate imperfect goniometer mirror mounting. The following procedure does not depend on the presumption of target flatness nor on the determination and elimination of the rotational alignment error α that are both zero at the origin. It is an iterative computation dependent on the two sets of goniometer angles (ϕ, δ) that reflect the source beam onto the target origin and the steering mirror in the laboratory frame.

The steering mirror is placed in the $-z$ hemisphere, as close angularly to the target origin as possible without eclipsing a sensor. Since the goniometer mirror is to reflect the beam at twice the normal angle of incidence, there is an angular precision bias between targets on the source mirror side of the target origin and targets on the opposite side of the target origin. Angular inaccuracy and imprecision are doubled by the reflection and are proportional to the source-goniometer/target-angle magnitude. Therefore, all angles are minimized by keeping the steering mirror angularly close to the target origin. If the steering mirror cannot be located angularly coincident with the target origin, the alternatives are to locate it in the xz-plane eliminating y bias, or in the yz-plane eliminating x bias. Because of the noncritical accuracy requirements of the present experiment, the steering mirror was placed approximately 8° from the target origin.

Two simple measurements on the LATS are sufficient to permit an iterative computation of the mirror normal that reflects a source beam onto the target origin at $(0, 0, -z)$. These two measurements are the goniometer angles required to reflect the source beam onto the target origin, and the angles required to reflect the source beam back onto itself. Despite inaccuracies in initial estimates of both the source position and the at-rest goniometer mirror normal $\hat{n}_0$, the prescribed measurements contain sufficient information about the angle to converge numerically to a self-consistent and correct value of both position vectors simultaneously.

It is convenient but not important that (ϕ, δ) be nearly zero. The goniometer used in the LATS supported a logical definition of $(\phi, \delta) = (0, 0)$ that was used. This constitutes the initial orientation of the goniometer mirror normal. The estimated position of the source (x, y, z) is measured in the laboratory frame. The vector is normalized and the result designated $\hat{s}_0$ where the subscript denotes an initial approximation to the true source normal. It is precisely because of the difficulty of measuring both of these critical parameters accurately that the method described is used.

The first iterative correction to the initial mirror normal vector pointing at the sensor array origin, $r = (0, 0, -1)$, is given as

$$\hat{R}_0 \hat{n}_0 = (2 - 2\hat{s}_{0z})\,(s_{0x} - 0,\ s_{0y} - 0,\ s_{0z} - 1) = (2 - 2\hat{s}_{0z})\,(s_{0x},\ s_{0y},\ s_{0z} - 1) \tag{19}$$

from Eq. (7), with $\hat{R}_0$ the rotation given by Eq. (12) that reflects the source beam onto the origin. This new $\hat{n}_0$ is used in Eqs. (13) and (15) to determine a new $\hat{s}_0$ from the measured angles (ϕ_0, δ_0) required to reflect the initial mirror normal onto the source. These values, in turn, are used to iteratively determine a new initial mirror normal in Eq. (19) until the solution converges.

Because of the angle-doubling effect of beam reflection, an error in the mirror normal causes twice the error in the reflected beam. Conversely, an error in the reflected beam's measurement corresponds to half the error in the mirror normal. Beginning the iterative procedure with the right-hand-side of Eq. (19) supports convergence because errors in the position of $\hat{s}$ are halved before correcting with Eqs. (13) and (15) on the next iteration. Convergence is guaranteed if the experiment is designed with the goniometer at-rest mirror normal $\hat{n}_0$, not the source position $\hat{s}$, which is angularly closer to the laboratory target origin. Then the rotation required to reflect the mirror normal onto the target origin is smaller than that required to reflect the mirror normal onto the source. For the nominal position $\hat{n}_0 = \hat{r}_0$, this error is halved, which roughly cancels the angle-doubling error introduced in Eqs. (13) and (15). Application of Eq. (19) halves errors while application of Eqs. (13) and (15) preserves them, and the procedure converges.

Implementation of this goniometric mapping in the laboratory demonstrated a large improvement over the initial approach. However, the accuracy of the mapping is a function of the accuracy of the input parameters, including presumptions of perpendicularity of the target plane and the laboratory z-axis. For the supplied, not measured, sensor locations used here, each position was indexed by its xy distance from the satellite origin and specified to accuracies of 1.0 cm for the infrared sensors and 0.5 cm for the ultraviolet and visible sensors; errors larger than those specified are thought to occur for several sensor locations in the model spacecraft used for the integration tests. These unexpectedly large inaccuracies in sensor placement from the indexed Cartesian coordinates required the mapping to be augmented with manual position fine tuning to establish the final goniometric pointing vector.

4. POWER COMPUTATION

Incident power computations were made by the LATS system and sent to the SASTU for comparison with the powers collected at the sensors. The ratio of the beam power reflected by the beamsplitter to that transmitted through the optical path to the target R_b was known with accuracies of 10% for each wavelength used. The computation of incident power required knowledge of laser and sensor-dependent parameters. These parameters included any neutral density filtering in the laser beam (ND), the pulse repetition frequency (PRF) of the laser, the pulse length (PL) of the laser, and the ratio of the areas of

the sensor and the laser beam. Equations. (20) and (21) give the incident power for the chopped and pulsed sensors, respectively:

$$P_{chopped} = P_{in} \cdot 10^{-ND} \cdot R_b \cdot \frac{Area_{sensor}}{Area_{beam}} , \tag{20}$$

$$P_{pulsed} = P_{in} \cdot 10^{-ND} \cdot PRF^{-1} \cdot PL^{-1} \cdot \frac{Area_{sensor}}{Area_{beam}} . \tag{21}$$

P_{in} is the calibrated power reading from the analog to digital converter. To optimize the placement of the laser beam at each sensor following goniometric and manual pointing, the beam was scanned over a 0.25° × 0.25° grid in 5 × 5 steps centered on the sensor. Average power levels are measured, and the position yielding the highest power is retained for the final vector.

5. LATS ALGORITHM

Three computer programs were used for the LATS tests. An initialization routine created and formatted the five sensor-dependent position information bases for the 335 satellite sensors into five sensor-dependent location files (pulsed high power, pulsed low power, modulated, infrared high power, and infrared low power). The infrared and ultraviolet sensors are distinct detector pairs that cover well-defined power ranges. A setup routine calculated the goniometer pointing vectors, allowed manual vector correction, and wrote the final vector database. Finally, a pointing routine interfaced with the SASTU passed sensor identification numbers, pointed the laser beam at the specified sensor, and passed power data back to the SASTU. All programs were written in RM Professional Fortran [3], and the setup and pointing routines are included in Appendix C.

Initialization Routine

The following describes the procedures in the initialization routine.

A. Prompt user for input laser identification number to distinguish among the five sensor-dependent location files.

B. Input Cartesian coordinates of the sensor with respect to the satellite origin.

C. Write the indexed coordinates to the sensor-dependent location file.

Setup Routine

The following describes the procedures in the goniometer setup routine.

A. Prompt user for the sensor identification number and laser type.

B. Look up indexed position information from sensor location file.

C. Compute and calibrate pointing angles.

1. Compute rest mirror normal $\hat{n}_0$ from steering mirror and target vectors.
2. Compute desired normal orientation $\hat{n}$ from Eq. (7) knowing the target vector and the source vector. The initial mirror normal is computed by using the solution $\hat{n}_0$ to recompute $\hat{s}$ that is then solved again for the mirror normal until the solutions converge.
3. Compute elevation and azimuth angles for sensor location from Eqs. (16) and (17).

D. Direct the laser beam onto the specified sensor.

   1. Covert angular information into step interval and form ASCII string commands.*
   2. Write the command string to the goniometer.

E. Prompt user to manually correct laser beam placement on the sensor.

F. Scan across sensor face to locate laser beam placement for maximum sensor irradiance (optional routine).

G. Record position of maximum irradiance on position vector database.

Pointing Routine

The following describes the procedures followed in the goniometer pointing routine.

A. Read sensor identification from SASTU.

B. Obtain sensor azimuth and elevation angles from vector information database.

C. Direct laser beam on the specified sensor.

D. Record incident laser beam power.

E. Loop to A.

Upon completion of the automated individual sensor tests, a flood test was performed at each wavelength. By reflecting the laser beam from the transfer mirror to the convex mirror/concave lens assembly illustrated in Fig. 2, the beam was expanded to irradiate all sensors on the satellite simultaneously for the multisensor flood tests. These tests, used to determine whether there is interference between sensors, do not require precision pointing or computer control.

6. VACUUM TESTS

Figure 6 shows several modifications that were made on the LATS for the vacuum chamber tests. A doubled Nd:YAG laser, an argon-ion laser, and an infrared quartz-halogen lamp were the three sources used for the vacuum tests. Because of mechanical limitations, the infrared lamp was used only for flood testing of the sensor array, and the two visible lasers were used for both multisensor flood testing and individual sensor irradiation. Interchangeable lenses placed at the entrance port to the vacuum chamber provided the collimated or diverging laser beam for the two types of tests, individual and flood.

Long periods of time were required to attain the vacuum in the large satellite chamber. To avoid having to open the chamber between thermal cycles or between individual/flood tests modes to reestablish the vacuum, a remotely controlled method of switching between multi-sensor flood testing and individual sensor testing was devised. A convex mirror mounted to the backside of the goniometer gimble mount allowed one hemisphere of the goniometer to reflect collimated laser light and the other hemisphere to reflect rapidly diverging light. To switch between the two types of tests, the goniometer carousel had

*To write a string to the goniometer controller the length of the string must be specified. It is necessary for this program, as written in RM Professional Fortran, to branch into individual subroutines to accommodate the stringsize of the goniometer command.

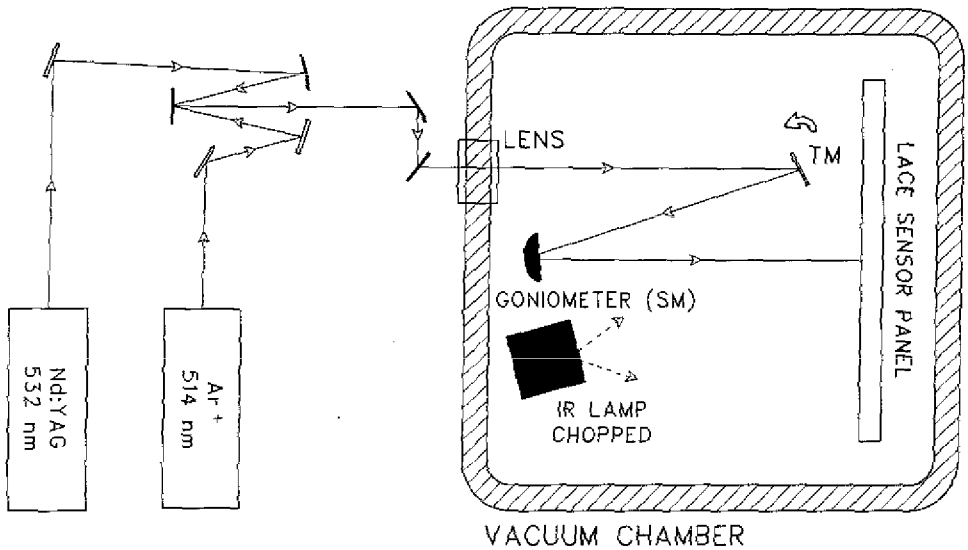

Fig. 6 — Schematic drawing of LATS configuration used for the vacuum tests

only to be rotated by 180°. The infrared lamp was in a pressurized canister and positioned in the vacuum chamber to provide complete irradiation of the satellite face. Except for the modifications just described, validation tests for the scanned individual sensors and multisensor tests equivalent to those outside the chamber were performed on the spacecraft in the vacuum chamber.

7. CONCLUSIONS

The LATS system provided precise, repeatable, and automated goniometric vectoring for preflight system integration and operational evaluation of the LACE spacecraft. The pointing vector algorithm developed for the goniometer provided placement of a laser beam at any sensor location on the satellite, based only on the indexed Cartesian coordinates of the sensor and the distance of the goniometer steering mirror and transfer mirror from the satellite sensor plane origin. Large errors in sensor location from the indexed coordinates were corrected with manual vector positioning. Once pointing vectors were established for all satellite sensor locations, automated laser testing was performed.

8. ACKNOWLEDGMENT

Many discussions of the pointing problem with Dr. Scott Wallace are gratefully acknowledged.

9. REFERENCES

1. "Low Power Atmospheric Compensation Experiment Requirements Document," SSD-D-IL001, Revision 5, Jan. 1987.

2. IBM Personal Computer General Purpose Interface Bus Adapter Programming Support. Boca Raton, FL: IBM.

3. RM/FORTRAN Version 2.4. Rolling Hills Estates, CA: Ryan-McFarland.

Appendix A

GPIB ROUTINES FOR LATS

GPIB Routine for LATS Goniometer Motion

```
C   move x-axis n steps (n = two digit integer, e.g. 10)
    integer*2 xaxis
    character*5 X$
C   assign unit descriptor for x-axis
    xaxis = ibfind ('xaxis')
C   clear the device
    call ibclr (xaxis)
C   file "RATE" contains goniometer velocity and acceleration values
C   write file "RATE" to the x-axis
    call ibwrtf (xaxis, rate)
C   clear the device
    call ibclr (xaxis)
C   construct string containing N number of steps
    X$ = 'N'//' '//'10'//char(13)
C   write X$ to x-axis
    call ibwrt (xaxis, X$, 5)
```

GPIB Routine to Read the Analog to Digital Converter

```
C   read converted measurement from HP converter
    integer*2 adc
    character*2 buffera
C   assign unit descriptor for analog to digital converter
    adc = ibfind ('adc')
C   command for converter to write data is 'H8AJ'
    call ibwrt (adc, 'H8AJ', 4)
C   data is written as binary-coded decimal in ASCII
    call ibrd(adc, buffera, 2)
```

GPIB Routine to Write and Read to/from the SASTU

```
C   assign unit descriptor for adapter linked to SASTU
    integer*2 gp
    character*10 bufferb, bufferc
    gp = ibfind ('GPIB2')
C   write data to GPIB adapter
    call ibwrt (gp, bufferb, 10)
C   read data from the GPIB adapter
    call ibrd (gp, bufferc, 10)
```

Appendix B

DETAILED SOLUTION FOR EQUATIONS (16) AND (17)

To solve for ϕ and δ, three equations are used in two unknowns. These trigonometric representations must be arranged into closed expressions for the angles. By using trigonometry and the generalized Pythagorean relation

$$\hat{q}_x^2 + \hat{q}_y^2 + \hat{q}_z^2 = 1, \tag{B1}$$

these expressions can be found.

From Eq. (14),

$$\hat{n}_y = \hat{n}_{0y} \cos \delta - \hat{n}_{0z} \sin \delta. \tag{B2}$$

By using the trigonometric construction shown in Fig. B1 and making the following substitutions, $a = \hat{n}_{0y}$, $b = \hat{n}_{0z}$ yields

$$\hat{n}_y = a \cos \delta - b \sin \delta \tag{B3}$$

$$= c \left(\cos \alpha \cos \delta - \sin \alpha \sin \delta\right) \tag{B4}$$

$$= c \cdot \cos(\alpha + \delta) \tag{B5}$$

by trigonometric identity;

$$\hat{n}_y = (a^2 + b^2)^{\frac{1}{2}} \cos(\alpha + \delta) \tag{B6}$$

$$\hat{n}_y = (\hat{n}_{0y}^2 + \hat{n}_{0z}^2)^{\frac{1}{2}} \cos(\alpha + \delta). \tag{B7}$$

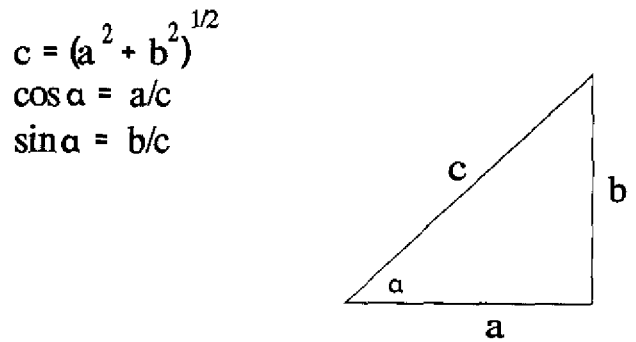

Fig. B1 — Trigonometric construction needed to simplify the expressions used to solve for Eqs. (16) and (17)

By using the identity in Eq. (B1) and rearranging:

$$\cos(\alpha + \delta) = \frac{\hat{h}_y}{(1 - \hat{h}_{0x}^2)^{\frac{1}{2}}} \tag{B8}$$

$$\delta = \cos^{-1}\left[\frac{\hat{h}_y}{(1 - \hat{h}_{0x}^2)^{\frac{1}{2}}}\right] - \alpha \tag{B9}$$

$$\delta = \cos^{-1}\left[\frac{\hat{h}_y}{(1 - \hat{h}_{0x}^2)^{\frac{1}{2}}}\right] - \cos^{-1}\left[\frac{\hat{h}_{0y}}{(1 - \hat{h}_{0x}^2)^{\frac{1}{2}}}\right]. \tag{B10}$$

This is a closed-form expression for δ.

From Eq. (15),

$$\hat{h}_z = -\hat{h}_{0x} \sin\phi + \hat{h}_{0y} \cos\phi \sin\delta + \hat{h}_{0z} \cos\phi \cos\delta \tag{B11}$$

$$= \cos\phi(\hat{h}_{0y} \sin\delta + \hat{h}_{0z} \cos\delta) - \sin\phi(\hat{h}_{0x}), \tag{B12}$$

which is of the same form as Eq. (B2). Letting $a = (\hat{h}_{0y} \sin\delta + \hat{h}_{0z} \cos\delta)$ and $b = \hat{h}_{0x}$, rearranging the expression yields

$$\hat{h}_z = \left[(\hat{h}_{0y} \sin\delta + \hat{h}_{0z} \cos\delta)^2 + \hat{h}_{0x}^2\right]^{\frac{1}{2}} \cos(\phi + \beta). \tag{B13}$$

Simplification is possible by expanding the square-root term as follows:

$$(\hat{h}_{0y} \sin\delta + \hat{h}_{0z} \cos\delta)^2 + \hat{h}_{0x}^2 = \hat{h}_{0y}^2 \sin^2\delta + \hat{h}_{0z}^2 \cos^2\delta + 2\hat{h}_{0y}\hat{h}_{0z} \sin\delta \cos\delta\, \hat{h}_{0x}^2 \tag{B14}$$

$$= \hat{h}_{0y}^2(1 - \cos^2\delta) + \hat{h}_{0z}^2(1 - \sin^2\delta) + \hat{h}_{0x}^2 + 2\hat{h}_{0y}\hat{h}_{0z} \sin\delta \cos\delta \tag{B15}$$

$$= (\hat{h}_{0x}^2 + \hat{h}_{0y}^2 + \hat{h}_{0z}^2) + 2\hat{h}_{0y}\hat{h}_{0z} \sin\delta \cos\delta - \hat{h}_{0y}^2 \cos^2\delta - \hat{h}_{0z}^2 \sin^2\delta \tag{B16}$$

$$= 1 - (\hat{h}_{0y}^2 \cos^2\delta - 2\hat{h}_{0y}\hat{h}_{0z} \sin\delta \cos\delta + \hat{h}_{0z}^2 \sin^2\delta) \tag{B17}$$

$$= 1 - (\hat{h}_{0y} \cos\delta - \hat{h}_{0z} \sin\delta)^2 \tag{B18}$$

$$= 1 - \hat{h}_y^2, \tag{B19}$$

from Eq. (B2). From Eq. (B13)

$$\hat{n}_z = (1 - \hat{n}_y^2)^{\frac{1}{2}} \cos(\phi + \beta) \tag{B20}$$

$$\phi = \cos^{-1}\left[\frac{\hat{n}_z}{(1 - \hat{n}_y^2)^{\frac{1}{2}}}\right] - \cos^{-1}\left[\frac{(\hat{n}_{0y} \sin\delta + \hat{n}_{0z} \cos\delta)}{(1 - \hat{n}_y^2)^{\frac{1}{2}}}\right] . \tag{B21}$$

Eq. (B21) is a closed form expression for ϕ.

APPENDIX C

LATS PROGRAMS

C1. Setup Routine

```
C       19 NOV 1987
C       PROGRAM TARGETSET.FOR SEPT1, 1987
C       MODIFIED FROM PROGRAM LATS.FOR AUGUST, 1987
C       MUST BE LINKED WITH FILES PFIB, M1SET, M2SET, SCAN
C       PROGRAM SERVES AS AN INTERACTIVE SET UP PROGRAM
C       REQUESTING SENSOR #, MOVING GONIOMETER TO SENSOR LOCUS
C       PROMPTING USER TO MANUALLY POSITION BEAM, SCANNING BEAM
C       ACROSS SENSOR TO MAXIMIZE IRRADIANCE, AND RECORDING
C       THIS POSITION INFORMATION ON DATA FILES
C       THE FOLLOWING IS GPIB PROFESSIONAL FORTRAN HEADER
        COMMON /IBGLOB/ IBSTA
        integer*2  ibclr, TIMO, END
        integer*2  ibfind, IBSTA
        integer*2  ibrd, ibrdf, ibtmo
        integer*2  ibwrt, ibwrtf
        INTEGER*2  TNONE, T10us,T30us,T100us,T300us
        INTEGER*2  T1ms,T3ms,T10ms,T30ms,T100ms
        INTEGER*2  T300ms,T1s,T3s,T10s,T30s
        INTEGER*2  T100s,T300s,T1000s,CMPL
C       VARIABLE DECLARATIONS FOR PROGRAM
        INTEGER     XAXIS, YAXIS, GP, DN
        INTEGER*2   BD, GPIB0, IOUT, F, ENTRY
        INTEGER*2   PPR, SPR, IXX, IYY, IX, IY, PI, DI
        REAL    R(3), SH(3), MH(3)
        REAL    PH, DL, XP, YP
        CHARACTER*2 SE, S$, T$, U$, V$, G$
        LOGICAL     BRANCH, NEW
c EOS mode: bit values
        data BIN/Z'1000'/,XEOS/Z'800'/,REOS/Z'400'/
c Timeout values
        data TNONE/0/,T10us/1/,T30us/2/,T100us/3/,T300us/4/
        data T1ms/5/,T3ms/6/,T10ms/7/,T30ms/8/,T100ms/9/
        data T300ms/10/,T1s/11/,T3s/12/,T10s/13/,T30s/14/
        data T100s/15/,T300s/16/,T1000s/17/
        data T100s/15/,LF/10/
C
C       GIVE ONLINE INSTRUCTIONS TO USER
        WRITE (*,*)' TO RUN, THE FOLLOWING FILES MUST BE SUPPLIED:'
        WRITE (*,*)' "HARDWARE.DAT" CONTAINS SYSTEM MEASUREMENTS:'
        WRITE (*,*)' FACTOR (1.0),'
```

```
      WRITE (*,*)' HORIZ DISTANCE TO BEAM ORIGIN FROM PANEL CENTER,'
      WRITE (*,*)' VERT DISTANCE TO BEAM ORIGIN FROM PANEL CENTER,'
      WRITE (*,*)' HORIZ DISTANCE, STEERING TO TRANSFER MIRROR,'
      WRITE (*,*)' VERT DISTANCE, STEERING TO TRANSFER MIRROR,'
      WRITE (*,*)' Z DISTANCE, STEERING TO TRANSFER MIRROR,'
      WRITE (*,*)' ALL DISTANCES IN CM UNITS'
      WRITE (*,*)' "DISPLAY" CONTAINS THE COMMAND "V 0[CR]"'
      WRITE (*,*)' "RATE.DAT" CONTAINS A,R,S,F GONIOMETER PARAMETERS:'
      WRITE (*,*)' "A[CR]R 250[CR]S 2[CR]F 20[CR]"'
      OPEN (20, FILE='DECODE.DAT', STATUS='OLD')
      CALL SETUP (F,R,SH,MH,XP,YP)
      XAXIS= IBFIND ('XAXIS')
      YAXIS= IBFIND ('YAXIS')
      GP= IBFIND ('GPIB2')
C     ASK USER TO SELECT DATA ENTRY MODE
      WRITE (*, *) '                '
      WRITE (*, *) ' ENTER (1) FOR KEYBOARD, (2) FOR IEEE DATA BUS'
      READ (*, *) ENTRY
C     PERFORM DEVICE CONNECTION CHECK
      WRITE (*,*)' THE FOLLOWING TWO RESPONSES SHOULD BE "48"'
      WRITE (*,*)' IF THEY ARE OTHERWISE, POWER DOWN SYSTEM'
      CALL IBRSP (XAXIS, SPR)
      WRITE (*, *) SPR
      IF (SPR.NE.48) GO TO 1000
      CALL IBRSP (YAXIS, SPR)
      WRITE (*, *) SPR
      IF (SPR.NE.48) GO TO 1000
C     LOOP HERE
1     CALL LOC (F,IX,IY,DN,R,SH,MH,BRANCH,XP,YP,SE,ENTRY,GP)
      IF (IX .LT. 0) GO TO 100
      GO TO 110
100   S$='-'//CHAR(13)
      T$='+' //CHAR(13)
      GO TO 150
110   S$='+'//CHAR(13)
      T$='-'//CHAR(13)
150   IF (IY .LT. 0) GO TO 200
      GO TO 210
200   U$='-'//CHAR(13)
      V$='+'//CHAR(13)
      GO TO 250
210   U$='+'//CHAR(13)
      V$='-'//CHAR(13)
250   G$='G'//CHAR(13)
      IF (BRANCH) GOTO 6
      CALL MOVE2 (IX, IY, XAXIS, YAXIS, S$, T$, U$, V$, G$)
      GOTO 7
6     CALL MOVE1 (IX, IY, XAXIS, YAXIS, S$, T$, U$, V$, G$)
7     CALL POS (SE,DN,XAXIS,YAXIS,GP,IX,IY,ENTRY)
C     GO TO HOME
      IF (BRANCH) GOTO 8
```

```
      CALL MOVE2 (IX, IY, XAXIS, YAXIS, T$, S$, V$, U$, G$)
      GOTO 9
8     CALL MOVE1 (IX, IY, XAXIS, YAXIS, T$, S$, V$, U$, G$)
9     IF (ENTRY.EQ.3) GOTO 10
      GOTO 1
1000  WRITE (*, 1001)
1001  FORMAT (' DEVICE CHECK FAILURE ')
3     FORMAT (3A)
5     FORMAT (L1)
10    STOP
      END
C     ************************************************************
C     ************************************************************
C     ************************************************************
      SUBROUTINE LOC (F,IX,IY,DN,R,SH,MH,BRANCH,XP,YP,SE,ENTRY,GP)
C     ROUTINE TAKES MEASURED GONIOMETER PARAMETER AND CALCULATES
C     PHI, DELTA FOR GIVEN SENSOR
      REAL CD, SD, NN, RR, D
      REAL R(3), N(3), RH(3), SH(3), NH(3), MH(3)
      REAL X, X1, X2, A, B, DL, PH
      REAL XW, YW, P, XP, YP
      INTEGER*2 DN, I, F, IX, IY, SE
      INTEGER*2 ENTRY, DUM, IAX, IAY
      INTEGER*2 IBRD, IBWRT, IBFIND
      INTEGER      GP
      CHARACTER*2  UV, IR
      CHARACTER*4 MESSAGE
      CHARACTER*6 FNAME, POWER
      CHARACTER*11 LIST
      LOGICAL      BRANCH
      IF (ENTRY.EQ.1) THEN
C     ASK WHICH TYPE OF SENSOR IS SOUGHT
50    WRITE (*, 5)
      READ (*, 6) SE
      WRITE (*, 107)
      READ (*, *) DN
      END IF
      IF (ENTRY.EQ.2) THEN
      CALL IBRD (GP, POWER, 6)
      WRITE (*, *) ' DATA READ FROM BUS 1'
      CALL DECODE (POWER, SE, IAX, IAY, DN)
      WRITE (*, *) SE, DN
      MESSAGE= 'INIT'
      CALL ENCODE (IAX, IAY, SE, MESSAGE, LIST)
      WRITE (*, *) LIST
      CALL IBWRT (GP, LIST, 11)
      END IF
      CLOSE (7)
      IF (SE.LE.3.AND.SE.GT.0) THEN
      FNAME= 'UV.DAT'
      ELSE IF (SE.EQ.4.OR.SE.EQ.5) THEN
```

```
      FNAME= 'IR.DAT'
      ELSE
      GO TO 50
      END IF
      OPEN (7, FILE= FNAME, STATUS= 'OLD')
C
52    READ (7,*) I, YW, XW
      IF (DN.EQ.I) GO TO 53
      GO TO 52
53    CLOSE (7)
      R(1)= XW / F
      R(1)= R(1) - XP
      R(2)= YW / F
      R(2)= R(2) - YP
      RR= SQRT (R(1)**2 + R(2)**2 + R(3)**2)
      DO 55 I=1,3
      RH(I)= R(I) / RR
55    CONTINUE
C
C     COMPUTE REQUIRED GONIOMETER MIRROR NORMAL, EQS 1-3
      DO 60 I=1,3
      N(I)= (RH(I) + SH(I)) /2
60    CONTINUE
      NN= SQRT(N(1)**2 + N(2)**2 + N(3)**2)
      DO 65 I=1,3
      NH(I)= N(I) / NN
65    CONTINUE
C
C     COMPUTE DELTA, EQN 19
      D= SQRT (1 - MH(1)**2)
      X= NH(2) / D
      X1= ACOS(X)
      X= MH(2) / D
      X2= ACOS(X)
      DL= X2 -X1
      SD= SIN (DL)
      CD= COS (DL)
      DL= DL * 180 / 3.14159
C     COMPUTE PHI, EQN 24B
      A= MH(1)
      B= MH(2)*SD + MH(3)*CD
      X1= B*NH(1) - A*NH(3)
      X2= A*NH(1) + B*NH(3)
      P= (X1 / X2)
      PH= ATAN (X1/X2)
C     CHANGE SIGN OF PHI, GONIOMETER USES POS VALUES FOR CW
      PH= -PH * 180 / 3.14159
C     CONVERT TO GONIOMETER COUNTS WITH ROUNDING
      WRITE (*, 111) PH, DL
      DL= DL * 100.0
      PH= PH * 100.0
```

```
      IY= ANINT(DL)
      IX= ANINT(PH)
      IF (IX.GT.-100.AND.IX.LT.100) BRANCH= .TRUE.
      IF (IX.GE.100.OR.IX.LE.-100) BRANCH= .FALSE.
      WRITE (*, 110) IX, IY
2     FORMAT (A)
5     FORMAT (' IS SENSOR AR(1),UVH(2),UVL(3),IRH(4),IRL(5)? '/)
6     FORMAT (I1)
107   FORMAT (' DETECTOR NUMBER: ')
110   FORMAT (' NUMBER OF X STEPS ', I5 , ' NUMBER OF Y STEPS ', I5)
111   FORMAT (' AZIMUTH (DEG)', F6.2 , ' ELEVATION (DEG) ', F6.2)
      RETURN
      END
C     ************************************************************
C     ************************************************************
      SUBROUTINE SETUP (F,R,SH,MH,XP,YP)
C     ROUTINE GETS SCALING FACTOR, GONIOMETER POSTIONS REQUIRED
C     FOR COMPUTATIONS
      INTEGER*2 F
      INTEGER*2 RL
      REAL DTR, PH, DL, CD, SD, CP
      REAL SP, SS, MM, RR, NN, XP, YP
      REAL S(3), M(3), SH(3), R(3)
      REAL RH(3), N(3), NH(3), MH(3)
      RL= 30
      OPEN (2,FILE='OAR.DAT',ACCESS='DIRECT',RECL=RL,
     / FORM='FORMATTED', STATUS= 'OLD')
      OPEN (3,FILE='UVH.DAT',ACCESS='DIRECT',RECL=RL,
     / FORM='FORMATTED', STATUS= 'OLD')
      OPEN (4,FILE='UVL.DAT',ACCESS='DIRECT',RECL=RL,
     / FORM='FORMATTED', STATUS= 'OLD')
      OPEN (8,FILE='IRH.DAT',ACCESS='DIRECT',RECL=RL,
     / FORM='FORMATTED', STATUS= 'OLD')
      OPEN (9,FILE='IRL.DAT',ACCESS='DIRECT',RECL=RL,
     / FORM='FORMATTED', STATUS= 'OLD')
      OPEN (10, FILE= 'HARDWARE.DAT', STATUS= 'OLD')
      READ (10, *) F, XP, YP, S(1), S(2), S(3), PH, DL
C     ITERATIVE MIRROR NORMAL SOLUTION
C     RUNS 500 ITERATIONS
      DTR= 3.14159 / 180

C     INPUT STEERING MIRROR COORDINATES
C     INPUT GONIOMETER ANGLES AT R=(0, 0, -1)
C     CONVERT TO RADIANS, COMPUTE TRIG FUNCTIONS
      DL= DL * DTR
      PH= PH * DTR
      CD= COS (DL)
      SD= SIN (DL)
      CP= COS (PH)
      SP= SIN (PH)
```

```
C       NORMALIZE STEERING MIRROR VECTOR
        SS= SQRT(S(1)**2 + S(2)**2 + S(3)**2)
        DO 10 I=1,3
        S(I)= S(I) / SS
10      CONTINUE
        DO 25 J=1, 500
C       CALCULATE GONIOMETER MIRROR NORMAL
        MM= SQRT (2* (1-S(3)))
        M(1)= (S(1)*CP - (S(3)-1)*SP)/MM
        M(2)= (S(1)*SP*SD + S(2)*CD + (S(3)-1)*CP*SD)/MM
        M(3)= (S(1)*SP*SD - S(2)*SD + (S(3)-1)*CP*CD)/MM

C       COMPUTE NEW S FROM CALCULATED GONIOMETER MIRROR NORMAL
C       AND MEASURED PHI, DELTA
        S(1)= M(1) * CP + M(2) * SP * SD + M(3) * SP * CD
        S(2)=             M(2) * CD      - M(3) * SD
        S(3)=-M(1) * SP + M(2) * CP * SD + M(3) * CP * CD
25      CONTINUE
C
C       COMPUTE REST MIRROR NORMAL N0 FROM STEERING MIRROR
C       AND TARGET VECTORS
        SS=SQRT (S(1)**2 + S(2)**2 + S(3)**2)
        DO 30 I=1,3
        SH(I)= S(I) / SS
30      CONTINUE
C       INPUT AND NORMALIZE TARGET VECTOR
        R(1)= 0.0
        R(2)= 0.0
        R(3)= -1.0
        RR= 1.0
C       READ (*, *) R(1), R(2), R(3)
C       RR= SQRT (R(1)**2 + R(2)**2 + R(3)**2)
        DO 35 I=1,3
        RH(I)= R(I) / RR
35      CONTINUE
C       COMPUTE REQUIRED GONIOMETER MIRROR VECTOR FROM EQS 1-3
        DO 40 I=1,3
        N(I)= (RH(I) + SH(I)) / 2
40      CONTINUE
        NN= SQRT(N(I)**2 + N(2)**2 + N(3)**2)
        DO 45 I=1,3
        NH(I)= N(I) / NN
45      CONTINUE
        DL= 0
        PH= 0
        SD= SIN (DL)
        CD= COS (DL)
        SP= SIN (PH)
        CP= COS (PH)
C
C       APPLY INVERSE OF TRANSFORMATION IN EQS 8,10
```

```
      MH(1)= NH(1) * CP                - NH(3) * SP
      MH(2)= NH(1) * SP * SD + NH(2) * CD + NH(3) * CP * SD
      MH(3)= NH(1) * SP * CD - NH(2) * SD + NH(3) * CP * CD
C
C     COMPUTE GONIOMETER ANGLES TO GIVEN TARGET COORDINATES
      M(1)= MH(1)
      M(2)= MH(2)
      M(3)= MH(3)
      MM= SQRT (M(1)**2 + M(2)**2 + M(3)**2)
      DO 50 I=1,3
      MH(I)= M(I) / MM
50    CONTINUE
C
C     WRITE (*, 108)
      READ (10, *) R(3)
11    FORMAT (A)
12    FORMAT (I2)
      RETURN
      END
C     ************************************************************
C     ************************************************************
      SUBROUTINE POS (SE,DN,XAXIS,YAXIS,GP,PL,DL,ENTRY)
      INTEGER          XAXIS,YAXIS,GP
      INTEGER     DN
      INTEGER*2   TIMO, RN, SE, ENTRY,IPH,IDL
      INTEGER*2   PL, DL, PM, DM, PS, DS, PD, DD
      INTEGER*2   IBWRT, IBRD
C     PL, DL ARE PHI, DELTA OF LOCUS
C     PM, DM ARE PHI, DELTA OF MANUAL POSITION
C     PS, DS ARE PHI, DELTA OF SCANNED MAXIMUM
C     PD, DD ARE PHI, DELTA DIFFERENCES
      LOGICAL     BRANCH
      CHARACTER*2      S$, U$, G$
      CHARACTER*6      PAUSE
      CHARACTER*7  BUFX, BUFY
      CHARACTER*9  CONV
      LOGICAL          FLAG, FLAF
      LOGICAL          OP
      CHARACTER*10     DRT, FVAR
      CHARACTER*11     LIST
      INTEGER          RCL
      FLAF=.FALSE.
C     ASK USER TO MANUALLY POSITION GONIOMETER
      WRITE (*, 3)
      IF (ENTRY.EQ.1) THEN
      PAUSE
      GOTO 20
      END IF
      CALL IBRD (GP, PAUSE, 6)
      LIST='#'//'99'//':'//'7'//'&'//'REDI'//'@'
      CALL IBWRT (GP, LIST, 11)
```

```
C       SCAN ACROSS SENSOR TO IDENTIFY POSITION OF MAX IRRADIANCE
20      CALL SCAN (XAXIS, YAXIS, GP, PD, DD, ENTRY)
C       SCAN RETURNS VALUES PS, DS DISTANCES TO MAXIMUM
        FLAG=.FALSE.
C       NOW MOVE TO MAXIMUM
        GO TO 50
55      CONTINUE
C       IPH=-10
C       IDL=10
C       S$='-'//CHAR(13)
C       U$='+'//CHAR(13)
C       G$='G'//CHAR(13)
C       CALL IBCLR (XAXIS)
C       CALL IBCLR (YAXIS)
C       CALL MOVE1 (IPH, IDL, XAXIS, YAXIS, S$, T$, U$, V$, G$)
        CALL IBCLR (XAXIS)
        CALL IBCLR (YAXIS)
        CALL IBWRTF (XAXIS, 'DISPLAY')
        CALL IBWRTF (YAXIS, 'DISPLAY')
        CALL IBWAIT (XAXIS, TIMO)
        CALL IBWAIT (YAXIS, TIMO)
        CALL IBRD (XAXIS, BUFX, 9)
        CALL IBRD (YAXIS, BUFY, 9)
        RN= DN
        IF (SE.EQ.1) WRITE (2, 5, REC=RN) DN, BUFX, BUFY
        IF (SE.EQ.2) WRITE (3, 5, REC=RN) DN, BUFX, BUFY
        IF (SE.EQ.3) WRITE (4, 5, REC=RN) DN, BUFX, BUFY
        IF (SE.EQ.4) WRITE (8, 5, REC=RN) DN, BUFX, BUFY
        IF (SE.EQ.5) WRITE (9, 5, REC=RN) DN, BUFX, BUFY
C       READ CHAR STRING INTO INTEGER FORMAT
        WRITE (CONV, 7) BUFX
        READ (CONV, 8) PS
        WRITE (CONV, 7) BUFY
        READ (CONV, 8) DS
        WRITE (*, 1003) PS, DS
        FLAG=.TRUE.
        FLAF=.FALSE.
        PD= PL - PS
        DD= DL - DS
50      IF (PD.GT.-100.AND.PD.LT.100) BRANCH= .TRUE.
        IF (PD.GE.100.OR.PD.LE.-100) BRANCH= .FALSE.
        IF (PD .LT. 0) GO TO 100
        GO TO 110
100     S$='-'//CHAR(13)
        GO TO 150
110     S$='+'//CHAR(13)
150     IF (DD .LT. 0) GO TO 200
        GO TO 210
200     U$='-'//CHAR(13)
        GO TO 250
210     U$='+'//CHAR(13)
```

```
250     G$='G'//CHAR(13)
        IF (FLAF) GOTO 51
        IF (FLAG) THEN
        WRITE (*, 6)
        IF (ENTRY.EQ.1) THEN
        PAUSE
        GOTO 21
        END IF
        CALL IBRD (GP, PAUSE, 6)
        LIST= '#'//'99'//':'//'7'//'&'//'REDI'//'@'
        CALL IBWRT (GP, LIST, 11)
21      WRITE (*, 1002) PL, PS, PD
        WRITE (*, 1002) DL, DS, DD
        FLAF=.TRUE.
        GOTO 50
        END IF
51      IF (BRANCH) GO TO 9
        CALL MOVE2 (PD,DD,XAXIS,YAXIS,S$,T$,U$,V$,G$)
        IF (FLAG) GOTO 10
        GOTO 55
9       CALL MOVE1 (PD,DD,XAXIS,YAXIS,S$,T$,U$,V$,G$)
        IF (FLAG) GOTO 10
        GOTO 55
2       FORMAT (I1)
3       FORMAT ('0MANUALLY POSITION GONIOMETER TO DESCRIBED TARGET '/)
5       FORMAT (I5,2A9)
6       FORMAT (' WAITING TO RETURN TO HOME POSITION '/)
7       FORMAT (A9)
8       FORMAT (I9)
1000    FORMAT ('  ',2A9)
1002    FORMAT (' LOCUS:  ', I5, '  SENSOR:  ', I5, '  DIFFERENCE:  ', I5)
1003    FORMAT (' X POS OF MAX: ', I5, ' Y POS OF MAX: ',I5)
10      RETURN
        END
C       ****************************************************
C       ****************************************************
        SUBROUTINE MOVE1 (IX,IY,XAXIS,YAXIS,S$,T$,U$,V$,G$)
C       ROUTINE TAKES RETURNED STEP COUNTS AND DIRECTS CONTROLLER
C       TO MOVE GONIOMETER TO SELECTED TARGET
C       THE FOLLOWING IS GPIB PROFESSIONAL FORTRAN HEADER
        integer*2  ibclr
        integer*2  ibrd
        integer*2  ibwrt, TIMO, END
        integer*2  BIN, XEOS, REOS, LF, S, CMPL
        INTEGER*2  TNONE, T10us,T30us,T100us,T300us
        INTEGER*2  T1ms,T3ms,T10ms,T30ms,T100ms
        INTEGER*2  T300ms,T1s,T3s,T10s,T30s
        INTEGER*2  T100s,T300s,T1000s
        REAL          XSTEPS, YSTEPS, PH, DL
        INTEGER     XAXIS, YAXIS, IOUT
        INTEGER*2   DN, A, L, K, J
```

```
      INTEGER*2   IXX, IYY, IX, IY
      CHARACTER*1       N$
      CHARACTER*2       S$, T$, U$, V$, G$, BAD
      CHARACTER*4       X4$, Y4$
      CHARACTER*5       X3$, Y3$
      CHARACTER*6       X$, Y$, X1$, Y1$
      CHARACTER*7       X2$, Y2$
      CHARACTER*8       RATE

c GPIB Commands: values
      DATA TIMO/Z'4000'/, END/Z'2000'/
c Iberr error messages: values
c  EOS mode: bit values
      data BIN/Z'1000'/,XEOS/Z'800'/,REOS/Z'400'/
c  Timeout values
      data TNONE/0/,T10us/1/,T30us/2/,T100us/3/,T300us/4/
      data T1ms/5/,T3ms/6/,T10ms/7/,T30ms/8/,T100ms/9/
      data T300ms/10/,T1s/11/,T3s/12/,T10s/13/T30s/14/
      data T100s/15/,T300s/16/,T1000s/17/
      data S/08/, LF/10/
      RATE= 'RATE.DAT'
      A= DN
1     FORMAT (' OUTPUT DATA FILE NAME: ')
11    FORMAT (A)
16    FORMAT (I4)
17    FORMAT (I3)
18    FORMAT (I2)
19    FORMAT (I1)
C     RATE IS THE FILE WHICH CONTAINS A,R,S,F STATEMENTS
      CALL IBCLR (XAXIS)
      CALL IBWRTF (XAXIS,RATE)
      CALL IBCLR (YAXIS)
      CALL IBWRTF (YAXIS,RATE)
C
      IXX=IABS(IX)
      IYY=IABS(IY)
      N$='N'
      IF (IXX.LT.1000 .AND. IXX .GE. 100) WRITE(X$,17) IXX
      IF (IXX.GE.1000) WRITE(X$,16) IXX
      IF (IYY.LT.1000 .AND. IYY .GE. 100) WRITE(Y$,17) IYY
      IF (IYY.GE.1000) WRITE(Y$,16) IYY
      IF (IXX.LT.100.AND.IXX.GE.10) WRITE (X$,18) IXX
      IF (IYY.LT.100.AND.IYY.GE.10) WRITE (Y$,18) IYY
      IF (IXX.LT.10) WRITE (X$, 19) IXX
      IF (IYY.LT.10) WRITE (Y$, 19) IYY
      IF (IXX.EQ.0) X$='00'
      IF (IYY.EQ.0) Y$='00'
      X1$=N$//' '//X$(1:3)//CHAR(13)
      X2$=N$//' '//X$(1:4)//CHAR(13)
      X3$=N$//' '//X$(1:2)//CHAR(13)
      X4$=N$//' '//X$(1:1)//CHAR(13)
```

```
      Y1$=N$//' '//Y$(1:3)//CHAR(13)
      Y2$=N$//' '//Y$(1:4)//CHAR(13)
      Y3$=N$//' '//Y$(1:2)//CHAR(13)
      Y4$=N$//' '//Y$(1:1)//CHAR(13)
      IF(IXX.LT.100.AND.IXX.GE.10.AND.IYY.LT.100.AND.IYY.GE.10) GOTO 800
      IF (IXX.LT.100.AND.IXX.GE.10.AND.IYY.GE.1000) GO TO 900
      IF(IXX.LT.100.AND.IXX.GE.10.AND.IYY.GE.100.AND.IYY.LT.1000)GOTO 12
      IF (IXX.LT.10.AND.IYY.LT.10) GO TO 1300
      IF (IXX.LT.10.AND.IYY.GE.10.AND.IYY.LT.100) GO TO 1400
      IF (IXX.LT.10.AND.IYY.GE.100.AND.IYY.LT.1000) GO TO 1500
      IF (IXX.LT.10.AND.IYY.GE.1000) GO TO 1600
      IF (IXX.GE.10.AND.IXX.LT.100.AND.IYY.LT.10) GO TO 1700
800   CALL IBCLR(XAXIS)
      CALL IBWRT(XAXIS,X3$,5)
      CALL IBWRT(XAXIS,S$,2)
      CALL IBWRT(XAXIS,G$,2)
C     Y AXIS MOVEMENT
      CALL IBWAIT (XAXIS, TIMO)
      CALL IBCLR(YAXIS)
      CALL IBWRT(YAXIS,Y3$,5)
      CALL IBWRT(YAXIS,U$,2)
      CALL IBWRT(YAXIS,G$,2)
      GO TO 300
C     X AXIS MOVEMENT
900   CALL IBCLR(XAXIS)
      CALL IBWRT(XAXIS,X3$,5)
      CALL IBWRT(XAXIS,S$,2)
      CALL IBWRT(XAXIS,G$,2)
C     Y AXIS MOVEMENT
      CALL IBWAIT (XAXIS, TIMO)
      CALL IBCLR(YAXIS)
      CALL IBWRT(YAXIS,Y2$,7)
      CALL IBWRT(YAXIS,U$,2)
      CALL IBWRT(YAXIS,G$,2)
      GO TO 300
C     X AXIS MOVEMENT
12    CALL IBCLR(XAXIS)
      CALL IBWRT(XAXIS,X3$,5)
      CALL IBWRT(XAXIS,S$,2)
      CALL IBWRT(XAXIS,G$,2)
C     Y AXIS MOVEMENT
      CALL IBWAIT (XAXIS, TIMO)
      CALL IBCLR(YAXIS)
      CALL IBWRT(YAXIS,Y1$,6)
      CALL IBWRT(YAXIS,U$,2)
      CALL IBWRT(YAXIS,G$,2)
      GO TO 300
C     X AXIS MOVEMENT
1300  CALL IBCLR(XAXIS)
      CALL IBWRT(XAXIS,X4$,4)
      CALL IBWRT(XAXIS,S$,2)
```

```
      CALL IBWRT(XAXIS,G$,2)
C     Y AXIS MOVEMENT
      CALL IBWAIT (XAXIS, TIMO)
      CALL IBCLR(YAXIS)
      CALL IBWRT(YAXIS,Y4$,4)
      CALL IBWRT(YAXIS,U$,2)
      CALL IBWRT(YAXIS,G$,2)
      GO TO 300
C     X AXIS MOVEMENT
1400  CALL IBCLR(XAXIS)
      CALL IBWRT(XAXIS,X4$,4)
      CALL IBWRT(XAXIS,S$,2)
      CALL IBWRT(XAXIS,G$,2)
C     Y AXIS MOVEMENT
      CALL IBWAIT (XAXIS, TIMO)
      CALL IBCLR(YAXIS)
      CALL IBWRT(YAXIS,Y3$,5)
      CALL IBWRT(YAXIS,U$,2)
      CALL IBWRT(YAXIS,G$,2)
      GO TO 300
C     X AXIS MOVEMENT
1500  CALL IBCLR(XAXIS)
      CALL IBWRT(XAXIS,X4$,4)
      CALL IBWRT(XAXIS,S$,2)
      CALL IBWRT(XAXIS,G$,2)
C     Y AXIS MOVEMENT
      CALL IBWAIT (XAXIS, TIMO)
      CALL IBCLR(YAXIS)
      CALL IBWRT(YAXIS,Y1$,6)
      CALL IBWRT(YAXIS,U$,2)
      CALL IBWRT(YAXIS,G$,2)
      GO TO 300
C     X AXIS MOVEMENT
1600  CALL IBCLR(XAXIS)
      CALL IBWRT(XAXIS,X4$,4)
      CALL IBWRT(XAXIS,S$,2)
      CALL IBWRT(XAXIS,G$,2)
C     Y AXIS MOVEMENT
      CALL IBWAIT (XAXIS, TIMO)
      CALL IBCLR(YAXIS)
      CALL IBWRT(YAXIS,Y2$,7)
      CALL IBWRT(YAXIS,U$,2)
      CALL IBWRT(YAXIS,G$,2)
      GO TO 300
C     X AXIS MOVEMENT
1700  CALL IBCLR(XAXIS)
      CALL IBWRT(XAXIS,X3$,5)
      CALL IBWRT(XAXIS,S$,2)
      CALL IBWRT(XAXIS,G$,2)
C     Y AXIS MOVEMENT
      CALL IBWAIT (XAXIS, TIMO)
```

```
      CALL IBCLR(YAXIS)
      CALL IBWRT(YAXIS,Y4$,4)
      CALL IBWRT(YAXIS,U$,2)
      CALL IBWRT(YAXIS,G$,2)
      GO TO 300
C     X AXIS MOVEMENT
300   CONTINUE
      RETURN
      END
C     ***************************************************
C     ***************************************************
      SUBROUTINE MOVE2 (IX,IY,XAXIS,YAXIS,S$,T$,U$,V$,G$)
C     ROUTINE TAKES RETURNED STEP COUNTS AND DIRECTS CONTROLLER
C     TO MOVE GONIOMETER TO SELECTED TARGET
C     THE FOLLOWING IS GPIB PROFESSIONAL FORTRAN HEADER
      integer*2  ibclr
      integer*2  ibrd
      integer*2  ibwrt
      integer*2  BIN, XEOS, REOS, TIMO, END, S, LF
      INTEGER*2  TNONE, T10us,T30us,T100us,T300us
      INTEGER*2  T1ms,T3ms,T10ms,T30ms,T100ms
      INTEGER*2  T300ms,T1s,T3s,T10s,T30s
      INTEGER*2  T100s,T300s,T1000s
      REAL          XSTEPS, YSTEPS, PH, DL
      INTEGER     XAXIS, YAXIS, IOUT
      INTEGER*2   DN, A, L, K, J
      INTEGER*2   IXX, IYY, IX, IY
      CHARACTER*1      N$
      CHARACTER*2      S$, T$, U$, V$, G$, BAD
      CHARACTER*4      X4$, Y4$
      CHARACTER*5      X3$, Y3$
      CHARACTER*6      X$, Y$, X1$, Y1$
      CHARACTER*7      X2$, Y2$
      CHARACTER*8      RATE

c GPIB Commands: values
      DATA  TIMO/Z'4000'/, END/Z'2000'/
c Iberr error messages: values
c  EOS mode: bit values
      data BIN/Z'1000'/,XEOS/Z'800'/,REOS/Z'400'/
c  Timeout values
      data TNONE/0/,T10us/1/,T30us/2/,T100us/3/,T300us/4/
      data T1ms/5/,T3ms/6/,T10ms/7/,T30ms/8/,T100ms/9/
      data T300ms/10/,T1s/11/,T3s/12/,T10s/13/T30s/14/
      data T100s/15/,T300s/16/,T1000s/17/
      data S/08/, LF/10/
      RATE= 'RATE.DAT'
      A= DN
11    FORMAT (A)
16    FORMAT (I4)
17    FORMAT (I3)
```

```
18      FORMAT (I2)
19      FORMAT (I1)
C       RATE IS THE FILE WHICH CONTAINS A,R,S,F STATEMENTS
        CALL IBCLR (XAXIS)
        CALL IBWRTF (XAXIS,RATE)
        CALL IBCLR (YAXIS)
        CALL IBWRTF (YAXIS,RATE)
C
        IXX=IABS(IX)
        IYY=IABS(IY)
        N$='N'
        IF (IXX.LT.1000 .AND. IXX .GE. 100) WRITE(X$,17) IXX
        IF (IXX.GE.1000) WRITE(X$,16) IXX
        IF (IYY.LT.1000 .AND. IYY .GE. 100) WRITE(Y$,17) IYY
        IF (IYY.GE.1000) WRITE(Y$,16) IYY
        IF (IXX.LT.100.AND.IXX.GE.10) WRITE (X$,18) IXX
        IF (IYY.LT.100.AND.IXX.GE.10) WRITE (Y$,18) IYY
        IF (IXX.LT.10) WRITE (X$, 19) IXX
        IF (IYY.LT.10) WRITE (Y$, 19) IYY
        IF (IXX.EQ.0) X$='00'
        IF (IYY.EQ.0) Y$='00'
        X1$=N$//' '//X$(1:3)//CHAR(13)
        X2$=N$//' '//X$(1:4)//CHAR(13)
        X3$=N$//' '//X$(1:2)//CHAR(13)
        X4$=N$//' '//X$(1:1)//CHAR(13)
        Y1$=N$//' '//Y$(1:3)//CHAR(13)
        Y2$=N$//' '//Y$(1:4)//CHAR(13)
        Y3$=N$//' '//Y$(1:2)//CHAR(13)
        Y4$=N$//' '//Y$(1:1)//CHAR(13)
        IF (IXX.LT.1000.AND.IXX.GE.100.AND.IYY.GE.1000) GO TO 500
        IF (IXX.GE.1000.AND.IYY.LT.1000.AND.IYY.GE.100) GO TO 600
        IF (IXX .GE. 1000 .AND. IYY .GE. 1000) GO TO 700
        IF(IXX.GE.100.AND.IXX.LT.1000.AND.IYY.LT.100.AND.IYY.GE.10)GOTO 10
        IF (IXX.GE.1000.AND.IYY.LT.100.AND.IYY.GE.10) GO TO 1100
        IF (IXX.GE.100.AND.IXX.LT.1000.AND.IYY.LT.10) GO TO 1800
        IF (IXX.GE.1000.AND.IYY.LT.10) GO TO 1900
        IF(IXX.LT.1000.AND.IXX.GE.100.AND.IYY.LT.1000.AND.IYY.GE.100)
     /  GOTO 20
C       X AXIS MOVEMENT
500     CALL IBCLR(XAXIS)
        CALL IBWRT(XAXIS,X1$,6)
        CALL IBWRT(XAXIS,S$,2)
        CALL IBWRT(XAXIS,G$,2)
C       Y AXIS MOVEMENT
        CALL IBWAIT (XAXIS, TIMO)
        CALL IBCLR(YAXIS)
        CALL IBWRT(YAXIS,Y2$,7)
        CALL IBWRT(YAXIS,U$,2)
        CALL IBWRT(YAXIS,G$,2)
        GO TO 300
C       X AXIS MOVEMENT
```

```
600     CALL IBCLR(XAXIS)
        CALL IBWRT(XAXIS,X2$,7)
        CALL IBWRT(XAXIS,S$,2)
        CALL IBWRT(XAXIS,G$,2)
C       Y AXIS MOVEMENT
        CALL IBWAIT (XAXIS, TIMO)
        CALL IBCLR(YAXIS)
        CALL IBWRT(YAXIS,Y1$,6)
        CALL IBWRT(YAXIS,U$,2)
        CALL IBWRT(YAXIS,G$,2)
2       GO TO 300
C       X AXIS MOVEMENT
700     CALL IBCLR(XAXIS)
        CALL IBWRT(XAXIS,X2$,7)
        CALL IBWRT(XAXIS,S$,2)
        CALL IBWRT(XAXIS,G$,2)
C       Y AXIS MOVEMENT
        CALL IBWAIT (XAXIS, TIMO)
        CALL IBCLR(YAXIS)
        CALL IBWRT(YAXIS,Y2$,7)
        CALL IBWRT(YAXIS,U$,2)
        CALL IBWRT(YAXIS,G$,2)
        GO TO 300
C       X AXIS MOVEMENT
10      CALL IBCLR(XAXIS)
        CALL IBWRT(XAXIS,X1$,6)
        CALL IBWRT(XAXIS,S$,2)
        CALL IBWRT(XAXIS,G$,2)
C       Y AXIS MOVEMENT
        CALL IBWAIT (XAXIS, TIMO)
        CALL IBCLR(YAXIS)
        CALL IBWRT(YAXIS,Y3$,5)
        CALL IBWRT(YAXIS,U$,2)
        CALL IBWRT(YAXIS,G$,2)
        GO TO 300
C       X AXIS MOVEMENT
1100    CALL IBCLR(XAXIS)
        CALL IBWRT(XAXIS,X2$,7)
        CALL IBWRT(XAXIS,S$,2)
        CALL IBWRT(XAXIS,G$,2)
C       Y AXIS MOVEMENT
        CALL IBWAIT (XAXIS, TIMO)
        CALL IBCLR(YAXIS)
        CALL IBWRT(YAXIS,Y3$,5)
        CALL IBWRT(YAXIS,U$,2)
        CALL IBWRT(YAXIS,G$,2)
        GO TO 300
C       X AXIS MOVEMENT
1800    CALL IBCLR(XAXIS)
        CALL IBWRT(XAXIS,X1$,6)
        CALL IBWRT(XAXIS,S$,2)
```

```
      CALL IBWRT(XAXIS,G$,2)
C     Y AXIS MOVEMENT
      CALL IBWAIT (XAXIS, TIMO)
      CALL IBCLR(YAXIS)
      CALL IBWRT(YAXIS,Y4$,4)
      CALL IBWRT(YAXIS,U$,2)
      CALL IBWRT(YAXIS,G$,2)
      GO TO 300
C     X AXIS MOVEMENT
1900  CALL IBCLR(XAXIS)
      CALL IBWRT(XAXIS,X2$,7)
      CALL IBWRT(XAXIS,S$,2)
      CALL IBWRT(XAXIS,G$,2)
C     Y AXIS MOVEMENT
      CALL IBWAIT (XAXIS, TIMO)
      CALL IBCLR(YAXIS)
      CALL IBWRT(YAXIS,Y4$,4)
      CALL IBWRT(YAXIS,U$,2)
      CALL IBWRT(YAXIS,G$,2)
      GO TO 300
C     X AXIS MOVEMENT
20    CALL IBCLR(XAXIS)
      CALL IBWRT(XAXIS,X1$,6)
      CALL IBWRT(XAXIS,S$,2)
      CALL IBWRT(XAXIS,G$,2)
C     Y AXIS MOVEMENT
      CALL IBWAIT (XAXIS, TIMO)
      CALL IBCLR(YAXIS)
      CALL IBWRT(YAXIS,Y1$,6)
      CALL IBWRT(YAXIS,U$,2)
      CALL IBWRT(YAXIS,G$,2)
300   CONTINUE
      RETURN
      END
C     ***************************************************
C     ***************************************************
      SUBROUTINE SCAN (XAXIS, YAXIS, GP, IX, IY, ENTRY)
C     ROUTINE STEPS BEAM THROUGH SCANNING OF SENSOR AND DETERMINES
C     POSITION OF MAXIMUM IRRADIANCE
      INTEGER          XAXIS, YAXIS, GP
      INTEGER*2   XAR, YAR, MXAR, MYAR
      INTEGER*2   IPH, IDL, IX, IY, DUM
      INTEGER*2   IBTMO, IBCLR, IBRD, TIMO, IBWRT
      INTEGER*2   T3MS, T3S, SPR
      INTEGER*2   ITYPE, ENTRY
      REAL        ARRAY, POWVAL
      CHARACTER*2      S$, U$, G$
      CHARACTER*4      MESSAGE
      CHARACTER*6      POWER
      CHARACTER*11     LIST
      DIMENSION ARRAY (1:5, 1:5)
```

```
      DATA        T3MS/6/,T1S/11/,T3S/12/
C     PERFORM DEVICE CHECK
      CALL IBRSP (GP, SPR)
      WRITE (*, *) SPR
      IF (SPR.NE.0) GO TO 90
C     MOVE BEAM FROM MANUALLY SELECTED POSITION TO BEGINNING OF SCAN
      IPH=0
      IDL=0
      S$='-'//CHAR(13)
      U$='+'//CHAR(13)
      G$='G'//CHAR(13)
      CALL IBCLR (XAXIS)
      CALL IBCLR (YAXIS)
      CALL MOVE1 (IPH, IDL, XAXIS, YAXIS, S$, T$, U$, V$, G$)
      IF (ENTRY.EQ.1) GOTO 31
      CALL IBRD (GP, POWER, 6)
      WRITE (*, 70) POWER
      CALL DECODE (POWER, ITYPE, XAR, YAR, DN)
      MESSAGE= 'REDI'
      IF ((XAR.NE.1).OR.(YAR.NE.1)) MESSAGE='BADD'
      WRITE (*, *) 'XAR AND YAR ARE:'
      WRITE (*, *) XAR,YAR
      CALL ENCODE (XAR, YAR, ITYPE, MESSAGE, LIST)
      CALL IBWRT (GP, LIST, 11)
31    U$='-'//CHAR(13)
C     SCAN THROUGH 25 STEPS IN 5 INCREMENTS OF 5 STEPS EACH
      DO 10 J=5
      DO 20 I=1
      IF (ENTRY.EQ.1) GOTO 32
      CALL IBRD (GP, POWER, 6)
      CALL DECODE (POWER, ITYPE, XAR, YAR, DN)
      MESSAGE= 'REDI'
32    K= J/2
      IF (MOD(J,2).NE.0) THEN
      S$='+'//CHAR(13)
      M=I+1
      END IF
      IF (MOD(J,2).EQ.0) THEN
      S$='-'//CHAR(13)
      M=1-I
      END IF
      N=J/5
      IPH=0
      IDL=0
      IF (ENTRY.EQ.1) GOTO 33
      IF (XAR.NE.M.OR.YAR.NE.N) MESSAGE= 'BADD'
33    CALL MOVE1 (IPH, IDL, XAXIS, YAXIS, S$, T$, U$, V$, G$)
      IF (ENTRY.EQ.1) GOTO 20
      CALL ENCODE (XAR, YAR, ITYPE, MESSAGE, LIST)
      CALL IBWRT (GP, LIST, 11)
20    CONTINUE
```

```
      IF (J.EQ.5) GOTO 11
      IPH=0
      IDL=0
      IF (ENTRY.EQ.1) GOTO 34
      CALL IBRD (GP, POWER, 6)
      CALL DECODE (POWER, ITYPE, XAR, YAR, DN)
      MESSAGE= 'REDI'
34    N= N+1
      IF (ENTRY.EQ.1) GOTO 35
      IF (XAR.NE.M.OR.YAR.NE.N) MESSAGE= 'BADD'
35    CALL MOVE1 (IPH, IDL, XAXIS, YAXIS, S$, T$, U$, V$, G$)
      IF (ENTRY.EQ.1) GOTO 10
      CALL ENCODE (XAR, YAR, ITYPE, MESSAGE, LIST)
      CALL IBWRT (GP, LIST, 11)
10    CONTINUE
11    IF (ENTRY.EQ.1) THEN
      MXAR= 1
      MYAR= 1
      GOTO 36
      END IF
      CALL IBRD (GP, POWER, 6)
      CALL DECODE (POWER, ITYPE, MXAR, MYAR, DN)
      IF (XAR.LT.1.OR.XAR.GT.5.OR.YAR.LT.1.OR.YAR.GT.5) MESSAGE='BADD'
      IF (ITYPE.GT.9.OR.ITYPE.LT.8) MESSAGE= 'BADD'
      IF (ITYPE.EQ.9) ENTRY=3
      CALL ENCODE (MXAR, MYAR, ITYPE, MESSAGE, LIST)
      CALL IBWRT (GP, LIST, 11)
36    IX= -(5*(1-MXAR))
      IY=  (5*(1-MYAR))
      RETURN
70    FORMAT (A10)
80    FORMAT (I10)
90    WRITE (*,*) ' DEVICE CHECK ERROR'
      END
C     ************************************************************
C     ************************************************************
      SUBROUTINE DECODE (POWER, ITYPE, IDX, INY, DN)
      INTEGER*2   ITYPE, IDX, INY, DN
      CHARACTER*1       TYPE, DX, NY
      CHARACTER*6       POWER, CONV
      WRITE (20, 1) POWER
      TYPE= POWER (2:2)
      DX= POWER (4:4)
      NY= POWER (5:5)
      WRITE (CONV, 2) TYPE
      READ (CONV, 3) ITYPE
      WRITE (*, *) ITYPE
      WRITE (CONV, 2) DX
      READ (CONV, 3) IDX
      WRITE (*, *) IDX
      WRITE (CONV, 2) NY
```

```
      READ (CONV,3) INY
      WRITE (*, *) INY
      DN=IDX*10
      DN=DN+INY
      WRITE (*, *) DN
1     FORMAT (A6)
2     FORMAT (A)
3     FORMAT (I1)
      RETURN
      END
C     ********************************************************
      SUBROUTINE ENCODE (IPHI, IDEL, ITYPE, MESSAGE, LIST)
      INTEGER*2   IPHI, IDEL, ITYPE
      CHARACTER*1     PHI, DEL, TYPE, CONV
      CHARACTER*4        MESSAGE
      CHARACTER*11       LIST
      WRITE (CONV, 1) IPHI
      READ (CONV,2) PHI
      WRITE (CONV, 1) IDEL
      READ (CONV, 2) DEL
      WRITE (CONV, 1) ITYPE
      READ (CONV, 2) TYPE
      LIST= '#'//PHI//DEL//':'//TYPE//'&'//MESSAGE//'@'
      WRITE (*, 2) LIST
1     FORMAT (I1)
2     FORMAT (A)
      RETURN
      END
```

C2. Pointing Routine

```
C       FROM PROGRAM HITRGT.FOR SEPT 15, 1987
C       LINK WITH PFIB;
C       PROGRAM TO READ TARGET POSITION DATA FILES:
C       OAR.DAT, UVH.DAT, UVL.DAT, IRH.DAT, IRL.DAT,
C       FROM DATA RECEIVED FROM LACE MVAX, AND TO THEN
C       EXECUTE POSITIONING OF LASER BEAM ON GIVEN TARGET
C       PROGRAM ALSO TAKES POWER MEASUREMENT, CALIBRATES AND
C       RETURNS POWER TO LACE MVAX.
C       GPIB PROFESSIONAL FORTRAN HEADER
        COMMON /IBGLOB/ IBSTA, IBERR, IBCNT
C       GPIB FUNCTIONS
        INTEGER*2   IBSTA, IBERR, IBCNT
        INTEGER*2   IBCLR, IBCMD, IBEOS, IBFIND, IBONL
        INTEGER*2   IBRD, IBRDF, IBRSP, IBSRE, IBTMO
        INTEGER*2   IBWAIT, IBWRT, IBWRTF
C       GPIB COMMANDS
        INTEGER*2   UNL, UNT, GTL, SDC, PPC, GET, TCT, SPR
        INTEGER*2   LLO, DCL, PPU, SPE, SPD, PPE, PPD
        INTEGER*2   ERR, TIMO, END, SRQI, RQS, CMPL, LOK
        INTEGER*2   REM, CIC, ATN, TACS, LACS, DTAS, DCAS
C       TIMEOUT VALUES
        INTEGER*2   TNONE, T10US, T30US, T100US, T300US
        INTEGER*2   T1MS, T3MS, T10MS, T30MS, T100MS
        INTEGER*2   T300MS, T1S, T3S, T10S, T30S
        INTEGER*2   T100S, T300S, T1000S
C       MAIN PROGRAM VARIABLE DECLARATIONS
        INTEGER             XAXIS, YAXIS, ADC, GP
        INTEGER*2   PH, DL, IX, IY, DN, DATA
        INTEGER*2   ITYPE, VAL, LASER, LS
        REAL        POUT, BEAM, PRF, PL, RATIO
        CHARACTER*6         BUF
        CHARACTER*1         TYPE, CONV
        CHARACTER*2         CDN, DONV
        CHARACTER*7         BONV, CPOUT
        CHARACTER*10        FNAME
        CHARACTER*14        LIST
        LOGICAL     OP, EX
C       GPIB COMMANDS: VALUES
        DATA        UNL/63/, UNT/95/, GTL/01/, SDC/04/, PPC/05/
        DATA GET/08/, TCT/09/, LLO/17/, DCL/20/, PPU/21/
        DATA SPE/24/, SPD/25/, PPE/96/, PPD/112/
C       GPIB STATUS BIT VECTOR: VALUES
        DATA TIMO/Z'4000'/, END/Z'2000'/, SRQI/Z'1000'/
        DATA CIC/Z'20'/, RQS/Z'800'/, CMPL/Z'100'/, LOK/Z'80'/
        DATA REM/Z'40'/, ATN/Z'10'/, TACS/Z'8'/, LACS/Z'4'/
        DATA DTAS/Z'2'/, DCAS/Z'1'/
C       EOS MODE: BIT VALUES
        DATA BIN/Z'1000'/,XEOS/Z'800'/,REOS/Z'400'/
C       TIMEOUT VALUES
```

```
      DATA TNONE/0/,T10us/1/,T30us/2/,T100us/3/,T300us/4/
      DATA T1ms/5/,T3ms/6/,T10ms/7/,T30ms/8/,T100ms/9/
      DATA T300ms/10/,T1s/11/,T3s/12/T10s/13/,T30s/14/
      DATA T100s/15/,T300s/16/,T1000s/17/
C     DEVICE ADDRESS LOCATION
      XAXIS= IBFIND ('XAXIS')
      YAXIS= IBFIND ('YAXIS')
      GP= IBFIND ('GPIB2')
      ADC= IBFIND ('ADC')
C     PERFORM DEVICE CONNECTION CHECKS
      CALL IBRSP (XAXIS, SPR)
      WRITE (*, *) SPR
      IF (SPR.NE.48) GOTO 12
      CALL IBRSP (YAXIS, SPR)
      WRITE (*, *) SPR
      IF (SPR.NE.48) GOTO 12
      CALL IBRSP (GP, SPR)
      WRITE (*, *) SPR
      CALL IBRSP (ADC, SPR)
      WRITE (*, *) SPR
C     AN IBWRT WILL HANG ON THE BUS UNTIL MVAX READ ADDRESSES
C     IBMPC TO WRITE TO BUS
C     AN IBRD WILL HANG ON THE BUS UNTIL MVAX WRITES DATA ON BUS
C     ASK USER WHETHER TO EXPECT DATA FROM BUS OR KEYBOARD
      WRITE (*,*) 'EXPECT DATA FROM KEYBOARD (1), OR IEEE BUS (2)'
      READ (*, *) DATA
1     CONTINUE
      CALL SEARCH (PH, DL, DN, ITYPE, DATA, GP)
C     EXECUTE MOVEMENT
      CALL MOVE (PH, DL, XAXIS, YAXIS)
C     TAKE POWER MEASUREMENT READING FROM ADC
      CALL POWER (ADC, ITYPE, POUT)
      IF(DATA.EQ.1) GOTO 1
C     ENCODE POUT AS DATA WORD TO SEND BACK TO MVAX
      WRITE (DONV, 20) DN
      READ (DONV, 21) CDN
      WRITE (CONV, 22) ITYPE
      READ (CONV, 23) TYPE
      WRITE (BONV, 24) POUT
      READ (BONV, 25) CPOUT
      LIST= '#'//CDN//':'//TYPE//'&'//CPOUT//'@'
C     SEND POWER MEASUREMENT TO MVAX
      WRITE (*, 26) LIST
      CALL IBWRT (GP, LIST, 14)
C     LOOP BACK, GET ANOTHER SENSOR ID NUMBER
      GO TO 1
20    FORMAT (I2.2)
21    FORMAT (A2)
22    FORMAT (I1)
23    FORMAT (A1)
24    FORMAT (F7.3)
```

```
25      FORMAT (A7)
26      FORMAT ( A)
11      FORMAT (A5)
12      WRITE (*, *) 'DEVICE CHECK FAILURE, POWER DOWN CONTROLLER'
        END
C       ********************************************************
        SUBROUTINE SEARCH (PH, DL, DN, ITYPE, K, GP)
C       ROUTINE DECODES DATA READ FROM MVAX, OPENS DATA FILE,
C       RETURNS WITH DN, PH, DL VALUES
        INTEGER*2   PH, DL, DN, DM
        INTEGER*2   ITYPE, K, IBRD, IBWRT
        INTEGER             RL, CODE, GP
        CHARACTER*7         FILNM
        CHARACTER*6     BUF
        CHARACTER*4         DONV
        CHARACTER*1         CONV
        CHARACTER*1         BDN, BDM
        CHARACTER*1         BTYPE
        RL= 30
103     IF (K.EQ.1) THEN
        WRITE (*, 99)
        WRITE (*, 101)
        READ (*, *)  ITYPE, DN
        GO TO 102
        END IF
        IF (K.EQ.2) THEN
        CALL IBRD (GP, BUF, 6)
        BTYPE= BUF(2:2)
        BDN= BUF(4:4)
        BDM= BUF(5:5)
        WRITE (CONV, 4) BTYPE
        READ (CONV, 6) ITYPE
        WRITE (CONV, 4) BDN
        READ (CONV, 6) DN
        WRITE (CONV, 4) BDM
        READ (CONV, 6) DM
        DN=DN*10
        DN=DN + DM
        END IF
102     CODE= 85
        IF (ITYPE.EQ.4.OR.ITYPE.EQ.5) CODE= 40
        IF (ITYPE.EQ.1) FILNM='OAR.DAT'
        IF (ITYPE.EQ.2) FILNM='UVH.DAT'
        IF (ITYPE.EQ.3) FILNM='UVL.DAT'
        IF (ITYPE.EQ.4) FILNM='IRH.DAT'
        IF (ITYPE.EQ.5) FILNM='IRL.DAT'
        IF (ITYPE.LT.1.OR.ITYPE.GT.5) GO TO 3
        WRITE (*, *) FILNM
        OPEN (2, FILE=FILNM, ACCESS='DIRECT', RECL=RL,
     / FORM= 'FORMATTED', STATUS='OLD')
C       SEARCH FOR PH, DL
```

```
      READ (2, REC=DN, FMT=8) J, PH, DL
      WRITE (*, *) J, PH, DL
10    CONTINUE
1     RETURN
3     WRITE (*, 9)
      GOTO 103
4     FORMAT (A)
5     FORMAT (A3)
6     FORMAT (I1)
7     FORMAT (A4)
8     FORMAT (I5, 2I9)
9     FORMAT (' SENSOR TYPE NOT PROPERLY IDENTIFIED ')
99    FORMAT (' SENSOR TYPES: (1)AR, (2)UVH, (3)UVL, (4)IRH, (5)IRL')
100   FORMAT (' ENTER (1) FOR USER INPUT,
     /                              (2) FOR IEEE DATA XFER: ')
101   FORMAT(' ENTER SENSOR TYPE, ID#: ')
      END
C     ********************************************************
      SUBROUTINE MOVE (PH, DL, XAXIS, YAXIS)
C     ROUTINE TAKES RETURNED STEP COUNTS AND DIRECTS CONTROLLER
C     TO MOVE GONIOMETER TO SELECTED TARGET
      INTEGER*2   PH, DL, IXX, IYY, IX, IY
      INTEGER*2   XAXIS, YAXIS, TIMO
      CHARACTER*1       N$
      CHARACTER*2       S$, U$, G$
      CHARACTER*4       X4$, Y4$
      CHARACTER*5       X3$, Y3$
      CHARACTER*6       X$, Y$, X1$, Y1$
      CHARACTER*7       X2$, Y2$, BUFX, BUFY
      CHARACTER*8       RATE
      CHARACTER*9    CV
C     READ CURRENT POSITION FROM DISPLAY
      CALL IBCLR (XAXIS)
      CALL IBCLR (YAXIS)
      CALL IBWRTF (XAXIS, 'DISPLAY')
      CALL IBWRTF (YAXIS, 'DISPLAY')
      CALL IBWAIT (XAXIS, TIMO)
      CALL IBWAIT (YAXIS, TIMO)
      CALL IBRD (XAXIS, BUFX, 9)
      CALL IBRD (YAXIS, BUFY, 9)
      WRITE (*, 2000) BUFX, BUFY
C     READ CHARACTER STRING INTO INTEGER FORMAT
      WRITE (CV, 70) BUFX
      READ (CV, 80) IX
      WRITE (CV, 70) BUFY
      READ (CV, 80) IY
C     SUBTRACT PRESENT VALUES FROM DESTINATION POSITION
      PH= PH - IX
      DL= DL - IY
      RATE= 'RATE.DAT'
C     RATE IS THE FILE WHICH CONTAINS A,R,S,F STATEMENTS
```

```
      CALL IBCLR (XAXIS)
      CALL IBWRTF (XAXIS,RATE)
      CALL IBCLR (YAXIS)
      CALL IBWRTF (YAXIS,RATE)
C     WRITE STEP COUNTS AS STRINGS
      IXX=IABS(PH)
      IYY=IABS(DL)
      N$='N'
      IF (IXX.LT.1000 .AND. IXX .GE. 100) WRITE(X$,17) IXX
      IF (IXX.GE.1000) WRITE(X$,16) IXX
      IF (IYY.LT.1000 .AND. IYY .GE. 100) WRITE(Y$,17) IYY
      IF (IYY.GE.1000) WRITE(Y$,16) IYY
      IF (IXX.LT.100.AND.IXX.GE.10) WRITE (X$,18) IXX
      IF (IYY.LT.100.AND.IYY.GE.10) WRITE (Y$,18) IYY
      IF (IXX.LT.10) WRITE (X$, 19) IXX
      IF (IYY.LT.10) WRITE (Y$, 19) IYY
      IF (IXX.EQ.0) X$='00'
      IF (IYY.EQ.0) Y$='00'
      X1$=N$//' '//X$(1:3)//CHAR(13)
      X2$=N$//' '//X$(1:4)//CHAR(13)
      X3$=N$//' '//X$(1:2)//CHAR(13)
      X4$=N$//' '//X$(1:1)//CHAR(13)
      Y1$=N$//' '//Y$(1:3)//CHAR(13)
      Y2$=N$//' '//Y$(1:4)//CHAR(13)
      Y3$=N$//' '//Y$(1:2)//CHAR(13)
      Y4$=N$//' '//Y$(1:1)//CHAR(13)
      IF (PH .LT. 0) GO TO 100
      GO TO 110
100   S$='-'//CHAR(13)
      GO TO 150
110   S$='+'//CHAR(13)
150   IF (DL .LT. 0) GO TO 200
      GO TO 210
200   U$='-'//CHAR(13)
      GO TO 250
210   U$='+'//CHAR(13)
250   G$='G'//CHAR(13)
      IF(IXX.LT.100.AND.IXX.GE.10.AND.IYY.LT.100.AND.IYY.GE.10)GOTO 800
      IF (IXX.LT.100.AND.IXX.GE.10.AND.IYY.GE.1000) GO TO 900
      IF(IXX.LT.100.AND.IXX.GE.10.AND.IYY.GE.100.AND.IYY.LT.1000)GOTO 12
      IF (IXX.LT.10.AND.IYY.LT.10) GO TO 1300
      IF (IXX.LT.10.AND.IYY.GE.10.AND.IYY.LT.100) GO TO 1400
      IF (IXX.LT.10.AND.IYY.GE.100.AND.IYY.LT.1000) GO TO 1500
      IF (IXX.LT.10.AND.IYY.GE.1000) GO TO 1600
      IF (IXX.GE.10.AND.IXX.LT.100.AND.IYY.LT.10) GO TO 1700
      IF (IXX.LT.1000.AND.IXX.GE.100.AND.IYY.GE.1000) GO TO 500
      IF (IXX.GE.1000.AND.IYY.LT.1000.AND.IYY.GE.100) GO TO 600
      IF (IXX .GE. 1000 .AND. IYY .GE. 1000) GO TO 700
      IF(IXX.GE.100.AND.IXX.LT.1000.AND.IYY.LT.100.AND.IYY.GE.10)GOTO 10
      IF (IXX.GE.1000.AND.IYY.LT.100.AND.IYY.GE.10) GO TO 1100
      IF (IXX.GE.100.AND.IXX.LT.1000.AND.IYY.LT.10) GO TO 1800
```

```
      IF (IXX.GE.1000.AND.IYY.LT.10) GO TO 1900
      IF(IXX.LT.1000.AND.IXX.GE.100.AND.IYY.LT.1000.AND.IYY.GE.100)
     / GOTO 20
800   CALL IBCLR(XAXIS)
      CALL IBWRT(XAXIS,X3$,5)
      CALL IBWRT(XAXIS,S$,2)
      CALL IBWRT(XAXIS,G$,2)
C     Y AXIS MOVEMENT
      CALL IBWAIT (XAXIS, TIMO)
      CALL IBCLR(YAXIS)
      CALL IBWRT(YAXIS,Y3$,5)
      CALL IBWRT(YAXIS,U$,2)
      CALL IBWRT(YAXIS,G$,2)
      GO TO 300
C     X AXIS MOVEMENT
900   CALL IBCLR(XAXIS)
      CALL IBWRT(XAXIS,X3$,5)
      CALL IBWRT(XAXIS,S$,2)
      CALL IBWRT(XAXIS,G$,2)
C     Y AXIS MOVEMENT
      CALL IBWAIT (XAXIS, TIMO)
      CALL IBCLR(YAXIS)
      CALL IBWRT(YAXIS,Y2$,7)
      CALL IBWRT(YAXIS,U$,2)
      CALL IBWRT(YAXIS,G$,2)
      GO TO 300
C     X AXIS MOVEMENT
12    CALL IBCLR(XAXIS)
      CALL IBWRT(XAXIS,X3$,5)
      CALL IBWRT(XAXIS,S$,2)
      CALL IBWRT(XAXIS,G$,2)
C     Y AXIS MOVEMENT
      CALL IBWAIT (XAXIS, TIMO)
      CALL IBCLR(YAXIS)
      CALL IBWRT(YAXIS,Y1$,6)
      CALL IBWRT(YAXIS,U$,2)
      CALL IBWRT(YAXIS,G$,2)
      GO TO 300
C     X AXIS MOVEMENT
1300  CALL IBCLR(XAXIS)
      CALL IBWRT(XAXIS,X4$,4)
      CALL IBWRT(XAXIS,S$,2)
      CALL IBWRT(XAXIS,G$,2)
C     Y AXIS MOVEMENT
      CALL IBWAIT (XAXIS, TIMO)
      CALL IBCLR(YAXIS)
      CALL IBWRT(YAXIS,Y4$,4)
      CALL IBWRT(YAXIS,U$,2)
      CALL IBWRT(YAXIS,G$,2)
      GO TO 300
C     X AXIS MOVEMENT
```

```
1400  CALL IBCLR(XAXIS)
      CALL IBWRT(XAXIS,X4$,4)
      CALL IBWRT(XAXIS,S$,2)
      CALL IBWRT(XAXIS,G$,2)
C     Y AXIS MOVEMENT
      CALL IBWAIT (XAXIS, TIMO)
      CALL IBCLR(YAXIS)
      CALL IBWRT(YAXIS,Y3$,5)
      CALL IBWRT(YAXIS,U$,2)
      CALL IBWRT(YAXIS,G$,2)
      GO TO 300
C     X AXIS MOVEMENT
1500  CALL IBCLR(XAXIS)
      CALL IBWRT(XAXIS,X4$,4)
      CALL IBWRT(XAXIS,S$,2)
      CALL IBWRT(XAXIS,G$,2)
C     Y AXIS MOVEMENT
      CALL IBWAIT (XAXIS, TIMO)
      CALL IBCLR(YAXIS)
      CALL IBWRT(YAXIS,Y1$,6)
      CALL IBWRT(YAXIS,U$,2)
      CALL IBWRT(YAXIS,G$,2)
      GO TO 300
C     X AXIS MOVEMENT
1600  CALL IBCLR(XAXIS)
      CALL IBWRT(XAXIS,X4$,4)
      CALL IBWRT(XAXIS,S$,2)
      CALL IBWRT(XAXIS,G$,2)
C     Y AXIS MOVEMENT
      CALL IBWAIT (XAXIS, TIMO)
      CALL IBCLR(YAXIS)
      CALL IBWRT(YAXIS,Y2$,7)
      CALL IBWRT(YAXIS,U$,2)
      CALL IBWRT(YAXIS,G$,2)
      GO TO 300
C     X AXIS MOVEMENT
1700  CALL IBCLR(XAXIS)
      CALL IBWRT(XAXIS,X3$,5)
      CALL IBWRT(XAXIS,S$,2)
      CALL IBWRT(XAXIS,G$,2)
C     Y AXIS MOVEMENT
      CALL IBWAIT (XAXIS, TIMO)
      CALL IBCLR(YAXIS)
      CALL IBWRT(YAXIS,Y4$,4)
      CALL IBWRT(YAXIS,U$,2)
      CALL IBWRT(YAXIS,G$,2)
      GO TO 300
C     X AXIS MOVEMENT
500   CALL IBCLR(XAXIS)
      CALL IBWRT(XAXIS,X1$,6)
      CALL IBWRT(XAXIS,S$,2)
```

```
      CALL IBWRT(XAXIS,G$,2)
C     Y AXIS MOVEMENT
      CALL IBWAIT (XAXIS, TIMO)
      CALL IBCLR(YAXIS)
      CALL IBWRT(YAXIS,Y2$,7)
      CALL IBWRT(YAXIS,U$,2)
      CALL IBWRT(YAXIS,G$,2)
      GO TO 300
C     X AXIS MOVEMENT
600   CALL IBCLR(XAXIS)
      CALL IBWRT(XAXIS,X2$,7)
      CALL IBWRT(XAXIS,S$,2)
      CALL IBWRT(XAXIS,G$,2)
C     Y AXIS MOVEMENT
      CALL IBWAIT (XAXIS, TIMO)
      CALL IBCLR(YAXIS)
      CALL IBWRT(YAXIS,Y1$,6)
      CALL IBWRT(YAXIS,U$,2)
      CALL IBWRT(YAXIS,G$,2)
      GO TO 300
C     X AXIS MOVEMENT
700   CALL IBCLR(XAXIS)
      CALL IBWRT(XAXIS,X2$,7)
      CALL IBWRT(XAXIS,S$,2)
      CALL IBWRT(XAXIS,G$,2)
C     Y AXIS MOVEMENT
      CALL IBWAIT (XAXIS, TIMO)
      CALL IBCLR(YAXIS)
      CALL IBWRT(YAXIS,Y2$,7)
      CALL IBWRT(YAXIS,U$,2)
      CALL IBWRT(YAXIS,G$,2)
      GO TO 300
C     X AXIS MOVEMENT
10    CALL IBCLR(XAXIS)
      CALL IBWRT(XAXIS,X1$,6)
      CALL IBWRT(XAXIS,S$,2)
      CALL IBWRT(XAXIS,G$,2)
C     Y AXIS MOVEMENT
      CALL IBWAIT (XAXIS, TIMO)
      CALL IBCLR(YAXIS)
      CALL IBWRT(YAXIS,Y3$,5)
      CALL IBWRT(YAXIS,U$,2)
      CALL IBWRT(YAXIS,G$,2)
      GO TO 300
C     X AXIS MOVEMENT
1100  CALL IBCLR(XAXIS)
      CALL IBWRT(XAXIS,X2$,7)
      CALL IBWRT(XAXIS,S$,2)
      CALL IBWRT(XAXIS,G$,2)
C     Y AXIS MOVEMENT
      CALL IBWAIT (XAXIS, TIMO)
```

```
      CALL IBCLR(YAXIS)
      CALL IBWRT(YAXIS,Y3$,5)
      CALL IBWRT(YAXIS,U$,2)
      CALL IBWRT(YAXIS,G$,2)
      GO TO 300
C     X AXIS MOVEMENT
1800  CALL IBCLR(XAXIS)
      CALL IBWRT(XAXIS,X1$,6)
      CALL IBWRT(XAXIS,S$,2)
      CALL IBWRT(XAXIS,G$,2)
C     Y AXIS MOVEMENT
      CALL IBWAIT (XAXIS, TIMO)
      CALL IBCLR(YAXIS)
      CALL IBWRT(YAXIS,Y4$,4)
      CALL IBWRT(YAXIS,U$,2)
      CALL IBWRT(YAXIS,G$,2)
      GO TO 300
C     X AXIS MOVEMENT
1900  CALL IBCLR(XAXIS)
      CALL IBWRT(XAXIS,X2$,7)
      CALL IBWRT(XAXIS,S$,2)
      CALL IBWRT(XAXIS,G$,2)
C     Y AXIS MOVEMENT
      CALL IBWAIT (XAXIS, TIMO)
      CALL IBCLR(YAXIS)
      CALL IBWRT(YAXIS,Y4$,4)
      CALL IBWRT(YAXIS,U$,2)
      CALL IBWRT(YAXIS,G$,2)
      GO TO 300
C     X AXIS MOVEMENT
20    CALL IBCLR(XAXIS)
      CALL IBWRT(XAXIS,X1$,6)
      CALL IBWRT(XAXIS,S$,2)
      CALL IBWRT(XAXIS,G$,2)
C     Y AXIS MOVEMENT
      CALL IBWAIT (XAXIS, TIMO)
      CALL IBCLR(YAXIS)
      CALL IBWRT(YAXIS,Y1$,6)
      CALL IBWRT(YAXIS,U$,2)
      CALL IBWRT(YAXIS,G$,2)
300   CONTINUE
11    FORMAT (A)
16    FORMAT (I4)
17    FORMAT (I3)
18    FORMAT (I2)
19    FORMAT (I1)
70    FORMAT (A9)
80    FORMAT (I9)
2000  FORMAT (2A9)
      RETURN
      END
```

```
C       ************************************************************
        SUBROUTINE POWER (ADC, ITYPE, POUT)
        INTEGER*2   PIN, ADC, ITYPE, LASER
        INTEGER             NUM
        REAL        RATIO, SCALE, ND
        REAL                BEAM, PRF, PL, SENSAR, AREA, POUT
        CHARACTER*2         BAD
        CHARACTER*10        FILNM
        LOGICAL             EX, OP
        CALL IBCLR (ADC)
        CALL IBWRT (ADC, 'H8AJ', 4)
        CALL IBRD (ADC, BAD, 2)
        CALL CONVERT (BAD, PIN)
        WRITE (*, *) PIN
C       WRITE (*, 5)
C       READ (*, 6) SCALE
        SCALE = 1.0
C       WRITE (*, 7)
C       READ (*, 8) ND
        ND = 1
23      CONTINUE
C       WRITE (*, 10)
C       READ (*, *) LASER
        LASER = 1
        OPEN (9, FILE='LASERS.DAT', STATUS='OLD')
        DO 21 I=1, 5
        READ (9, *) NUM, BEAM, PRF, PL, RATIO
        IF (I.EQ.5.AND.NUM.NE.LASER) GO TO 23
        IF (NUM.EQ.LASER) GO TO 22
21      CONTINUE
C       WHAT IS SENSOR AREA?
22      CLOSE (9)
        IF (ITYPE.EQ.1) SENSAR= 1.0
        IF (ITYPE.EQ.2) SENSAR= 1.0
        IF (ITYPE.EQ.3) SENSAR= 1.0
        IF (ITYPE.EQ.4) SENSAR= 1.0
        IF (ITYPE.EQ.5) SENSAR= 1.0
C       COMPUTE FACTORS
        PIN= PIN + 1024
        SCALE= SCALE / 1024
        ND= 10 ** (-ND)
        PRF= 1 / PRF
        PL= 1/ PL
        AREA= (SENSAR / BEAM)
        POUT= PIN * SCALE * ND * PRF * PL * RATIO * AREA
        WRITE (*, *) POUT
C       FORMAT (' POWER METER FULL SCALE VALUE: ')
C       FORMAT (F5.2)
C       FORMAT (' NEUTRAL DENSITY VALUE: ')
C       FORMAT (F5.2)
C       FORMAT (' SELECT LASER: (1)AR, (2)HN, (3)DF, (4)EX, (5)YAG ')
```

```
      RETURN
      END
C     ************************************************************
      SUBROUTINE CONVERT (BAD,IOUT)
C     THIS ROUTINE CONVERTS THE ADC READING TO AN INTEGER
C     ROUTINE IS CALLED UP BY SUBROUTINE POWER
      CHARACTER*2 BAD
      CHARACTER*1 BADA,BADB
      INTEGER*2   IA,IB,IC,ID,IE,IGF,IOUT
      BADA=BAD(:1)
      BADB=BAD(2:)
      IA=ICHAR(BADA)
      IB=ICHAR(BADB)
      IF (IA .LT. 4) GO TO 200
100   IC = 255 - IA
      ID = IC*256
      IE = 256 - IB
      IGF = ID + IE
      IOUT = -1 * IGF
      GO TO 300
200   IC = IA * 256
      IOUT = IC + IB
300   RETURN
      END
```