NRL Report 8933

UNCLASSIFIED

# Characterization and Calibration of Four High Energy Laser Calorimeters

G. L. HALL AND R. B. BROWN

*Optical Sciences Division*

December 23, 1985

NAVAL RESEARCH LABORATORY
Washington, D.C.

Approved for public release; distribution unlimited.

UNCLASSIFIED

SECURITY CLASSIFICATION OF THIS PAGE

# REPORT DOCUMENTATION PAGE

| | |
|---|---|
| 1a. REPORT SECURITY CLASSIFICATION<br>UNCLASSIFIED | 1b. RESTRICTIVE MARKINGS |
| 2a. SECURITY CLASSIFICATION AUTHORITY | 3. DISTRIBUTION / AVAILABILITY OF REPORT<br>Approved for public release; distribution unlimited. |
| 2b DECLASSIFICATION / DOWNGRADING SCHEDULE | |
| 4 PERFORMING ORGANIZATION REPORT NUMBER(S)<br>NRL Report 8933 | 5. MONITORING ORGANIZATION REPORT NUMBER(S) |
| 6a. NAME OF PERFORMING ORGANIZATION<br>Naval Research Laboratory — 6b OFFICE SYMBOL (If applicable) 6545 | 7a. NAME OF MONITORING ORGANIZATION |
| 6c. ADDRESS (City, State, and ZIP Code)<br>Washington, DC 20375-5000 | 7b. ADDRESS (City, State, and ZIP Code) |
| 8a. NAME OF FUNDING / SPONSORING ORGANIZATION<br>Naval Sea Systems Command — 8b. OFFICE SYMBOL (If applicable) | 9. PROCUREMENT INSTRUMENT IDENTIFICATION NUMBER |
| 8c. ADDRESS (City, State, and ZIP Code)<br>Washington, DC 20362 | 10. SOURCE OF FUNDING NUMBERS<br>PROGRAM ELEMENT NO. 62735N; PROJECT NO.; TASK NO.; WORK UNIT ACCESSION NO. EX091-029 |

11. TITLE (Include Security Classification)
Characterization and Calibration of Four High Energy Laser Calorimeters

12. PERSONAL AUTHOR(S)
Hall, G.L. and Brown, R.B.

| 13a. TYPE OF REPORT | 13b. TIME COVERED | 14. DATE OF REPORT (Year, Month, Day) | 15. PAGE COUNT |
|---|---|---|---|
| Interim | FROM _____ TO _____ | 1985 December 23 | 23 |

16 SUPPLEMENTARY NOTATION

| 17. COSATI CODES | | | 18. SUBJECT TERMS (Continue on reverse if necessary and identify by block number) |
|---|---|---|---|
| FIELD | GROUP | SUB-GROUP | Laser calorimeter<br>High energy laser |
| | | | |
| | | | |

19 ABSTRACT (Continue on reverse if necessary and identify by block number)


Four spherical heat sink calorimeters were built for monitoring laser power in the Navy High Energy Laser Program. An extensive study was made to characterize the transfer of energy from a 90 kW lamp to one of the calorimeters. This characterization was then used in the calibration of all four.

The standard deviations of the data indicate the precision of the calorimeters is within 2%, with the probable error in the accuracy of the calibrations within 5%. Calibrations calculated from the physical properties of the materials used in the calorimeters are also within 5%, indicating that this is also a valid method of calibration.

Details on the character of the response of the calorimeters are included in the report, and operating instructions are included in appendix A.


| | |
|---|---|
| 20 DISTRIBUTION / AVAILABILITY OF ABSTRACT<br>☒ UNCLASSIFIED/UNLIMITED ☐ SAME AS RPT. ☐ DTIC USERS | 21. ABSTRACT SECURITY CLASSIFICATION<br>UNCLASSIFED |
| 22a NAME OF RESPONSIBLE INDIVIDUAL<br>G.L. Hall | 22b. TELEPHONE (Include Area Code) (202) 767-2955 — 22c. OFFICE SYMBOL 6545 |

DD FORM 1473, 84 MAR — 83 APR edition may be used until exhausted. All other editions are obsolete.

SECURITY CLASSIFICATION OF THIS PAGE

UNCLASSIFIED

## CONTENTS

INTRODUCTION ..... 1

METHOD OF CALIBRATION ..... 2

CHARACTERIZATION OF THE LAMP ..... 4

CALIBRATION OF THE CALORIMETERS ..... 11

DISCUSSION ..... 12

SUMMARY ..... 14

ACKNOWLEDGMENT ..... 14

REFERENCES ..... 14

APPENDIX A — Calorimeter Operation ..... 15

APPENDIX B — Uncertainty in Measured and Calculated Calorimeter Calibration Constant ..... 18

UNCLASSIFIED

# CHARACTERIZATION AND CALIBRATION OF FOUR HIGH ENERGY LASER CALORIMETERS

## INTRODUCTION

Three large spherical heat sink calorimeters and one medium-sized calorimeter for use in the Navy High Energy Laser Program were constructed. Engineering drawings, 7290 001 to 7290 009 and 7319 001 to 7319 008, were completed by the Laboratory's Engineering Services Division. The three large calorimeters were designated serial 04, 05, and 06. The medium calorimeter is serial 07. The original concept for the design is from Ref. 1. The working characteristics, theoretical response, and calibration of three smaller calorimeters are detailed in Ref. 2.

These heat sink calorimeters absorb the laser energy to be measured in aluminum alloy and in this way differ from water-cooled calorimeters that absorb the energy in water flowing in cooling coils. Although the uncooled devices are difficult to design to be both sensitive instruments and also serve as power dumps, they do have several advantages over the cooled devices. They are an order of magnitude less expensive to build. They are less bulky and more portable since they do not require water tanks, piping, valves, and extensive controls. They are simple and direct in the way that the energy is measured and do not require extensive computing to complete the measurement. This last advantage relates to accuracy, and while much has been written about the technique of measurement in the flowing water calorimeters, the question of accuracy has not been explored in as much detail for the heat sink devices. For this reason, this calibration effort is being reported in detail where it relates to accuracy, so that this information will be available when greater accuracy is required.

Each of the large calorimeters consists of a hollow aluminum sphere nearly 2 m in diameter and approximately 2 cm thick. The medium calorimeter is 1 m in diameter and 0.7 to 0.8 cm thick. An opening in one end admits the laser beam to the interior of the sphere, and an opening in the other end allows the installation of a spreading mirror to deflect the laser energy into the inner surface which is coated with ALUMA® BLACK.* Number 30 copper wire is wound in grooves machined in the outer surface to serve as a temperature sensor. Figure 1 depicts one of the large calorimeters.

The spheres are built from hemispheres spun from flat plates. The hemispheres are cut to overlap and bolt together around the equator, and the openings are cut at opposite poles. The plates from which the hemispheres are spun are of uniform thickness, but after spinning the thickness varies with latitude from the pole to the equator. This variation in thickness was measured and plotted by use of a sonic probe. The inner and outer surfaces of the sphere come to thermal equilibrium in less than a second, but more distant points on the sphere take much longer. In fact, the calorimeter will cool to ambient temperatures by the time it reaches thermal equilibrium. It is therefore necessary to distribute the wire winding in proportion to the mass of the aluminum to quickly get an accurate reading. It was not necessary to precisely locate each individual wire groove, but it was decided to allocate them in groups of 10 to ranges of latitude with equal cross-sectional areas calculated from the thickness variation data. Since the spreading mirror is designed to distribute no energy adjacent to the openings, there is virtually no temperature change there, and no wire is wound within 10 cm of the openings.

---

Manuscript approved July 24, 1985.

*ALUMA® BLACK: Registered trademark, Birchwood Casy Division, Fuller Laboratories, Inc., 7900 Fuller Road, Eden Prairie, Minnesota 55343.

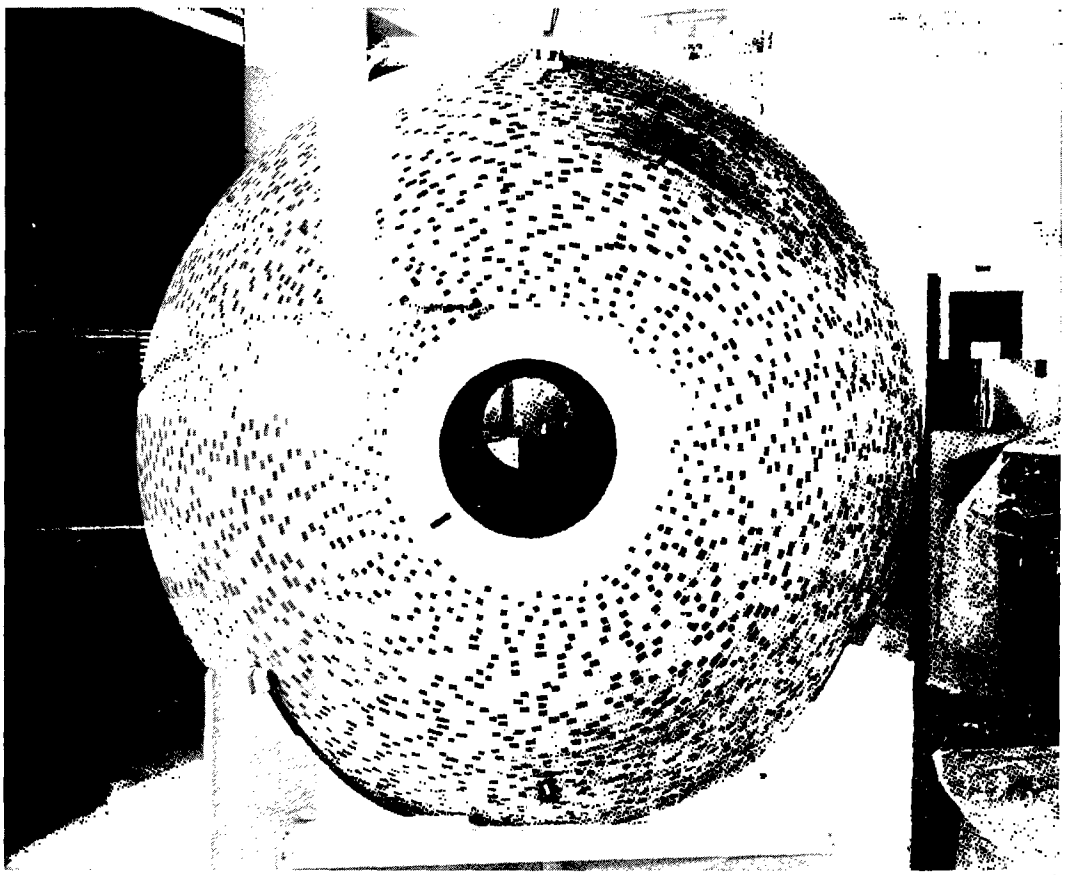

79578(4)

Fig. 1 — One of the 2-m diameter calorimeters

The response of the calorimeters to the laser energy directed into them can be calculated from their basic physical properties, but because of uncertainty in the values of the heat capacity, the temperature coefficient of resistance and possible less obvious factors, it was thought necessary to calibrate the calorimeters. Early attempts at calibration, such as filling with hot water and noting the response only served to calibrate the sensor wire and electronics; i.e., it did not involve the heat capacity of the aluminum and the total response to an energy input. More recently, the energy exchange between a measured quantity of water and a calorimeter has been measured, but this is practical only in small calorimeters.

## METHOD OF CALIBRATION

The high-power lamp technique employed in the calibration is described in Ref. 2. The concept was developed and used on two of the three half meter-diameter calorimeters owned by NRL at that time. It uses a large electric lamp that radiates a measured amount of energy into the calorimeter in a short time which is then compared with the response of the calorimeter. The original lamp structure used 6 GE Q6M/T3/CL/HT tungsten halogen lamps. The same lamp structure has now been increased to its full capacity of 15 lamps or about 90 kW and has otherwise been modified to fit the larger calorimeters.

The differences in the way the calorimeters receive radiant energy from the lamp and from laser beams are discussed in Ref. 2. The lamp is nondirectional compared to a laser, so the openings are sealed with reflective material and virtually no radiation escapes, so that the wavelength of the radiation is of little consequence. When a laser beam enters the calorimeter, a few percent of the energy is

UNCLASSIFIED

absorbed by the deflecting mirror, most is absorbed in the body of the calorimeter, and a very small part is scattered back out. Experiments were performed at 10.6 $\mu$m with early calorimeters having anodized surfaces, and the scattering loss was found to be always less than 0.5%. The 10.6 $\mu$m radiation is almost totally absorbed on anodized surfaces, but the early calorimeters are now used at wavelengths where anodized surfaces are only half as absorptive, and there has been no difficulty. The spherical design traps the radiation from multiple reflections, and a reflective baffle can be used to reduce the scattering loss even further.

The small amount of the energy absorbed by the copper deflecting mirror can be monitored with sufficient accuracy by a single thermocouple. The time for the mirror to reach thermal equilibrium is short (about 30 s) because of the good thermal conductivity of the copper.

The main effort required to complete the calibration of the calorimeter involves determining the quantity of electrical energy (metered into the lamp) that actually reaches the body of the calorimeter and comparing it to the change in resistance of the winding. The electrical metering described in Ref. 2 uses a multiphase wattmeter and current transformers. The power input to the lamp was observed to stabilize a few tenths of a second after turn on. Now that the lamp has been expanded to 90 kW, the extra energy in the starting transient which cannot be measured by the wattmeter has been calculated to be 25 kJ from current and voltage recordings. When used in standard water-cooled housings, approximately 86% of the lamp input energy is radiated. The other 14% is conducted, convected, or carried away by cooling water. Specifications also state that the lamps radiate about 80% of the available power in less than 1 s after being turned on. This approaches 100% in about 2 min. The cool down also takes about 2 min.*

The calibration lamp was designed for brief periods of operation during which the individual lamps would not overheat, and therefore there is no water cooling and little energy loss. The conduction of the 30 lamp leads to the interior of the lamp was calculated at 1000°C to be 0.06 kJ/s. From the interior it is lost to the heavy power cables. Convection also carries some heat from the lamp to the shell of the calorimeter. The total heat capacity of the air contained in a large calorimeter was calculated to be 0.226 kJ/°C. Thermocouples were inserted inside the calorimeter near the top to sample the air temperature on two 30-s runs. They read more than 30°C warmer than the calorimeter immediately after the run but rapidly dropped to the same temperature within a few minutes. The air may have been cooler since the thermocouple was also exposed to direct radiation. The energy not immediately radiated from the lamp to the calorimeter then is not lost but is convected to the calorimeter or is stored in the individual lamps or in the lamp reflector where it continues to radiate and convect to the calorimeter after turn off.

It is necessary to determine at some instant how much of the metered energy has reached the calorimeter and how much remains in the lamp. The use of thermocouples inside the lamp reflector is described in Ref. 2. Because of the large number of lamps and longer run time now used, the energy stored in the lamp reflector and monitored by the thermocouples is exceeded by the energy stored in the lamps themselves. Therefore, two methods of monitoring the dynamic flow of the energy were used. A radiometer† was installed in the calorimeter to monitor the radiation of the lamp, and the response of the calorimeter itself was also used to monitor the lamp. This was done to characterize the lamp. The radiometer is not needed for a routine calorimeter calibration. It is possible to estimate the energy left in the lamp by some simple calculations. The brass lamp reflector has a mass of 1.98 kg. This represents a heat capacity of about 0.76 kJ/C. During a typical 30-s run, the lamp reflector rises 89°C or 67 kJ. An individual lamp has a mass of 33.2 g, and 15 lamps total 498 g. 265 g of this mass

*From GE Large Lamp Department Publication TP-116-R.

†The radiometer used to monitor the lamp was a multifunction thin film thermopile, type C1, with a KBr window made by Sensors, Inc., Ann Arbor, Michigan.

is in the quartz, and the heat capacity of the lamps is about 0.254 kJ/°C. The quartz is believed to reach 1000°C, a storage of more than 254 kJ since heat capacity increases with temperature. The total energy left in the lamp after a 30-s run is therefore expected to be 300 kJ or more. In the next section a more accurate value is inferred from other considerations.

## CHARACTERIZATION OF THE LAMP

Twenty calibration runs were made on calorimeter No. 06. The radiometer and calorimeter were recorded continuously on a chart recorder while the lamp was on, and for 2-1/2 min or more after the lamp was turned off. Visual readings were recorded by hand of the wattmeter and the digital readout attached to the thermocouples inside the lamp housing. Time reference marks were included in the chart recording from which lamp on-time was measured.

Some of the runs were flawed by equipment malfunction, voltage transients, or human error. Tables 1, 2, and 3 present the data from the remaining 13 runs. Table 1 contains the temperature of the thermocouples in the lamp reflector at various times after the lamp was turned on. After run 10, the readings were made at 15-s intervals. Also in Table 1 are the lamp power (product of the current transformer ratio and the wattmeter reading), the time the lamp was on, and total energy (product of the previous two). It can be seen that the maximum reflector temperature occurs about 60 s after the lamp is turned on or approximately 30 s after it is turned off. The maximum temperature rise also is shown in Table 1 (the maximum temperature minus the starting temperature). If this rise is plotted against total energy, there is a roughly linear relationship as might be expected. Runs 12, 13, and 16 do not fall close to the line. These runs were made on the same day, and since the equipment had to be reconnected each day, it is suspected that there was a bad thermocouple connection for those three runs. The average is therefore based on runs 17 through 20 only.

Table 2 contains the response of the radiometer during the 13 runs. No absolute calibration of the radiometer was made prior to the runs, and therefore the relative response of the radiometer is recorded in the table as millimeters of deflection on the chart recorder. The average of the 13 runs is also listed. Time in the upper parts of Tables 2 and 3 is measured from lamp turn on, whereas time in the lower part of the tables is measured from lamp turn off indicated by the word "END" which averaged 30.06 s for the 13 runs.

Table 3 contains the change in resistance of the calorimeter winding with time for the 13 runs. The readings are referenced to the deflection caused by a 10 Ω precision resistor at the start and end of each chart. The resistor was measured by the NRL standards lab to be 9.9928 Ω. The accuracy of the values in the table is suggested by the fact that they were measured by hand from the chart recording where the 10 Ω deflection was approximately 154 mm. Again, the average of the 13 runs is also listed.

In these three tables the data were carefully analyzed to determine what portion of the energy metered into the lamp was the cause of the response in the the calorimeter winding at some particular time. In the process, the following observations or assumptions were made:

1. All the power measured by the wattmeter is expended in the filaments of the lamp with the loss in the cable between the wattmeter and filaments being negligible. The energy delivered to the filaments is the product of the steady state power and the time it is on, plus a starting transient of approximately 25 kJ.
2. Some of the energy is stored in the heat capacity of the filaments and quartz envelopes as the lamp warms up. A maximum 30 s on-time was chosen to avoid damage to the seals of the uncooled lamps. At turn off, the lamp has not reached equilibrium and is still storing a significant portion of the energy.

UNCLASSIFIED

Table 1 — Lamp Reflector Temperatures in °C with Power and On Time

| TIME (SECONDS) | RUN NUMBER 3 | 4 | 5 | 7 | 9 | 10 | 12 | 13 | 16 | 17 | 18 | 19 | 20 | AVERAGE 17-20 |
|---|---|---|---|---|---|---|---|---|---|---|---|---|---|---|
| 0 | 44.5 | 29.4 | 50.6 | 36.0 | 38.9 | 43.9 | 39.1 | 40.2 | 43.4 | 23.5 | 37.5 | 39.6 | 14.8 | 43.9 |
| 15 | ** | ** | ** | ** | ** | ** | 68.1 | 68.2 | 76.0 | 60.0 | 74.0 | 77.9 | 112. | 81.0 |
| 30 | 127. | 110. | 127. | 114. | 118. | 121. | 109. | 107. | 115. | 105. | 118. | 122. | 153. | 121.9 |
| 45 | ** | ** | ** | ** | ** | ** | 113. | 113. | 122. | 112. | 124. | 128. | 164. | 131.8 |
| 60 | 135. | 118. | 134. | 122. | 127. | 131. | 114. | 114. | 122. | 113. | 125. | 129. | 164. | 132.6 |
| 75 | ** | ** | ** | ** | ** | ** | 114. | 114. | 121. | 113. | 124. | 129. | 162. | 132.6 |
| 90 | ** | ** | ** | ** | ** | 129. | 113. | 113. | 120. | 112. | 123. | 128. | 161. | 130.9 |
| 105 | ** | ** | ** | ** | ** | ** | 112. | 112. | 118. | 111. | 122. | 126. | 158. | 129.2 |
| 120 | 128. | 114. | 129. | 117. | 123. | 126. | 110. | 110. | 116. | 109. | 120. | 124. | 155. | 127.3 |
| 135 | ** | ** | ** | ** | ** | ** | 109. | 109. | 115. | 108. | 119. | 123. | 153. | 125.5 |
| 150 | ** | ** | ** | ** | ** | ** | 107. | 107. | 113. | 106. | 117. | 121. | 150. | 123.5 |
| 165 | ** | ** | ** | ** | ** | ** | 105. | 105. | 112. | 105. | 115. | 119. | 148. | 121.5 |
| 180 | 122. | 107. | 121. | 112. | 116. | 119. | 104. | 104. | 110. | 103. | 113. | 117. | 145. | 119.5 |
| 240 | ** | 101. | 114. | 105. | 108. | 112. | ** | ** | ** | ** | ** | ** | ** | ** |
| MAX. RISE (°C) | 91 | 89 | 83 | 86 | 88 | 87 | 75 | 74 | 78 | 90 | 87 | 90 | 89 | 88.8 |
| LAMP POWER (KW) | 89.6 | 89.4 | 85.8 | 86.9 | 87.5 | 87.6 | 88.0 | 87.0 | 87.7 | 87.2 | 87.2 | 86.8 | 87.0 | AVERAGE ALL 87.5 |
| LAMP TIME (SEC) | 30.4 | 29.3 | 29.7 | 29.8 | 30.3 | 29.9 | 30.2 | 29.8 | 29.8 | 30.1 | 29.6 | 30.4 | 31.3 | 30.06 |
| TOTAL ENERGY (KJ) | 2726 | 2622 | 2550 | 2590 | 2651 | 2620 | 2659 | 2594 | 2610 | 2621 | 2585 | 2641 | 2726 | 2630 |

** READINGS NOT TAKEN

Table 2 — Radiometer Readings in mm

| TIME (SECONDS) | RUN NUMBER 3 | 4 | 5 | 7 | 9 | 10 | 12 | 13 | 16 | 17 | 18 | 19 | 20 | AVERAGE |
|---|---|---|---|---|---|---|---|---|---|---|---|---|---|---|
| 1 | 98.0 | 99.0 | 92.3 | 94.6 | 97.8 | 96.5 | 97.0 | 96.3 | 95.5 | 98.2 | 96.8 | 96.8 | 96.2 | 96.5 |
| 2 | 108 | 110 | 103 | 107 | 109 | 106 | 108 | 107 | 108 | 109 | 108 | 107 | 106 | 107.3 |
| 3 | 114 | 114 | 108 | 111 | 113 | 112 | 114 | 112 | 112 | 114 | 113 | 112 | 112 | 112.2 |
| 5 | 117 | 118 | 111 | 114 | 116 | 115 | 118 | 115 | 116 | 117 | 116 | 115 | 115 | 115.6 |
| 10 | 120 | 121 | 114 | 117 | 118 | 119 | 121 | 118 | 119 | 119 | 119 | 118 | 117 | 118.4 |
| 15 | 121 | 123 | 115 | 118 | 120 | 121 | 123 | 121 | 121 | 121 | 120 | 120 | 119 | 120.3 |
| 20 | 123 | 123 | 117 | 120 | 122 | 122 | 124 | 121 | 122 | 123 | 122 | 121 | 121 | 121.6 |
| 25 | 124 | 125 | 118 | 122 | 123 | 122 | 125 | 123 | 124 | 125 | 124 | 123 | 122 | 123.0 |
| END | 125 | 126 | 118 | 123 | 125 | 125 | 126 | 124 | 125 | 126 | 125 | 126 | 124 | 124.4 |
| 1 | 28.4 | 29.5 | 27.7 | 28.9 | 30.0 | 29.2 | 29.0 | 30.5 | 30.0 | 28.2 | 29.3 | 29.5 | 30.3 | 29.3 |
| 2 | 17.8 | 18.1 | 16.9 | 18.2 | 18.8 | 18.8 | 19.0 | 19.0 | 18.5 | 18.6 | 17.7 | 18.3 | 19.3 | 18.4 |
| 2.5 | 15.5 | 15.3 | 14.5 | 14.9 | 15.8 | 16.2 | 15.5 | 16.0 | 15.4 | 15.6 | 16.0 | 15.4 | 17.1 | 15.6 |
| 5 | 9.6 | 10.0 | 8.8 | 10.0 | 10.0 | 10.5 | 10.0 | 10.0 | 9.0 | 9.9 | 9.7 | 10.0 | 10.4 | 9.9 |
| 15 | 4.0 | 5.0 | 4.3 | 5.2 | 5.1 | 5.0 | 4.5 | 5.0 | 5.5 | 5.3 | 5.3 | 5.7 | 5.2 | 5.0 |
| 30 | 2.0 | 2.2 | 2.5 | 4.0 | 3.0 | 2.2 | 2.0 | 2.0 | 2.5 | 2.5 | 3.0 | 3.0 | 2.6 | 2.6 |
| 45 | 1.5 | 1.3 | 2.0 | 2.3 | 2.2 | 1.5 | 2.0 | 1.5 | 1.5 | 2.0 | 2.0 | 1.9 | 1.5 | 1.8 |
| 60 | 0.9 | 1.1 | 1.0 | 1.5 | 1.5 | 1.2 | 1.5 | 1.0 | 1.0 | 1.7 | 1.7 | 1.3 | 1.5 | 1.3 |
| 75 | 0.8 | 0.9 | 0.8 | 1.0 | 1.5 | 1.0 | 1.0 | 0.8 | 0.9 | 1.2 | 1.8 | 1.5 | 1.2 | 1.1 |
| 90 | 0.6 | 1.1 | 1.1 | 0.9 | 1.2 | 1.1 | 1.0 | 0.8 | 0.7 | 1.1 | 1.4 | 1.5 | 1.1 | 1.1 |
| 105 | 0.4 | 0.9 | 0.6 | 1.0 | 1.6 | 1.5 | 0.0 | 0.8 | 0.5 | 0.9 | 1.5 | 1.2 | 1.1 | 0.9 |
| 120 | 0.3 | 0.5 | 0.8 | 0.8 | 1.4 | 1.1 | 0.5 | 0.7 | 0.3 | 1.2 | 1.0 | 1.3 | 1.0 | 0.8 |
| 135 | 0.6 | 0.5 | 0.6 | 0.7 | 1.1 | 1.5 | 0.8 | 0.7 | 0.6 | 0.8 | 0.8 | 1.0 | 0.9 | 0.8 |
| 150 | 0.3 | 0.5 | 0.4 | 0.7 | 1.4 | 1.0 | 0.8 | 0.7 | 0.2 | 1.0 | 1.0 | 1.0 | 1.2 | 0.8 |

Table 3 — Calorimeter Readings in Ohms

| TIME (SECONDS) | RUN NUMBER 3 | 4 | 5 | 7 | 9 | 10 | 12 | 13 | 16 | 17 | 18 | 19 | 20 | AVERAGE |
|---|---|---|---|---|---|---|---|---|---|---|---|---|---|---|
| 1 | 0 | 0.01 | -0.05 | 0.04 | 0.04 | 0 | 0 | 0 | 0 | 0 | 0 | 0.08 | 0.05 | 0.02 |
| 2 | 0.11 | 0.1 | 0.05 | 0.15 | 0.1 | 0.09 | 0.1 | 0.08 | 0.11 | 0.15 | 0.12 | 0.15 | 0.12 | 0.11 |
| 3 | 0.32 | 0.36 | 0.22 | 0.34 | 0.28 | 0.31 | 0.28 | 0.28 | 0.28 | 0.34 | 0.28 | 0.26 | 0.31 | 0.30 |
| 5 | 0.75 | 0.77 | 0.65 | 0.74 | 0.63 | 0.66 | 0.72 | 0.80 | 0.69 | 0.72 | 0.69 | 0.67 | 0.74 | 0.71 |
| 10 | 1.81 | 1.86 | 1.67 | 1.80 | 1.63 | 1.76 | 1.78 | 1.91 | 1.77 | 1.77 | 1.75 | 1.71 | 1.77 | 1.77 |
| 15 | 2.94 | 2.97 | 2.71 | 2.87 | 2.69 | 2.89 | 2.80 | 3.03 | 2.82 | 2.88 | 2.80 | 2.80 | 2.87 | 2.85 |
| 20 | 4.09 | 4.18 | 3.80 | 4.00 | 3.84 | 3.99 | 3.90 | 4.10 | 3.99 | 4.01 | 3.93 | 3.89 | 3.96 | 3.98 |
| 25 | 5.24 | 5.29 | 4.91 | 5.11 | 5.01 | 5.09 | 5.00 | 5.12 | 5.07 | 5.12 | 5.05 | 5.00 | 5.06 | 5.08 |
| END | 6.52 | 6.30 | 5.91 | 6.18 | 6.17 | 6.17 | 6.18 | 6.14 | 6.16 | 6.23 | 6.04 | 6.22 | 6.46 | 6.21 |
| 1 | 6.70 | 6.52 | 6.13 | 6.40 | 6.38 | 6.43 | 6.38 | 6.38 | 6.38 | 6.50 | 6.27 | 6.38 | 6.67 | 6.42 |
| 2 | 6.82 | 6.62 | 6.21 | 6.50 | 6.50 | 6.53 | 6.50 | 6.48 | 6.45 | 6.63 | 6.41 | 6.53 | 6.78 | 6.54 |
| 2.5 | 6.88 | 6.67 | 6.22 | 6.53 | 6.52 | 6.55 | 6.51 | 6.50 | 6.49 | 6.66 | 6.43 | 6.57 | 6.80 | 6.56 |
| 5 | 6.93 | 6.71 | 6.31 | 6.59 | 6.58 | 6.61 | 6.57 | 6.56 | 6.54 | 6.69 | 6.50 | 6.61 | 6.87 | 6.62 |
| 15 | 7.07 | 6.83 | 6.40 | 6.68 | 6.68 | 6.66 | 6.67 | 6.62 | 6.65 | 6.78 | 6.60 | 6.73 | 6.99 | 6.72 |
| 30 | 7.10 | 6.90 | 6.44 | 6.78 | 6.79 | 6.79 | 6.80 | 6.71 | 6.72 | 6.89 | 6.67 | | 7.04 | 6.80 |
| 45 | 7.14 | 6.93 | 6.53 | 6.87 | 6.87 | 6.82 | 6.92 | 6.73 | 6.81 | 6.93 | 6.73 | | 7.08 | 6.86 |
| 60 | 7.15 | 7.00 | 6.58 | 6.90 | 6.88 | 6.84 | 6.90 | 6.86 | 6.83 | 6.97 | 6.78 | | 7.13 | 6.90 |
| 75 | 7.19 | 7.03 | 6.56 | 6.90 | 6.99 | 6.87 | 6.89 | 6.84 | 6.87 | | 6.80 | * | 7.13 | 6.92 |
| 90 | 7.22 | 6.98 | 6.59 | 6.90 | 7.05 | 6.86 | 6.84 | 6.90 | 6.87 | | 6.80 | | 7.13 | 6.92 |
| 105 | 7.20 | 7.07 | 6.57 | 6.91 | 7.11 | 6.87 | 6.84 | 6.88 | 6.83 | * | 6.82 | | 7.10 | 6.93 |
| 120 | 7.19 | 7.09 | 6.58 | 6.90 | 7.07 | 6.87 | 6.82 | 6.86 | 6.82 | | 6.83 | | 7.09 | 6.92 |
| 135 | 7.19 | 7.11 | 6.55 | 6.91 | 6.98 | 6.86 | 6.82 | 6.82 | 6.82 | | 6.87 | 6.95 | 7.08 | 6.91 |
| 150 | 7.17 | 7.09 | 6.54 | 6.88 | 7.01 | 6.85 | 6.80 | 6.82 | 6.79 | | 6.87 | 6.94 | 7.04 | 6.90 |

* READINGS LOST TO TRANSIENT

3. After it is turned off, the lamp radiates the stored energy. This occurs rapidly at first as the filaments radiate at short wavelengths through the transparent quartz, but more slowly as the filaments cool and radiate at longer wavelengths to which the quartz is more opaque, so that the radiation is mostly from the surface of the quartz. The first radiation is akin to the radiation of the Stefan-Bolzman Law but cannot be expressed in a simple equation because of the complexity of the emissivity and transparency. As the lamp cools, it reaches a point where Newton's Law of Cooling (exponential) applies.

4. The gold-plated reflector in the lamp structure was expected to absorb at least 2% of the incident radiation and reflect the remainder. Actual results indicate the absorption is about 4%. When the reflector stops rising and starts dropping in temperature about 30 s after the lamp is turned off, it is not because it has reached equilibrium with the halogen lamps and is at the same temperature. Rather, the reflector is still receiving more radiation from the lamps than it radiates outward from its gold surface with a 0.04 emissivity. The inner surface of the reflector is not gold-plated and has a higher emissivity. Energy is radiated inward to the internal structure of the lamp faster than it is radiated outward by the reflector. A thermocouple on the central support rod of the lamp structure was observed to continue to rise in temperature minutes after the reflector started cooling.

5. During a high rate of energy flow into the calorimeter, the response of the sensing wire lags behind. This is because there is a temperature gradient between the inner surface of the calorimeter and the outer surface where the sensing wire is located and because of the additional thermal resistance between the insulated wire and its surrounding groove. When the energy flow rate becomes small, the temperature lag becomes negligible and equilibrium is approached in a second or less. The cooling of the calorimeter becomes noticeable in a matter of minutes.

UNCLASSIFIED

The quantification of the above observations and assumptions requires calculations based on the data. The calculations could have been performed on each run separately and the results averaged, but instead the data were averaged first to produce a "typical run" on which the calculations were then done once. It was reasoned that since the difference between runs was relatively small, that over these short ranges, the relationships should be reasonably linear. The typical run is the average which is the final column of Tables 1, 2, and 3. These three columns are plotted in Fig. 2.

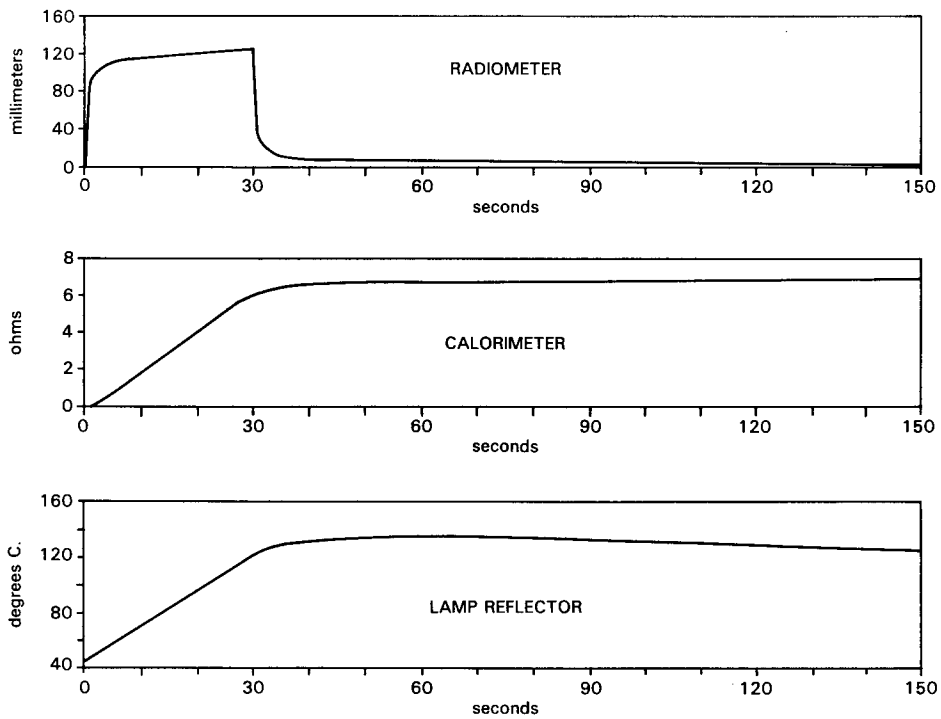


Fig. 2 — Plot of the data averaged from 13 runs

Since the radiometer plot represents power and the resistance plot represents energy, the integral of the radiometer plot should resemble the resistance plot, This integration was accomplished by trapezoidal rule, and the result is listed in column 2 of Table 4. Since the units of the radiometer are millimeters, the units of the integral are millimeter-seconds. The integral of time periods where there was rapid change used measurements at 0.1-s intervals, which are not shown in the table.

The ratio of the integral of the radiometer to the resistance of the calorimeter winding was then inspected. A decrease in the ratio from the time the lamp was turned on until 5 s after it was turned off was noted. This period of large ratio represents the lag in the response of the sensing wire mentioned in observation 5 above. An increase observed in the ratio from that time on represents cooling of the calorimeter. To better compare the integrated radiometer and the calorimeter, the calorimeter was corrected for the cooling loss. A loss of 0.02% per second or 1.2% per minute was found to give the best results which are shown in column 3 of Table 4. The calculation was based on the average value over the previous time interval. It was then observed that the radiometer to resistance ratio was stabilized to about $\pm 0.3\%$ for the period starting 2 s after the lamp was turned off.

From the foregoing it can be seen that a valid comparison should be possible between energy radiated by the lamp and energy sensed by the calorimeter anytime 2 s or more after the lamp is turned off. It is only necessary to find a valid conversion factor to convert the arbitrary units of millimeter seconds

Table 4 — Radiometer and Calorimeter Comparison

| TIME (SECONDS) | INTEGRATED RADIOMETER (MM SEC) | LOSS ADJUSTED CALORIMETER (OHM) | RADIOMETER (.638 KJ/MMS) (KJ) | CALORIMETER (349 KJ/OHM) (KJ) | CALORIMETER LAG (KJ) |
|---|---|---|---|---|---|
| 1 | 58.42 | .02 | 37.28 | 6.97 | 30.31 |
| 2 | 160.86 | .11 | 102.65 | 38.36 | 64.29 |
| 3 | 270.61 | .30 | 172.68 | 104.62 | 68.06 |
| 5 | 498.41 | .71 | 318.05 | 247.61 | 70.44 |
| 10 | 1083.39 | 1.77 | 691.34 | 617.27 | 74.07 |
| 15 | 1680.09 | 2.85 | 1072.12 | 993.91 | 78.21 |
| 20 | 2284.79 | 3.99 | 1457.99 | 1390.43 | 67.56 |
| 25 | 2896.24 | 5.09 | 1848.18 | 1775.78 | 72.40 |
| 30.056 | 3521.57 | 6.23 | 2247.22 | 2171.60 | 75.62 |
| 31 | 3578.25 | 6.44 | 2283.39 | 2245.54 | 37.85 |
| 32 | 3601.33 | 6.56 | 2298.12 | 2287.73 | 10.39 |
| 32.5 | 3609.83 | 6.58 | 2303.54 | 2295.06 | 8.48 |
| 35 | 3641.67 | 6,64 | 2323.86 | 2317.03 | 6.83 |
| 45 | 3715.92 | 6.76 | 2371.24 | 2356.44 | 14.80 |
| 60 | 3772.85 | 6.86 | 2407.57 | 2391.66 | 15.91 |
| 75 | 3805.55 | 6.94 | 2428.44 | 2419.56 | 8.88 |
| 90 | 3828.65 | 7.00 | 2443.18 | 2440.83 | 2.35 |
| 105 | 3846.73 | 7.04 | 2454.71 | 2454.78 | - 0.07 |
| 120 | 3862.93 | 7.06 | 2465.05 | 2462.10 | 2.95 |
| 135 | 3877.71 | 7.09 | 2474.48 | 2472.92 | 1.56 |
| 150 | 3890.91 | 7.10 | 2482.91 | 2476.75 | 6.16 |
| 165 | 3903.36 | 7.11 | 2490.85 | 2480.24 | 10.61 |
| 180 | 3915.36 | 7.12 | 2498.51 | 2484.08 | 14.43 |

of the integrated radiometer to kilojoules. Ideally, if the radiometer could be integrated from the time the lamp was turned on until the time it was cool and the total millmeter seconds compared to the electrical energy, the factor would be found. Unfortunately, the radiometer rapidly drops to very low values that are difficult to measure precisely so that long time integrals become highly inaccurate.

A solution is to assume that the lamp approaches exponential cooling and determine the energy remaining by the best exponential curve fit. This was done by taking the energy radiated by the lamp after turn off in millimeter seconds and treating it as the decay from the unknown value left in the lamp. The best exponential fit was found, and with it, the unknown energy left in the lamp at turn off was found to be 523 mm s. Figure 3 shows the result.

A similar effort was made to fit the warm-up curve of the lamp to determine the stored energy. The result was similar but not as distinctive as for the cooling curve.

The energy indicated by the radiometer then is the 3522 mm s already radiated by the time the lamp is turned off plus 523 mm s yet to be radiated for a total of 4045 mm s. This does not include the energy absorbed by the lamp reflector or yet to be absorbed. The temperature of the reflector 180 s after turn on time is 75.6°C more than it was then. With a heat capacity of 0.764 kJ/°C, this represents 57.8 kJ. In the 15 s between 165 and 180 s the temperature drops 2°C. This represents the transfer of 1.5 kJ from the reflector to the internal structure. At half this rate for the first 30 s and the full rate thereafter, this comes to 16.5 kJ in the structure at 180 s for a total of 74.3 kJ inside the reflector.

The 4045 mm s seen by the radiometer is then equal to the 2630 kJ metered into the lamp plus the 25 kJ starting transient minus the 74.3 kJ absorbed by the reflector. The conversion factor for mm s to kJ is then 0.6381 kJ/mm s. If the lowest ratio of the radiometer to the resistance which occurs at

UNCLASSIFIED

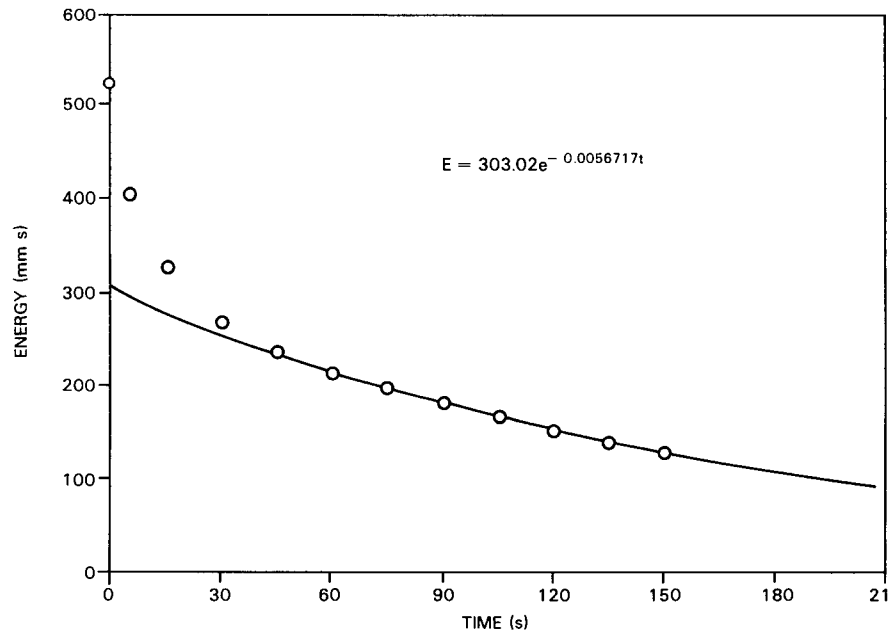


Fig. 3 — Exponential fit to the decay of energy left in the lamp

105 s is chosen, then the calibration of calorimeter No. 06 becomes 0.3487 MJ/Ω. The radiometer and calorimeter are listed in kilojoules in columns 4 and 5 of Table 4 and are plotted in Fig. 4.

The lag of the calorimeter behind the radiometer is clearly visible in Fig. 4. The average lag between 5 and 30 s from column 6 of Table 4 is 73 kJ. The amount by which the calorimeter and radiometer fall short of the electrical input is the sum of the energy absorbed by the lamp reflector and the energy stored in the lamps yet to be radiated.

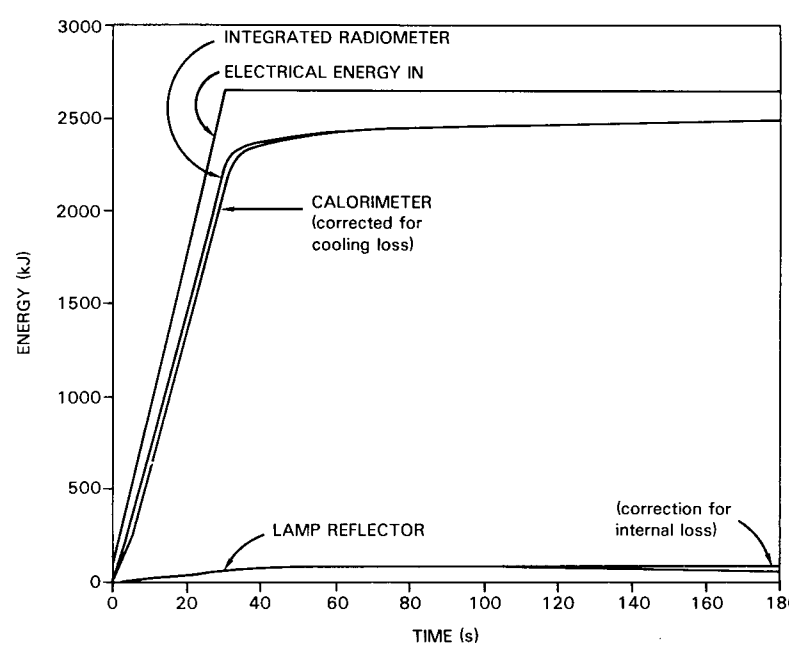


Fig. 4 — Comparison of the total electrical energy, radiated energy, calorimeter response, and reflector absorptance

Less extensive data were taken on calorimeters 04 and 05. It is necessary to codify what has been learned about the lamp in order to calibrate these and other calorimeters.

One of the runs on calorimeter 04 was as short as 15 s, so there is a requirement to determine how much energy is stored in the lamp at the end of such a run. In the case of the average run on calorimeter 06, the percent of the input energy radiated at particular times is shown in Table 5. Although the power for the 13 runs varied from 85.8 to 89.56 kW, no significant pattern could be found in the variation of the percentages radiated so the values given in Table 5 are assumed to be valid for all runs.

Table 5 — Energy Radiated by Lamp

| TIME (SECONDS) | 5 | 10 | 15 | 20 | 25 | 30 |
|---|---|---|---|---|---|---|
| RADIATED ENERGY (1) (KJ) | 318.05 | 691.34 | 1072.12 | 1457.99 | 1848.18 | 2242.80 |
| ELECTRICAL ENERGY (2) (KJ) | 462.55 | 900.10 | 1337.65 | 1775.20 | 2212.75 | 2650.30 |
| PERCENT RADIATED (%) | 68.76 | 76.81 | 80.15 | 82.13 | 83.52 | 84.62 |

(1) SEEN BY RADIOMETER

(2) @ 87.51 KW + 25 KJ

The percentage of power radiated listed in Table 5 is dependent on the power absorbed by the lamp reflector. If the gold coating of the reflector should deteriorate, future calibrations would be affected and Table 5 would have to be recalculated. A change in the maximum temperature rise of the lamp reflector indicated by the thermocouples inside the reflector would signal the deterioration of the reflector.

The method of calibration then is to determine the energy radiated by the lamp by multiplying the electrical energy metered into the lamp including the 25 kJ starting transient by the percentage in Table 5, interpolating or extrapolating as necessary to determine the percentage at lamp turn off time. The average lag of 73 kJ is then deducted, and the remaining energy is compared to the resistance change in the calorimeter at the time of lamp turn off. This may be expressed as:

$$Q = ((Ee + 0.025)P - 0.073)/\Delta R \quad \text{MJ}/\Omega \tag{1}$$

where $Q$ is the calibration constant, $Ee$ is the electrical energy metered in, $P$ is the percent from Table 5, and $\Delta R$ is the resistance change in the calorimeter at lamp turn off.

By using $Ee = 2.630$ from Table 1, $P = 0.8463$, extrapolated to 30.06 s, from Table 5 and $\Delta R = 6.21$ from Table 3, $Q$ is found to be 0.3501 MJ/Ω for the average run on calorimeter 06. This differs by 0.4% from the 0.3487 MJ/Ω previously found for calorimeter 06. Had the value $\Delta R = 6.23$ (corrected for cooling loss) been used from Table 4 the result would have been closer, but it was desired to demonstrate the accuracy of Eq. (1) when used on unadjusted data as will be done in the calibration of other calorimeters.

UNCLASSIFIED

## CALIBRATION OF THE CALORIMETERS

The calibration of calorimeter 06 has already been done in the previous section. It will now be done again by using Eq. (1) on the data from each of the 13 runs so that the standard deviation may be calculated. Table 6 summarizes the 13 runs on calorimeter 06. The calibration constant calculated by use of Eq. (1) is 0.350 ± 0.004 MJ/Ω. The standard deviation is 1.1%. The largest deviation in the 13 runs was 2%.

Table 6 — Calorimeter 06 Calibration

| RUN | ELECTRICAL ENERGY (KJ) | RADIATED ENERGY (%) | RESISTANCE CHANGE (OHMS) | CALIBRATION CONSTANT (MJ/OHM) | DIFFERENCE FROM AVERAGE |
|---|---|---|---|---|---|
| 3 | 2726 | 84.72 | 6.52 | 0.346 | -.004 |
| 4 | 2622 | 84.47 | 6.30 | 0.343 | -.007 |
| 5 | 2550 | 84.56 | 5.91 | 0.356 | .006 |
| 7 | 2590 | 84.58 | 6.18 | 0.346 | -.004 |
| 9 | 2651 | 84.69 | 6.17 | 0.355 | .005 |
| 10 | 2620 | 84.60 | 6.17 | 0.351 | .001 |
| 12 | 2659 | 84.67 | 6.18 | 0.356 | .006 |
| 13 | 2594 | 84.58 | 6.14 | 0.349 | -.001 |
| 16 | 2610 | 84.57 | 6.16 | 0.350 | .000 |
| 17 | 2621 | 84.63 | 6.23 | 0.348 | -.002 |
| 18 | 2585 | 84.54 | 6.04 | 0.353 | .003 |
| 19 | 2641 | 84.71 | 6.22 | 0.351 | .001 |
| 20 | 2726 | 84.91 | 6.46 | 0.350 | .000 |
| AVERAGE | | | | 0.350 | |
| STANDARD DEVIATION | | | | | .004 |

Table 7 summarizes the five runs on calorimeter 04. The calibration constant calculated by use of Eq. (1) is 0.315 ± 0.005 MJ/Ω. The standard deviation is 1.6%. The largest deviation was 2.2%.

Table 7 — Calorimeter 04 Calibration

| RUN | RUN LENGTH (SECONDS) | ELECTRICAL ENERGY (KJ) | RADIATED ENERGY (%) | RESISTANCE CHANGE (OHMS) | CALIBRATION CONSTANT (MJ/OHM) | DIFFERENCE FROM AVERAGE |
|---|---|---|---|---|---|---|
| 1 | 31.15 | 2804 | 84.87 | 7.33 | 0.318 | .003 |
| 2 | 30.73 | 2778 | 84.78 | 7.15 | 0.322 | .007 |
| 3 | 25.28 | 2247 | 83.58 | 5.72 | 0.319 | .004 |
| 4 | 15.39 | 1353 | 80.30 | 3.36 | 0.308 | -.007 |
| 5 | 20.64 | 1862 | 82.31 | 4.77 | 0.310 | -.005 |
| AVERAGE | | | | | 0.315 | |
| STANDARD DEVIATION | | | | | | .005 |

Table 8 summarizes the six runs on calorimeter 05. The calibration constant calculated by use of Eq. (1) is 0.317 ± 0.003 MJ/Ω. The standard deviation is 1%. The largest deviation in the six runs was 2%.

Because of the urgency for shipping calorimeter 07, only 3 runs were made. Table 9 summarizes these runs. The calibration constant calculated by use of Eq. (1) is 0.147 MJ/Ω. The largest deviation from the average of the three runs was 0.004 MJ/Ω or about 3%.

Table 8 — Calorimeter 05 Calibration

| RUN | RUN LENGTH (SECONDS) | ELECTRICAL ENERGY (KJ) | RADIATED ENERGY (%) | RESISTANCE CHANGE (OHMS) | CALIBRATION CONSTANT (MJ/OHM) | DIFFERENCE FROM AVERAGE |
|---|---|---|---|---|---|---|
| 1 | 30.10 | 2724 | 84.64 | 7.17 | 0.314 | -.003 |
| 2 | 30.98 | 2794 | 84.84 | 7.35 | 0.316 | -.001 |
| 3 | 30.04 | 2695 | 84.63 | 7.10 | 0.314 | -.003 |
| 4 | 29.18 | 2673 | 84.44 | 6.95 | 0.317 | .000 |
| 5 | 29.37 | 2702 | 84.48 | 6.91 | 0.323 | .006 |
| 6 | 29.83 | 2744 | 84.58 | 7.20 | 0.315 | -.002 |
| AVERAGE | | | | | 0.317 | |
| STANDARD DEVIATION | | | | | | .003 |

Table 9 — Calorimeter 07 Calibration

| RUN | RUN LENGTH (SECONDS) | ELECTRICAL ENERGY (KJ) | RADIATED ENERGY (%) | RESISTANCE CHANGE (OHMS) | CALIBRATION CONSTANT (MJ/OHM) | DIFFERENCE FROM AVERAGE |
|---|---|---|---|---|---|---|
| 1 | 37.70 | 3429 | 86.29 | 19.30 | 0.151 | .004 |
| 2 | 25.72 | 2310 | 83.68 | 12.93 | 0.145 | -.002 |
| 3 | 20.70 | 1859 | 82.32 | 10.15 | 0.146 | -.001 |
| AVERAGE | | | | | 0.147 | |

## DISCUSSION

The response of the calorimeter is based on the heat capacity of the aluminum and the temperature coefficient of resistance for the copper wire. Since physical properties drift very little, the calibration of the calorimeters should not require frequent recalibration. Only if damage occurs and repair changes the mass of aluminum or length and resistance of the wire, will recalibration be required.

Other factors determine how much of the input energy is seen by the calorimeter. Misalignment or deterioration of the spreading mirror or inner surface may affect the amount of energy scattered back out through the entrance or absorbed by the mirror. These factors do not affect the basic calibration, however.

Methods of installation and operation may affect the accuracy of readings. The calorimeter should be well aligned with the input beam. Electronic packages which output a voltage proportional to the resistance change were provided with two of the calorimeters and should be used with all. A calibration resistance in the package should be switched in before and after each run. Since the calorimeters are very sensitive to electrical disturbances, some locations will require heavy filtering and judicious grounding. Careful attention should be given to the timing of the beam switch mechanism when using the calorimeter to measure power. Concern for these and other considerations mentioned in the operating instructions in Appendix A should assure reliable readings.

The standard deviation of the lamp calibration runs on calorimeter 06 (1.1%) is indicative of the precision with which measurements may be made with these calorimeters. It is probable that if the data taking were automated and digitized, the precision would improve.

UNCLASSIFIED

The accuracy of the calibration is more difficult to quantify. The largest uncertainty is in the energy stored in the individual lamps. According to the curve fit, three quarters of the energy stored in the lamp at turn off has been radiated 150 s later. The existence of the remaining quarter is based only on the curve fit and at worst could be no less than 0. On the other hand, twice this amount could be assumed. More than that would exceed reasonable estimates for the heat capacity and temperature in the lamps. Thus, ±25% is taken as the uncertainty in the energy stored in the lamps. This and the other factors considered in Appendix B lead to a probable error of ±4% in these measured calibration constants.

The reason for using the lamp was to obtain a calibration independent of the physical constants which are not accurately known for the materials used in the calorimeters. An effort was made to determine the heat capacity of the 6061 aluminum alloy by testing a sample from one of the hemispheres in a scanning calorimeter. Unfortunately, bad results were obtained due to a lack of familiarity with the procedure, and the experiment was not repeated.

Calibrations for the four calorimeters based on the most reliable published data for pure aluminum and hard-drawn annealed copper wire were calculated by using the formula:

$$Q = M\ Cm/R\ \alpha \qquad \text{kJ}/\Omega \tag{2}$$

where $M$ is the mass of the aluminum in kg, $Cm$ is the heat capacity of aluminum in J/g °C, $R$ is the resistance of the wire winding in $\Omega$, and $\alpha$ is the temperature coefficient of resistance for copper in $\Omega/\Omega$ °C. The value of these quantities and the calculated calibration constant for each of the calorimeters are compared with the lamp calibrations in Table 10. Each of the calorimeters was weighed on completion, and the weight of lifting eyes, etc., was deducted from the total. An additional 10 kg was deducted from the large calorimeters to account for the estimated mass at the ends of the calorimeter that neither has windings nor absorbs much heat. No such quantity was estimated and deducted for calorimeter 07. The winding resistance of each calorimeter was measured with a simple volt-ohmmeter at a time when the ambient temperature was approximately 23°C. The corresponding values of $Cm$ and $\alpha$ used in Table 10 are 0.898 J/g°C and 0.00390 $\Omega/\Omega$°C. The probable error in the calculated calibration constants from Appendix B is 3.3%.

Table 10 — Calibration Comparisons

| SERIAL NO. | MASS KG | RESISTANCE OHMS | CALIBRATION CONSTANT MJ / OHM EQ (1) | EQ (2) | DIFFERENCE % |
|---|---|---|---|---|---|
| 04 | 513 | 358 | .315 | .330 | 4.6 |
| 05 | 510 | 363 | .317 | .324 | 2.2 |
| 06 | 536 | 365 | .350 | .338 | -3.6 |
| 07 | 67.9 | 110 | .147 | .142 | -3.5 |

T = 23°C  $C_M$ = 0.898 J/GM°C  A = 0.00390 OHMS/OHM °C

The differences between the two methods of calibration are less than ±5%, and both may be equally reliable. However, the calculation is much easier to perform than the lamp calibration, and a little more effort in determining the two material coefficients and reducing the uncertainty in effective mass and resistance could make calculated calibration significantly more accurate than lamp calibration, eliminating the need for lamps altogether.

After the probable error in the basic calibration is reduced as much as possible, say from 3.3% to 1.5%, and correction is made for the two losses, mirror absorption and retroscattering, and if uncertainty in timing of the shutter mechanism warrants it, further accuracy could be obtained from slight modifications in the operating procedure and electronics, such as keeping track of the ball temperature and resistance on a continuous basis (no automatic zero), and calculating energy changes from the polynomial expansions.

## SUMMARY

Four spherical heat sink calorimeters with serial numbers 04 through 07 were built at NRL for use in monitoring laser power in the Navy High Energy Laser Program. All four calorimeters were calibrated at NRL by use of a 90 kW lamp. An extensive study was made to characterize the transfer of energy from the lamp to one of the calorimeters (serial 06). This characterization was then used in the calibration of all four.

The standard deviations of the data indicate the precision of the calorimeters is within 2%. The accuracy is more difficult to quantify, but arguments have been made that the probable errors in the calibrations are well within 5%. The differences between lamp-based, measured calibration constants and calculated calibration constants based on handbook values of physical constants vary from −3.6% to 4.6% indicating that a calculated calibration constant using the heat capacity of pure aluminum may be as accurate as a high-power lamp calibration for these four calorimeters.

## ACKNOWLEDGMENT

The authors thank Mr. Fred Fluhr, designer of the calorimeters and the electronic packages, for assistance with the calibration.

## REFERENCES

1. G. W. Zeiders, Jr. and R. A. Hella, "High Power Laser Energy Measuring Device," United States Patent No. 3,783,685, Jan. 8, 1974.

2. F. R. Fluhr, R. B. Brown, and G. L. Hall, "Technique for Calibrating High Energy Laser Calorimeters," NRL Report 8152, Oct. 1977.

UNCLASSIFIED

## Appendix A

## CALORIMETER OPERATION

The two electronics packages supplied with the calorimeters have several features. The main feature is a constant current generator that enables the package to provide a voltage proportional to the change in the resistance of the calorimeter head. Another feature is a built-in calibration resistor that may be switched in series with the resistance of the calorimeter head so that a change in the output voltage may be calibrated with a known resistance change. The packages also have an automatic zeroing circuit that maintains the output voltage at zero for a reasonable range of calorimter head temperature drift with ambient temperature. When making a measurement, the automatic zero is disabled so that the output voltage rises from zero to a value that is proportional to the resistance change in the calorimeter head.

There are two possible ways to choose the value of the calibration resistor. One is to choose a precision resistor with a value of an integral number of ohms. The recording device may then be conveniently scaled in ohms. A measured resistance change is then used with the calibration constant for the calorimeter head to calculate the energy received by the calorimeter. The other way is to make up a resistor with a value equal to the resistance change to be expected for an integral energy change in a particular calorimeter head based on its calibration constant. The recording device may then be conveniently scaled in energy units.

One of the electronic packages was shipped with a 10 Ω precision resistor, and the other was shipped with a resistor of approximately 15 Ω which would produce a voltage corresponding to 5 MJ for a calorimeter head with a calibration constant of about 0.33 MJ/Ω. When the resistor is chosen to represent energy, it has to be changed each time the package is matched to a different head. In either case, the calibrate resistor should have a low temperature coefficient and its switching relay should have negligible contact resistance.

The circuit board in the electronic packages is provided with two test points and two potentiometer adjustments. Test point one and the zero adjustment are provided to match the electronics to the calorimeter head, whose resistance will vary with ambient temperature. The zero potentiometer should be adjusted for a zero voltage reading at test point one. Serious mismatch may result in saturating the final amplifier. Test point two and the gain adjustment are provided so that the calibration resistor may be used to calibrate the output voltage such that 1 V might represent a 1 MJ change, for instance. Since maintaining this calibration to desired tolerance might require daily adjustment and the inconvenience of opening the package, it is recommended that the calibration resistor be used as a reference for each measurement and the calibration of the voltage not be relied on. In this case, the gain potentiometer should be adjusted for a convenient voltage output range for the expected calorimeter resistance change. The zero adjustment may not need attention except in environments where the temperature varies widely.

Figure A1 is a block diagram of the electronics package and shows the various connections to be made at the time of installation. The resistance of the wire winding on the calorimeter is connected to the electronics by connector J1. The winding on the calorimeter picks up electrical noise, and a low pass filter may be required. If the noise is not too great, the filter may be placed after the electronics. Whether to ground the body of the calorimeter and how to ground may be decided on the basis of observing the output of the electronics on an oscilloscope. It is likely that there will be less noise if the body of the calorimeter is not grounded. Note that if there is a break in the insulation of the wire

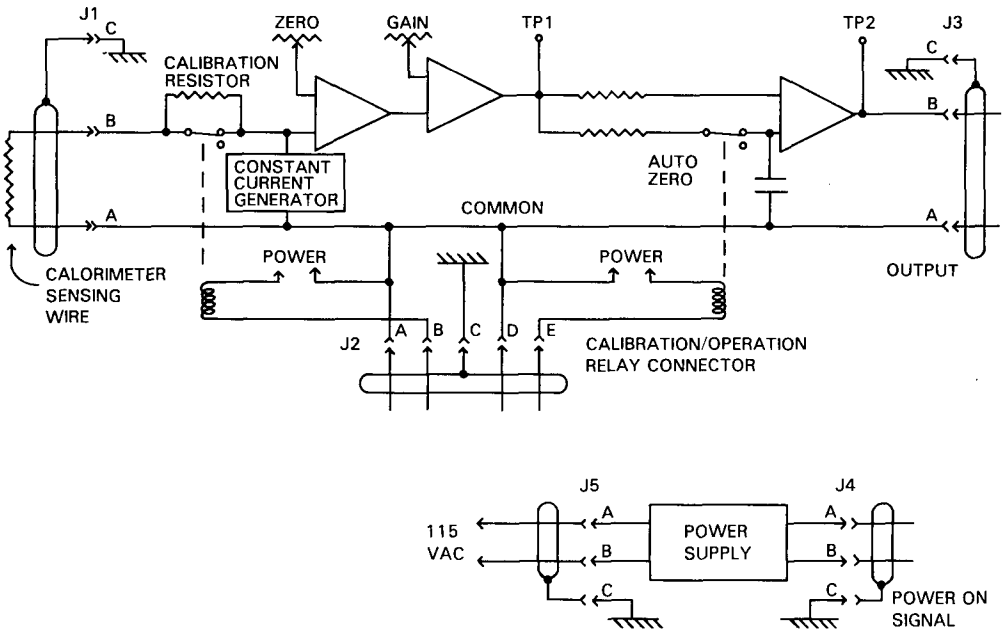


Fig. A1 — Calorimeter electronics block diagram

winding that permits a short to the aluminum body of the calorimeter, this could result in a ground loop in the signal return line which is marked common in Fig. A1. The signal return line is not connected to the chassis ground, but the chassis is connected to the power ground when a three-wire power cable is connected to connector J5. This should be kept in mind when deciding what to do with the chassis ground at the remote ends of the various cables. Connector J3 should be connected for recording when a power measurement is to be made. The output at J3 will normally be 0 V except when a measurement or calibration is being made. If the calorimeter winding is open or there is no connection at J1, then the output at J3 will saturate at a level greater than 10 V. Checking for such a saturation can determine whether the calorimeter is working and ready to make a measurement. Connector J4 provides a closed circuit that signals that both power supply voltages are present. If the circuit at J4 is open, it is unlikely that the electronics are working.

Control and operation of the calorimeter are exercised through the J2 connector. It is by closing circuits on this connector that the calibration resistor may be inserted in series with the calorimeter winding and the auto zero disabled. Figure A2 illustrates the recommended sequence. Time B is the time that the laser beam begins to enter the calorimeter, and time E is the time that the beam is shut out of the calorimeter. Time B-3 is thus about 3 s before the beam is expected and the time that the autozero is disabled. About 2 s before time B, the calibration resistor is inserted for 1 s. The laser beam is then admitted to the calorimeter long enough that the beginning and end time may be measured with an accuracy comparable to that desired in the measurement of the laser power and long enough that the voltage increase may also be determined with that accuracy. The time should not be so long that the amplifier will saturate.

After the beam is shut off, 2 to 3 s are allowed so that the level at which the signal levels off may be definitely established, and then at time Z the auto zero is enabled again for about 1 s and then disabled again for the last time for about 3 s in the middle of which the calibration resistor is inserted for 1 s.

If the above procedure is followed, it should provide a calibration of the voltage output before and after the measurement and thus document that the calorimeter did not drift or fail during the measurement, as well as provide a scale for the measurement.

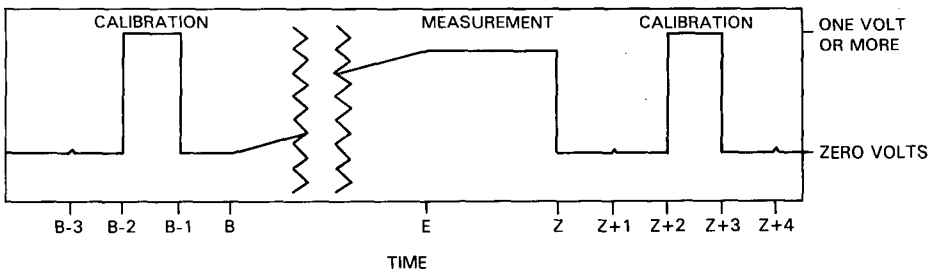


Fig. A2 — Sample output of calorimeter electronics

A calibration check could be used periodically during a waiting period to demonstrate that the calorimeter is working.

The signal from the electronics package represents only the energy that is absorbed by the body of the calorimeter and does not include the energy that is scattered back out of the calorimeter or absorbed in the spreading mirror. The scatter is expected to be negligible, but the mirror may absorb 2% or more of the energy entering the calorimeter. This may be measured by placing a thermocouple on the back of the mirror and calculating the energy from the temperature, weight, and heat capacity of the copper. The temperature of the mirror is expected to reach equilibrium about 30 s after irradiation ceases. This correction of a few percent could be factored into the calibration of the recording device if desired.

UNCLASSIFIED

## Appendix B

## UNCERTAINTY IN MEASURED AND CALCULATED CALORIMETER CALIBRATION CONSTANT

### MEASURED VALUE

To obtain an estimate of the uncertainty in the measured calorimeter calibration constant, values obtained from the following table were used. The assumed values of accuracy are larger than the original values, to allow for drift which might have occurred since the various instruments were calibrated.

| Quantity/ Instrument | Original Accuracy | Assumed Accuracy | Nominal Value |
|---|---|---|---|
| Electrical Power/Meter | ±0.5% | ±1% | 0.96 kW |
| Ratio/Current Transformer | ±0.5% | ±1% | 100:1 |
| Runtime/Chart Recorder | ±0.1% | ±1% | 30s |
| Resistance Change/(several instruments are involved) | | ±1.6% total | 6 Ω |
| Amplifier Linearity | ±0.4% | ±1% | |
| Resistor Accuracy | ± 0.1% | ±1% | |
| Chart Reading Error (1) | ±0.3% | ±0.5% | |
| Chart Reading Error (2) | ±0.3% | ±0.5% | |
| Energy Remaining in Calibration Lamp at Turnoff, E | — | ±25% | 334 kJ |

The measured calorimeter calibration constant $Q$ is given by

$$Q = (\text{Elect. Pwr.} \times \text{Ratio} \times \text{Runtime} - E)/\text{Res. Change.}$$

Resistance change is a function of amplifier linearity in the recorder and calorimeter electronics package, the accuracy and stability of the calibrate resistor, the reading of the calibrate pulse on the chart recorder, and the reading of the calorimeter trace on the chart recorder. The combined assumed accuracy for resistance change is ±1.6%. The nominal value of $E$ at lamp turn off was estimated to be 334 kJ on p. 8 (product of 523 mm s and 0.638 kJ/mm s). The uncertainty was estimated on p. 13 to be 25% or ±84 kJ, which is 3.2% of the total electrical energy.

The "probable error" is

$$\pm[(.01)^2 + (.01)^2 + (.01)^2 + (.016)^2 + (.032)^2]^{1/2} = \pm 4\%$$

UNCLASSIFIED

and the "possible error" is

$$\pm(1.0\% + 1.0\% + 1.0\% + 1.6\% + 3.2\%) = \pm 8\%.$$

## CALCULATED VALUE

To obtain an estimate of the uncertainty in a calculated calibration constant, the following handbook and nominal values are used: $Cm$ (pure aluminum) = 0.215 ± 0.001 cal/g°C = 0.898 ± 0.004 kJ/kg°C @ 25°C

$$\alpha \text{ (commercial copper)} = 0.00390 \pm 0.00005\ \Omega/\Omega\,°\text{C @ } 25°\text{C}$$

$$R = 360 \pm 3.6\,\Omega \text{ @ } 23\,°\text{C}$$

$$M = 515 \pm 10 \text{ kg}.$$

The calculated calorimeter calibration constant is then given by

$$Q = MCm/R\alpha.$$

The uncertainties in $Cm$ and $\alpha$ are obtained from published values and are about 0.5% and 1.3%, respectively. The uncertainty of 1% in $R$ is larger than can be measured to allow for the possibility that $R$ may not be measured at exactly the same temperature as $Cm$. It is also possible to measure $M$ to better than 1.9%, but because of uncertainties on the order of 10 kg in the effective mass of some calorimeters, this is taken to be the uncertainty.

The effect of these uncertainties gives the following "probable error" for $Q$ for a pure aluminum calorimeter:

$$\pm[(.005)^2 + (.013)^2 + (.01)^2 + (.019)^2]^{1/2} = \pm 2.6\%,$$

and the "possible error" is:

$$\pm(0.5\% + 1.3\% + 1.0\% + 1.9\%) = \pm 4.7\%.$$

Thus, it is seen that if the calorimeter were made from pure aluminum, the uncertainty in the value of $Q$ due to uncertainty in the value of heat capacity is insignificant compared with the other contributions. The biggest improvement could be made in reducing the uncertainty in mass. For aluminum alloy[B1] the uncertainty in heat capacity appears to be about 2%, making it slightly more significant than the other contributions and the "probable error" is 3.3%. This is slightly less than the 4% value for the measured case. Further reduction of this uncertainty would require a measured value of $Cm$ and a more accurate determination of effective mass.

[B1] Y.S. Touloukian, ed., *Thermophysical Properties of High Temperature Solid Materials* (Macmillan Co., New York, 1967), Vol. I, pp. 11-12.