UNCLASSIFIED

NRL Report 8651

On the Solution of a Fokker-Planck Equation in the Presence of Correlated Noise

HENRY N. HO

Advanced Systems Branch
Aerospace Systems Division

and

ROGER H. LANG

The George Washington University
Washington, D.C.

December 29, 1982

NAVAL RESEARCH LABORATORY
Washington, D.C.

Approved for public release; distribution unlimited.

UNCLASSIFIED

REPORT DOCUMENTATION PAGE

READ INSTRUCTIONS BEFORE COMPLETING FORM

1. REPORT NUMBER
NRL Report 8651

2. GOVT ACCESSION NO.

3. RECIPIENT'S CATALOG NUMBER

4. TITLE (and Subtitle)
ON THE SOLUTION OF A FOKKER-PLANCK EQUATION IN THE PRESENCE OF CORRELATED NOISE

5. TYPE OF REPORT & PERIOD COVERED
Final report on one phase.

6. PERFORMING ORG. REPORT NUMBER

7. AUTHOR(s)
Henery N. Ho and Roger H. Lang

8. CONTRACT OR GRANT NUMBER(s)

9. PERFORMING ORGANIZATION NAME AND ADDRESS
Naval Research Laboratory
Washington, DC 20375

10. PROGRAM ELEMENT, PROJECT, TASK AREA & WORK UNIT NUMBERS
62000N
79-0701-M-3

11. CONTROLLING OFFICE NAME AND ADDRESS
Office of Naval Research
Arlington, VA 22217

12. REPORT DATE
December 29, 1982

13. NUMBER OF PAGES
12

14. MONITORING AGENCY NAME & ADDRESS(if different from Controlling Office)

15. SECURITY CLASS. (of this report)
UNCLASSIFIED

15a. DECLASSIFICATION/DOWNGRADING SCHEDULE

16. DISTRIBUTION STATEMENT (of this Report)
Approved for public release; distribution unlimited

17. DISTRIBUTION STATEMENT (of the abstract entered in Block 20, if different from Report)

18. SUPPLEMENTARY NOTES

19. KEY WORDS (Continue on reverse side if necessary and identify by block number)
Phase-locked-loop analysis
Fokker-Planck Equation

20. ABSTRACT (Continue on reverse side if necessary and identify by block number)

The Fokker-Planck equation corresponding to the first-order phase-locked loop in the presence of exponentially correlated noise is studied. For the case of zero signal-to-noise ratio and zero initial detuning an analytical solution is obtained for the Fokker-Planck equation, reduced modulo 2π. The solution is the transition probability density function (p.d.f.) and gives explicit relationships between loop parameters and the transient behavior of the phase error process. From the transition p.d.f. the transition cumulative distribution function and the time-dependent variance of phase error are easily obtained. At sufficiently small values of Dt, where D is the diffusion constant and t is the

(Continued)

DD FORM 1 JAN 73 1473 EDITION OF 1 NOV 65 IS OBSOLETE
S/N 0102-014-6601

20. ABSTRACT (Continued)

time, the transition p.d.f. provides a good approximation to the probability of loss of lock in the loop.

UNCLASSIFIED

CONTENTS

INTRODUCTION 1

FOKKER-PLANCK EQUATION 2

SOLUTION OF THE REDUCED EQUATION 3

NUMERICAL RESULTS 7

SUMMARY AND DISCUSSIONS 7

ACKNOWLEDGMENTS 7

REFERENCES 9

UNCLASSIFIED

ON THE SOLUTION OF A FOKKER-PLANCK EQUATION IN THE PRESENCE OF CORRELATED NOISE

INTRODUCTION

Tracking devices employing the phased-locking principle are widely used in modern communications, radar tracking, navigation, guidance, and control. Such devices include the phase-locked loops (PLLs) [1], Costas loops [2], data-aided loops [3], hybrid loops [4], and symbol synchronizers [5], which are essentially digital PLLs. The stochastic differential equations that describe the operations of these loops [1-5] are well known, and Lindsey [6] shows that these equations have similar forms. Thus a study of the PLL system can provide new information concerning this important device as well as reveal operational characteristics of the other tracking loops [2-5].

In the design and analysis of PLLs two loop characteristics are of major concern: acquisition of a signal's phase and the loss of lock. Both of these characteristics depend on the time-dependent or transition probability density function (p.d.f.) of loop phase error. Under certain suitable assumptions of noise conditions the transition p.d.f. of a PLL is described by a Fokker-Planck equation, and much attention has been directed to the solution of this equation. Previous transient analysis of PLLs have been mainly concerned with first-order PLLs in the presence of white Gaussian noise (WGN). Dominiak and Pickholtz [7] employed numerical techniques developed by von Neumann and Richtmyer [8] to study the Fokker-Planck equation in the presence of WGN. La Frieda and Lindsey [9] used eigenfunction expansions and numerically evaluated the eigenvalues for the transition p.d.f., with the phase error reduced modulo 2π. Ohlson and Rutherford [10] used numerical integration to evaluate the transient behavior, without the modulo-2π condition. Recently El-Masry [11] used a Fourier series with time-varying coefficients to represent the p.d.f. with the phase error reduced modulo 2π.

These previous studies [7-11] provide essentially a complete understanding of the first-order PLL in the presence of WGN. However, nothing has been known about the transient behavior of the first-order PLLs in the presence of correlated noise. The assumption of correlated noise in PLL systems is probably more realistic than the WGN assumption when the phase detector is preceded by bandpass filters.

In this report the first-order PLL in the presence of exponentially correlated noise will be studied. First the Fokker-Planck equation will be presented together with the corresponding initial and boundary conditions. Unfortunately this Fokker-Planck equation cannot be solved. However, for the case of a zero signal-to-noise ratio an analytical solution can be found and will be presented. It will be shown that the solution is a convergent series which satisfies the initial and boundary conditions and is differentiable with respect to phase error ϕ and time t. Because the solution obtained is the transition p.d.f. of the modulo-2π phase-error process, other loop statistics such as the cumulative distribution function and variance of phase error can be easily derived. Another advantage of the analytical-solution approach of this report is that the effect of noise bandwidth on the transient phase-error process $\phi(t)$ can be shown explicitly.

Manuscript approved August 3, 1982.

FOKKER-PLANCK EQUATION

Let $\phi(t)$ be the phase error of a first-order PLL (Fig. 1). Assume a sinusoidal input and a correlated noise process $x(t)$. The phase error $\phi(t)$ satisfies the nonlinear stochastic differential equations

$$\left.\begin{aligned} \frac{d\phi(t)}{dt} &= \Omega_0 - AK \sin \phi(t) - Kx(t) \\ \frac{dx(t)}{dt} &= -\beta x(t) + \beta n(t) \end{aligned}\right\}, \quad |\phi| \leqslant \pi,\ |x| \leqslant \infty,\ 0 \leqslant t \leqslant \infty, \tag{1}$$

where $\Omega_0 = \omega - \omega_0$ is the initial detuning, A is the received signal amplitude, K is the loop gain, $\sin \phi(t)$ is the input nonlinearity, $x(t)$ is the exponentially correlated process (also called colored noise), β is a constant, and $n(t)$ is assumed to be a WGN process with a zero mean and a two-sided spectral density of $N_0/2$ W/Hz. Because $n(t)$ is a WGN process, the solution to (1) has vector Markov properties, and the transition p.d.f. satisfies the forward Fokker-Planck equation [12]:

$$\frac{\partial p}{\partial t} = -\frac{\partial}{\partial \phi}\left[(\Omega_0 - AK \sin \phi - Kx)p\right] + \beta \frac{\partial}{\partial x}(px) + \frac{N_0}{4}\beta^2 \frac{\partial^2 p}{\partial x^2},$$

$$0 \leqslant t \leqslant \infty,\ |\phi| \leqslant \pi,\ |x| \leqslant \infty, \tag{2}$$

where $p = p(\phi, x, t \mid \phi_0, x_0, t_0)$ is the modulo-2π transition p.d.f. of ϕ and x. The initial and boundary conditions are governed by the physics of our problem. We assume that the PLL is in lock at initial time t_0. Thus the initial condition is

$$\lim_{t \to t_0} p(\phi, x, t \mid \phi_0, x_0, t_0) = \delta(\phi - \phi_0)\, \frac{e^{-x^2/2\sigma_I^2}}{\sqrt{2\pi\sigma_I^2}}, \tag{3}$$

where $\delta(\ldots)$ is the Dirac delta function. In (3), $x(t_0)$ is assumed to be normal with a zero mean and variance σ_I^2 and to be independent of $x(t)$ to ensure that $x(t)$ is stationary [13]. The boundary conditions, which are determined from the modulo-2π assumptions, are

$$p(-\pi, x, t) = p(\pi, x, t) \quad \text{and} \quad \frac{\partial p}{\partial x}(-\pi, x, t) = \frac{\partial p}{\partial x}(\pi, x, t) \tag{4a}$$

and

$$p(\phi, -\infty, t) = p(\phi, \infty, t) = \frac{\partial p}{\partial x}(\phi, -\infty, t) = \frac{\partial p}{\partial x}(\phi, \infty, t) = 0. \tag{4b}$$

In addition the transition p.d.f. satisfies the normalization condition

$$\int_{-\infty}^{\infty} \int_{-\pi}^{\pi} p(\phi, x, t \mid \phi_0, x_0, t_0)\, dx d\phi = 1, \quad \text{for all } t. \tag{5}$$

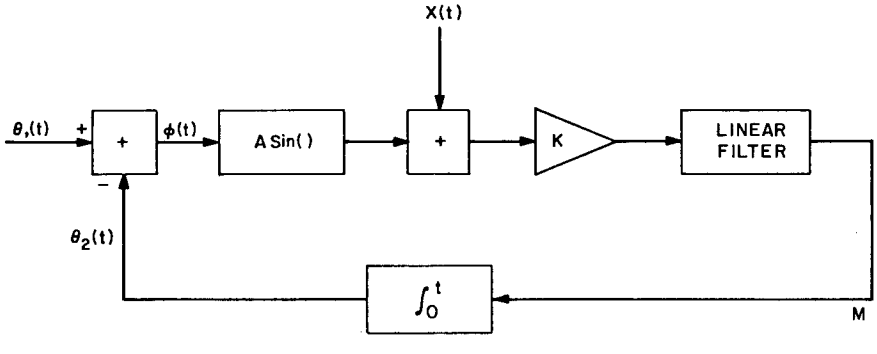

Fig. 1 — Model of a first-order phase-locked loop

UNCLASSIFIED

Let us consider (2) with zero initial detuning ($\Omega_0 = 0$) with the substitutions

$$D' = \frac{N_0\beta^2}{4}, \quad \tau = D't, \quad \epsilon = \frac{AK}{D'}, \quad k_1 = \frac{K}{D'}, \text{ and } k_2 = \frac{\beta}{D'}. \tag{6}$$

Equation (2) can now be written as

$$\frac{\partial p}{\partial \tau} = \epsilon\left(p \cos\phi + \sin\phi \frac{\partial p}{\partial \phi}\right) + k_1 x \frac{\partial p}{\partial \phi} + k_2 p + k_2 x \frac{\partial p}{\partial x} + \frac{\partial^2 p}{\partial x^2}. \tag{7}$$

Unfortunately neither analytic nor numerical solutions of (7) are available. For the case of a zero signal-to-noise ratio ($\epsilon = 0$) and zero initial detuning ($\Omega_0 = 0$) it will be shown that an analytical solution can be obtained for the reduced equation

$$\frac{\partial p}{\partial \tau} = \left(k_1 x \frac{\partial}{\partial \phi} + k_2 + k_2 x \frac{\partial}{\partial x} + \frac{\partial^2}{\partial x^2}\right) p \equiv Lp. \tag{8}$$

SOLUTION OF THE REDUCED EQUATION

Let us assume as a solution of (8) an expansion of the form

$$p(\phi, x, \tau) = \sum_{\substack{mn \\ m=0,\pm1,\pm2,\ldots \\ n=0,1,1,\ldots}} A_{mn}(\tau) V_{mn}(\phi, x), \tag{9}$$

where the $A_{mn}(\tau)$ depend only on τ and the $V_{mn}(\phi, x)$ depend on ϕ and x. Because L in (8) is independent of τ, one may use the method of separation of variables. With λ_{mn} as the separation parameter, the $A_{mn}(\tau)$ can be shown to be of the form

$$A_{mn}(\tau) = C_{mn}\, e^{\lambda_{mn}\tau}, \tag{10}$$

where the C_{mn} are unknown coefficients and the λ_{mn} are eigenvalues which satisfy

$$LV_{mn}(\phi, x) = \lambda_{mn} V_{mn}(\phi, x) \tag{11}$$

with boundary conditions

$$V_{mn}(-\pi, x) = V_{mn}(\pi, x) \text{ and } \frac{\partial V_{mn}}{\partial \phi}(-\pi, x) = \frac{\partial V_{mn}}{\partial \phi}(\pi, x) \tag{12a}$$

and

$$V_{mn}(\phi, -\infty) = V_{mn}(\phi, \infty) = \frac{\partial V_{mn}}{\partial x}(\phi, -\infty) = \frac{\partial V_{mn}}{\partial x}(\phi, \infty) = 0. \tag{12b}$$

To solve (11), we note that the variables ϕ and x are also separable. We let α_m be the separation parameter and write $V_{mn}(\phi, x) = \Phi_m(\phi) X_{mn}(x)$, which results in an equation in ϕ given by

$$\frac{1}{\Phi_m}\frac{\partial \Phi_m}{\partial \phi} = \alpha_m, \quad \Phi_m(-\pi) = \Phi_m(\pi). \tag{13}$$

Solving (13) and requiring that Φ_m be normalized, we obtain

$$\Phi_m(\phi) = \frac{1}{2\pi} e^{im\phi}, \quad i = \sqrt{-1}, \quad m = 0, \pm1, \pm2, \ldots. \tag{14}$$

The remaining equation in x has the form

$$\frac{\partial^2 X_{mn}}{dx^2} + k_2 x \frac{dX_{mn}}{dx} + (k_2 - \lambda_{mn} - \alpha_m k_1 x) X_{mn} = 0, \tag{15a}$$

where

$$X_{mn}(-\infty) = X_m(\infty) = \frac{dX_{mn}}{dx}(-\infty) = \frac{dX_{mn}}{dx}(\infty) = 0. \tag{15b}$$

This equation is in the form of a standard second-order linear differential equation with regular boundary conditions. Making the changes of variables

$$W_{mn}(x) = X_{mn}(x) \exp\left[\int_0^x F(\phi)\, d\phi\right], \tag{16a}$$

$$F(x) = \frac{k_2 x}{2}, \tag{16b}$$

$$\zeta = a(x + \gamma), \tag{17a}$$

$$a = \sqrt{\frac{k_2}{2}}, \tag{17b}$$

and

$$\gamma = \frac{2imk_1}{k_2^2} \tag{17c}$$

will result [12] in an equation

$$\frac{d^2 W_{mn}(\zeta)}{d\zeta^2} + (\lambda_n - \zeta_m^2)\, W_{mn}(\zeta) = 0, \tag{18}$$

where

$$\lim_{|\zeta|\to\infty} W_{mn}(\zeta) = \lim_{|\zeta|\to\infty} \frac{dW_{mn}(\zeta)}{d\zeta} = 0, \tag{19a}$$

and where

$$\lambda_n = \frac{1}{2k_2}\left[2k_2 - 4\lambda_{mn} - \frac{4m^2k_1^2}{k_2^2}\right]. \tag{19b}$$

Equation (18) is a standard form. Its solution can be written as

$$W_{mn}(\zeta_m) = N_n\, e^{-\zeta_m^2/2}\, H_n(\zeta_m), \tag{20}$$

where $H_n(\zeta_m)$ is the Hermite polynomial of nth order with the argument

$$\zeta_m = \sqrt{\frac{k_2}{2}}\left[x + \frac{2ik_1 m}{k_2^2}\right]. \tag{21}$$

Because (20) is a bounded solution of (18), the requirement on λ_n can be found to be $\lambda_n = 2n + 1$, $n = 0, 1, 2, \ldots$. Thus (19b) can be simplified to yield

$$\lambda_{mn} = -\left[\frac{k_1}{k_2}\right]^2 m^2 - nk_2. \tag{22}$$

Expressing the solution of (20) in terms of $X_{mn}(x)$ by noting the changes of variables of (16) and (17), we obtain

$$X_{mn}(x) = N_n\, e^{-k_2x^2/4}\, e^{-\zeta_m^2/2}\, H_n(x). \tag{23}$$

We now require the functions $X_{mn}(x)$ to be orthonormal. Then the scalar product $(X_{mn}, \bar{X}_{kl})$ is

$$(X_{mn}, \bar{X}_{kl}) = \int_{-\infty}^{\infty} X_{mn}(x)\bar{X}_{kl}(x)\, w(x)\, dx = \delta_{mk}\delta_{nl}, \tag{24}$$

UNCLASSIFIED

where $w(x) = e^{k_2 x^2/2}$ is a weighting function, $\overline{X}_{kl}$ denotes the complex conjugate of X_{kl}, and δ_{mk} and δ_{nl} are Kronecker delta functions ($\delta_{pq} = 1$ if $p = q$, and $\delta_{pq} = 0$ if $p \neq q$). By use of an identity for the weighted orthogonality of the Hermite polynomials [14]

$$\int_{-\infty}^{\infty} e^{-x^2} H_n(x) H_m(x)\, dx = \begin{cases} 0, & \text{if } m \neq n, \\ 2^n n! \pi, & \text{if } m = n, \end{cases} \tag{25}$$

the coefficient N_n in (23) can be determined as

$$N_n = \frac{1}{\sqrt{\sqrt{\frac{2\pi}{k_2}}\, 2^n n!}}. \tag{26}$$

To compute the unknown coefficients C_{mn} from (10), we write the solution as

$$p(\phi, x, \tau) = \sum_m \sum_n C_{mn}\, e^{\lambda_{mn}\tau} V_{mn}(\phi, x). \tag{27}$$

Thus, by setting $\tau = 0$ in (27) and using the orthonormal properties of $V_{mn}(\phi, x)$, we can determine C_{mn} from

$$\begin{aligned} C_{mn} &= \int_{-\pi}^{\pi} \int_{-\infty}^{\infty} p(\phi, x, 0)\, \overline{V}_{mn}(\phi, x)\, w(x)\, dx d\phi \\ &= \frac{N_n}{\sqrt{2\pi k_2 \sigma}} \left[\frac{2ik_1 m}{\sqrt{2\sigma^2 k_2^2}} \right]^n e^{(k_1 m/2k_2^3)^2}. \end{aligned} \tag{28}$$

Substituting C_{mn} into (27) and integrating over x from $-\infty$ to ∞, we get

$$p(\phi, t) = \frac{1}{2\pi} + \frac{1}{\pi} \sum_{m=1}^{\infty} \cos m\phi\, e^{-Dm^2\left(t + \frac{e^{-\beta t} - 1}{\beta}\right)}. \tag{29}$$

This is the desired analytical solution. It is the transition p.d.f. of the first-order PLL in the presence of exponentially correlated noise with zero signal input and zero initial detuning. This solution is a convergent series and clearly satisfies the modulo-2π boundary conditions (4). To see that it satisfies the initial condition of the PLL in lock, let $t_0 = 0$, $\phi(t_0) = 0$. Then, without loss of generality,

$$\lim_{t \to 0} p(\phi, t) = \frac{1}{2\pi} + \frac{1}{\pi} \sum_{m=1}^{\infty} \cos m\phi = \delta(\phi). \tag{30}$$

We would expect the solution of (29) to approach the solution for the case of WGN input as $\beta \to \infty$, because $x(t)$, the exponentially correlated process given in (1), will approach a WGN process when $\beta \to \infty$. To show this, we see that $x(t)$ is a normal process with zero mean and variance σ_1^2 (and thus is a result from a linear operation on a WGN process with zero mean and variance σ^2). The autocorrelation function of $x(t)$ can be shown [13] to be

$$R_{xx}(t - t_0) = \frac{N_0}{2} \frac{\beta}{2} e^{-\beta|t - t_0|}. \tag{31}$$

From the theory of delta functions, $R_{xx}(t - t_0)$ can be shown to be a delta function in the limit as $\beta \to \infty$ by treating it as a symbolic function [15]. However, for practical purposes $R_{xx}(t - t_0)$ is a delta function in the limit if we can show

$$\lim_{\substack{\beta \to \infty \\ |t - t_0| \to 0,}} \frac{\beta}{2} e^{-\beta|t - t_0|} = \infty \tag{32}$$

and

$$\lim_{\beta \to \infty} \int_{-\infty}^{\infty} \frac{\beta}{2} e^{-\beta|\tau|}\, d\tau = 1, \quad \tau = t - t_0. \tag{33}$$

Because $R_{xx}(t - t_0)$ satisfies (32) and (33), we conclude

$$\lim_{\beta \to \infty} R_{xx}(t - t_0) = \frac{N_0}{2} \delta(t - t_0). \tag{34}$$

Since $x(t)$ is a Gaussian process, its statistics are completely specified by its mean and autocorrelation function. Returning to (29) and taking the limit as $\beta \to \infty$, we can show

$$\lim_{\beta \to \infty} p(\phi, t) = \frac{1}{2\pi} + \frac{1}{\pi} \sum_{m=1}^{\infty} \cos m\phi e^{-Dm^2 t}, \tag{35}$$

which is the solution for the first-order PLL in the presence of WGN when the input signal and the initial detuning are zero. This result is consistent with those obtained previously by La Frieda and Lindsey [9].

An important advantage of our analytic approach to solutions of the Fokker-Planck equation is that the analytical result of (29) gives the explicit relationship between β (the noise bandwidth) and $\phi(t)$ (the time-dependent phase error process). To see the precise meaning of β, consider $x(t)$ as the output of an RC filter whose input is a WGN process with zero mean and two-sided spectral density $N_0/2$ W/Hz. Thus the filter input spectral density is $S_n(f) = N_0/2$ W/Hz. The spectral density of the RC filter output will be

$$S_x(f) = \frac{\frac{N_0}{2}}{1 + \left(\frac{f}{f_0}\right)^2}, \tag{36}$$

where $f_0 = 1/2\pi$ RC is the frequency at which the response of the RC filter is 3 dB below its peak. The autocorrelation function of $x(t)$ can be determined from

$$\begin{aligned} R_{xx}(\tau) &= \int_{-\infty}^{\infty} e^{-i\omega\tau} S_x(\omega)\, d\omega \\ &= \frac{N_0}{4} \omega_0 e^{-\omega_0|\tau|}, \end{aligned} \tag{37}$$

where $\tau = t - t_0$ and $\omega_0 = 1/\text{RC}$. Relating (37) to (31), we see that $\beta = \omega_0$. Thus β can be considered as the -3-dB radian-frequency bandwidth of an RC low-pass filter.

The transition cumulative distribution function is obtained easily from $p(\phi, t)$, where

$$\begin{aligned} \text{prob}\,(|\phi| \leqslant \phi_l) &= \int_{-\phi_l}^{\phi_l} p(\phi, t)\, d\phi \\ &= \frac{\phi_l}{2\pi} + \frac{2}{\pi} \sum_{m=1}^{\infty} \frac{\sin m\phi_l}{m} e^{-Dm^2\left(t + \frac{e^{-\beta t} - 1}{\beta}\right)}. \end{aligned} \tag{38}$$

The time-dependent variance of the phase error is often of interest. This can be obtained simply from

$$\begin{aligned} \text{var}\,[\phi(t)] &= \int_{-\pi}^{\pi} \phi^2 p(\phi, t)\, d\phi \\ &= \frac{\pi^2}{3} + 4 \sum_{m=1}^{\infty} \frac{\cos m\pi}{m^2} e^{-Dm^2\left(t + \frac{e^{-\beta t} - 1}{\beta}\right)}. \end{aligned} \tag{39}$$

UNCLASSIFIED

NUMERICAL RESULTS

Equation (29) was used to compute values for the transition p.d.f.s of the first-order PLL in the presence of exponentially correlated noise, this equation being for the case of zero signal input ($\epsilon = 0$) and zero initial detuning ($\Omega_0 = 0$). Figure 2 shows the transition p.d.f. for $\beta = \infty$, which reduces to the solution of the first-order PLL in the presence of WGN, and these results agree with those obtained by La Frieda and Lindsey [9]. Figure 3 is a plot of the transition p.d.f. when $\beta = 100$. In both Fig. 2 and Fig. 3 the dispersion of the p.d.f. increases with increased Dt (D being called the diffusion constant). At $Dt = 2.5$ the p.d.f.s have almost reached the steady-state distribution value, which is a uniform distribution between $-\pi$ and π. Figure 4 shows loop's phase decay at a fixed time ($Dt = 0.125$) for different values of correlated noise bandwidth β. As expected, phase-error dispersion grows with increased β.

The transition cumulative distribution function was also computed, for $\beta = 100$ (Fig. 5). For small values of Dt, the distribution of $\phi(t)$ concentrates about $\phi = 0$, and it is conjectured that the modulo-2π phase-error statistics are a good approximation to the loop loss-of-lock statistics, because for Dt sufficiently small the phase error $\phi(t)$ has not had a chance to skip cycles and thus no buildup of phase-error probabilities has occurred at $\phi = \pm 2k\pi$, $k = 1, 2, 3, \ldots$.

The time-dependent variance of the phase error was computed (Fig. 6). Figure 6 shows that a higher phase-error variance is associated with a larger noise bandwidth β, as expected.

SUMMARY AND DISCUSSION

We have shown a method for obtaining an analytical solution to the Fokker-Planck equation corresponding to the first-order phase-locked loop (PLL) in the presence of exponentially correlated noise for the case of zero signal-to-noise ratio, zero initial detuning, and phase error process reduced modulo 2π. The solution is the transition probability density function (p.d.f.) of phase error and is represented by a convergent series showing the explicit dependence on the noise bandwidth β and the diffusion constant D.

Computed values of transition p.d.f.s, transition cumulative distribution functions, and the time-dependent variance of the phase error are shown in Figs. 2 through 6. These computed values indicate the following:

- For $Dt \geqslant 2.5$ the transition p.d.f. essentially reaches the steady-state value, which is a uniform distribution between $-\pi$ and π.

- At $Dt = 0.25$, with $\beta \geqslant 100$, the transition p.d.f. for the exponentially correlated noise can be approximated by the p.d.f. for the Gaussian noise case (represented by $\beta \geqslant 10^5$). We now have a means for assessing the validity of using the Gaussian noise approximation for the RC band-limited noise in the PLL system.

ACKNOWLEDGMENTS

The author is appreciative to Paul Crepeau for his helpful comments, which improved the presentation of this report. Thanks are extended to Dana Patterson and Jan Latimer for their skillful typing of the manuscript.

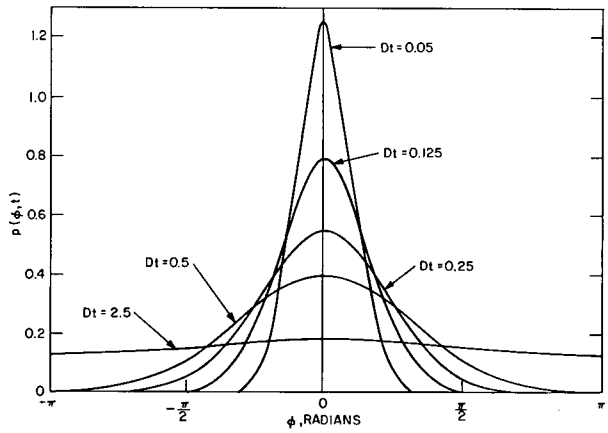

Fig. 2 — Transition probability density functions for the first-order PLL in the presence of exponentially correlated noise with $\epsilon = 0$, $\beta = \infty$, and $\Omega_0 = 0$

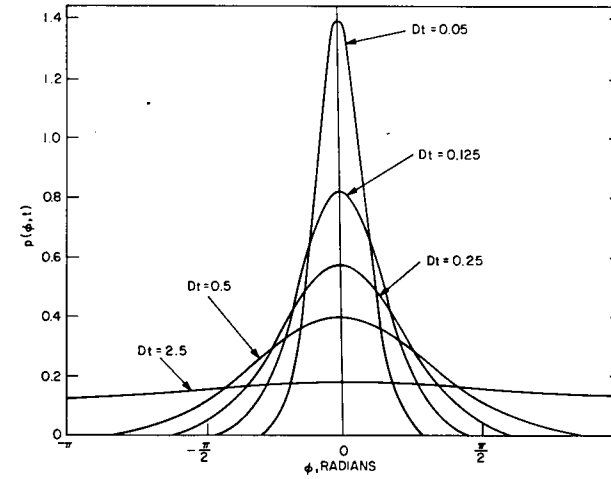

Fig. 3 — Transition p.d.f.s for the first-order PLL in the presence of exponentially correlated noise with $\epsilon = 0$, $\beta = 100$, and $\Omega_0 = 0$

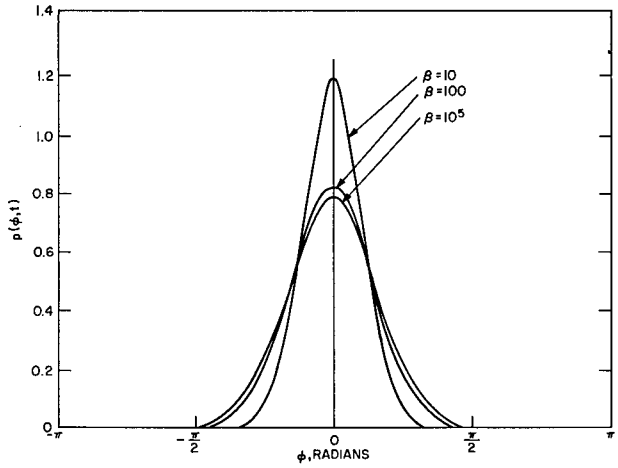

Fig. 4 — Transition p.d.f.s for the first-order PLL in the presence of exponentially correlated noise for various values of β with $\epsilon = 0$, $Dt = 0.25$, and $\Omega_0 = 0$

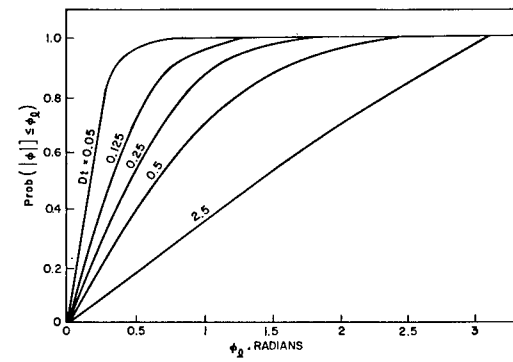

Fig. 5 — Transition cumulative distribution functions for the first-order PLL in the presence of exponentially correlated noise with $\epsilon = 0$, $\beta = 100$, and $\Omega_0 = 0$

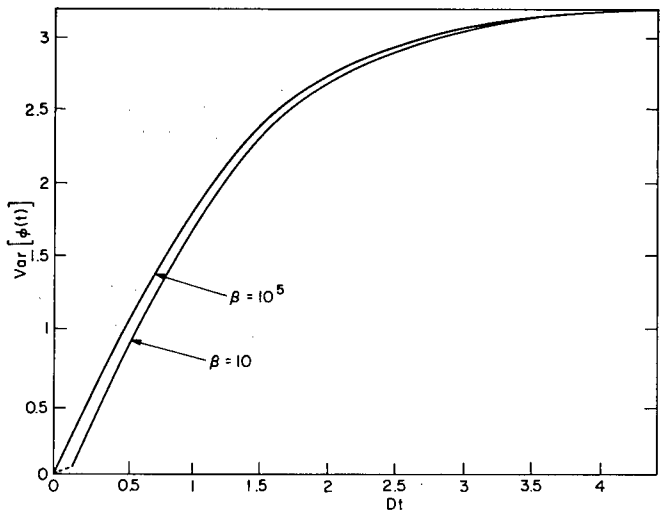

Fig. 6 — Time-dependent variance of phase error for the first-order PLL in the presence of exponentially correlated noise with $\epsilon = 0$ and $\Omega_0 = 0$

UNCLASSIFIED

REFERENCES

1. A.J. Viterbi, *Principles of Coherent Communications*, McGraw-Hill, New York, 1966, Ch. 4.

2. J.P. Costas, "Synchronous Communications," Proc. IRE **44**, 1713-1718 (Dec. 1956).

3. W.C. Lindsey and M.K. Simon, "Data-Aided Carrier Tracking Loops," IEEE Trans. Commun. Technol. **COM-19**, 157-168 (Apr. 1971).

4. W.C. Lindsey, "Hybrid Carrier and Modulation Tracking Loops," IEEE Trans. Comm. (concise paper) **COM-20**, 53-55 (Feb. 1972).

5. M.K. Simon, "Nonlinear Analysis of an Absolute Value Type of Early-Late Gate Bit Synchronizer," IEEE Trans. Comm. Technol. **COM-18**, 589-596 (Oct. 1970).

6. W.C. Lindsey, *Synchronization Systems in Communications and Control*, Prentice-Hall, Englewood Cliffs, 1972, Ch. 3.

7. K.E. Dominiak and R.L. Pickholtz, "Transient Behavior of a Phase-Locked Loop in the Presence of Noise," IEEE Trans. Commun. Technol. **COM-18**, 452-458 (Aug. 1970).

8. J. Von Neuman and R.D. Richtmyer, "On the Numerical Solution of Partial Differential Equations of Parabolic Type," Los Alamos Report LA657, Dec. 25, 1942; reprinted in *John Von Neumann, Collected Works*, Vol. 5, A.H. Taub, editor, Macmillan, New York, 1963.

9. J.R. La Frieda, and W.C. Lindsey, "Transient Analysis of Phase-Locked Tracking Systems in the Presence of Noise," IEEE Trans. Inform. Theor. **IT-19**, 155-165 (Mar. 1973).

10. J.E. Ohlson and A. Rutherford, "Transient Statistics of the First order Phase-Locked Loop," IEEE Trans. Commun. **COM-22**, 698-703 (May 1974).

11. E.I. El-Masry, "An Analytical Solution of the Fokker-Planck Equation in the Absence of Noise," Proc. IEEE **70**, 519-521 (May 1982).

12. H.N. Ho, "Transient Analysis of Phase-Locked Loops in the Presence of Noise," D.Sc. dissertation, George Washington Univ., Feb. 1975 (obtainable from Univ. Microfilms, Ann Arbor, Mich.).

13. A.H. Jazwinski, *Stochastic Processes and Filtering Theory*, Academic Press, New York, 1970, p. 123.

14. I.S. Gradshteyn and I.M. Ryzhik, *Tables of Integrals, Series, and Products*, translated from Russian by Scripta Technica, Inc., Academic Press, New York, 1965.

15. I. Stakgold, *Boundary Value Problems of Mathematical Physics*, Vol. 1, McMillan, New York, 1967.