UNCLASSIFIED

NRL Report 8631

Procedures for Conducting Shock Tests on Navy Class HI (High Impact) Shock Machines for Lightweight and Mediumweight Equipments

E. W. CLEMENTS

Structural Integrity Branch
Marine Technology Division

September 30, 1982

NAVAL RESEARCH LABORATORY
Washington, D.C.

Approved for public release; distribution unlimited.

UNCLASSIFIED

SECURITY CLASSIFICATION OF THIS PAGE (When Data Entered)

REPORT DOCUMENTATION PAGE		READ INSTRUCTIONS BEFORE COMPLETING FORM
1. REPORT NUMBER NRL Report 8631	2. GOVT ACCESSION NO.	3. RECIPIENT'S CATALOG NUMBER
4. TITLE (and Subtitle) PROCEDURES FOR CONDUCTING SHOCK TESTS ON NAVY CLASS HI (HIGH IMPACT) SHOCK MACHINES FOR LIGHTWEIGHT AND MEDIUMWEIGHT EQUIPMENTS		5. TYPE OF REPORT & PERIOD COVERED Interim report Oct. 81 - Sept. 82 6. PERFORMING ORG. REPORT NUMBER
7. AUTHOR(s) E.W. Clements		8. CONTRACT OR GRANT NUMBER(s)
9. PERFORMING ORGANIZATION NAME AND ADDRESS Code 5837, Naval Research Laboratory Washington, DC 20375		10. PROGRAM ELEMENT, PROJECT, TASK AREA & WORK UNIT NUMBERS 63561N; S0971AS; 58-0276-00
11. CONTROLLING OFFICE NAME AND ADDRESS NAVSEASYSCOM Code 3221 Washington, DC 20362		12. REPORT DATE September 30, 1982 13. NUMBER OF PAGES 18
14. MONITORING AGENCY NAME & ADDRESS(if different from Controlling Office)		15. SECURITY CLASS. (of this report) UNCLASSIFIED 15a. DECLASSIFICATION/DOWNGRADING SCHEDULE

16. DISTRIBUTION STATEMENT (of this Report)

Approved for public release; distribution unlimited.

17. DISTRIBUTION STATEMENT (of the abstract entered in Block 20, if different from Report)

18. SUPPLEMENTARY NOTES

19. KEY WORDS (Continue on reverse side if necessary and identify by block number)

Shock
Testing
Reliability

20. ABSTRACT (Continue on reverse side if necessary and identify by block number)

Combat worthiness of Navy shipboard systems and equipment is in large part due to tests conducted on the Navy Class HI (High Impact) Shock Machines for Lightweight and Mediumweight Equipments. These machines are often referred to by the abbreviated names of Lightweight Shock Machine (LWSM) and Mediumweight Shock Machine (MWSM). The validity of tests performed on these machines depends on their being operated properly. The rules and guides for their proper operation, however, are scattered throughout the literature of the field, and some seem not to be documented at all. This report provides a comprehensive assembly of the rules to be followed and the

(Continued)

DD FORM 1 JAN 73 1473 EDITION OF 1 NOV 65 IS OBSOLETE
S/N 0102-014-6601

SECURITY CLASSIFICATION OF THIS PAGE (When Data Entered)

UNCLASSIFIED

20. ABSTRACT (Continued)

guides to be observed to achieve consistent, valid tests of Navy equipment by use of the LWSM and MWSM.

UNCLASSIFIED

CONTENTS

INTRODUCTION 1

BACKGROUND 1

TYPES OF SHOCK TEST 2

LIGHTWEIGHT SHOCK MACHINE 2

- Weight Limit of LWSM 2
- Test Fixture Selection and Mounting the Test Item 2
- Pretest Checks 4
- Periodic Checks 4
  - Welds 4
  - Anvil-Pads 4
  - Lubrication 4
  - Springs 5
  - Fixtures 5
  - Hoists 5
- General Configuration 5
  - Hammer-Height Indication 5
  - Miscellaneous 5

MEDIUMWEIGHT SHOCK MACHINE 5

- Weight Limit of MWSM 5
- Fixture Selection and Mounting the Test Item 6
- Mounting Arrangements 6
  - Vertical Test, Deck-Mounted Items 6
  - Vertical Test, Bulkhead-Mounted Items 8
  - Vertical Test, Bulkhead-Supported Items 9
- Angled Mounting Arrangements 9
  - 90° Inclination Mounting Arrangements 10
  - 30° Inclination Mounting Arrangements 10
- Special Mounting Arrangements 11
- Balancing 12
- Operation of MWSM 13
- Pretest Checks 13
- Periodic Checks 14
- Maintenance 14
- Personnel Protection 14

CONCLUSION 15

ACKNOWLEDGMENTS 15

REFERENCES 15

UNCLASSIFIED

PROCEDURES FOR CONDUCTING SHOCK TESTS ON NAVY CLASS HI (HIGH IMPACT) SHOCK MACHINES FOR LIGHTWEIGHT AND MEDIUMWEIGHT EQUIPMENTS

INTRODUCTION

For some 40 years vital equipment items installed aboard Navy ships and submarines have been required to be shock-qualified by tests on the Navy Class HI (High Impact) Shock Machine for Lightweight Equipment (LWSM) and, for almost as long, by tests on the companion Shock Machine for Mediumweight Equipment (MWSM). Throughout this time, guides and instructions for the proper operation and maintenance of these machines have accumulated in a number of documents, but they have never been assembled into a single source. In many cases, present users of these machines have been found to be unaware of all of the existing material, but rather they follow procedures which have been handed down as a mystic rite through a system of apprenticeship. The purpose of this report is to provide a single document which gathers together the Navy requirements and general guides to good practice in the operation and maintenance of the LWSM and MWSM.

BACKGROUND

The history and general description of the LWSM and MWSM were given in some detail previously [1], and they need not be repeated here save in condensed form. When large noncontact weapons were introduced early in World War II, it was found that the shock environment induced aboard the target vessel by their detonation underwater caused widespread damage to equipment and installations throughout the ship even though the hull and basic structure of the ship might not be severely damaged. The ship would still float, but could not function. A British research program aimed at this problem resulted in a machine and an operating procedure which produced damage in shipboard equipment items similar in kind and extent to that found as a result of such a large noncontact weapon attack. The approach was highly pragmatic, being based principally on damage statistics; at that time, it was unclear what environmental measurements should be made or how to make them. This machine, with refinements, remains today as the LWSM.

Shortly after the development of the LWSM, which can test items weighing up to about 250 lb (110 kg), a program was initiated to develop a similar but larger machine capable of testing items weighing up to 4,500 lb (2000 kg). Since measurements of the shipboard and LWSM shock environments were now becoming available, these data were used to help the design of the machine and its operating procedure, although the criterion of similarity of equipment-damage statistics remained the ultimate consideration. The machine resulting from this effort was the MWSM, substantially as it exists today. While similar in principal to the LWSM, it is considerably different in structure, due to its much greater size.

The current Navy requirement for shock-qualification of shipboard equipment on the LWSM and MSWM is that the machines shall be built and installed in accordance with Navy blueprints [2,3] and operated in accordance with a Navy specification [4]. The rules for operation and maintenance are scattered, sometimes unobtrusively, throughout these and other documents, and in many instances they are unclear or ambiguous or are touched on lightly or not at all.

Manuscript submitted on July 6, 1982.

TYPES OF SHOCK TEST

Reference 4 defines three permissible types of shock tests. Of these, Type A, a test of a "principal unit," or system, is preferred and is the test usually performed; it is the test discussed in this report. For a Type A test, the entire shipboard equipment or system is tested as a unit using whatever shock-testing machine (LWSM, MWSM, Floating Shock Platform, or Large Floating Shock Platform) is required. Type A tests can be performed on packages up to about 50 × 30 × 25 ft (15 × 9 × 7.5 m) and weighing up to 400,000 lb (180,000 kg). If it is not practical to perform a Type A test, the unit may be broken down into component systems or items, which may be tested separately. If these component items are *not* used widely throughout the ship or on many classes of ships, they may be given a Type B test. This type of test will usually require a special fixture and/or mounting arrangement, and will qualify the component system only for use as a part of a specified principal unit or family of principal units. Type A testing of the principal unit may still be required. If the component item is one which is widely used throughout the ship or fleet, a Type C test may be performed, but Type A testing of the principal units assembled from such components will be required.

LIGHTWEIGHT SHOCK MACHINE

Due to its ad hoc origin, the LWSM has a structure that is modified by use: parts deform, bolts loosen, etc. Some aspects of operation tend to blend with those of maintenance, so that it is more profitable to discuss things that should be done routinely with every test and things that should be done occasionally.

Weight Limit of LWSM

The LWSM was originally rated for testing items weighing up to 400 lb (180 kg). When the MWSM was introduced, the weight limit of the LWSM was reduced to 250 lb (110 kg), although items up to 400 lb could still be tested on it with Navy approval. This was again modified by the appendix of Ref. 4 in a way which is sometimes misread. The intent and interpretation of the present weight limit is that the total weight attached to the anvil plate (Part 1 of Fig. 1) shall not exceed 550 lb (250 kg). This includes the test item, fixture, channels, and nuts and bolts. This effectively limits the weight of the test item to 250 to 350 lb (110 to 160 kg).

The appendix incorporating this and other changes is marked specifically for tests of submarine equipment items. It has since been extended to apply to tests of all items.

Test Fixture Selection and Mounting the Test Item

The appropriate test fixture should be chosen from Figs. 5 through 8 of Ref. 4 unless the specification for the item to be tested identifies a special fixture (as for molded-case AQB circuit breakers, for example). The general rule is that bulkhead-mounted items must be mounted on the 4-A plate and deck-mounted items must be mounted on one of the 4-C shelf plates. Ideally, the item should be placed on the fixture so that its center of gravity lies on the axis of percussion; in general, this is possible only for items mounted on the 4-A plate, and then only for Back blows. When the 4-A plate is used, the item must be mounted on spacers, as indicated in Fig. 5 of Ref. 4, to prevent the rigidity of the item from blocking out the flexibility of the 4-A plate. If one of the 4-C shelf plates is used, spacers are not mandatory but may be helpful, since these fixtures tend to bow with use. Note that there are three sizes of 4-C shelf plates; the smallest that can comfortably accommodate the item should be used. If the item is furnished with special mounting-hardware, it should be used. Otherwise, high-strength (Class 5 or better) bolts or socket-head cap screws should be used to fasten the item to the test fixture.

UNCLASSIFIED

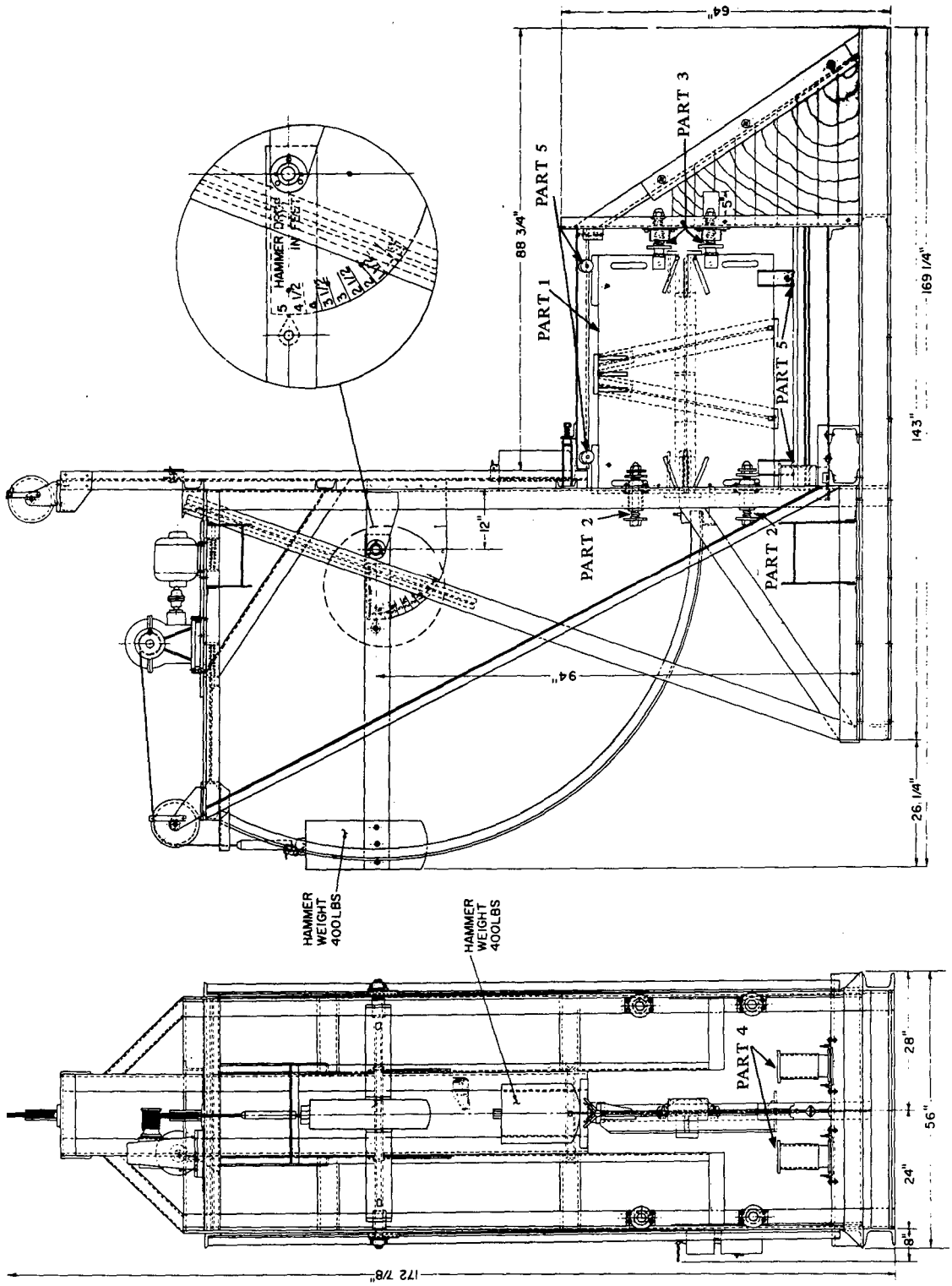

Fig. 1 — The Lightweight Shock Machine (LWSM). Part 1 is the anvil-plate, Parts 2 (4 each) are the forward springs for Back blows, Parts 3 (2 each) the forward springs for Edge blows, Parts 4 (2 each) the forward springs for Top blows, and Parts 5 (6 each) the anvil-plate guide rollers for Edge blows. The LWSM is drawn with the anvil-plate oriented for Edge blows.

Pretest Checks

Before each blow, all fasteners should be checked for tightness. This includes the bolts holding the item to the fixture, the fixture to the anvil-plate, and the anvil-plate to the LWSM frame. The clearance between stops for the forward springs (Parts 2 and 3 of Fig. 1) should be checked at 1.5 in. (3.8 cm) for Back and Edge blows. The clearance of the forward springs for Top blows (Part 4 of Fig. 1) is not controllable, and it should not change during the course of a test unless a spring is damaged. With the static load of anvil-plate and fixture, but without the test item, this clearance should be about 1.5 in.

Before each blow, the hammer not in use should be checked to verify that it is secured, so that it is not in contact with its anvil-pad and will not make contact during the course of the blow.

The LWSM is a very noisy machine in operation (~160 dBA), and OSHA and NOSHIP regulations require that personnel in the vicinity be provided with adequate hearing protection. This requires ear defenders at a minimum and preferably earplugs as well. It is also a wise precaution to station personnel as much as possible behind the plane of the anvil-plate before the hammer is released, since pieces of the item, or even of the LWSM, may occasionally come off and travel with quite respectable energy.

Finally, the various rollers which guide the anvil-plate for Edge blows (Parts 5 of Fig. 1) should be checked to ensure that they turn freely. This can be done conveniently when the anvil-plate is being reoriented for Edge blows or when it is oriented for Back and Top blows.

Periodic Checks

Welds

All welds in the anvil-plate structure should be inspected fairly frequently, as they can be expected to crack. Those in the vicinity of the anvil-pads and bottom guide rollers are particularly susceptible. When a crack is detected visually, it must be repaired promptly by chipping out and rewelding. Since the anvil-pads themselves must be replaced periodically (see below), a time eventually comes when it is more cost-effective to replace the entire anvil-plate structure with a new one. It should require many years of heavy use to reach this point, however.

Anvil-Pads

The anvil-pads, in spite of their impressively rugged proportions, deform with use. This deformation increases the effective contact area between hammer and anvil-pad, decreasing the loading time and leading to higher anvil-plate accelerations. As a rule of thumb, a straightedge may be laid along the anvil-pad, and if the gap between the center of the anvil-pad and the straightedge is more than 0.5 in. (1 cm) or so, the anvil-pad (and probably some of its supporting structure) should be removed and replaced.

Lubrication

The pivot bearings of the swinging hammer should be greased periodically, and they are fitted with grease nipples for this purpose. The hammer can be checked occasionally for free motion by dropping it from a modest height (say 1 ft [0.3 m]) when the anvil-plate has been removed from the frame of the LWSM. The vertical hammer usually has sufficient clearance on its guides (0.0625 to 0.125 in. [0.16 to 0.32 cm]) so that lubrication is probably not very effective, but a light film of grease on the guides does no harm.

UNCLASSIFIED

Springs

The various forward and rebound springs should be inspected occasionally for possible deformation or breakage. This is easily done for the Back and Edge springs. Since the Top springs are enclosed, the easiest way to check them is when the anvil-plate is oriented for Back and Top blows. With the weight of the bare anvil-plate supported by the Top springs, their total height should be about 10 in. (25 cm). Next, lower the vertical hammer until it rests on the top anvil-pad. The height of the Top springs should shorten by 0.3 to 0.5 in. (0.8 to 1.3 cm). If a discrepancy is observed, the Top-spring assemblies should be disassembled and inspected.

Fixtures

The test fixtures (particularly the 4-A plate) will also deform with use, and they should be inspected occasionally to verify that they are not excessively bowed. As they also accumulate holes with use, they will ordinarily be discarded because the holes have become too numerous rather than because of deformation.

Hoists

The handling hoists and hammer hoists should receive the routine maintenance, inspection, and safety checks prescribed by the Navy for lifting equipment.

General Configuration

Hammer-Height Indication

Each hammer should be fitted with a scale-and-pointer arrangement to give an unambiguous indication of the vertical height between the hammer's impacting surface and that of the anvil-pad. Major divisions should be marked at 1-ft (30-cm) increments and should be conspicuous and of high contrast. Intermediate marks at 0.25-ft (7.5-cm) increments are also helpful.

Miscellaneous

Other features are essential in function, but may vary in configuration. Hammers must be attached to the lifting mechanism via quick-release devices, but these may be manually or electrically operated. The lifting mechanism itself may employ a separate hoist for each hammer or a single hoist with a double windlass. Hoist capacity should be at least 0.25 ton (225 kg). The handling hoist should be of at least 0.5-ton (450-kg) capacity, but it may be electrical, pneumatic, or even a manual chain-fall.

MEDIUMWEIGHT SHOCK MACHINE

In contrast to the LWSM, the MWSM is almost completely elastic, so that its maintenance is simpler. Since it is also a uniaxial machine, its operation is also basically simpler, but mounting the test items is more difficult.

Weight Limit of MWSM

When first introduced, the MWSM was prescribed for testing items in the weight range of 250 to 4,500 lb (110 to 2000 kg). Currently, the lower limit has been removed and the upper replaced by a restriction that the total weight attached to the anvil table (test item, channels, base-rails, fixtures, nuts, bolts, etc.) shall not exceed 7,400 lb (3350 kg). This effectively imposes an upper weight limit of around 5,000 to 6,000 lb (2250 to 2700 kg) on the test item.

Fixture Selection and Mounting the Test Item

The MWSM is inherently a uniaxial machine, in that it produces shock motion directed vertically. Adapting this uniaxial machine to test along all three axes of the test item is the source of most of the problems encountered in its use. The term *fixture* applied to the MWSM has a connotation different from the same term applied to the LWSM. With the LWSM, *fixture* may generally be understood to signify one of the standard parts of Figs. 5 through 8 of Ref. 4—the 4-A plate, 4-C shelf plates, etc. For the MWSM, Ref. 4 prescribes a standard mounting arrangement of base rails and channels which represents a deck. Some intervening structure may be needed to adapt the test items to this deck surface, and this intervening structure is usually what is meant by *fixture*; it has a configuration tailored to the needs of the individual test item rather than being a general-purpose part of the MWSM.

Mounting Arrangements

The original test specifications governing the use of the MWSM required the test item to be attached to a specified mounting arrangement as normally installed aboard ship. Its normally vertical axis was thus vertical, and shock motion was directed along the vertical axis only. Later specifications required modifications of the original mounting arrangement to have shock motion directed along one or both of the orthogonal horizontal axes of the test item as well. These modifications achieve this by rotating the test item about one or both horizontal axes, so that its normally vertical axis is inclined from the vertical direction in one or two orthogonal vertical planes. The original mounting arrangement remains as that for Vertical Tests.

Vertical Test, Deck-Mounted Items

Assembly of this, the original mounting arrangement, starts with the bolting of a pair of base rails to the surface of the anvil-table. These base rails may be made up from sections of ship channel or from fabricated channel made up from plate. The fabricated channel version is preferable, since the structure is somewhat more robust, hence it is more rigid. It is also a little heavier, however. The base rails are bolted down solidly to the anvil-table along opposite edges—no material may intervene except the minimum necessary shim stock. If base rails and/or anvil-table surfaces are sufficiently deformed to require substantial shimming, they should be replaced. Whether the base rails are laid down along the edges of the anvil-table parallel to or normal to the hammer axis is not material to the test environment, and the direction is generally controlled by considerations of the size, geometry, and configuration of the test item.

Next, mounting channels to span the space between the base rails are selected from Table X of Fig. 9-1 in Ref. 4. This table is entered by the weight of the test item and by Dimension "A." Dimension "A" is the center-to-center separation between the most extreme mounting-bolt holes of the test item along the length of the mounting channels, which should be the shorter of the horizontal mounting dimensions of the item. Note that the maximum permissible value of Dimension "A" is 44 in. (110 cm) for the following reason. The purpose of the mounting channel arrangement is to provide a flexible element between the test item and the anvil-table. If Dimension "A" exceeds 44 in., the loading points will be adjacent to the base rails, hence (nearly) rigidly connected to the anvil-table, and little flexibility will be provided. If the item is of such a size that the value of 44 in. is exceeded, it must be mounted on a fixture such that the pattern of mounting holes of the item can be used, while the fixture itself provides a pattern of mounting holes satisfying the requirements on Dimension "A." The fixture then functions as an interface satisfying the mounting requirements of the test item on one side and the MWSM on the other. Examples might be simply a plate of sufficient thickness (if weight is not a limiting factor) or a section of channel, as shown in Fig. 9-1 of Ref. 4. Note in addition that there is also a minimum permissible value for Dimension "A" which depends on the weight of the test item. This indicates the situation where the loading pattern is sufficiently concentrated to cause unacceptably high dynamic bending moments to be imposed on the mounting channels.

UNCLASSIFIED

Entering Table X by the weight and by the Dimension "A" of the test item or of the combination of test item and fixture, we read out the requisite number of car-building mounting channels. Mounting channels must be used in back-to-back pairs, as indicated in Fig. 9-1 of Ref. 4. Odd numbers of channels may be made up by use of standard channels under the rule that a pair of standard channels is equivalent to a single car-building channel. Mixed pairs (a standard channel mated to a car-building channel) should be used as necessary to arrive at a symmetrical mounting-channel arrangement. For example, if three car-building channels are called for, a mixed pair should be used at each end of the item rather than a pair of car-building channels at one end and a pair of standard channels at the other. When mixed pairs are used in this way, they should be placed so that the car-building member of the pair is toward the outboard direction of the test item. The pairs of mounting channels are then laid across the space between the base rails, and the test item with fixture (if any) is laid upon them. Since Dimension "A" is to be taken from the shorter horizontal dimension of the item, it will be arranged so that its longer horizontal axis is parallel to the base rails. When the test item is attached directly to the mounting channels, all of its mounting holes should be utilized. The number and the size of the mounting bolts will then be dictated by the number and the size of the item's mounting holes; high-strength bolts or socket-head cap screws should be used unless the item is provided with special hardware. A spacer should be installed between the item and the channel at each bolt location to prevent the item's own stiffness from short circuiting the flexibility of the channels, unless the structure of the item itself provides an individual load pad at each bolt location. Generally, a steel plate 6 × 2 × 0.5 in. (15 × 5 × 1.3 cm), drilled through with a clearance hole for the mounting bolt and laid with its long dimension across the channel pair, provides an adequate spacer. The necessity of using all of the item's mounting holes may also influence the channel arrangement—it may be necessary to use all standard or mixed pairs in order to have enough total pairs to utilize all mounting holes without exceeding the required number of car-building (equivalent) channels. If a fixture is used, the test item should be fastened to it directly, again using all mounting holes. The fixture should then be fastened to the mounting channels, using spacers, with an adequate number and size of high-strength fasteners. As a rule of thumb for estimating the required number and size of fasteners, multiply the total weight to be attached to the mounting channels by 100 and divide by the static tensile yield stress of the material of the fasteners to give a minimum total fastener cross section. This is tantamount to providing for a static acceleration of 100 *g*, which usually provides a safety factor of about two. The use of a transition fixture and spacers is illustrated Fig. 2. Finally, the entire assembly should be balanced and all bolts and clamps tightened.

Vertical Test, Bulkhead-Mounted Items

Bulkhead-mounted items include all those items which are normally mounted to a vertical surface, and the term is sometimes stretched to include those mounted to an overhead surface or to both vertical and overhead surfaces. For items in this category, a fixture must be employed to provide appropriate mounting surfaces. Often, a simple (but rigid) frame structure will suffice—small sections of plate are bolted to the frame as needed for the test item's mounting points. The fixture (with the test item) is then attached to the mounting channels as discussed above. The need for rigidity may be a serious problem, however. The general requirement for a fixture is that it shall not modify the shock environment. This means that the shock motion of the fixture at the test item's mounting points should be substantially the same as that where the fixture attaches to the mounting channels, which in turn means that the lowest principal resonance of the loaded fixture should be around ten times the basic frequency of the test package on the mounting channels. This required value is 650 to 700 Hz, which is often unattainable with any plausible structure and/or material for the fixture. The usual compromise is to make the fixture as rigid as possible without resorting to extremes of complexity or weight, and without using exotic materials.

When bulkhead fixtures are used, for either bulkhead-mounted or bulkhead-supported items (see below), their structure should be kept as shallow as possible consistent with the need for rigidity. The fixture should be attached (with spacers as required) to the mounting channels with its thickness axis parallel to the channels, so that its item-mounting bulkhead surface lies across the channels. The

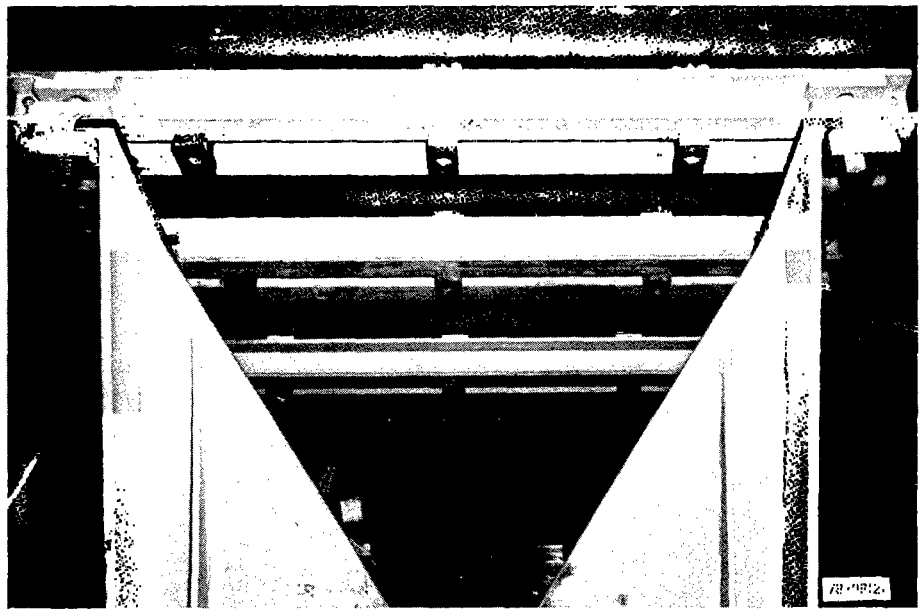

Fig. 2 — Mounting arrangement for the Mediumweight Shock Machine (MWSM). In this arrangement, a large, deck-mounted item has been fastened using its standard shipboard hardware to a steel plate (top) which acts as a transition fixture. The plate has been bolted to three pairs of car-building channels (six total) with a spacer pad at each of the nine bolt locations. The ends of the spacer pads may be seen between the plate and the tops of the channels. The arrangement shown is one for a 30°-inclination test, utilizing the 30° base rails.

front-to-back axis of the test item will thus be parallel to the length of the mounting channels. A typical fixture for testing bulkhead-mounted and bulkhead-supported items is shown in Fig. 3.

Vertical Test, Bulkhead-Supported Items

Many items are mounted so that their principal support is from the deck, but with secondary support from a vertical or overhead surface via sway-brace, flex-plate, or similar mount. Mounting these items on the MWSM requires a scheme forming a hybrid of the two discussed above. First, the mounting channels are chosen from Table X on the basis of the weight and Dimension "A" of the deck-mounting geometry of the test item, just as if it were a purely deck-mounted item. If an entry to Table X comes close to a break-point in the number of channels required, however, it is well to use the higher number if they will also support the bulkhead fixture. The bulkhead fixture will be a structure similar to that described above, fitted with a plate to accommodate the secondary mounting points of the item. This fixture will normally be located close to one of the base rails, possibly overhanging it, so that some of its hold-down bolts will be adjacent to the base rail. Like the test item, the bulkhead fixture should be attached to the mounting channels with spacers, unless its mounting points have separate feet. In many cases the item will have a more compact mounting geometry than the bulkhead fixture—rather than build a special fixture for each item, it is reasonable to build a large fixture, say 4 to 4.5 ft (1.2 to 1.4 m) wide, and use it for all items, so that the situation may arise where an item 2 ft (0.6 m) wide is fastened to a fixture 4.5 ft wide. In such cases the fixture should be attached to an independent set of mounting channels: two or three pairs of standard weight. While this procedure means that the shock motion at the bulkhead support points will differ from that at the deck mounting points, this is acceptable in this case, since the bulkhead supports constitute a secondary, and usually minor, loading path to the item.

The requirement for as shallow a fixture as possible (see above, Vertical Test, Bulkhead-Mounted Items) is even more important for this category of items, as most of the mounting-channel span is needed for the item's base attachment. Mercifully, the requirement for rigidity is less stringent for this category, so that a shallow fixture can be achieved.

UNCLASSIFIED

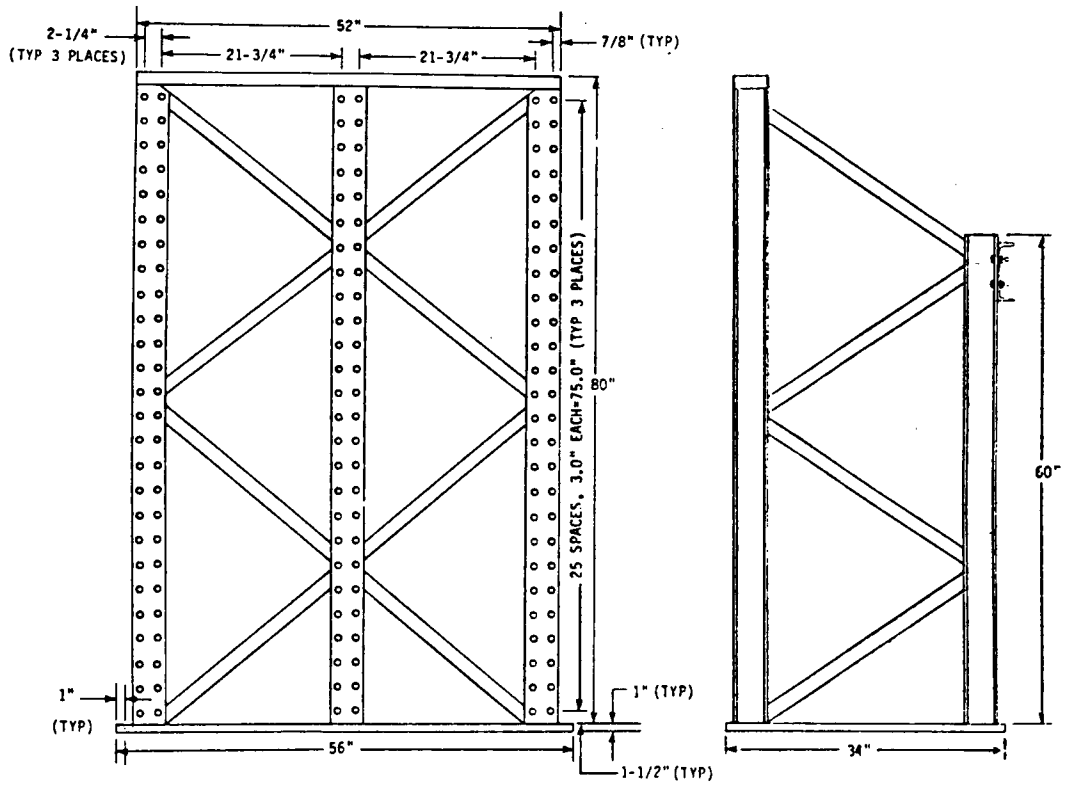

Fig. 3 — Fixture for bulkhead-mounted and bulkhead-supported items. This fixture is built with main members of 4-in. (10-cm) H-beam buttressed with 4-in. channel sections. The vertical mounting surface, 80 in. (2 m) high by 56 in. (1.4 m) wide, is provided with many holes for attaching sections of plate to pick up the item's bulkhead-attachment points.

Angled Mounting Arrangements

The current Navy specification for shock testing is Ref. 4, MIL-S-901C with appendix. Earlier specifications required that items should be tested on the MWSM mounted as described above for Vertical Test, receiving two each of Group I, II, and III blows. When MIL-S-901C was issued, it modified the procedure by requiring one blow of each group with the normal (vertical) mounting, and one with a new 30°-inclined mounting. The intent was to introduce some shock loading along the item's athwartship axis. This was accomplished by rotating the item's vertical axis 30° away from the vertical about the fore-and-aft axis by replacing the base rails with the 30° base rails (Fig. 10-1 of Ref. 4). If either of the item's horizontal axes might be disposed athwartship aboard ship, it was to be tested with both horizontal axes inclined, for a total of nine blows. Alternatively, if the item were of a type appropriate for it, the Corner Bracket of Fig. 10-2 of Ref. 4 could be used. This fixture inclines both horizontal axes of the item simultaneously, hence it requires a six-blow test series. The appendix again modified the procedure by allowing the item to be rotated 90° rather than 30° so that it lay on the MWSM with its athwartship axis or axes vertical. (Note again that while the appendix is marked as applying to submarine equipment, it has been extended to all equipment.) In this respect, the appendix followed a long tradition for testing reactor components, which had a special test specification.

Of the two allowed inclinations, the 90° is preferable for several reasons. The 30° inclination has the advantage that it introduces shock loading along two or three axes of the item simultaneously. The disadvantages are that the 30° base rails and the Corner Bracket are large and heavy, leaving less of the MWSM's weight capacity available for the test item. This is less of a problem with the 30° fixture of Fig. 10.3 of Ref. 4. Moreover, the test array is more difficult to balance without counterweights. Use of the 30° base rails produces a sideways loading on the mounting channels, which they are poorly equipped to withstand and which gives a tendency for the test item and mounting channels to creep down the base rails as the test progresses. The Corner Bracket is relatively stiff, and it may allow items

on shock mounts an easier ride than they would experience on the more flexible mounting channels. Finally, geometry suggests that the vertical-axis shock severity is cos 30° = 0.87 times the nominal severity, whereas the athwartship axis severity is only sin 30° = 0.5 times. The magnitudes and ratio of these severities may be plausible for surface-ship equipments, but they are not realistic for submarine equipments.

The 90° inclination is not without its problems, principally with regard to free liquid surfaces and dynamic imbalance. These are shared to some extent by the 30° inclination, however. The biggest advantages of the 90° inclination are that full test severity may be produced along each of the horizontal axes and that mounting arrangements and fixtures are generally simpler. The principal disadvantage is that more fixtures are required. The minor disadvantage that shock loadings along the various axes are not simultaneous is outweighed by the advantage of having full nominal severity. Moreover, the 90° inclination fits naturally into the procedure for three-axis testing (where the item is tested with shock loading directed along each of its three principal axes), which should be done as the normal routine.

90° Inclination Mounting Arrangements.

Testing items of all three mounting categories at 90° inclinations utilizes the basic MWSM mounting scheme discussed above for Vertical Test, Deck-Mounted Items—however, all three require fixtures intervening between the test item and the mounting channels. The requirements on the fixtures are similar for all categories: for deck-mounted equipment, a horizontal side to attach to the mounting channels and a vertical foot for attaching the equipment; for bulkhead-mounted equipment, a horizontal side to attach to the mounting channels and to which the item is attached for one axis, and a vertical side for attaching the item for the second axis; and for bulkhead-supported a horizontal side and both a vertical foot and a vertical side. Obviously, a boxlike structure is attractive for all three categories, but problems with access to the interior may preclude this. Often a box with one side missing or with sections which can be unbolted is satisfactory. Note too that the comments above (Vertical Test, Bulkhead-Mounted Items) concerning the requirement for a rigid fixture apply here.

A problem in testing at 90° inclination, especially for deck-mounted items, is the existence of dynamic imbalance. Although the test array is balanced statically, the item constitutes a reactive load cantilevered off its mounting. During the shock motion, its reactive moments try to rotate the fixture and may apply uneven loads on the mounting channels. In practice, the requirement for rigidity leads to robust and fairly heavy fixtures, more so if they are designed to accommodate both axes, so that the effects of dynamic imbalance tend to be overpowered by the inertia of the fixture. At present, data to provide a definitive picture of how the MWSM shock environment is affected, or what the practical limits of item-imbalance moment compared to fixture polar moment may be, do not exist; a test series is planned to provide them. What data are available indicate that in the working situation things are not drastically amiss.

30° Inclination Mounting Arrangements

Three 30° inclination mounting arrangements are allowed by Ref. 4. Which one is utilized is generally a matter of convenience for the particular item being tested. Of the three, the arrangement using the 30° base rails is to be preferred, as it preserves the mounting arrangement used for the Vertical Test. (Although it is not required by Ref. 4, the usual practice is to complete the Vertical Test before the inclined tests. There is generally an advantage in operational convenience to doing this, particularly if the inclined test is at 30°.) For items in any of the three categories, the test array, from the mounting channels up, is removed from the base rails as a unit, the base rails are replaced by the 30° base rails, and the test package is attached to them. This simple procedure is much more easily described than performed. While balance about the axis parallel to the base rails is essentially preserved (although it should be checked), it is destroyed about the other axis, where the 30° base rails have an intrinsic imbalance moment and the item-fixture-channels unit has an opposing moment because of the

UNCLASSIFIED

30° angle. These moments must be balanced off as much as possible by positioning the package on the base rails, keeping added counterweight to a minimum. A preliminary calculation of moments greatly simplifies this procedure by predicting an approximate location of the package on the base rails. For assembly, the anvil-table (with the 30° base rails attached) should be supported on the balancing stands along the axis perpendicular to the base rails. The item-fixture-channel package should be rested on the rails a little towards the high side of the anticipated balance position (the package goes down much more easily than it goes up). The package is then allowed to slide down the rails gradually until balance is achieved; the rails may be blocked temporarily to keep the package from sliding down too far. Final balance must be checked with all slings and lifting gear removed. For large or heavy items, it is advantageous to have a set of lifting slings cut to length so that the package hangs naturally at the 30° inclination.

The above procedure inclines one of the item's horizontal axes—the side-to-side axis for bulkhead-mounted or bulkhead-supported items. If the other axis must also be inclined, it may be necessary to fasten the item and fixture to a plate and bolt the plate down to an appropriate mounting-channel arrangement.

The Corner Bracket is intended principally for bulkhead-mounted and bulkhead-supported items, although it can also be used for deck-mounted items. Bulkhead mounts and supports are fastened to plates bolted to one of the sides of the bracket, and base mounts are fastened to a plate bolted to its floor. The somewhat-limited floor area may restrict the size of items that can be installed. Since the Corner Bracket has a special set of base rails and hold-down clamps, it may not be possible to balance the test array without counterweights. The Corner Bracket's chief advantage is that both horizontal axes are inclined at once. Its chief disadvantage is that it is much stiffer than the mounting channels.

The final 30° inclination mounting arrangement involves the use of a fixture, shown in Fig. 10-3 of Ref. 4, which is intended for deck-mounted items but may also be used for the other categories. This device is clamped to the normal base rails and provides a surface, inclined at 30°, to which the mounting channels may be clamped. It differs functionally from the 30° base rail arrangement in that the mounting channels are rotated 90°—that is, the mounting channels are inclined lengthwise, rather than in width. Thus, if a bulkhead-mounted or bulkhead-supported item-fixture-channel package is moved onto this fixture, the item's front-to-back axis will be inclined. This orientation of the mounting channels eliminates the side loading, which is an objectionable and sometimes troublesome feature of the 30° base rail arrangement, and the mounting may be a trifle lighter. Rebalancing in both axes will usually be necessary, and the relatively light structure of the fixture leads to a more flexible overall mounting. The use of both this device and the 30° base rails provides an opportunity to test with both horizontal axes inclined, without the weight penalty of additional plates usually required for either arrangement alone.

Special Mounting Arrangements

The need sometimes arises for special mounting arrangements. This can be the case for Type B testing in accordance with Ref. 4 or for testing in accordance with an item test specification which is not in accordance with Ref. 4. For example, reactor components may be required to be tested on the MWSM in accordance with a specification that they be mounted in such a way that shock motions measured at the interface of the item and the mounting shall be characterized by a certain dominant frequency, with some tolerance. Typically, the required dominant frequencies will be different for the vertical and 90°-inclined mountings, and they may be substantially different from the frequency, about 65 Hz, found with the channel arrangements prescribed by Table X of Ref. 4. Various tricks are available to meet these requirements. For higher than normal frequencies, the number of channels can be increased, car-building channels can be substituted for standard channels, channels can be doubled up (that is, each pair of channels can have another pair bolted to its top), a plate can be bolted to the channels without spacers, and so forth. For lower frequencies, the options are more limited. The

number of channels cannot be reduced greatly; if too few are used, they will be overstressed and deform plastically. This may be so pronounced that the test array is supercritically damped and no dominant frequency exists. For frequencies much below normal, recourse may be had to a plate supported along two edges by a pair of channels. The channels serve only to hold the plate and give it edge conditions somewhere between built-in and pinned. The plate provides the flexible element, and by virtue of its large working volume it remains more-or-less elastic. Some degree of tuning can be done by moving the channels in and out. In devising such special mounting arrangements, a good guide to the dominant frequency is the static deflection of the test package on the flexible element, corrected for the mass ratio of the test array.

Balancing

An essential step of the test procedure is balancing the test array. The combined center of gravity of the anvil-table and everything attached to it—base rails, mounting channels, fixtures, test item, etc.—must be aligned on the axis of percussion. Failure to maintain this alignment will cause rotation of the test array during the course of the blow, possibly with associated binding of the anvil-table hold-down bolts. The result will be, at best, an improper and uncontrolled shock environment presented to the test item and, possibly, damage to the MWSM. In extreme cases, the anvil-table hold-down bolts may be bent—their replacement is a major (and expensive) operation.

Balancing is most readily accomplished by use of the two balancing stands depicted in Ref. 3. These bear against the slightly curved surfaces of the pads located in the lower surface of the anvil-table at the midpoint of each side. Balancing is performed after the test array has been completely assembled but before the mounting channels and clamps and item hold-down bolts have been tightened. (If a fixture is used between the item and the mounting channels, the item should be firmly fastened to the fixture, and the hold-down bolts fastening the fixture to the mounting channels should be loose.) The anvil-table is raised on the air jacks to its 1.5-in. (3.8-cm) travel position, the balancing stands placed under the pads on opposite sides of the anvil-table, and the jacks retracted so that the test array rests only on the top surfaces of the stands. The array is then balanced in the chosen axis by moving the test item (and fixture, if any) along the mounting channels (if the chosen axis is the one parallel to the base rails) until the array rocks freely on the stands without preference for one side or the other. The item (or fixture) hold-down bolts are then tightened securely and the air jacks are extended to lift the test array off the stands, which are moved to the pads on the other two sides of the anvil-table. With the array again resting on the stands, balancing along the second axis (in this case perpendicular to the base rails) is accomplished by moving the mounting channels, fixture, and test item (which now constitute a fastened package) along the base rails until the array again rocks freely. The mounting-channel end clamps are then tightened securely to complete the assembly of the test array, and the balancing stands are removed. In some cases, particularly when one of the 30°-mounting arrangements (see below) are employed, it may be necessary to add dead-weight loads to the array in order to achieve balance. This should be avoided if possible. If they must be used, they should be bolted to the anvil-table if possible. The least desirable situation is that where they must be attached to the mounting channels or to the fixture. In the latter case, Table X should be checked to ensure that the mounting channels are appropriate to the weight of the test item, fixture, and added weight. In any case, the added weight must be considered in the total weight on the anvil-table for determining the schedule of hammer drop-heights.

Normally, the order in which the two axes are balanced is unimportant. When switching from the vertical to 30° base rails, however, it is convenient to balance about the axis perpendicular to the base rails first, since the balance about the other axis should not be disturbed by this change. It must be checked, nonetheless.

Variations are sometimes encountered. Balancing stands may be found with knife-edges which bear in grooves in the anvil-table. It should be noted that, although it is probably equally effective, this

UNCLASSIFIED

arrangement deviates from that prescribed by Ref. 3. Complete reliance should not be placed on a calculated moment balance; while this provides a useful guide, the consequences of a minor error in arithmetic could be devastating. The balance stands are a required part of the MWSM and should be used.

Balancing is sufficiently important that it should be sought even at the expense of overloading the MWSM. If balance cannot be achieved without adding so much counterweight that the weight limit of the MWSM is exceeded, the tester should do this rather than conduct the test in an unbalanced condition. While any item which raises this circumstance should properly be tested on the Floating Shock Platform, considerations of practicality may persuade the responsible agency to grant a deviance allowing a modest overload on the MWSM

Operation of MWSM

For the LWSM, the hammer drop-heights are always 1, 3, and 5 ft (0.3, 0.9, and 1.5 m), in that order. For the MWSM, they depend on the total weight attached to the anvil-table. This weight is added up (test item, fixtures, mounting channels, base rails, nuts, bolts, clamps, counterweights, etc.) and Table I of Ref. 4 is consulted to give a schedule of drop heights for Group I, II, and III blows. The blows would ordinarily be given in this order. Table I is accessed only through total weight on the anvil-table, and the table divides this quantity into overlapping ranges: the first range is 0 to 1000 lb (0 to 450 kg), the second 1000 to 2000 lb (450 to 900 kg), and so on. If through some miracle the total weight should fall precisely on a break-point value, the drop heights given for the higher weight range should be used. Drop heights are tabulated in 0.25-ft (7.5-cm) increments, and the hammer-height indicator is graduated similarly. After the Group I and Group II blows have been delivered, the air jacks are extended to lift the test array to the 1.5-in. (3.8-cm) travel position. The hammer is again raised to align the mark for the drop height listed in Table I with the pointer. Even though the actual drop height is now 1.5 in. less than that indicated, because the test array has been raised by that amount, no allowance for this is made in setting the hammer height. When the mounting arrangement is changed for an inclined test, the weight will change, but the same procedure is followed. The drop heights appropriate for the new total weight on the anvil-table are read out from Table I and set to the pointer of the hammer-height indicator. For 30° inclination no allowance is made for the reduction in shock severity along the item's vertical axis due to the inclination.

Pretest Checks

Before each blow, all nuts, bolts, and clamps should be checked for tightness. The first blow of the test will normally cause some loosening as the various components seat themselves. Succeeding blows should not induce substantial or continuing loosening. When the 30° base rails are used, the position of the mounting channels should be checked after each blow to ensure that the test package is not crawling down the rails. Some crawl can be tolerated, but the array must be rebalanced if it becomes excessive. As a rule of thumb, an imbalance moment (weight of package times crawl distance) of 1000 in. lb (110 Nm) would be excessive. Crawl should not be a problem if the mounting channels are properly chosen and their end clamps kept tight. Note that the intrinsic imbalance moment of the 30° base rails themselves is only about 5600 in. lb (630 Nm).

Before the test is begun, the anvil-table should be set for 1.5-in. (3.8-cm) travel, the hammer height adjusted to align the zero mark of the hammer-height indicator with the pointer, and the hammer released. It should contact the anvil-table with a clearly audible clang, but the anvil-table should not move. This check verifies that the brake shoes are not dragging, that the hammer axle turns freely, and that the pointer is set properly. Any departure from the desired behavior requires investigation and remedy before the test can proceed.

Periodic Checks

Most of the periodic checks are just occasional inspections. Things that should be included in the inspections are the springs, the hammer and anvil-table impact pads, the anvil-table hold-down bolts (which protrude 3 in. (7.5 cm) below the base plate when the anvil-table is set for 3-in. travel), welds in the anvil-table structure, and the concrete structure which supports the MWSM. Other factors can be checked during use, such as whether the air jacks function properly and whether the hammer swings true or shifts to the side while in motion. The effectiveness of the brakes can be checked by setting the hammer to zero height, putting on the brakes, and releasing the hammer. It should stay in substantially the same position. If it fails to do so, the brakes serve a mostly decorative function.

The mounting channels should be checked for straightness occasionally. If properly selected in accordance with Table X of Ref. 4 they should deform very little or not at all, but the sideways load attendant with use of the 30° base rails may cause a little permanent deformation. When bowing or bending accumulates enough to be objectionable, the channels may be straightened in a hydraulic press.

Maintenance

Relatively little routine maintenance is needed with the MWSM. The hammer axle bearings should be greased occasionally, and they are provided with fittings for this purpose. The bolts and nuts that hold the MWSM together are mostly pinned. An exception may be bolts at the hammer axle. Most MWSMs have a straight hammer, as shown in Ref. 3. The offset type shown in Fig. 2 of Ref. 4 is bolted to the axle structure, allowing the hammer length to be varied. These bolts should also be locked in place, but if they are not they should be checked occasionally. Hoists and cranes used in conjunction with the MWSM or as dedicated accessories to it should receive the normal maintenance and inspection prescribed by the Navy for lifting equipment.

Personnel Protection

The safety precautions required around the MWSM are mostly the obvious ones. The structural requirements are that the pit should be fenced off with a strong railing and floor openings in the work area around the anvil-table must be covered with removable, but securely fastened, steel plates or gratings. The hammer should be furnished with a securing device in addition to the brakes; a heavy steel bar passed through the ring lugs on the hammer and resting on the floor at the edges of the pit on either side of the hammer is satisfactory. Failing this, the hammer could be secured by lowering it vertically to its lowest point, disconnecting it from the hammer hoist, and applying the brakes. This alternative is not attractive, since it requires that someone climb into the pit to retrieve the hammer from the secured condition. The hammer release mechanism should be fitted with a safety device to prevent accidental actuation. The anvil-table should be grounded electrically via a flexible strap to the base plate. The operational safety precaution is that the hammer should be secured at all times except when it is actually being used. No personnel should be allowed on the anvil-table, or even close to it, unless the hammer is secured. Personnel should not be allowed on or near the anvil-table when it is being raised or lowered with the air jacks. Personnel should stay a respectful distance from the MWSM during the blow sequence, from the time when the hammer is released from its secured condition preparatory to raising it until the time when it has been resecured after the blow. If a brief delay in the blow sequence is necessary after the hammer has been raised, the brakes should be applied. If there is an extended delay, or if it is necessary to approach the test array, the hammer should be resecured. Before the hammer is released from the secured condition or the test array raised or lowered with the air jacks, the test array should be checked for loose parts or tools which might be dislodged.

Hearing protection is required as a routine precaution. The MWSM is somewhat deceptive, since the noise it produces lacks the rich high-frequency content which gives the LWSM its earsplitting

UNCLASSIFIED

quality. While the MWSM is subjectively less objectionable, it is a dangerously noisy machine. All personnel in its vicinity should use ear defenders, although earplugs are acceptable for occasional exposure. Other protective measures may be required because of the peculiarities of the individual test items.

CONCLUSION

For 40 years the LWSM and MWSM have been among the principal tools for assuring the combat effectiveness of Navy ships and submarines. Properly maintained and operated, they perform with a degree of consistency and predictability which is surprising in view of their rough-and-ready appearance. The most important factor in operation and maintenance of these machines is careful attention to detail. In some regards they are quite forgiving, in that some conditions may deviate substantially from what they should be without causing problems or invalidating the shock test. In other regards they are very sensitive to small discrepancies. Also, in operating the LWSM and the MWSM quite respectable amounts of energy are being handled. It is easy for things to be broken or people hurt as the result of a small mistake.

As remarked earlier, the LWSM and MWSM are defined by Refs. 2 and 3, respectively. Compliance of a shock test with the requirements of Ref. 4 hinges on compliance of the test machine used with the description given in the appropriate drawing. These drawings are maintained at the Naval Research Laboratory, and copies may be obtained by application to Code 5837, NRL, Washington, DC 20375. Telephoned inquiries may be directed to E. Clements, 202-767-3543, AUTOVON 297-3543.

ACKNOWLEDGMENTS

The information contained in this report has been gathered over a period of many years from contact with many people, far too many to enumerate individually. The author expresses his gratitude to all the practitioners of the mystic art, past and present. A few who must be singled out are the late I. Vigness, who developed the USN version of the LWSM and helped guide the development of the MWSM; R. W. Conrad, who first made a detailed evaluation of their characteristics; and the teams of H. M. Forkois at NRL and R. A. Chalmers at NOSC, who developed many of the tricks of the trade in the course of long careers in conducting shock tests.

Recognition should also be given to the Navy's overseer of shock and shock-related problems, currently the Ship Protection Branch, Code 55X, of the Naval Sea Systems Command, and its preceding codes, whose continuing concern for and support of shock problems and studies have been invaluable.

REFERENCES

1. E.W. Clements, "Shipboard Shock and Navy Devices for Its Simulation," NRL Report 7396, July 14, 1972.

2. BuShips Dwg 10-T-2145-L-13, "Class HI (High Impact) Shock Machine for Lightweight Equipment."

3. BuShips Dwg NO807-655947-6, or No. 807-655947-6, "Class HI (High Impact) Shock Machine for Mediumweight Equipment."

4. MIL-S-901C "Military Specification Shock Tests, H.I. (High Impact); Shipboard Machinery, Equipment and Systems, Requirements for," 15 Jan. 1963, with "Submarine Shock Requirements Appendix," Dec. 1973.