UNCLASSIFIED

NRL Report 8550

Combustion Scaling and Modeling Gas Mixing Data in NRL 5000-Liter Facility with Flow Obstacle

S. R. LUSTIG, D. INDRITZ, J. P. STONE, AND F. W. WILLIAMS

Combustion and Fuels Branch
Chemistry Division

November 18, 1982

NAVAL RESEARCH LABORATORY
Washington, D.C.

Approved for public release; distribution unlimited.

UNCLASSIFIED

SECURITY CLASSIFICATION OF THIS PAGE (When Data Entered)

REPORT DOCUMENTATION PAGE		READ INSTRUCTIONS BEFORE COMPLETING FORM
1. REPORT NUMBER NRL Report 8550	2. GOVT ACCESSION NO.	3. RECIPIENT'S CATALOG NUMBER
4. TITLE (and Subtitle) COMBUSTION SCALING AND MODELING GAS MIXING DATA IN NRL 5000-LITER FACILITY WITH FLOW OBSTACLE		5. TYPE OF REPORT & PERIOD COVERED Final report of one phase of an NRL problem. 6. PERFORMING ORG. REPORT NUMBER
7. AUTHOR(s) S. R. Lustig, D. Indritz, J. P. Stone, and F. W. Williams		8. CONTRACT OR GRANT NUMBER(s)
9. PERFORMING ORGANIZATION NAME AND ADDRESS Naval Research Laboratory Washington, DC 20375		10. PROGRAM ELEMENT, PROJECT, TASK AREA & WORK UNIT NUMBERS 61153N RR0130144 61-0100-0-1
11. CONTROLLING OFFICE NAME AND ADDRESS Office of Naval Research NRL Core Program		12. REPORT DATE November 18, 1982 13. NUMBER OF PAGES 131
14. MONITORING AGENCY NAME & ADDRESS(if different from Controlling Office)		15. SECURITY CLASS. (of this report) UNCLASSIFIED 15a. DECLASSIFICATION/DOWNGRADING SCHEDULE

16. DISTRIBUTION STATEMENT (of this Report)

Approved for public release; distribution unlimited.

17. DISTRIBUTION STATEMENT (of the abstract entered in Block 20, if different from Report)

18. SUPPLEMENTARY NOTES

19. KEY WORDS (Continue on reverse side if necessary and identify by block number)

Fire suppression
Enclosed spaces
Gas mixing
Scale modeling

20. ABSTRACT (Continue on reverse side if necessary and identify by block number)

Gas mixing rates were studied in a 5000-liter cylindrical tank during pressurization from 1 to 2 atmospheres by observation of gas temperatures with 13 thermocouple probes. Tests were performed with different nozzle arrangements. One rectangular obstacle, 46 x 46 x 100 cm (18 x 18 x 39-1/2 in.) was used to impede gas flow and mixing in the chamber. Instantaneous pressurant concentrations were inferred from temperature measurements. Data are reported from three nonfire conditions where dry air was used as both the resident and pressurant gases. Pressurant deviation statistics indicate that adequate mixing is accomplished within one and one half dumping times following pressurization for all configurations studied.

DD FORM 1 JAN 73 1473 EDITION OF 1 NOV 65 IS OBSOLETE
S/N 0102-014-6601

SECURITY CLASSIFICATION OF THIS PAGE (When Data Entered)

UNCLASSIFIED

CONTENTS

INTRODUCTION 1

EXPERIMENT AND PROCEDURE 1

Apparatus 1
Procedure 3

DATA ANALYSIS 5

RESULTS 7

DISCUSSION 8

CONCLUDING REMARKS 12

ACKNOWLEDGMENTS 12

REFERENCES 12

UNCLASSIFIED

COMBUSTION SCALING AND MODELING GAS MIXING DATA IN NRL 5000-LITER FACILITY WITH FLOW OBSTACLE

INTRODUCTION

Carhart and Fielding [1] proposed a fire suppression technique of inerting pressurizable spaces by nitrogen pressurization. This technique is attractive since an atmosphere is created that suppresses fire yet supports life [2]. Other advantages include the inertness of nitrogen to electrical wiring, machines, and air purification devices as well as, in the use of submerged submarines, the relative ease of returning the atmosphere back to normal. There are two requirements for successful utilization of this technique. First, the fire must be suppressed quickly to avoid excessive production of toxic gases and pressure due to combustion and heat production. Second, the addition of nitrogen must occur with sufficient turbulence to provide adequate mixing of the pressurant and resident gases. The feasibility of nitrogen pressurization has been demonstrated in suppression studies of liquid pool fires in 270- and 5000-liter chambers [3-5]. To examine possible stratification of resident and pressurant gases during rapid pressurization, concentration histories of pressurant gas are inferred at specified points in the chamber space. Early studies without combustion and flow restriction to gases have been performed at the NRL 5000-liter facility by Stone et al. [6-11] and in a 1/6-scale (geometric) model at the University of Washington by Professor R. C. Corlett's group (NRL Contract N00014-75-C-0185). Our present aims are: to study rates of mixing of the pressurant gas with the resident gas during pressurization; to discover how various parameters such as geometry, obstacle type and position, nozzle design and location, and pressurization time affect these rates; and to seek scaling rules which predict concentration history profiles in a geometrically scaled 324 cubic meter chamber, about one-half scale to most submarine compartments. Presented in this report are gas-mixing data in their reduced form from the NRL 5000-liter mixing chamber where an obstacle is present to impede gas flow. Fine wire thermocouples are used to measure gas temperatures from which pressurant concentration histories and thus mixing rates are inferred [12-14].

EXPERIMENT AND PROCEDURE

Apparatus

Figure 1 schematically shows the experimental arrangements. Tank 1 is a steel, cylindrical pressure tank with two convex ends, and it lies horizontally. Its volume is 2260 liters with a length of 2.33 m, a diameter of 1.07 m, and a mean-wall thickness of 9.5 mm. Tank 2 is a steel, cylindrical modified decompression chamber. Its volume is 5000 liters with a length of 2.74 m, a diameter of 1.55 m, and a mean-wall thickness of 11.1 mm. A hatch on one end opens inwardly, allowing access to the interior. An air lock is centered on the opposite end. The chamber was modified to allow numerous gas-collecting tubes, wires, thermocouples, and pipes to penetrate the walls. The original interior nozzle system, lighting system, and 6.4 mm steel floor plates remain; all other hardware has been removed. In addition, two thin aluminum plates have been laid on the floor plates to mount the obstacle and aluminum rods which position Type K, chrome-alumel thermocouples at desired locations within the chamber (see Fig. 2). Pressure transducers are connected to both tanks to indicate pressure during the experiments. A more detailed description of the equipment can be found in NRL Memorandum Reports by Stone et al. [6-11].

Manuscript submitted September 8, 1981.

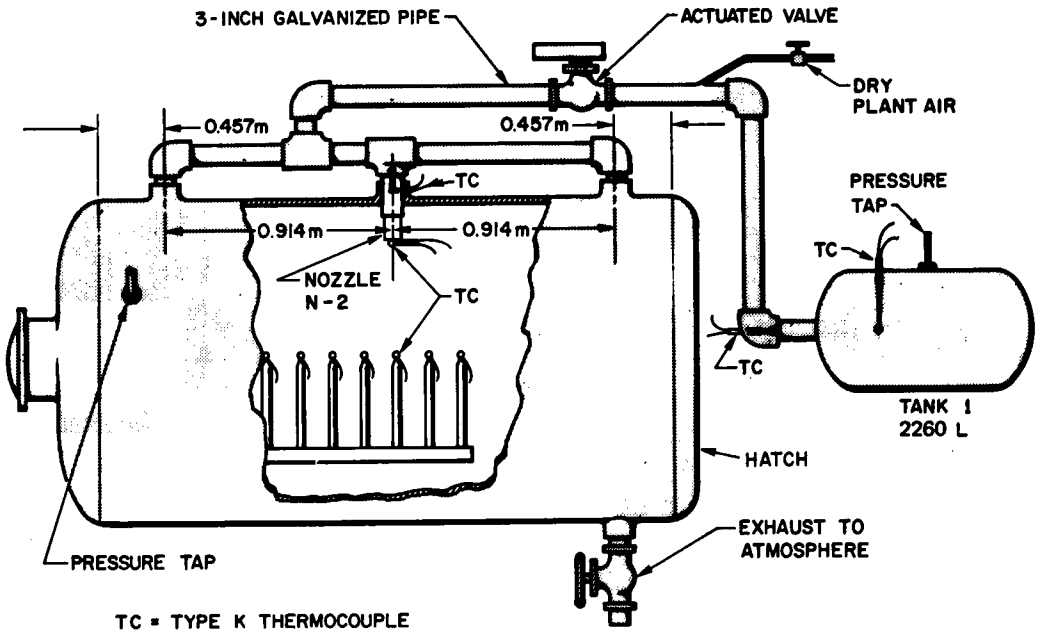

Fig. 1 — Schematic of apparatus

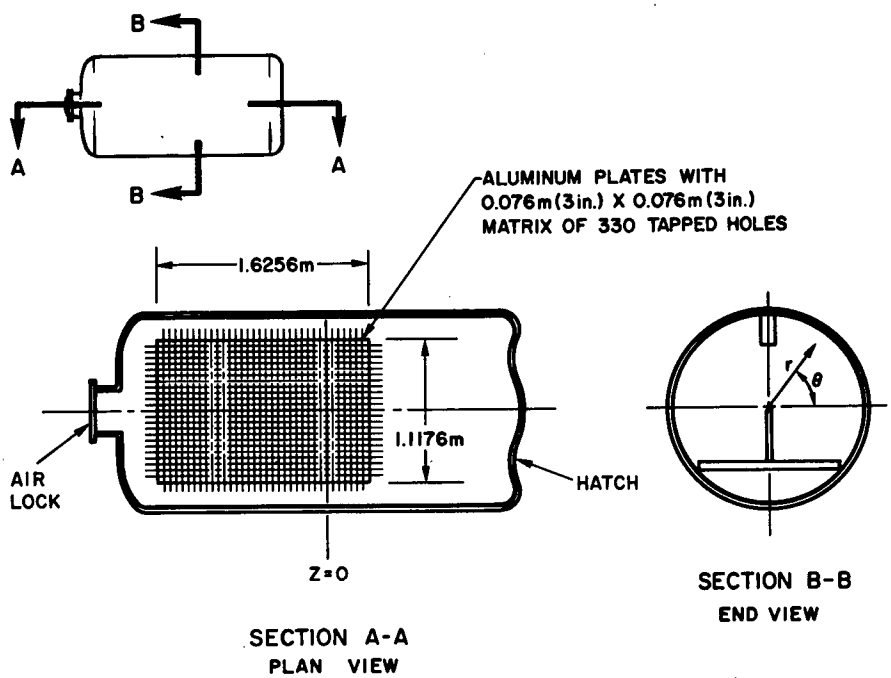

Fig. 2 — Plan and end views of Tank 2, showing cylindrical coordinates and matrix of 330 tapped holes

UNCLASSIFIED

In this work, an additional, solid, rectangular obstacle is introduced to impede gas flow and simulate clutter. The obstacle is stainless steel, 0.460 m square top and 1.0 m tall. Thin rectangular wings protruding from the sides at the bottom enable the obstacle to be secured to the floor plates. Figure 3 shows locations of the obstacle, the nozzle, and the thermocouples.

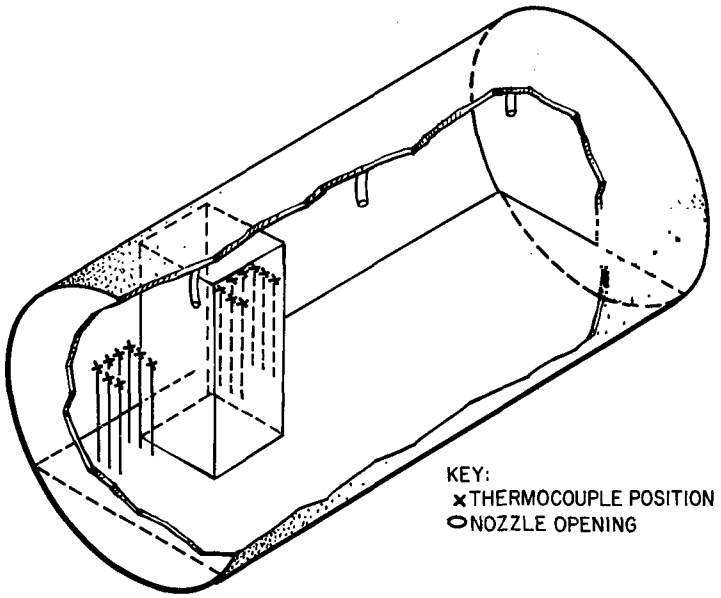

Fig. 3 — Interior view of Tank 2

For convenience, a cylindrical coordinate system (r,θ,z) was chosen to indicate chamber interior positions in Tank 2. As Fig. 2 shows, a vertical plane through the center of the cylindrical tank normal to its center axis is taken as the $z = 0$ plane, with the air lock selected as the positive z direction and the hatch as the negative z direction. Obstacle, thermocouple, and nozzle arrays are characterized by the coordinate system.

Table 1 summarizes the test sets in terms of experimental variables. Configurations 1 to 3 vary only in respect to their nozzle arrays, and consequently pressurization times. Filling pressures, obstacle location and type, and in situ temperature measuring points are left as a control. Table 2 details the descriptions of nozzle and thermocouple arrays and obstacle locations.

Procedure

The procedures for all test runs were identical. Tank 1 is charged with clean, dry air to a pressure of 689 kPa (6.8 atm); the air temperature is allowed to equilibrate for 5 min with the tank walls. Then, with Tank 1 pressure at about 657 kPa (6.5 atm) (ambient temperature) and Tank 2 pressure at 101.3 kPa (1 atm) (ambient temperature) both Doric data logging systems are started by remote switch. The data loggers are allowed to run for approximately 30 s. Simultaneously, the actuated dump valve between Tanks 1 and 2 is opened and an event mark is recorded on a channel on a Doric system. Tank 2 is pressurized to 202.6 kPa (2 atm) absolute. Then the valve is closed and another event mark signals the termination of the gas dump. The Doric system records the mixing processes for 15 to 20 additional minutes and is then deactivated.

Table 1 — Summary of Test Sets

Test Configuration	1	2	3
Nozzle Array	I	II	III
Nozzle Diameter (mm)	15.2	15.2	15.2
Thermocouple Array	I	I	I
Obstacle Location	I	I	I
Filling Pressures	1.0 to 2.0 atmospheres		
Mean Dump Time (s)	30	15	10
Number of Good Experiment Runs	7	8	9
Run Numbers Data Assigned	202 203 205 206 208 209 211	300 301 302 306 307 308 309 310	103 104 105 106 107 113 114 116

Table 2 — Nozzle and Thermocouple Locations

Nozzle Arrays: # Nozzle ($r(m)$, Θ(rad), $z(m)$)

I	(1)	(0.483, $\pi/2$, 0)
II	(2)	(0.483, $\pi/2$, 0) (9.483, $\pi/2$, −0.914)
III	(3)	(0.483, $\pi/2$, 0.914) (0.483, $\pi/2$, 0) (0.483, $\pi/2$, −0.914

(Obstacle Location: ($r(m)$, Θ(rad), $z(m)$)
(Obstacle coordinates on horizontal diameter plane)

I (0.076, 0, 0.229), (0.533, 0, 0.229), (0.076, 0, 0.686), (0.533, 0, 0.686)

Thermocouple Array: ($r(m)$, Θ(rad), $z(m)$)

I	(1)	(0.076, 0, 0.991)
	(2)	(0.152, 0, 0.991)
	(3)	(0.229, 0, 0.991)
	(4)	(0.229, 0, 0.914)
	(5)	(0.229, 0, 0.838)
	(6)	(0.229, 0, 0.762)
	(7)	(0.152, 0, 0.762)
	(8)	(0.076, 0, 0.762)
	(9)	(0.076, 0, 1.152)
	(10)	(0.152, 0, 0.152)
	(11)	(0.229, 0, 0.152)
	(12)	(0.229, 0, 0.076)
	(13)	(0.229, 0, 0)
	(14)	(0.229, 0, −0.076)
	(15)	(0.152, 0, −0.076)
	(16)	(0.076, 0, −0.076)

UNCLASSIFIED

The data recorded on the two Doric system tapes in EBCIDIC character set are converted to ASCII and merged together programmatically on a Hewlett-Packard 21MX minicomputer. A set of programs [15] are then used to reduce and plot the data.

DATA ANALYSIS

Corlett et al. [14] have provided a method of transient thermodynamic analysis of the temperature data to infer statistical scale-modeled pressurant mixing at each thermocouple site. A brief synopsis of their analysis is provided here, but a complete description can be found elsewhere [12,14]. The desired results are a history of local pressurant mole fraction, X_i, at each interior thermocouple location in the chamber during a scaling run.

Two phenomena complicate this analysis. First, the chamber contents are far from adiabatic and heat transfer from the gas to the walls is dependent on position. To account for this heat transfer and still avoid having to quantify position dependence, it is assumed that the molar gas-to-wall heat transfer coefficient is independent of interior position. The validity of this assumption seems allowable for strongly turbulent flow regimes and depends on how well the regime averages along the inside surface of the chamber. Second, the pressurant temperature is time dependent after entering the chamber. While the temperature of the pressurant gas increases as the chamber is being filled, pressurant gas dumped towards the end of the filling time will tend towards a higher temperature than its predecessing pressurant gas. Also, the temperature of a parcel of pressurant increases relative to its value at injection during compression. It is assumed only that the pressurant age distribution is the same at every interior point only to avoid the otherwise necessary quantification of time dependent flow regime. This assumption is not too far in error for times not too near initial valve opening and after mixing is complete.

The local heat transfer rate per mole of gas, $\dot{Q}$, is

$$\dot{Q} = \left(\frac{\beta R}{\theta}\right)\left(\bar{T} - T_0\right) \tag{1}$$

where R is the gas constant, $\bar{T}$ is the average temperature in the enclosure, and T_0 is the initial temperature. Since turbulent convective heat transfer is nearly proportional to flow velocity which in turn is roughly proportional to $d\ln N/dt$ during filling, we define a characteristic time θ during pressurization $(0 < t < t_c)$ and after pressurization $(t > t_c)$, where t is anytime, t_c is the enclosure filling time, and θ_c is the characteristic time taken just prior to the completion of dumping. We define:

$$\theta \triangleq \left(\frac{d\ln N}{dt}\right)^{-1} \quad \text{for } 0 \leqslant t \leqslant t_c \tag{2}$$

and

$$\theta_c \triangleq \left(\frac{d\ln N}{dt}\right)^{-1}_{t \to t_c > t} \quad \text{for } t > t_c \tag{3}$$

where N is the number of moles of gas in the chamber. The dimensionless parameter β is used to characterize a molar heat transfer coefficient so that Eq. (1) is satisfied. A control volume energy balance shows that during compression

$$\beta = \frac{\gamma T_s - \bar{T} - (d\bar{T}/d\ln N)}{(\gamma - 1)(\bar{T} - T_0)} \quad 0 \leqslant t \leqslant t_c \tag{4}$$

and during postpressurization

$$\beta = -\frac{d\ln(\bar{T} - T_0)/dt}{(\gamma - 1)/\theta_c} \quad t > t_c \tag{5}$$

where γ is the specific heat ratio of air (C_p/C_v) and T_s is the pressurant supply temperature.

The mixing of gases which results in a parcel of gas at temperature T_i at any point and time can be determined as if a parcel of resident air at temperature T_a and a parcel of pressurant gas at temperature T_p mix instantaneously and adiabatically at constant pressure. The fraction of pressurant gas in the mixed parcel is X_i. The assumption of the pressurant age distribution being the same at every point allows an internal energy summation over the entire chamber

$$N\,\bar{T} = (N - N_0)\bar{T}_p + N_0\bar{T}_a \tag{6}$$

which results in

$$X_i = \frac{\bar{T}_a - T_i}{\bar{T}_a - \bar{T}_p} = \left(1 - \frac{N_0}{N}\right)\left(\frac{\bar{T}_a - \bar{T}_i}{\bar{T}_a - \bar{T}}\right) = \bar{X}\left(\frac{\bar{T}_a - \bar{T}_i}{\bar{T}_a - \bar{T}}\right) \tag{7}$$

where $\bar{X}$ is the molar average pressurant fraction for the entire chamber contents. The average temperature of pressurant gas, $\bar{T}_p$, is determined by a numerical integration over the chamber contents as shown

$$d\bar{T}_a = \frac{\gamma - 1}{\gamma}\,\bar{T}_a(d\ln P) - \mu[(T_s - \bar{T}/\gamma)d\ln P - \bar{T}_s d\ln\bar{T}] \tag{8}$$

where $\mu = \bar{T}_a - T_0/\bar{T} - T_0$ and T_s is the supply temperature of pressurant measured at a nozzle exit. Program CINFR[15] carries out this integration using the following initial boundary conditions: $\bar{T}_a = \bar{T} = T_0$, $T_s = T_{s0}$, $P = P_0$, and $\mu = \mu_0 \cong 1$. Thus the pressurant mole fraction at any point inside the chamber can be calculated for times both during and after pressurizaiton from only a temperature profile and measured pressure data.

A scale-modeling hypothesis is also produced. It states that, for geometrically similar enclosures, a dimensionless pressurant deviation, ξ, is a unique function of dimensionless time, τ, at homologous model and prototype points regardless of enclosure pressure level or pressurization rate [14]. Dimensionless time is defined for the filling process as

$$\tau = \frac{\bar{X}}{\bar{X}_c} \quad 0 < t < t_c \tag{9}$$

and for postfilling as

$$\tau = \frac{t - t_c}{\theta_c} + 1 \quad t > t_c \tag{10}$$

where $\theta_c = -[\ln(1 - \bar{X})/dt]^{-1}_{t \to t_c}$ can be used. The dimensionless pressurant deviation is defined as

$$\xi = \frac{X - \bar{X}}{\bar{X}_c} \tag{11}$$

where X is the inferred pressurant mole fraction at any time τ; $\bar{X}$ is the molar average pressurant fraction where all pressurant added to the chamber in time τ is perfectly mixed with the chamber resident gas; and $\bar{X}_c$ is the maximum, final value of $\bar{X}$ at time $t = t_c$. Notice the pressurant deviation is positive when the chamber gas is pressurant rich, negative when pressurant poor, and zero when completely mixed.

This report provides a relationship for pressurant gas concentrations as a function of time and position so that:

(1) the gaseous mixing which results from the turbulent flow around an obstacle can be inspected and described in some way; and

(2) mixing can be characterized and predicted for any geometrically similar enclosure with a geometrically similar flow regime.

This relationship is statistically averaged over several scaling runs for each test flow configuration.

UNCLASSIFIED

RESULTS

As mentioned earlier, a minicomputer is utilized to systematically reduce and analyze the data for each test configuration. Table 3 indexes all data charts produced by computer software. A first pair of programs is responsible for reducing the data in each run into tabular form. (See Tables 4, 10, and 16 for a summary of raw data.) The first column is time in seconds where $t = 0$ is the time when pressurization of Tank 2 begins. Notice that the pressure and temperature of the pressurant gas in Tank 1 is only noted during pressurization. The pressure in Tank 2 (noted as Fill tank) is given during the entire run with the in situ thermocouple. Although the data loggers collect almost three compete scans of data per second, data points are averaged down to integer-second points. This was necessary since each data logger scans at its own intrinsic speed although their internal clocks are initially synchronized. All temperatures are reported in degrees Kelvin and pressures in megabars. A table showing the location of each thermocouple in cylindrical coordinates is provided on the reduced data tables for convenience.

Table 3 — Index of Data Tables

(3)	(1)	(2)	Configuration Numbers in Table 1
	Table Number		Table Heading
4(A-J)	10(A-L)	16(A-I)	Temperature Data Tables (per scaling run)
5(A-I)	11(A-I)	17(A-H)	Inferred Pressurant Distribution (per scaling run)
6	12	18	Mean Value of All Quantities (per scaling configuration)
7	13	19	Normalized Mean Local Pressurant Fractions
8	14	20	Standard Deviation of Mean Local Pressurant Fraction
9	15	21	Deviations of Mean Local Pressurant Fractions

Note: Tables 4-21 appear at end of report.

A second pair of programs run on the minicomputer manipulates the reduced data tables from one test configuration into two new sets of tables. In the first set, for each test run, a table of inferred pressurant distribution is calculated. Time is given in seconds, temperature is in degrees centigrade, and other quantities are dimensionless. The first six columns give: time t, molar mean temperature $\overline{T}$; mean resident air temperature $\overline{T}_a$; mean pressurant air temperature $\overline{T}_p$; the dimensionless coefficient β; and the ratio β/Θ. Columns 8 through 20 are the calculated pressurant fractions X_i at each of the 13 respective thermocouples, and column 7 is the mean pressurant fraction $\overline{X}$ (see Tables 5, 11, and 17).

The second set consists of four groups of statistical tables calculated for each single test configuration. The first group of statistical tables (6, 12, and 18) consists of the mean values of all quantities described in the previous tables. A last column at dimensionless time, τ, is listed in column 21. The second group of statistical tables (7, 13, and 19) lists the normalized mean local pressurant fractions for each of the 13 thermocouple locations normalized by the mean pressurant fraction at the

end of dumping ($t = t_c$). Other tables (8, 14, and 20) indicate the calculated values for the statistical standard deviation of the mean local pressurant fractions. This value might be used to indicate a magnitude of precision in the preceding statistical charts. A last group of tables (9, 15, and 21) displays the pressurant deviation ξ, for each normalized time τ, in dimensionless increments of $+0.05$.

DISCUSSION

The reduced data for three obstructed air mixing configurations have been presented and can now be discussed to some degree. While it is not possible to verify the two modeling assumptions directly from the results, inspection of the Inferred Pressurant Distribution charts shows an almost constant value of beta during the filling interval for each run. This observation is in accord with the expected heat transfer between the walls and the surroundings for highly turbulent convective flow. While a convective heat transfer coefficient is not known for any position along the chamber wall, an averaged value over the entire chamber surface is presented and is now known to be constant while its value is required [15].

The thermodynamic treatment of the data no longer describes reality after complete mixing has been achieved. Now, variations in the temperature profile may be caused by several influences. First, flow inside the chamber eventually slows into a random laminar character as the gas kinetic energy is eventually dissipated by viscous drag forces. Second, the chamber itself may act as a heat sink for its contents and cause the gaseous contents to begin to cool. Last and least of consequence, the datalogging system is known to drift ($<0.6°C$) in an isothermal environment. Therefore, at some time after mixing is complete, a mixing profile is expected to show a deterioration of perfect mixing.

To characterize a mixing profile, we have plotted a dimensionless mixing deviation, δ, as a function of time.

$$\delta_i = \frac{X_i - \bar{X}}{\bar{X}} = \frac{X_i}{\bar{X}} - 1. \tag{12}$$

This value is effectively the difference between the actual pressurant concentration and its theoretical value if perfectly mixed normalized by its perfectly mixed value. Notice it is positive when pressure rich, negative when pressurant poor, and zero when theoretically mixed. Figures 4 to 6 show this plot at four locations for the test configurations 1 to 3, respectively. These graphs are the result of statistically averaged values of mixing deviation for runs with identical dump times for a given configuration. Inspection of their corresponding statistical standard deviation shows that the assorted peaks and curves before complete mixing are meaningful with good precision. For the purposes of the plotting software [16], it was necessary to indicate the right-hand limit of the commence of value opening as zero time in deference to previous practice.

Test configuration one is clearly shown to have the slowest, most stratified mixing profile. Here, one centered nozzle probably forms a wake as the discharged gases are reflected from the chamber floor. Flow vizualization films by Stone show that the pressurant gas ceases to jet almost a foot above the floor underneath the nozzle. During the first few seconds, a thermocouple's mixing curve initially agrees with intuition, i.e., thermocouples close to the nozzle are pressurant rich and those further away are pressurant poor. As a wake develops and scatters, the chamber contents become temporarily stratified. The pressurant concentration at a location may alternate being pressurant rich and poor. Thermocouple number five is shown to be located inside the wake's origin. Since it is close to the nozzle it remains pressurant rich much longer than the other locations.

Configurations two and three exhibit a different approach to complete mixing. In these cases, the flow circulation from more than one nozzle appears to become so turbulent that a pattern much more complicated than a wake may exist and mixing is much more rapid with respect to their dumping times.

UNCLASSIFIED

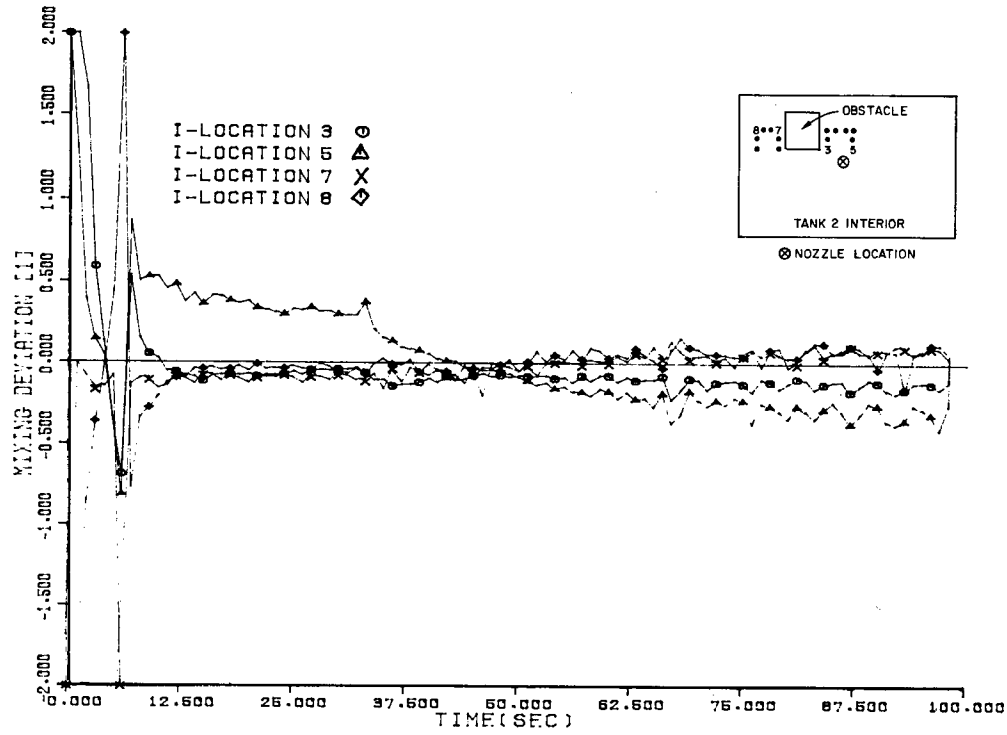

Fig. 4 — Test configuration one: one centered nozzle.
Dump time = 33.0

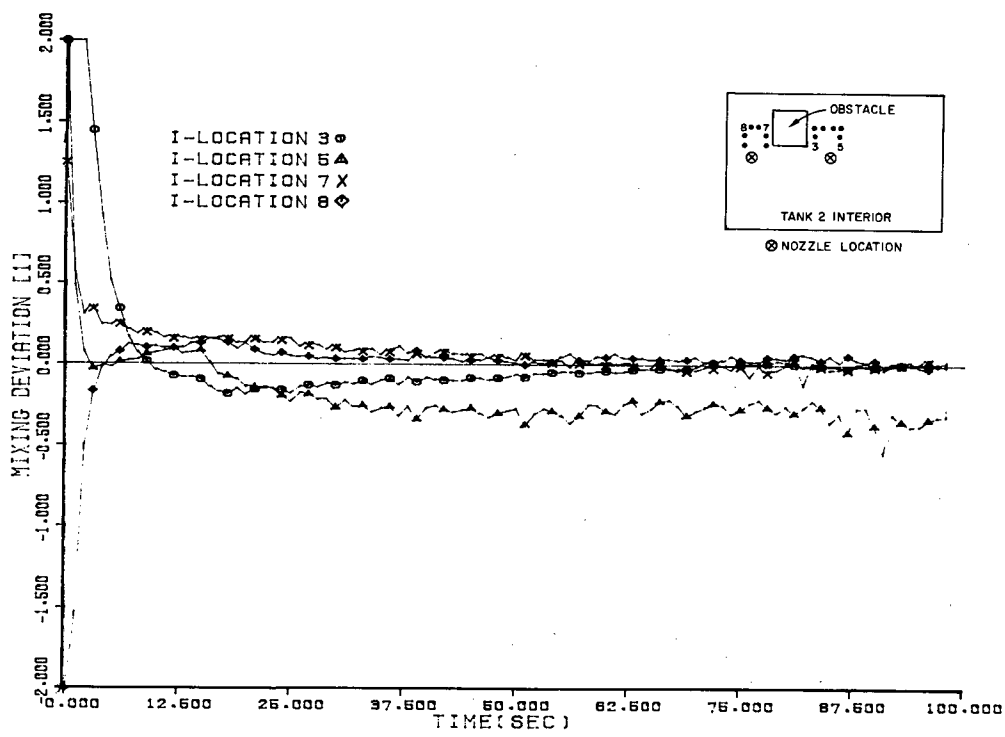

Fig. 5 — Test configuration two: two centered nozzles.
Dump time = 17.0

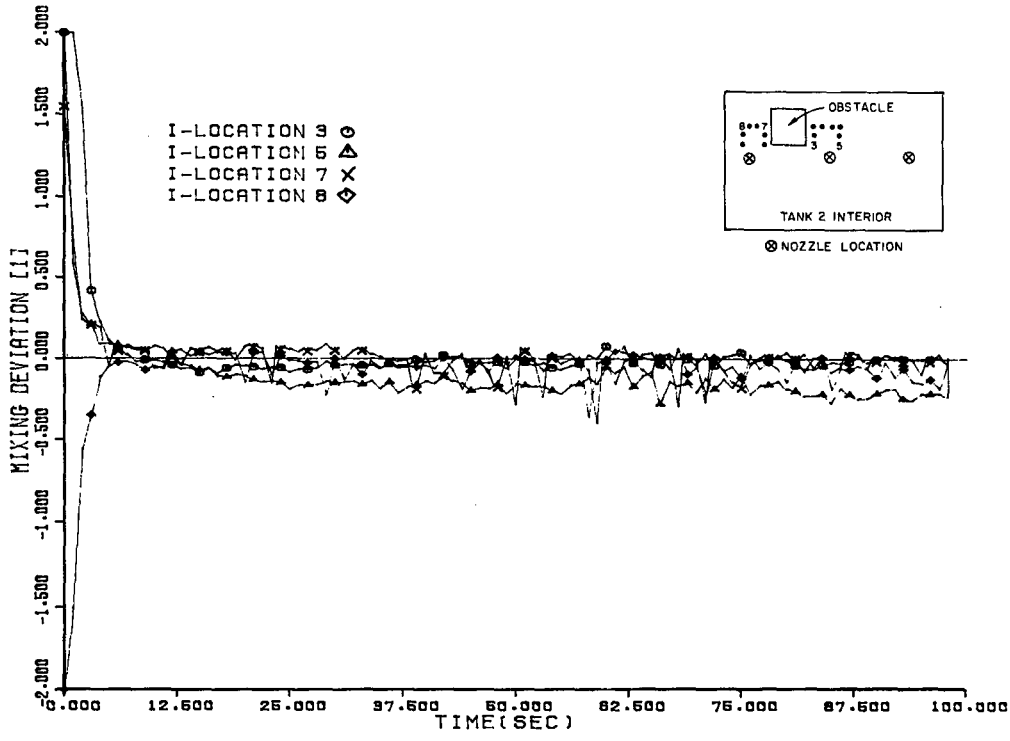

Fig. 6 — Test configuration three: three centered nozzles.
Dump time = 12.0

A scale-modeling hypothesis states for geometrically similar enclosures, the dimensionless pressurant deviation is a unique function of dimensionless time at homologous model and prototype points regardless of pressure level or pressurization rate [14]. These quantities have been defined earlier and are plotted in Figs. 7 to 9 corresponding to test configurations 1, 2, and 3. By hypothesis, these curves should look the same for any size chamber with similar geometry. In these graphs, the left-hand limit of the commence of valve opening is taken as zero dimensionless time, tau. Tau is unity when the valve has been fully closed, i.e., one dump time. The data for these plots come from the same scaling runs as the previous graphs after being statistically combined by program CINST. Mixing profiles of the same type are seen in these graphs; however, the mixing which was done during valve opening is now observable. For our most hindered location studied, our data show that mixing is complete within $\tau = 1.1$. A more detailed description of mixing field would require more than the thirteen thermocouple locations studied.

Since these configurations vary by the effects of nozzle number and location, the flow and mixing profiles vary. The degree of clutter by which a particular interior location is characterized is seen to have two effects. One effect is how well enclosed, or isolated a location is from the pressurant flow. This effect hinders mixing. A second effect is observed where gas is forced around proximal obstacles. Here, clutter may aid mixing as eddies are formed inside flow boundary layers or outside jet gas entrainment boundary layers. This might be considered similar to baffling in a mixing tank. A method of quantifying degree of clutter which incorporates both of these effects is presently intuitive, at best. This method of mixing analysis is instrumental in measuring degree of clutter and final mixing time.

UNCLASSIFIED

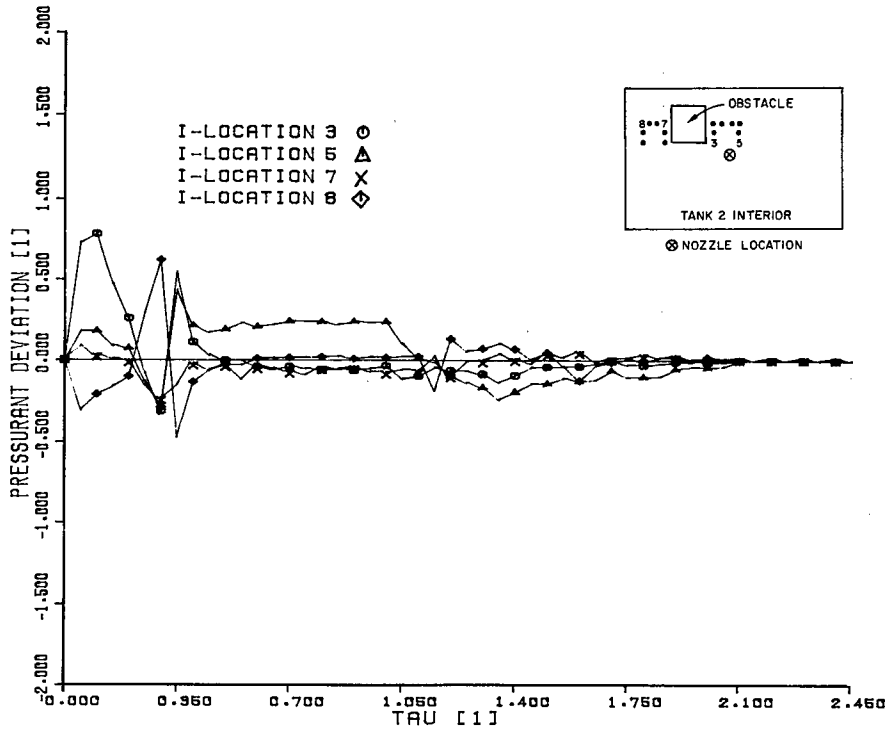

Fig. 7 — Test configuration one: one centered nozzle

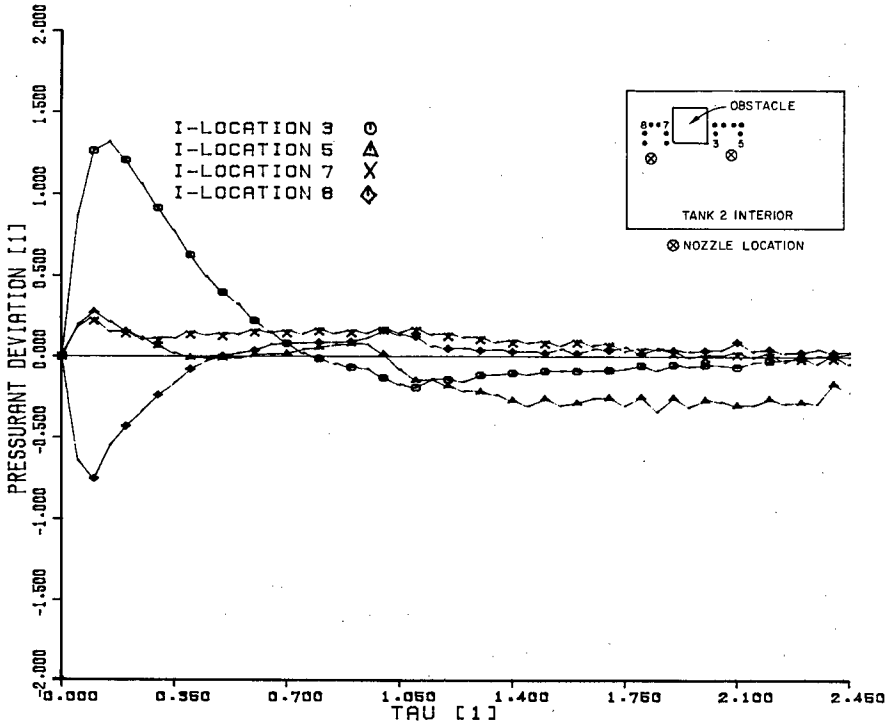

Fig. 8 — Test configuration two: two centered nozzles

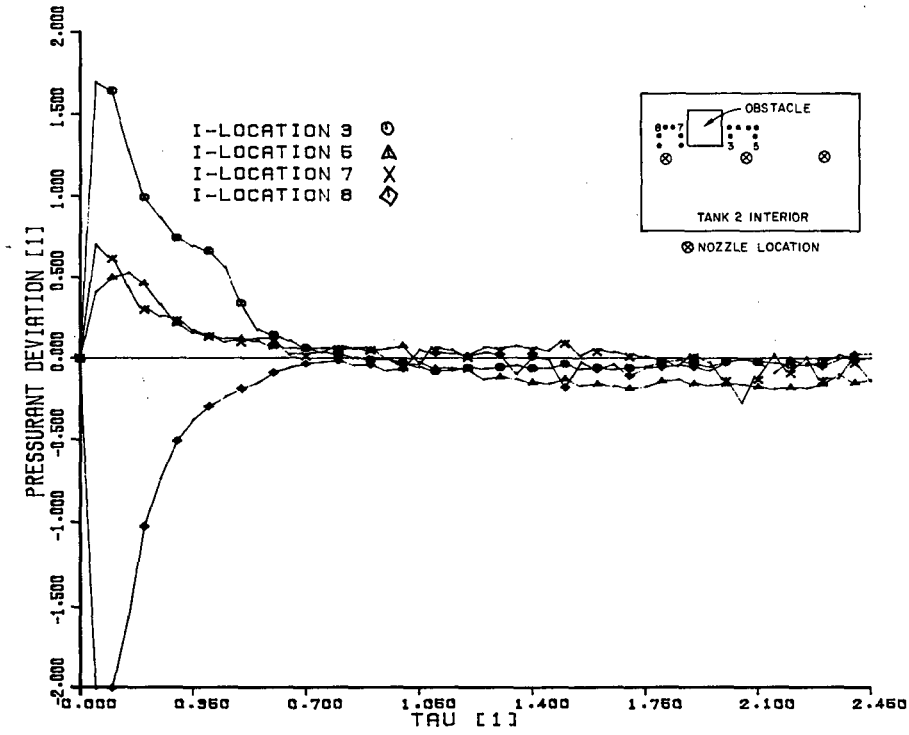

Fig. 9 — Test configuration three: three nozzles

CONCLUDING REMARKS

Presented are raw and reduced data from three cluttered air mixing experiments. The measurement of pressurant concentration distribution is based on temperature measurements in the mixing chamber. Although this is a relatively inexpensive method for gathering data from a number of enclosure points, it suffers from (a) the loss of precision due to modeling and thermodynamic assumptions and (b) the requirement for extended computer time to reduce the raw data. The first drawback can be alleviated by employing a more accurate method of monitoring pressurant inflow rate, and the second has been worked out as computer programs have become more versatile and efficient.

ACKNOWLEDGMENTS

We extend our appreciation to John Alexander and Tom Street for their electrical wizardry maintaining the electronic equipment for the NRL 5000-liter chamber and Ronald Gray III for his help running data reduction programs on the minicomputer. Finally, now that it is over, we forgive the minicomputer for providing countless hours of programming aggravation and repair servicing.

REFERENCES

1. H.W. Carhart and G.H. Fielding, "Application of Gaseous Fire Extinguishants in Submarines," paper presented on Halogenated Fire Extinguishing Agents, National Academy of Sciences, National Research Council (1972).

2. D.P. Dressler, R.S. Robinson, R.G. Gann, J.P. Stone, F.W. Williams, and H.W. Carhart, "Biological Effect of Fire Suppression by Nitrogen Pressurization in Enclosed Environments," J. Combustion Toxicology *4*, 325, 1977.

UNCLASSIFIED

3. P.A. Tatem, R.G. Gann, and H.W. Carhart, "Pressurization with Nitrogen as an Extinguishant for Fire in Confined Spaces," Combustion Science and Technology *7*, 213, 1973.

4. P.A. Tatem, R.G. Gann, and H.W. Carhart, "Pressurization with Nitrogen as an Extinguishant for Fires in Confined Spaces, II. Cellulosic and Fabric Fuels," Combustion Science and Technology *9*, 255, 1974.

5. R.G. Gann, J.P. Stone, P.A. Tatem, F.W. Williams, and H.W. Carhart, "Suppression of Fires in Confined Spaces by Nitrogen Pressurization: III Extinction Limits for Liquid Pool Fires," Combustion Science and Technology *18*, 155, 1978.

6. J.P. Stone, P.A. Tatem, and F.W. Williams, "Combustion Scaling and Modeling: Fire Suppression by Nitrogen Pressurization I—Preliminary Test Data, NRL 5000-liter Facility, Test Configuration 1," NRL Memorandum Report 3633, February 1978.

7. J.P. Stone, J.I. Alexander, and F.W. Williams, "Combustion Scaling and Modeling: Fire Suppression by Nitrogen Pressurization II—Test Data, NRL 5000-liter Facility, Test Configuration 1," NRL Memorandum Report 3740, March 1978.

8. J.P. Stone, J.I. Alexander, and F.W. Williams, "Combustion Scaling and Modeling: Fire Suppression by Nitrogen Pressurization III—Test Data, NRL 5000-liter Facility, Test Configurations 2 and 3," NRL Memorandum Report 3776, May 1978.

9. J.P. Stone, J.I. Alexander, and F.W. Williams, "Combustion Scaling and Modeling: Fire Suppression by Nitrogen Pressurization IV—Test Data, NRL 5000-liter Facility, Test Configurations 1, 2, and 3," NRL Memorandum Report 3791, June 1978.

10. J.P. Stone, J.I. Alexander, and F.W. Williams, "Combustion Scaling and Modeling: Fire Suppression by Nitrogen Pressurization V—Test Data, NRL 5000-liter Facility, Test Configurations 4, 5, and 6," NRL Memorandum Report 3792, July 1978.

11. J.P. Stone, J.I. Alexander, and F.W. Williams, "Combustion Scaling and Modeling: Fire Suppression by Nitrogen Pressurization VI—Test Data, NRL 5000-liter Facility, Test Configurations 6, 5, and 4," NRL Memorandum Report 3793, August 1978.

12. R.C. Corlett, "Concentration and Temperature Similarity," P.L. Blachshear (Ed.), in *Heat Transfer in Fires* (Scripta Book Co., Washington, D.C., 1974), pp. 153-162.

13. W.W. Jones, J.P. Boris, and E.S. Oran, "Calculation of Gas Temperatures in N_2 Pressurization Experiments," NRL Memorandum Report 3542, June 1977.

14. R.C. Corlett, J.P. Stone, and F.W. Williams, "Scale Modeling of Inert Pressurant Distribution," Fire Technology *16*, November 1980.

15. R.C. Corlett, University of Washington, original computer programs written under Contract N00014-75-C-1085 (1979). A. Broder and D. Indritz originally mated these programs to the NRL facility. Revisions made by F.W. Williams and S.R. Lustig to handle longer dump times.

16. Programs STATS and TAUPL written by S.R. Lustig.

Table 4A — Scaling Run 103, Test Configuration 3: Three 1.52 cm Nozzles

5 C METER CHAMBER OBSTRUCTED GAS MIXING RUN 103

TIME (SEC)	PRESSURANT FOW - TOTAL P (BAR)	PRESSURANT FOW - TOTAL T (DEG K)	FILL-TANK P (BAR)	THERMOCOUPLES LOCATION I T(DEG K) 1	2	3	4	5	6	7	8	9	10	11	12	13
-5	***	***	1.048	299.5	299.3	299.1	299.1	298.8	299.4	297.8	298.1	297.8	298.2	298.0	297.9	297.8
-4	***	***	1.046	299.4	299.3	299.2	299.1	298.8	299.4	297.8	298.1	297.8	298.2	298.0	297.9	297.8
-3	***	***	1.068	299.5	299.3	299.2	299.1	298.9	299.4	297.7	298.1	297.8	298.2	298.0	297.8	297.7
-2	***	***	1.040	299.5	299.3	299.1	299.1	298.8	299.4	297.8	298.1	297.8	298.2	298.0	297.8	297.8
-1	***	***	1.055	299.4	299.4	299.2	299.1	298.8	299.4	297.7	298.1	297.8	298.2	298.0	297.8	297.7
0	6.378	290.9	1.046	299.5	299.3	299.2	299.1	298.9	299.4	297.8	298.1	297.8	298.2	298.0	297.9	297.8
1	6.273	304.3	1.071	300.5	300.0	299.1	299.5	300.2	301.2	298.2	301.4	299.9	300.5	299.7	299.5	298.8
2	6.012	290.6	1.134	304.4	305.9	303.8	305.1	303.6	306.4	302.5	305.7	303.4	304.7	303.6	303.9	303.4
3	5.640	286.0	1.221	308.5	310.4	303.7	309.8	307.9	310.6	306.5	309.4	306.8	308.6	306.9	307.8	307.4
4	5.309	283.9	1.306	310.9	312.4	296.5	312.1	310.6	312.4	309.0	310.8	309.2	310.4	309.5	309.9	309.7
5	4.998	282.9	1.381	311.9	313.5	312.8	312.7	311.5	313.4	310.2	311.6	310.6	311.8	310.7	310.9	310.8
6	4.706	281.4	1.455	313.0	314.1	313.7	313.8	312.3	314.1	311.0	312.3	311.4	312.3	311.3	312.0	311.5
7	4.542	279.9	1.494	313.3	314.7	313.1	314.0	312.4	313.8	311.2	312.2	311.6	313.1	311.7	311.9	311.9
8	4.286	279.0	1.557	313.6	314.5	313.8	314.0	313.0	313.8	311.4	312.2	311.8	313.2	311.8	311.9	311.7
9	4.055	277.8	1.638	313.7	314.4	313.2	313.8	312.5	313.7	311.5	312.0	312.1	313.0	312.0	311.7	311.7
10	3.847	276.6	1.667	313.6	314.5	313.2	313.8	312.3	313.4	311.5	311.9	312.0	313.0	311.9	311.8	311.9
11	3.651	275.9	1.724	313.3	314.1	312.9	313.5	312.4	313.4	311.3	311.9	311.6	312.6	311.5	311.7	311.7
12	3.484	285.3	1.768	313.4	313.8	313.3	313.5	312.3	313.6	311.4	311.6	311.6	312.5	311.6	311.6	311.7
13	3.352	282.5	1.807	313.0	313.5	312.8	313.1	312.2	312.8	311.0	311.0	311.3	312.1	311.3	311.1	311.3
14	3.366	281.5	1.796	312.4	312.7	311.9	312.2	311.8	312.1	310.6	310.7	310.9	311.7	310.9	310.8	311.0
15	***	***	1.804	312.2	312.3	311.7	311.9	311.6	311.8	310.1	310.2	310.4	311.2	310.4	310.2	310.3
16	***	***	1.804	311.8	312.0	311.5	311.5	311.6	311.2	309.7	309.8	310.1	310.9	310.1	309.8	309.9
17	***	***	1.793	311.6	311.6	311.0	311.1	311.1	311.1	309.4	309.7	309.7	310.5	309.6	309.6	309.6
18	***	***	1.785	311.3	311.3	310.9	311.0	311.0	310.9	308.9	309.4	309.4	310.2	309.3	309.4	309.3
19	***	***	1.806	311.1	311.0	310.6	310.7	310.8	310.7	308.8	309.3	309.1	310.0	309.2	309.2	309.0
20	***	***	1.785	310.7	310.8	310.2	310.3	310.6	310.3	308.4	309.0	308.9	309.9	308.7	309.0	308.8
21	***	***	1.777	310.6	310.6	310.2	310.2	310.3	310.2	308.1	308.7	308.7	309.6	308.5	308.7	308.4
22	***	***	1.796	310.4	310.3	310.0	310.0	310.1	310.0	307.8	308.5	308.5	309.4	308.4	308.4	308.0
27	***	***	1.787	309.5	309.4	309.3	308.9	309.3	309.3	306.8	307.8	307.2	308.6	307.4	307.3	306.8
32	***	***	1.770	308.8	308.5	308.3	308.1	308.3	308.4	306.1	306.8	306.3	307.9	306.6	306.5	306.2
37	***	***	1.769	308.1	307.6	307.6	307.0	307.6	307.6	305.5	305.9	305.7	306.7	306.0	305.4	305.2
42	***	***	1.788	307.0	306.3	306.5	305.9	306.6	306.6	304.7	305.2	304.9	305.7	305.2	304.7	304.3
47	***	***	1.758	306.4	305.9	305.9	305.6	306.0	306.0	304.2	304.7	304.2	305.2	304.5	304.2	304.0
52	***	***	1.789	305.8	305.7	305.4	305.1	305.5	305.5	303.8	304.0	303.9	304.8	304.3	303.6	303.3
57	***	***	1.753	305.4	304.9	304.9	304.7	305.0	305.0	303.5	303.5	303.5	304.4	303.8	303.2	303.2
62	***	***	1.769	304.9	304.4	304.5	304.1	304.5	304.5	303.0	303.0	303.1	303.7	303.3	302.8	302.8
67	***	***	1.780	304.5	304.1	304.2	303.8	304.4	304.2	302.5	302.7	302.8	303.3	303.0	302.4	302.3
72	***	***	1.758	304.1	303.8	303.9	303.5	304.0	304.0	302.3	302.4	302.5	303.0	302.6	302.2	302.0
82	***	***	1.780	303.8	303.5	303.5	303.1	303.7	303.6	301.8	302.3	302.1	302.5	302.2	301.8	301.5
92	***	***	1.786	303.3	303.1	303.0	302.8	303.2	303.1	301.3	301.9	301.6	302.2	301.8	301.5	301.2
102	***	***	1.743	303.0	302.7	302.7	302.5	303.0	302.9	301.2	301.5	301.3	301.8	301.3	301.2	301.2
112	***	***	1.758	302.8	302.5	302.4	302.3	302.9	302.6	300.9	301.2	301.0	301.5	301.1	300.9	300.9
122	***	***	1.745	302.6	302.3	302.2	302.0	302.7	302.4	300.8	300.9	300.9	301.2	300.9	300.7	300.9

I	COORDINATES R (M)	THETA (DEG)	Z (M)
1	0.229	00	0.152
2	0.229	00	0.000
3	0.076	00	0.152
4	0.102	00	0.076
5	0.076	00	-0.076
6	0.152	00	0.152
7	0.229	00	0.762
8	0.229	00	0.991
9	0.076	00	0.076
10	0.229	00	-0.076
11	0.152	00	0.762
12	0.229	00	0.914
13	0.229	00	0.838

Table 4B — Scaling Run 104, Test Configuration 3: Three 1.52 cm Nozzles

5 C METER CHAMBER OBSTRUCTED GAS MIXING RUN 104

TIME (SEC)	PRESSURANT FOW - TOTAL. P (BAR)	T (DEG K)	FILL-TANK P (BAR)	THERMOCOUPLES LOCATION I T(DEG K) 1	2	3	4	5	6	7	8	9	10	11	12	13
-5	***	***	1.041	300.0	299.9	299.8	299.6	299.5	300.0	298.5	298.6	298.4	298.8	298.5	298.5	298.5
-4	***	***	1.023	300.0	299.9	299.8	299.6	299.5	300.0	298.6	298.6	298.4	298.8	298.5	298.5	298.7
-3	***	***	1.049	300.0	299.9	299.7	299.6	299.5	300.0	298.5	298.6	298.3	298.8	298.5	298.5	298.5
-2	***	***	1.061	300.0	299.9	299.8	299.6	299.5	300.0	298.5	298.6	298.3	298.8	298.6	298.4	298.4
-1	***	***	1.040	300.0	299.9	299.8	299.6	299.5	300.0	298.5	298.6	298.3	298.9	298.5	298.5	298.5
0	6.364	291.2	1.048	300.0	299.9	299.7	299.7	299.5	300.0	298.5	298.6	298.3	298.8	298.5	298.5	298.4
1	6.236	307.3	1.065	301.9	301.5	299.5	301.0	301.3	303.1	299.5	302.6	300.9	301.3	300.9	300.5	300.0
2	5.860	288.0	1.165	307.3	308.5	307.1	307.9	305.9	309.3	305.2	307.7	305.7	306.9	306.0	306.0	305.6
3	5.493	285.2	1.255	310.9	312.0	310.9	311.9	309.4	312.7	308.2	310.6	308.2	309.9	308.8	309.4	308.9
4	5.280	283.9	1.307	311.8	313.8	313.4	312.9	310.6	313.3	309.8	311.4	310.0	311.7	310.2	310.3	310.2
5	4.971	282.8	1.386	312.9	314.5	313.6	313.8	311.6	314.0	310.9	312.0	311.3	312.7	311.3	311.5	311.3
6	4.686	281.4	1.445	313.7	314.9	313.4	314.5	312.5	314.5	311.5	312.6	312.0	313.4	311.6	312.2	312.1
7	4.427	279.9	1.519	314.3	314.7	313.6	314.5	313.3	314.9	311.8	312.9	312.2	313.3	312.0	312.6	312.5
8	4.184	279.1	1.581	314.5	315.0	313.3	314.9	313.2	314.7	311.9	312.6	312.2	313.6	311.8	312.5	312.3
9	3.968	277.8	1.628	314.4	314.8	313.5	314.6	313.0	314.3	311.7	312.5	312.1	313.4	311.8	312.4	312.3
10	3.747	276.6	1.705	314.0	314.5	313.7	313.9	312.8	314.1	311.7	312.3	312.0	312.9	311.9	312.2	312.0
11	3.642	275.9	1.705	313.8	314.5	313.8	314.0	312.7	313.8	311.6	312.2	312.0	313.1	311.6	312.3	312.2
12	3.460	284.5	1.781	313.5	314.0	313.4	313.6	311.7	313.5	311.9	311.9	312.0	312.8	312.0	311.9	312.0
13	3.385	281.0	1.770	313.2	313.5	312.9	313.2	312.1	313.1	311.7	311.6	311.7	312.2	311.5	311.7	311.9
14	3.390	281.7	1.790	312.9	313.0	312.6	312.6	311.9	312.7	311.0	311.0	311.0	311.8	311.0	311.0	311.1
15	***	***	1.772	312.6	312.5	312.2	312.2	311.7	312.2	310.5	310.6	310.9	311.5	310.6	310.7	310.8
16	***	***	1.791	312.2	312.1	311.7	311.7	311.5	311.8	310.4	310.6	310.6	311.2	310.4	310.7	310.6
17	***	***	1.784	311.9	311.8	311.5	311.5	311.3	311.6	310.2	310.4	310.3	311.0	310.3	310.5	310.4
18	***	***	1.755	311.7	311.5	311.2	311.3	311.0	311.4	310.0	310.2	310.1	310.6	310.0	310.2	310.2
19	***	***	1.778	311.5	311.2	310.9	310.9	310.9	310.8	309.7	309.9	309.9	310.4	309.9	309.9	309.8
20	***	***	1.791	311.1	310.9	310.4	310.4	310.7	310.4	309.3	309.7	309.6	310.2	309.7	309.7	309.5
21	***	***	1.758	310.9	310.7	310.3	310.2	310.4	310.2	309.2	309.6	309.5	310.2	309.5	309.6	309.5
22	***	***	1.777	310.6	310.5	310.1	309.9	310.2	309.9	309.0	309.5	309.3	309.9	309.4	309.5	309.2
27	***	***	1.774	309.4	309.1	309.2	308.7	309.1	308.8	307.9	308.7	308.1	308.4	308.2	308.4	308.0
32	***	***	1.774	308.5	308.0	307.8	307.6	308.1	307.9	307.0	307.6	307.1	307.2	307.4	307.5	306.8
37	***	***	1.751	308.1	307.5	307.5	307.4	307.5	307.6	306.2	306.6	306.1	306.7	306.5	306.6	306.1
42	***	***	1.763	307.4	306.6	306.6	306.6	306.6	306.8	305.3	305.8	305.3	305.9	305.7	305.7	305.1
47	***	***	1.756	306.7	306.4	306.0	306.2	306.1	306.2	304.5	305.1	304.7	305.3	304.9	304.8	304.4
52	***	***	1.744	306.1	305.8	305.7	305.7	305.9	305.7	304.2	304.5	304.4	305.0	304.5	304.2	303.8
57	***	***	1.763	305.8	305.5	305.3	305.2	305.4	305.3	303.7	303.9	303.9	304.5	304.1	303.6	303.3
62	***	***	1.766	305.3	305.1	304.8	304.7	305.0	304.9	303.4	303.6	303.6	304.2	303.8	303.4	303.1
67	***	***	1.744	304.9	304.7	304.5	304.4	304.6	304.6	303.1	303.3	303.3	303.8	303.5	303.1	302.9
72	***	***	1.733	304.5	304.4	304.2	303.9	304.4	304.4	302.9	303.1	303.0	303.4	303.1	302.8	302.7
82	***	***	1.761	304.2	303.9	303.8	303.6	304.0	304.0	302.4	302.7	302.4	303.0	302.6	302.4	302.3
92	***	***	1.747	303.8	303.5	303.4	303.2	303.7	303.6	302.1	302.4	302.1	302.6	302.3	302.0	302.0
102	***	***	1.760	303.4	303.2	303.1	303.0	303.3	303.2	301.6	302.0	301.7	302.3	301.8	301.6	301.4
112	***	***	1.755	303.1	302.9	302.9	302.7	303.1	303.0	301.3	301.6	301.5	302.0	301.5	301.3	301.3
122	***	***	1.755	303.0	302.7	302.6	302.6	303.1	302.9	301.2	301.3	301.2	301.7	301.3	301.2	301.1
132	***	***	1.728	302.7	302.5	302.4	302.4	302.9	302.7	301.2	301.2	301.0	301.4	301.0	301.0	301.2
142	***	***	1.752	302.6	302.4	302.4	302.2	302.9	302.6	300.9	301.0	300.9	301.2	300.9	300.9	300.9
152	***	***	1.735	302.5	302.3	302.3	302.1	302.9	302.4	300.9	300.9	300.9	301.2	300.9	300.8	301.0
162	***	***	1.754	302.4	302.2	302.2	302.0	302.7	302.4	300.9	300.9	300.9	301.2	300.9	300.8	300.8

COORDINATES

I	R (M)	THETA (DEG)	Z (M)
1	0.229	00	0.152
2	0.229	00	0.000
3	0.076	00	0.152
4	0.102	00	0.076
5	0.076	00	-0.076
6	0.152	00	0.152
7	0.229	00	0.762
8	0.229	00	0.991
9	0.076	00	0.076
10	0.229	00	-0.076
11	0.152	00	0.762
12	0.229	00	0.914
13	0.229	00	0.838

UNCLASSIFIED

Table 4C — Scaling Run 105, Test Configuration 3: Three 1.52 cm Nozzles

5 C METER CHAMBER OBSTRUCTED GAS MIXING RUN 105

TIME (SEC)	PRESSURANT FOW - TOTAL, P (BAR)	T (DEG K)	FILL-TANK P (BAR)	THERMOCOUPLES LOCATION I T(DEG K) 1	2	3	4	5	6	7	8	9	10	11	12	13
-5	***	***	1.063	295.8	295.6	295.4	295.4	294.1	295.6	293.7	294.3	294.0	294.5	294.1	293.8	293.7
-4	***	***	1.055	295.8	295.6	295.4	295.4	294.1	295.7	293.8	294.3	293.9	294.5	294.0	293.8	293.8
-3	***	***	1.029	295.7	295.6	295.5	295.4	294.2	295.7	293.8	294.2	294.0	294.5	293.9	293.9	294.2
-2	***	***	1.058	295.8	295.6	295.4	295.4	294.1	295.6	293.8	294.3	293.9	294.5	294.1	293.9	293.8
-1	***	***	1.040	295.7	295.6	295.5	295.4	294.1	295.7	293.8	294.2	293.9	294.7	293.9	293.9	293.9
0	6.347	296.2	1.033	296.4	296.1	295.2	295.9	295.0	296.8	293.8	294.2	294.0	294.5	293.9	293.9	294.1
1	6.150	289.0	1.099	301.2	302.3	300.7	301.8	299.1	303.3	296.0	299.0	297.4	298.0	297.4	297.2	296.7
2	5.763	285.9	1.194	304.5	305.7	304.6	305.3	301.4	306.4	301.2	304.0	302.3	303.1	302.5	302.4	301.7
3	5.428	283.9	1.272	307.3	308.7	308.0	308.3	304.5	308.8	304.4	306.6	304.7	306.3	304.6	305.3	305.0
4	5.097	282.2	1.379	309.3	310.0	310.7	309.8	306.4	310.0	306.1	308.2	306.4	308.0	306.4	307.0	306.6
5	4.813	281.3	1.432	309.8	310.4	300.9	310.2	307.3	310.6	307.0	308.6	307.6	308.8	307.5	307.9	307.6
6	4.550	279.8	1.478	310.3	311.0	307.7	310.8	307.7	310.9	307.8	308.9	308.3	309.5	307.8	308.5	308.5
7	4.349	278.5	1.555	310.2	311.0	293.7	310.6	308.2	310.3	307.5	309.0	308.2	309.5	307.8	308.4	308.0
8	4.133	277.6	1.584	310.2	310.7	309.7	310.4	308.3	310.5	308.0	308.8	308.4	309.7	308.0	308.5	308.7
9	3.899	276.4	1.661	310.2	310.7	307.4	310.3	308.0	310.3	308.0	308.8	308.7	309.4	308.1	308.4	308.2
10	3.707	275.4	1.711	310.1	310.4	311.1	310.1	308.2	310.1	307.7	308.5	308.3	309.3	308.1	308.2	308.2
11	3.527	284.7	1.734	310.2	310.3	310.2	310.2	308.1	310.2	307.8	308.3	308.4	309.1	308.1	308.1	308.2
12	3.409	283.3	1.808	310.2	310.0	309.5	309.9	307.7	310.0	307.5	308.2	307.8	308.8	308.1	308.0	307.9
13	3.385	280.2	1.793	309.7	309.5	309.3	309.4	307.8	309.2	306.9	307.5	307.4	308.5	307.1	307.3	307.3
14	***	***	1.774	308.9	308.9	308.8	308.7	307.4	308.6	306.5	306.8	306.9	308.1	306.7	306.8	306.8
15	***	***	1.788	308.8	308.7	308.3	308.2	307.3	308.1	306.0	306.5	306.5	307.8	306.4	306.4	306.4
16	***	***	1.778	308.3	308.4	307.9	307.9	307.0	307.7	305.8	306.2	306.4	307.4	305.9	306.1	306.1
17	***	***	1.801	308.0	308.1	307.4	307.5	306.7	307.3	305.3	305.9	305.9	307.1	305.8	305.8	305.7
18	***	***	1.777	307.8	307.8	307.1	307.3	306.3	307.1	305.1	305.7	305.6	306.8	305.4	305.6	305.5
19	***	***	1.796	307.5	307.3	307.1	307.2	306.0	306.9	304.5	305.5	305.2	306.5	305.1	305.2	305.0
20	***	***	1.765	307.4	307.0	306.8	306.8	305.9	306.6	304.5	305.1	304.9	306.4	304.8	304.9	304.8
21	***	***	1.781	307.3	306.8	306.7	306.6	305.8	306.6	304.2	304.9	304.6	306.1	304.5	304.7	304.4
26	***	***	1.778	306.1	305.7	305.2	305.3	304.6	305.4	303.1	303.9	303.5	305.2	303.7	303.4	303.3
31	***	***	1.789	305.2	304.5	304.5	304.5	303.8	304.8	302.2	303.1	302.4	304.0	302.2	302.6	302.3
36	***	***	1.755	304.4	303.6	303.5	303.5	303.0	303.8	301.6	302.4	301.8	303.1	301.9	302.1	302.0
41	***	***	1.744	303.5	302.8	303.0	302.5	302.4	303.1	301.0	302.0	301.2	302.0	301.3	301.3	301.1
46	***	***	1.782	302.9	302.3	302.4	302.1	301.7	302.4	300.4	301.5	300.8	301.5	301.1	300.8	300.3
51	***	***	1.769	302.3	301.7	301.8	301.3	301.0	301.8	300.0	300.9	300.2	301.0	300.4	300.3	300.0
56	***	***	1.758	301.8	301.0	301.2	300.9	300.5	301.3	299.7	300.3	299.8	300.4	299.9	299.7	299.5
61	***	***	1.764	301.3	300.8	300.9	300.5	300.2	300.9	299.1	299.5	299.3	300.0	299.5	299.0	298.9
66	***	***	1.763	301.0	300.4	300.5	300.2	299.9	300.5	298.8	299.2	298.9	299.5	299.1	298.8	298.7
71	***	***	1.758	300.7	300.2	300.2	300.0	299.5	300.3	298.5	298.8	298.8	299.5	298.9	298.4	298.5
81	***	***	1.750	300.2	299.7	299.7	299.5	299.3	299.9	298.0	298.4	298.3	299.0	298.3	298.1	298.1
91	***	***	1.774	299.8	299.5	299.4	299.1	299.0	299.5	297.4	298.1	297.9	298.5	298.1	297.7	297.4
101	***	***	1.770	299.5	299.0	299.1	298.8	298.7	299.1	297.3	298.0	297.6	298.1	297.8	297.4	297.2
111	***	***	1.740	299.1	298.8	298.8	298.6	298.6	299.0	297.3	297.5	297.5	297.9	297.4	297.3	297.3
121	***	***	1.753	298.8	298.6	298.6	298.4	298.6	298.7	296.9	297.5	297.3	297.5	297.2	297.0	296.9
131	***	***	1.753	298.7	298.5	298.4	298.2	298.4	298.6	296.8	297.2	297.0	297.4	297.0	296.8	296.8
141	***	***	1.741	298.5	298.3	298.3	298.1	298.2	298.5	296.6	296.9	296.9	297.3	296.8	296.6	296.7

COORDINATES

I	R (M)	THETA (DEG)	Z (M)
1	0.229	00	0.152
2	0.229	00	0.000
3	0.076	00	0.152
4	0.102	00	0.076
5	0.076	00	-0.076
6	0.152	00	0.152
7	0.229	00	0.762
8	0.229	00	0.991
9	0.076	00	0.076
10	0.229	00	-0.076
11	0.152	00	0.762
12	0.229	00	0.914
13	0.229	00	0.838

Table 4D — Scaling Run 106, Test Configuration 3: Three 1.52 cm Nozzles

5 C METER CHAMBER OBSTRUCTED GAS MIXING RUN 106

TIME (SEC)	PRESSURANT FOW - TOTAL. P (BAR)	T (DEG K)	FILL-TANK P (BAR)	THERMOCOUPLES LOCATION I T(DEG K) 1	2	3	4	5	6	7	8	9	10	11	12	13
-5	***	***	1.063	297.0	296.8	296.7	296.7	294.6	296.9	295.1	295.5	295.2	295.7	295.4	295.2	295.0
-4	***	***	1.035	296.9	296.8	296.7	296.7	294.6	296.9	295.2	295.4	295.2	295.7	295.2	295.2	295.2
-3	***	***	1.065	297.0	296.8	296.7	296.7	294.6	296.9	295.1	295.5	295.2	295.7	295.4	295.2	295.0
-2	***	***	1.033	296.9	296.8	296.7	296.7	294.6	296.9	295.2	295.5	295.2	295.7	295.2	295.2	295.3
-1	***	***	1.056	297.0	296.8	296.7	296.7	294.6	296.9	295.1	295.5	295.2	295.6	295.2	295.2	295.0
0	6.359	293.2	1.039	297.4	297.0	296.7	296.8	295.0	297.5	295.2	295.4	295.2	295.8	295.2	295.2	295.2
1	6.201	292.1	1.078	301.7	302.4	299.6	301.9	298.7	303.5	296.9	299.2	297.8	298.5	297.8	297.7	297.4
2	5.838	287.8	1.155	304.9	306.5	305.0	306.0	301.4	306.6	302.4	304.8	302.8	304.0	303.1	303.1	303.0
3	5.475	285.4	1.267	308.3	309.7	309.1	309.5	304.5	309.9	305.5	307.5	305.6	306.9	305.8	306.0	305.8
4	5.150	283.7	1.329	310.1	311.1	310.9	310.9	306.6	311.3	307.5	308.9	308.0	308.9	308.0	308.1	308.0
5	4.950	282.8	1.387	310.9	311.7	311.6	311.6	307.3	311.7	308.4	309.3	308.6	309.7	308.7	308.7	308.5
6	4.667	281.7	1.451	311.5	312.3	311.4	312.1	308.1	312.3	308.9	310.0	309.0	310.6	308.9	309.5	309.4
7	4.418	280.4	1.499	311.8	312.5	311.3	312.0	308.5	312.0	309.4	310.2	309.4	310.9	309.1	309.7	309.7
8	4.167	279.0	1.571	311.6	312.3	311.5	311.7	308.6	311.6	309.1	310.1	309.6	311.0	309.0	309.8	309.8
9	3.943	278.3	1.653	311.3	312.4	311.3	311.7	308.2	311.3	309.2	310.2	309.6	310.8	309.5	309.8	309.7
10	3.746	277.2	1.671	311.6	311.8	311.6	311.5	308.8	311.6	309.3	309.8	309.5	310.7	309.4	309.6	309.7
11	3.548	276.1	1.750	311.6	311.6	311.0	311.4	308.7	311.3	308.9	309.7	309.3	310.4	308.9	309.5	309.3
12	3.452	285.4	1.758	311.3	311.2	310.9	311.1	308.3	311.3	308.8	309.5	309.2	310.2	308.9	309.3	309.3
13	3.332	282.1	1.800	310.8	310.7	310.5	310.5	307.8	310.5	308.7	309.0	309.0	309.7	308.7	308.9	309.0
14	3.321	281.4	1.815	310.0	309.8	309.8	309.5	307.6	309.4	308.0	308.4	308.3	308.9	308.2	308.3	308.1
15	***	***	1.790	310.0	309.5	309.2	309.5	307.5	309.4	307.7	308.1	308.0	308.8	307.7	308.0	308.0
16	***	***	1.779	309.7	309.4	308.9	309.3	307.2	309.0	307.4	307.9	307.6	308.6	307.4	307.6	307.8
17	***	***	1.790	309.4	309.1	308.7	309.0	307.0	308.9	307.1	307.6	307.6	308.3	307.3	307.5	307.4
18	***	***	1.783	309.2	308.8	308.7	308.8	306.9	308.8	307.0	307.4	307.2	308.1	307.0	307.1	307.1
19	***	***	1.792	308.9	308.5	308.4	308.4	306.7	308.4	306.6	307.1	306.7	307.7	307.0	306.7	306.6
20	***	***	1.782	308.7	308.1	308.1	308.1	306.4	308.1	306.5	306.8	306.6	307.4	306.6	306.6	306.5
21	***	***	1.791	308.4	308.1	308.0	307.7	306.3	308.0	305.9	306.6	306.1	307.1	306.4	306.3	306.1
22	***	***	1.761	308.2	307.8	307.7	307.6	306.0	307.7	305.9	306.5	305.9	306.9	306.1	306.2	306.1
27	***	***	1.776	307.0	306.6	306.4	306.0	305.1	306.5	304.5	305.5	304.7	305.8	304.8	305.0	304.6
32	***	***	1.756	306.0	305.3	305.3	305.0	304.0	305.4	303.8	304.2	303.8	304.6	303.9	304.0	303.8
37	***	***	1.764	305.1	304.4	304.6	304.0	303.1	304.8	302.9	303.7	303.1	303.7	303.2	303.3	302.9
42	***	***	1.765	304.5	303.6	304.1	303.5	302.4	304.0	302.3	303.1	302.6	302.9	302.7	302.5	302.2
47	***	***	1.759	303.8	303.1	303.6	303.0	302.3	303.6	301.5	302.5	302.0	302.4	302.1	301.9	301.4
52	***	***	1.779	303.4	302.9	303.1	302.7	301.9	303.1	301.0	302.1	301.3	302.1	301.6	301.3	300.7
57	***	***	1.763	302.9	302.5	302.7	302.3	301.5	302.7	300.9	301.4	300.9	301.5	301.3	300.9	300.7
62	***	***	1.782	302.4	302.2	302.2	301.8	301.0	302.3	300.4	300.9	300.6	301.1	300.9	300.5	300.2
67	***	***	1.753	302.1	301.6	302.0	301.4	300.6	302.0	300.2	300.5	300.3	300.7	300.5	300.2	300.1
72	***	***	1.748	301.8	301.3	301.6	301.2	300.4	301.7	300.0	300.2	300.1	300.4	300.2	299.9	299.9
82	***	***	1.762	301.3	300.9	301.0	300.8	300.2	301.2	299.5	299.6	299.5	300.0	299.7	299.5	299.2
92	***	***	1.773	300.9	300.5	300.5	300.3	299.9	300.7	299.0	299.5	299.2	299.6	299.4	299.0	298.8
102	***	***	1.771	300.6	300.2	300.3	300.1	299.7	300.4	298.8	299.1	299.0	299.3	299.1	298.8	298.7
112	***	***	1.761	300.3	300.1	300.0	299.9	299.5	300.2	298.5	298.8	298.7	299.0	298.8	298.5	298.4
122	***	***	1.763	300.2	299.9	299.8	299.5	299.5	300.0	298.3	298.7	298.5	298.8	298.5	298.3	298.3
132	***	***	1.762	300.0	299.7	299.5	299.5	299.5	299.8	298.2	298.5	298.2	298.7	298.3	298.1	298.0
142	***	***	1.762	299.8	299.5	299.5	299.3	299.5	299.5	298.0	298.2	298.1	298.4	298.1	298.0	298.0
152	***	***	1.747	299.6	299.4	299.4	299.3	299.5	299.5	298.0	298.1	298.1	298.3	298.0	297.8	297.9

COORDINATES

I	R (M)	THETA (DEG)	Z (M)
1	0.229	00	0.152
2	0.229	00	0.000
3	0.076	00	0.152
4	0.102	00	0.076
5	0.076	00	-0.076
6	0.152	00	0.152
7	0.229	00	0.762
8	0.229	00	0.991
9	0.076	00	0.076
10	0.229	00	-0.076
11	0.152	00	0.762
12	0.229	00	0.914
13	0.229	00	0.838

UNCLASSIFIED

Table 4E — Scaling Run 107, Test Configuration 3: Three 1.52 cm Nozzles

5 C METER CHAMBER OBSTRUCTED GAS MIXING RUN 107

TIME (SEC)	PRESSURANT FOW - TOTAL P (BAR)	PRESSURANT FOW - TOTAL T (DEG K)	FILL-TANK P (BAR)	THERMOCOUPLES LOCATION I T(DEG K) 1	2	3	4	5	6	7	8	9	10	11	12	13
-5	***	***	1.041	299.6	299.5	299.5	299.3	299.0	299.5	298.0	298.2	298.0	298.5	298.1	298.1	298.0
-4	***	***	1.057	299.6	299.5	299.5	299.4	299.0	299.5	298.0	298.2	298.0	298.5	298.1	298.1	298.0
-3	***	***	1.035	299.5	299.5	299.5	299.3	299.0	299.5	298.1	298.2	298.0	298.5	298.1	298.1	298.1
-2	***	***	1.045	299.6	299.5	299.4	299.4	299.0	299.5	298.0	298.3	298.0	298.5	298.2	298.1	298.0
-1	***	***	1.037	299.5	299.5	299.5	299.4	299.0	299.5	298.0	298.2	298.0	298.5	298.1	298.1	298.0
0	6.388	291.7	1.039	299.5	299.5	299.5	299.4	299.1	299.6	298.0	298.5	298.1	298.6	298.2	298.1	298.0
1	6.160	301.8	1.099	302.5	302.4	300.7	302.2	301.7	304.0	300.4	303.6	302.0	302.6	302.1	302.0	301.3
2	5.900	288.9	1.163	307.6	309.3	308.0	308.9	306.0	309.7	304.6	307.5	305.2	306.3	305.5	305.7	305.1
3	5.555	286.2	1.255	311.0	312.1	311.9	312.1	309.1	312.5	307.8	310.1	308.0	309.5	308.4	308.9	308.4
4	5.214	285.0	1.337	311.9	313.4	312.8	312.9	310.0	313.2	309.8	311.5	310.2	311.6	310.4	310.2	310.0
5	4.923	283.5	1.406	313.3	314.1	313.5	313.9	311.9	314.1	311.1	312.4	311.0	312.5	311.3	311.5	311.4
6	4.656	282.1	1.467	313.8	314.2	314.2	313.9	312.5	314.5	311.6	312.9	311.6	312.8	311.6	312.2	312.2
7	4.465	281.1	1.521	314.3	314.5	314.8	314.3	312.8	314.8	311.5	312.6	312.0	313.1	311.8	312.3	312.1
8	4.236	280.2	1.581	314.2	315.0	314.5	314.6	312.7	314.5	312.0	312.6	312.2	313.4	312.2	312.3	312.4
9	4.015	279.0	1.617	314.1	314.8	314.0	314.3	313.0	314.2	311.6	312.4	311.9	313.4	311.9	312.2	312.3
10	3.807	277.9	1.687	313.9	314.5	313.8	314.3	312.8	313.8	311.7	312.4	311.8	313.2	311.8	312.3	312.3
11	3.617	277.3	1.745	313.8	314.3	313.7	313.8	312.6	313.6	311.3	312.2	311.5	313.1	311.5	312.0	312.1
12	3.458	285.4	1.778	313.5	313.8	313.3	313.5	312.3	313.2	311.4	311.9	311.5	312.6	311.6	311.8	311.9
13	3.392	282.8	1.817	312.9	312.8	312.6	312.7	312.1	312.8	311.2	311.3	311.0	311.7	311.3	311.3	311.5
14	3.414	283.4	1.780	312.6	312.5	312.3	312.3	312.0	312.3	310.9	310.9	310.6	311.6	310.9	310.9	311.1
15	***	***	1.798	312.3	312.4	312.0	312.0	311.8	312.1	310.4	310.4	310.3	311.5	310.5	310.3	310.5
16	***	***	1.795	312.0	312.0	311.7	311.7	311.6	311.9	310.0	310.1	310.0	311.2	310.2	310.2	310.2
17	***	***	1.790	311.9	311.7	311.5	311.2	311.3	311.6	309.7	309.9	309.8	310.8	310.0	309.9	309.8
18	***	***	1.791	311.6	311.4	311.3	311.0	311.1	311.3	309.2	309.6	309.6	310.6	309.6	309.5	309.5
19	***	***	1.789	311.2	311.1	310.9	310.7	310.9	310.9	308.9	309.4	309.4	310.2	309.5	309.4	309.2
20	***	***	1.781	311.0	310.9	310.4	310.5	310.7	310.4	308.6	309.2	309.0	310.2	309.2	309.1	308.9
21	***	***	1.774	310.8	310.5	310.0	310.3	310.4	310.2	308.2	308.9	308.8	310.0	308.8	308.8	308.5
22	***	***	1.792	310.4	310.3	309.8	310.1	310.2	309.9	308.1	308.8	308.5	309.6	308.7	308.5	308.2
27	***	***	1.784	309.4	309.4	308.9	308.8	309.3	308.8	307.1	307.9	307.4	308.9	307.7	307.5	307.0
32	***	***	1.769	308.5	308.2	308.0	307.9	308.1	307.8	306.2	307.1	306.6	307.7	306.6	306.6	306.1
37	***	***	1.788	307.8	307.3	307.2	307.0	307.1	307.3	305.5	306.4	305.8	306.7	305.9	305.9	305.3
42	***	***	1.777	307.0	306.4	306.6	306.4	306.3	306.6	304.9	305.8	305.1	305.8	305.4	305.2	304.5
47	***	***	1.755	306.6	305.9	305.9	305.9	305.9	306.0	304.3	304.9	304.5	305.2	304.7	304.5	304.0
52	***	***	1.786	305.9	305.5	305.7	305.3	305.5	305.6	303.8	304.4	304.0	304.7	304.0	303.9	303.5
57	***	***	1.760	305.7	305.2	305.5	305.1	305.2	305.4	303.4	303.8	303.6	304.5	303.8	303.5	303.2
62	***	***	1.755	305.2	304.7	304.8	304.5	304.8	304.9	303.2	303.5	303.3	304.0	303.5	303.2	303.1
67	***	***	1.773	304.8	304.4	304.4	304.0	304.5	304.5	302.9	303.2	303.0	303.5	303.2	303.0	302.6
72	***	***	1.761	304.5	304.0	304.2	303.8	304.2	304.2	302.6	303.0	302.7	303.2	303.1	302.7	302.5
82	***	***	1.759	304.0	303.6	303.8	303.5	303.8	303.8	302.2	302.5	302.3	302.8	302.6	302.3	302.1
92	***	***	1.768	303.5	303.2	303.2	303.1	303.4	303.3	301.7	302.2	302.0	302.3	302.2	301.8	301.6
102	***	***	1.765	303.3	303.0	303.0	302.7	303.1	303.1	301.5	301.8	301.7	302.1	301.8	301.5	301.3
112	***	***	1.772	303.1	302.8	302.7	302.6	302.9	302.9	301.1	301.5	301.2	301.8	301.3	301.2	300.9
122	***	***	1.730	302.9	302.5	302.4	302.4	302.7	302.7	301.0	301.2	301.0	301.5	301.1	301.0	301.0
132	***	***	1.760	302.6	302.4	302.4	302.3	302.6	302.6	300.9	301.0	300.9	301.3	301.0	300.8	300.8
142	***	***	1.760	302.5	302.3	302.3	302.2	302.6	302.4	300.7	300.9	300.8	301.2	300.8	300.6	300.7
152	***	***	1.759	302.4	302.2	302.1	302.0	302.5	302.3	300.5	300.8	300.6	301.0	300.6	300.5	300.5
162	***	***	1.738	302.3	302.0	302.0	301.8	302.5	302.1	300.4	300.6	300.6	300.9	300.5	300.3	300.5
172	***	***	1.748	302.2	301.8	301.8	301.7	302.4	302.0	300.3	300.5	300.5	300.8	300.4	300.3	300.4
182	***	***	1.739	302.0	301.8	301.8	301.7	302.4	302.0	300.3	300.4	300.4	300.7	300.3	300.2	300.4
192	***	***	1.740	302.0	301.7	301.8	301.6	302.4	301.8	300.2	300.3	300.5	300.6	300.3	300.1	300.3

I	COORDINATES R (M)	THETA (DEG)	Z (M)
1	0.229	00	0.152
2	0.229	00	0.000
3	0.076	00	0.152
4	0.102	00	0.076
5	0.076	00	-0.076
6	0.152	00	0.152
7	0.229	00	0.762
8	0.229	00	0.991
9	0.076	00	0.076
10	0.229	00	-0.076
11	0.152	00	0.762
12	0.229	00	0.914
13	0.229	00	0.838

Table 4F — Scaling Run 109, Test Configuration 3: Three 1.52 cm Nozzles

5 C METER CHAMBER OBSTRUCTED GAS MIXING RUN 109

TIME (SEC)	PRESSURANT FOW - TOTAL, P (BAR)	T (DEG K)	FILL-TANK P (BAR)	THERMOCOUPLES LOCATION I T(DEG K) 1	2	3	4	5	6	7	8	9	10	11	12	13
-5	***	***	1.055	301.2	301.2	301.2	301.0	300.8	301.2	299.6	300.0	299.6	300.2	300.0	299.8	299.7
-4	***	***	1.033	301.3	301.2	301.2	301.0	300.8	301.2	299.7	300.0	299.5	300.2	299.9	299.8	299.9
-3	***	***	1.067	301.3	301.2	301.2	301.0	300.8	301.2	299.6	300.0	299.6	300.2	300.0	299.7	299.6
-2	***	***	1.046	301.2	301.2	301.2	301.0	300.9	301.2	299.7	300.0	299.6	300.2	299.9	299.8	299.7
-1	***	***	1.048	301.2	301.2	301.2	301.0	300.8	301.2	299.6	300.0	299.5	300.3	299.9	299.7	299.7
0	6.398	293.2	1.048	301.2	301.2	301.2	301.0	300.8	301.3	299.6	300.0	299.6	300.2	299.9	299.8	299.7
1	6.269	304.5	1.066	303.8	303.9	302.2	303.5	303.3	305.3	300.5	304.0	302.4	302.9	302.4	302.0	301.3
2	6.008	289.9	1.143	307.6	309.1	307.8	308.7	306.1	309.7	304.9	308.1	305.7	307.0	306.2	306.3	305.7
3	5.654	286.7	1.226	311.6	312.9	312.4	312.7	309.8	313.4	308.7	311.0	309.1	310.5	309.5	309.7	309.4
4	5.307	284.6	1.336	313.6	314.9	315.2	314.9	312.1	315.1	311.2	313.0	311.2	312.8	311.7	312.0	311.7
5	5.005	283.7	1.396	314.6	315.3	315.5	315.3	313.1	315.6	312.2	313.7	312.4	313.8	312.5	313.0	312.9
6	4.723	282.2	1.469	315.4	316.0	315.8	315.9	314.3	315.9	313.1	314.3	313.1	314.5	312.9	313.6	313.6
7	4.472	280.8	1.525	315.4	315.6	315.6	315.4	314.5	315.7	313.2	314.3	313.4	314.6	313.5	313.9	313.8
8	4.224	279.7	1.584	315.7	315.9	315.8	315.8	314.7	316.0	312.9	314.1	313.4	314.6	313.5	313.8	313.8
9	4.074	278.5	1.629	315.3	315.9	315.7	315.5	314.0	315.3	313.2	313.9	313.4	314.6	313.6	313.7	313.6
10	3.861	277.5	1.688	315.2	315.8	315.5	315.3	314.3	315.3	313.0	314.1	313.2	314.7	313.5	313.8	313.6
11	3.663	276.9	1.743	231.2	230.6	315.2	231.1	232.1	231.1	313.1	313.8	313.2	314.5	313.6	311.8	313.6
12	3.560	286.0	1.756	314.7	315.2	314.9	314.9	313.8	314.6	312.8	313.7	313.3	314.3	313.5	313.5	313.6
13	3.438	284.1	1.795	314.7	315.2	314.7	314.7	313.3	314.5	312.7	313.4	313.1	314.0	313.0	313.1	313.0
14	3.413	284.5	1.811	314.5	314.9	314.4	314.4	313.1	314.2	312.0	312.5	312.4	313.4	312.4	312.6	312.3
15	***	***	1.799	314.2	314.5	314.1	314.1	313.0	313.9	311.7	312.3	312.2	313.2	312.1	312.2	312.0
16	***	***	1.793	314.0	314.2	313.8	313.8	312.8	313.7	311.2	311.6	311.9	312.9	311.8	311.7	311.6
17	***	***	1.791	313.7	313.9	313.5	313.5	312.6	313.4	310.8	311.4	311.6	312.5	311.5	311.3	311.1
18	***	***	1.810	313.5	313.5	313.2	313.2	312.5	313.1	310.5	311.1	311.3	312.3	311.2	311.1	310.8
19	***	***	1.773	313.3	313.2	312.8	312.8	312.3	312.8	310.3	311.0	311.1	312.1	310.9	310.9	310.8
20	***	***	1.797	313.0	312.9	312.5	312.5	312.1	312.5	309.9	310.8	310.9	311.8	310.4	310.5	310.3
21	***	***	1.797	312.8	312.6	312.2	312.2	311.9	312.3	309.5	310.7	310.7	311.6	310.2	310.2	309.8
22	***	***	1.785	312.5	312.2	311.9	311.9	311.8	312.0	309.4	310.5	310.3	311.3	310.1	310.1	309.6
27	***	***	1.782	311.3	311.0	310.8	310.8	310.8	310.9	308.8	309.8	309.3	310.3	309.4	309.3	308.8
32	***	***	1.779	310.5	309.9	310.2	309.8	309.9	310.0	308.0	309.2	308.4	309.3	308.7	308.6	308.0
37	***	***	1.770	309.5	308.9	309.2	308.7	309.0	308.9	307.0	308.2	307.6	308.2	307.7	307.7	306.9

I	COORDINATES R (M)	THETA (DEG)	Z (M)
1	0.229	00	0.152
2	0.229	00	0.000
3	0.076	00	0.152
4	0.102	00	0.076
5	0.076	00	-0.076
6	0.152	00	0.152
7	0.229	00	0.762
8	0.229	00	0.991
9	0.076	00	0.076
10	0.229	00	-0.076
11	0.152	-00	0.762
12	0.229	00	0.914
13	0.229	00	0.638

(Table continues)

CLASSIFIED

Table 4F — Scaling Run 109, Test Configuration 3: Three 1.52 cm Nozzles (Continued)

5 C METER CHAMBER OBSTRUCTED GAS MIXING RUN 107

TIME (SEC)	PRESSURANT FOW - TOTAL P (BAR)	T (DEG K)	FILL-TANK P (BAR)	THERMOCOUPLES LOCATION I T(DEG K) 1	2	3	4	5	6	7	8	9	10	11	12	13
42	***	***	1.768	308.7	308.1	308.4	307.8	308.1	308.4	306.5	307.2	306.6	307.2	306.9	306.7	306.3
47	***	***	1.784	308.1	307.5	307.9	307.4	307.7	307.8	305.8	306.6	305.9	306.8	306.3	306.1	305.6
52	***	***	1.782	307.5	307.0	307.5	306.7	307.0	307.4	305.2	306.1	305.4	306.3	305.8	305.5	305.1
57	***	***	1.757	307.1	306.6	306.8	306.4	306.6	306.9	304.8	305.5	305.0	305.9	305.3	305.0	304.7
62	***	***	1.789	306.7	306.2	306.4	306.1	306.4	306.6	304.5	305.1	304.8	305.5	305.0	304.6	304.4
67	***	***	1.761	306.2	306.0	306.1	305.7	305.9	306.2	304.4	304.8	304.5	305.2	304.7	304.5	304.2
72	***	***	1.775	305.9	305.8	305.9	305.5	305.8	305.9	304.0	304.6	304.0	304.9	304.5	304.4	303.9
82	***	***	1.775	305.6	305.3	305.3	305.1	305.3	305.4	303.8	304.1	303.8	304.5	304.0	303.8	303.7
92	***	***	1.785	305.2	305.0	305.0	304.8	305.0	305.1	303.4	303.8	303.6	304.0	303.8	303.5	303.3
102	***	***	1.768	304.9	304.6	304.7	304.5	304.8	304.8	303.1	303.5	303.1	303.8	303.4	303.1	303.0
112	***	***	1.766	304.6	304.5	304.4	304.3	304.5	304.5	302.9	303.1	303.0	303.5	303.1	302.9	302.8
122	***	***	1.769	304.4	304.2	304.2	304.1	304.5	304.4	302.7	303.0	302.7	303.2	303.0	302.7	302.7
132	***	***	1.767	304.1	304.0	304.0	303.9	304.2	304.0	302.4	302.8	302.5	303.1	302.7	302.5	302.5
142	***	***	1.772	304.0	303.8	303.9	303.8	304.0	303.9	302.3	302.6	302.4	302.9	302.5	302.3	302.3
152	***	***	1.757	303.9	303.8	303.8	303.6	303.9	303.8	302.2	302.4	302.3	302.7	302.4	302.2	302.2
162	***	***	1.758	303.8	303.6	303.7	303.5	303.8	303.8	302.1	302.3	302.2	302.5	302.3	302.1	302.1
172	***	***	1.776	303.7	303.5	303.6	303.4	303.6	303.6	302.0	302.2	302.2	302.4	302.2	302.0	302.0
182	***	***	1.768	303.6	303.4	303.4	303.3	303.6	303.5	301.9	302.1	302.2	302.4	302.2	301.8	301.9
192	***	***	1.763	303.5	303.4	303.4	303.3	303.5	303.5	301.9	302.0	302.2	302.3	302.0	301.8	301.9
202	***	***	1.760	303.5	303.3	303.3	303.1	303.5	303.5	301.8	302.0	302.1	302.2	302.0	301.7	301.8
212	***	***	1.764	303.4	303.2	303.3	303.1	303.4	303.4	301.8	301.9	302.1	302.2	302.0	301.7	301.8
222	***	***	1.763	303.3	303.2	303.3	303.1	303.5	303.3	301.7	301.8	302.0	302.1	302.0	301.7	301.7
232	***	***	1.780	303.3	303.1	303.1	303.1	303.6	303.3	301.7	301.8	302.0	302.1	302.0	301.6	301.7
242	***	***	1.771	303.3	303.1	303.1	303.1	303.5	303.3	301.7	301.8	302.0	302.0	301.8	301.5	301.6
252	***	***	1.779	303.3	303.1	303.1	303.1	303.5	303.3	301.7	301.7	302.0	302.0	301.9	301.5	301.6
262	***	***	1.761	303.2	303.1	303.1	303.0	303.5	303.3	301.7	301.7	302.0	302.0	301.9	301.5	301.6
272	***	***	1.765	303.1	303.1	303.1	302.9	303.6	303.1	301.6	301.6	301.9	302.0	301.8	301.5	301.6
282	***	***	1.766	303.1	303.1	303.1	302.9	303.6	303.1	301.6	301.6	301.9	302.0	301.8	301.5	301.5
292	***	***	1.760	303.1	303.1	303.0	302.9	303.6	303.1	301.5	301.6	301.8	301.9	301.7	301.5	301.6
302	***	***	1.766	303.1	303.1	302.9	302.9	303.5	303.1	301.5	301.5	301.8	301.8	301.7	301.4	301.5

Table 4G — Scaling Run 113, Test Configuration 3: Three 1.52 cm Nozzles

5 C METER CHAMBER OBSTRUCTED GAS MIXING RUN 113

TIME (SEC)	PRESSURANT FOW - TOTAL, P (BAR)	T (DEG K)	FILL-TANK P (BAR)	THERMOCOUPLES LOCATION I T(DEG K) 1	2	3	4	5	6	7	8	9	10	11	12	13
-5	***	***	1.038	300.1	300.0	299.9	300.0	299.5	300.1	298.4	298.7	298.6	298.9	298.5	298.2	298.5
-4	***	***	1.059	300.2	300.0	299.9	300.0	299.5	300 0	298.3	298.8	298.5	299.0	298.5	298.2	298.3
-3	***	***	1.078	300.1	300.0	299.9	300.0	299.5	300.0	298 3	298.7	298 6	299.1	298.7	298 2	298.3
-2	***	***	1.047	300.1	300.0	299.9	300.0	299.5	300.1	298.4	298.7	298.5	299.1	298.6	298.2	298.5
-1	***	***	1.060	300.2	300.0	299.9	300.0	299.5	300.0	298.4	298.8	298.5	299.0	298.6	298.2	299.6
0	6.386	291.4	1.083	300.2	300.0	299.9	300.0	299.5	300.0	298.3	298.7	298.4	299.0	298.7	298.2	298.2
1	6.314	291.5	1.074	300.1	300.0	299.9	300.0	299.5	300.1	299.1	301.0	300.2	301.8	300.0	299.8	299.5
2	5.980	299.0	1.151	305.3	304.5	301.4	304.5	303.5	306.1	304 2	308.5	305.2	306.6	305.2	305.6	304 9
3	5.722	289.9	1.209	310.6	310.6	305.2	311.0	308.7	311.3	307.0	309.8	307.4	309.1	307.3	308.2	307.8
4	5.466	288.4	1.312	312.4	312.3	308.0	312.8	310.9	313.0	309.9	311.6	310.0	312.2	310.0	310.5	310.3
5	5.057	286.5	1.401	314.0	314.1	310.5	314.2	312.4	314.3	312.0	312.9	311.5	312.9	311.1	311.6	311.5
6	4.792	285.2	1.456	314.9	315.0	312.3	315.1	313.8	315.2	311.7	313.4	312.3	315.9	311.9	312.5	312.1
7	4.534	284.1	1.523	314.7	315.0	313.3	315.1	314.2	315.1	317.9	313.4	312.9	314.0	312.7	312.8	312.8
8	4.360	283.0	1.565	314.8	315.3	313.9	315 2	314.0	314.9	312.6	313.6	312 8	313.9	312.4	313.0	312.9
9	4.135	282.0	1 626	314.7	315.3	314.1	315.2	314.1	315.0	312.7	313.4	312.8	314.1	312.8	313.1	313.2
10	3.905	281.4	1.693	315.1	314.9	314.4	315.0	314.1	315.2	312.2	313.3	312.6	313.8	312.5	313.1	312.8
11	3.718	280.7	1.742	315.1	314.9	314.5	314.9	314.2	314.9	312.0	314.3	312.4	313.8	312.7	312.6	312.5
12	3.611	289.9	1.794	314.8	314.7	314.5	314.8	313.9	314.7	317.3	312.6	312.3	313.4	312.2	312.2	312.3
13	3.428	288.8	1.818	314.5	314.3	314.4	314.2	313.7	314.5	316.0	312.3	311.8	313.0	311.7	311.9	311.8
14	3.461	286.7	1.841	314.1	314.0	314.1	313.9	313.4	314.0	311.0	311.6	311.3	316.7	311.2	311.2	311.1
15	***	***	1.815	313.7	313.5	313.9	313.5	313.0	313.5	310.7	311.1	311.6	312.2	311.0	310.8	314.2
16	***	***	1.816	313.3	312.9	313.6	313.0	312.6	312.8	310.1	311.4	310.5	311.8	310.5	310.6	310.7
17	***	***	1.821	313.1	312.4	313.3	312.7	312.3	312.5	309 8	310.6	313.8	311.4	310.2	309 7	310.1
18	***	***	1.816	312.7	312.2	313.0	312.3	312.1	312.3	309.5	309.9	309.9	311.2	309.7	309.3	309.7
19	***	***	1.793	312.3	311.9	312.6	312.2	311.9	312.0	309.1	309.5	309.5	310.8	309.5	308.8	309.4
20	***	***	1.826	312.3	311.7	312.3	312.0	311.7	311.9	308.8	309.5	309.3	310.6	309.4	308.6	308.9
21	***	***	1.809	312.1	311.4	312.1	311.7	311.5	311.5	308.5	309.4	309.0	310.3	310.2	308.4	308.8
22	***	***	1.800	311.7	311.0	311.6	311.4	311.1	311.0	308.3	315.6	308.8	310.0	308.7	308 1	308.7
27	***	***	1.815	310.8	309.9	310.5	310.5	310.1	310.1	307.2	308.1	307 6	308.7	307.8	306.6	307.3
32	***	***	1.821	310.1	308.8	309.4	309.6	309.1	308.9	306.6	306.6	306.8	307.2	307.1	305.2	306.3
37	***	***	1.811	308.8	307.5	308.2	308.4	308.3	307.9	305.9	306.2	306.1	306.1	306.4	304.6	305.5
42	***	***	1.814	307.6	306.6	307.1	307.4	307.3	306.7	305.1	305.6	307.0	306.1	305.9	304.5	306.2
47	***	***	1.811	307.0	306.0	306.5	306.7	306.6	306.4	304.9	306.1	304.9	304.6	305.2	303.8	304.5
52	***	***	1.787	306.6	305.8	305.9	306.2	306.2	305.9	304.2	304.2	304.5	305.7	304.7	303.2	303.9
57	***	***	1.794	306.1	305.1	305.4	305.8	305.7	305.3	303.8	303.8	304.0	303.9	304.2	303.1	303.6
62	***	***	1.800	305.7	304.8	305.1	305.4	305.3	305.1	303.5	303.5	304.0	303.7	304.6	317.7	305.7
67	***	***	1.810	305.3	304.5	304.8	305.1	305.0	305.0	303.1	303.2	305.6	303.3	304.8	302.5	302.7
72	***	***	1.807	305.0	304.2	304.5	304.5	304.6	304.5	302.9	303.8	303.1	303.0	303.5	302.3	302.9
82	***	***	1.781	304.5	303.9	304.0	304.2	304.2	304.1	302.5	302.9	302.9	306.0	304.4	302.1	302.5
92	***	***	1.793	304.0	303.7	303.7	303.8	303.8	303.8	302.2	302.4	302.9	302.8	302.7	301.8	302.3
102	***	***	1.779	303.8	303.3	303.4	303.5	303.5	303.5	301.9	302.1	302.2	302.2	302.3	301.5	301.9
112	***	***	1.772	303.5	303.1	303.1	303.1	303.2	303.2	301.5	301.8	301.8	302.0	301.8	301.9	301.6
122	***	***	1.765	303.3	303.0	303.1	303.1	303 1	303.1	301 3	301.7	301.7	301 8	301.6	301.1	301 4
132	***	***	1.791	303.1	302.9	303.0	302.9	303.1	303.0	301.1	301.3	301.4	301.7	301.5	300.9	301.0
142	***	***	1.797	303.0	302.7	302.9	302.7	303.1	302.9	300.9	301.3	301.2	301.6	301.4	300.9	300.9
152	***	***	1.784	302.9	302.7	302.8	302.6	303.1	302.9	300.9	301.0	301.2	301.5	301.3	300.9	300.9
162	***	***	1.778	302.9	302.6	302.7	302.6	303.1	302.8	301.3	301.0	301.2	301.5	300.9	300.8	300.8
172	***	***	1.786	302.7	302.6	302.7	302.5	303.1	302.7	301.5	302.0	302.4	302.1	301.0	300.6	300.8
182	***	***	1.792	302.7	302.5	302.6	302.4	303.0	302.7	300.6	300.8	301.0	301.4	300.9	300.6	300.6
192	***	***	1.794	302.7	302.4	302.6	302.3	303.0	302.6	303.4	300.8	300.9	301.3	300.8	300.6	300.6
202	***	***	1.784	302.6	302.4	302.5	302.2	302.9	302.6	300.6	300.8	300.9	301.3	300.8	300.6	300.6
212	***	***	1.793	302.5	302.3	302.5	302.2	302.7	302.6	300.6	301.7	302.1	301.3	300.8	300.4	300.5
222	***	***	1.769	302.5	302.3	302.4	302.0	302.9	302.6	300.6	300.6	300.9	301.7	300.6	300.4	300.5
232	***	***	1.782	302.4	302.3	302.4	302.0	302.8	302.5	300.5	300.6	300.9	301.2	300.7	300.4	300.5
242	***	***	1.779	302.4	302.3	302.4	302.0	302.6	302.5	300.5	300.6	300.9	301.2	300.8	300.4	300.5
252	***	***	1.781	302.3	302.3	302.4	302.1	302.5	302.5	301.4	300.5	300.8	301.3	301.3	300.7	300.4
262	***	***	1.769	302.3	302.3	302.4	302.1	302.4	302.5	300.4	302.9	301.3	301.2	301.4	302.3	300.6

COORDINATES

I	R (M)	THETA (DEG)	Z (M)
1	0.229	00	0.152
2	0.229	00	0.000
3	0.076	00	0 152
4	0.102	00	0.076
5	0.076	00	-0.076
6	0.152	00	0.152
7	0.229	00	0.762
8	0.229	00	0.991
9	0.076	00	0.076
10	0.229	00	-0.076
11	0.152	00	0.762
12	0.229	00	0.914
13	0.229	00	0.838

UNCLASSIFIED

Table 4H — Scaling Run 114, Test Configuration 3: Three 1.52 cm Nozzles

5 C METER CHAMBER OBSTRUCTED GAS MIXING RUN 114

TIME (SEC)	PRESSURANT FOW - TOTAL, P (BAR)	T (DEG K)	FILL-TANK P (BAR)	THERMOCOUPLES LOCATION I T(DEG K) 1	2	3	4	5	6	7	8	9	10	11	12	13
-5	***	***	1.072	300.9	300.8	300.7	300.8	300.3	300.8	299.1	299.5	299.2	299.7	299.3	299.0	299.1
-4	***	***	1.062	300.9	300.8	300.6	300.8	300.2	300.9	299.1	299.5	299.2	299.7	299.3	299.0	299.1
-3	***	***	1.048	300.9	300.8	300.7	300.8	300.3	300.8	299.1	299.5	299.3	299.7	299.3	299.1	299.5
-2	***	***	1.070	300.9	300.8	300.7	300.8	300.2	300 9	299.1	299.5	299.2	299.7	299.3	299.0	299.1
-1	***	***	1.060	300.9	300.8	300.7	300.8	300.2	300.8	299.0	299.5	299.2	299.7	299.3	299.0	299.1
0	6.458	292.3	1.049	300.9	300.8	300.6	300.8	300.2	300.9	299.1	299.5	299.2	299.7	299.3	298.9	300.0
1	6.333	292.3	1.070	300.9	300.8	300.7	300.8	300.2	300.8	299.5	301.5	300.5	301.0	300.4	300.0	299.9
2	5.990	299.5	1.163	305.4	304.5	301.9	304.5	303.9	306.0	304.3	307.6	305.2	306.2	305.3	305.8	305.1
3	5.760	290.5	1.221	311.0	310.8	305.6	311.3	309.0	311.5	307.1	310.8	308.0	309.6	307.8	308.9	308.2
4	5.417	288.8	1.306	313.0	313.1	308.4	313.8	311.3	313.7	309.8	312.3	310.3	311.9	310.2	311.1	310.5
5	5.114	287.0	1.365	314.4	314.8	311.0	314.9	313.3	314.7	311.6	313.3	312.0	313.4	312.2	312.3	312.0
6	4.818	285.4	1.452	315.6	315.7	312.8	315.9	314.5	315.7	312.3	314.0	312.8	314.3	312.7	313.4	312.9
7	4.550	284.6	1.512	315.6	316.1	313.8	316.0	314.2	315.7	313.0	314.2	313.3	314.6	313.1	313.7	313.7
8	4.388	283.5	1.546	315.7	316.0	314.4	316.0	314.3	315.7	312.9	314.2	313.8	314.7	313.4	313.8	313.6
9	4.159	282.4	1.608	315.6	315.7	314.7	315.6	314.0	315.5	313.1	314.2	313.6	314.5	313.3	313.8	313.8
10	3.942	281.7	1.680	315.2	315.6	314.9	315.5	314.3	315.3	313.2	314.0	313.6	314.5	313.4	313.8	313.7
11	3.773	280.9	1.740	315.4	315.5	315.1	315.6	314.6	315.3	313.6	315.5	314.1	314.7	314.9	313.8	313.8
12	3.545	289.9	1.794	315.1	315.4	314.8	315.3	314.2	314.8	312.9	313.4	313.4	314.2	313.1	313.1	313.1
13	3.441	289.3	1.799	314.7	315.4	314.7	315.2	313.3	314.6	312.5	313.3	313.1	314.2	312.9	312.9	313.1
14	3.401	285.7	1.829	314.7	315.0	314.8	314.9	313.9	314.7	312.3	312.8	312.7	313.7	312.5	312.5	312.5
15	***	***	1.838	314.4	314.4	314.6	314.4	313.7	314.0	311.9	312.7	312.3	313.1	312.0	312.0	312.0
16	***	***	1.823	313.8	313.8	314.2	313.8	313.3	313.5	311.6	313.3	312.3	313.0	312.3	311.7	311.8
17	***	***	1.811	313.5	313.6	313.9	313.8	313.1	313.1	311.3	311.6	311.6	312.3	311.4	311.0	311.4
18	***	***	1.816	313.1	313.2	313.5	313.3	312.9	312.7	311.3	313.5	311.7	312.4	312.9	312.9	315.5
19	***	***	1.823	312.8	312.8	313.2	313.0	312.7	312.4	310.6	310.9	311.0	311.6	310.9	310.2	310.5
20	***	***	1.814	312.5	312.4	312.9	312.8	312.5	312.1	310.2	310.7	310.8	311.1	310.7	310.0	310.2
21	***	***	1.814	312.2	312.2	312.5	312.3	312.4	311.8	310.0	310.3	310.4	310.9	310.5	309.5	309.9
22	***	***	1.819	312.0	311.7	312.1	312.2	312.2	311.3	309.8	310.1	310.0	310.6	310.2	309.1	309.5
27	***	***	1.798	311.0	310.3	311.1	311.0	311.4	310.5	308.9	308.9	308.8	309.4	309.1	308.0	308.7
32	***	***	1.798	310.2	309.3	310.1	310.2	310.2	309.8	307.8	308.1	307.7	308.1	308.1	306.9	307.8
37	***	***	1.817	309.5	308.2	309.0	309.4	309.5	308.8	306.8	307.4	306.9	306.8	307.3	306.1	306.8
42	***	***	1.789	308.7	307.5	308.2	308.6	308.7	308.0	306.0	306.6	306.6	306.3	306.6	305.3	306.0
47	***	***	1.779	308.1	307.0	307.6	308.1	308.1	307.5	305.7	306.1	305.9	305.9	306.1	304.9	305.5
52	***	***	1.784	307.5	306.6	307.0	307.5	307.5	306.9	305.2	305.7	305.4	305.7	305.7	304.6	305.2
57	***	***	1.776	306.9	306.2	306.4	306.6	306.9	306.6	304.8	305.2	305.1	305.2	305.2	304.2	304.9
62	***	***	1.790	306.4	305.9	306.0	306.4	306.4	306.0	304.4	304.8	304.8	304.5	304.8	303.8	304.3
67	***	***	1.785	306.1	305.5	305.8	305.9	305.9	305.8	304.1	304.3	306.7	304.5	310.0	306.7	304.2
72	***	***	1.809	305.9	305.2	305.4	305.7	305.7	305.4	303.6	303.8	304.0	303.9	304.1	303.0	303.6
82	***	***	1.789	305.3	304.6	304.9	305.1	305.1	304.9	303.1	303.3	303.6	303.4	303.6	302.7	303.1
92	***	***	1.778	304.9	304.2	304.6	304.5	304.8	304.5	304.4	307.3	303.3	307.9	304.5	304.5	305.1
102	***	***	1.774	304.5	304.0	304.4	304.3	304.5	304.2	303.5	305.2	304.9	305.2	303.9	303.0	303.8
112	***	***	1.823	304.2	303.8	303.9	304.0	304.3	304.0	302.6	309.7	309.2	311.3	307.6	310.2	302.9
122	***	***	1.788	304.0	303.6	303.8	303.8	303.9	303.9	302.2	302.4	302.4	302.5	302.5	302.0	302.2
132	***	***	1.777	303.9	303.5	303.7	303.6	303.8	303.8	302.0	302.4	302.3	302.4	302.2	301.8	302.0
142	***	***	1.787	303.8	303.5	303.6	303.5	303.6	303.6	301.8	302.1	302.0	302.3	302.0	301.7	301.8
152	***	***	1.777	303.6	303.3	303.5	303.4	303.5	303.6	301.7	302.0	302.0	302.2	301.9	301.5	301.7
162	***	***	1.786	303.5	303.3	303.5	303.3	303.8	303.5	301.6	301.8	301.9	302.2	301.7	301.5	301.6
172	***	***	1.803	303.5	303.2	303.4	303.2	303.6	303.5	301.8	301.8	301.8	302.1	301.8	301.3	301.4
182	***	***	1.833	303.4	303.1	303.4	303.1	303.5	303.5	308.5	306.4	302.8	303.7	302.1	303.5	303.8
192	***	***	1.789	303.3	303.1	303.3	303.1	303.5	303.4	301.4	303.1	304.4	302.0	301.5	301.3	301.4
202	***	***	1.785	303.3	303.1	303.3	303.0	303.4	303.4	301.3	301.5	301.7	302.0	301.5	301.3	301.3
212	***	***	1.787	303.2	303.0	303.2	302.9	303.3	303.3	301.3	301.5	301.7	302.0	301.5	301.3	301.3
222	***	***	1.778	303.2	303.0	303.2	302.9	303.3	303.3	301.3	301.5	301.7	301.8	301.5	301.2	301.4
232	***	***	1.797	303.1	303.1	303.1	302.7	303.1	303.2	301.2	301.5	301.7	301.8	301.5	301.2	301.2

COORDINATES

I	R (M)	THETA (DEG)	Z (M)
1	0.229	00	0.152
2	0.229	00	0.000
3	0.076	00	0.152
4	0.102	00	0.076
5	0.076	00	-0.076
6	0.152	00	0.152
7	0.229	00	0.762
8	0.229	00	0.991
9	0.076	00	0.076
10	0.229	00	-0.076
11	0.152	00	0.762
12	0.229	00	0.914
13	0.229	00	0.838

Table 4I — Scaling Run 115, Test Configuration 3: Three 1.52 cm Nozzles

5 C METER CHAMBER OBSTRUCTED GAS MIXING RUN 115

TIME (SEC)	PRESSURANT FOW - TOTAL, P (BAR)	T (DEG K)	FILL-TANK P (BAR)	THERMOCOUPLES LOCATION I T(DEG K) 1	2	3	4	5	6	7	8	9	10	11	12	13
-5	***	***	1.039	301.7	301.5	301.5	301.5	301.0	301.6	300.0	300.3	300.2	300.9	300.8	300.2	300.2
-4	***	***	1.060	301.7	301.5	301.4	301.6	301.0	301.7	301.6	301.5	300.4	301.4	301.4	302.0	301.2
-3	***	***	1.045	301.7	301.5	301.4	301.5	301.0	301.6	300.0	300.4	300.1	300.5	300.2	299.9	300.0
-2	***	***	1.052	301.7	301.5	301.5	301.5	301.0	301.6	300.0	301.7	300.2	300.6	300.5	300.2	300.0
-1	***	***	1.071	301.7	301.5	301.5	301.5	301.0	301.6	300.0	300.3	300.0	300.6	300.3	299.9	299.9
0	6.417	293.1	1.035	301.7	301.5	301.4	301.5	301.0	301.7	300.0	300.3	300.0	300.8	300.3	300.1	307.4
1	6.317	299.5	1.070	303.4	302.8	301.7	302.5	302.4	303.8	300.8	304.1	302.4	303.0	301.9	302.0	301.9
2	5.994	293.7	1.157	309.7	309.1	304.3	309.5	307.5	310.4	306.3	311.1	306.7	308.3	307.0	307.7	306.8
3	5.754	290.9	1.255	312.4	312.2	307.1	312.9	310.4	313.1	309.7	312.4	309.9	311.5	311.0	310.9	310.3
4	5.273	289.3	1.352	314.6	313.9	309.6	314.3	312.6	315.2	311.9	314.1	312.3	313.8	312.2	313.1	314.8
5	5.340	287.5	1.376	315.4	315.6	312.0	315.6	314.0	315.8	312.9	317.1	313.3	314.7	314.5	315.6	318.8
6	4.798	285.9	1.449	315.9	316.6	313.6	316.6	315.2	316.2	313.6	314.9	314.1	319.3	314.2	315.7	317.5
7	4.517	285.2	1.500	316.0	316.5	314.5	316.6	315.2	316.3	313.8	315.5	314.2	316.4	314.1	314.2	314.1
8	4.383	283.9	1.577	316.4	316.8	315.3	316.7	315.6	316.6	316.8	315.6	315.2	316.3	317.5	314.9	315.4
9	4.051	282.8	1.630	316.1	316.8	315.6	316.7	315.8	316.4	313.9	314.9	314.7	315.7	314.2	314.5	314.5
10	3.942	282.2	1.661	315.8	316.6	315.7	316.4	315.2	315.9	314.1	316.0	315.1	315.6	314.2	314.5	314.6
11	3.768	281.3	1.720	316.4	316.3	315.7	316.0	314.9	315.7	314.0	315.5	314.2	315.2	314.9	315.8	315.5
12	3.730	290.2	1.796	316.0	316.1	315.6	316.0	314.9	315.9	314.6	318.0	316.6	316.6	314.2	314.2	317.5
13	3.427	289.7	1.836	315.5	315.9	315.5	315.7	314.7	315.3	314.2	318.6	314.1	315.8	316.5	315.1	315.1
14	3.387	286.9	1.841	314.8	315.4	315.2	315.2	314.3	314.7	313.4	313.3	313.4	314.5	313.0	312.9	317.1
15	***	***	1.822	314.4	314.8	314.9	314.6	314.3	314.4	315.8	312.4	312.3	313.8	312.7	312.4	312.6
16	***	***	1.816	314.2	314.4	314.5	314.2	314.0	313.9	312.0	312.5	314.5	315.5	315.0	312.9	313.3
17	***	***	1.806	313.9	314.1	314.5	314.1	313.8	313.8	311.7	311.7	311.7	313.0	311.9	311.5	311.9
18	***	***	1.809	313.7	313.7	314.0	313.8	313.5	313.4	311.5	311.7	314.8	314.0	313.0	313.6	311.6
19	***	***	1.820	313.4	313.3	313.7	313.4	313.3	313.1	311.0	311.4	311.5	313.4	311.3	310.9	311.4
20	***	***	1.793	313.2	313.0	313.5	313.3	313.1	312.8	311.7	311.4	311.1	311.9	311.2	310.9	318.8
21	***	***	1.817	313.0	312.8	313.2	313.0	312.9	312.4	315.2	312.1	311.2	311.8	316.8	310.5	313.4
22	***	***	1.802	312.7	312.4	312.8	312.6	312.7	312.1	310.6	310.9	310.5	318.2	310.7	309.8	310.5
27	***	***	1.800	311.7	311.4	311.4	311.9	312.0	310.9	308.9	309.5	309.3	310.1	309.5	308.4	309.1
32	***	***	1.835	310.6	309.8	310.2	310.6	310.7	309.7	308.3	308.9	308.9	312.5	308.8	307.6	311.4
37	***	***	1.796	309.8	308.9	309.4	309.8	309.8	308.9	307.6	308.3	308.0	307.4	308.2	306.8	307.9
42	***	***	1.806	309.0	308.1	308.6	309.1	309.2	308.2	307.1	307.6	307.5	309.8	307.8	306.4	311.9
47	***	***	1.788	308.4	307.6	308.1	308.2	308.7	307.8	306.6	307.5	307.2	306.9	307.6	306.6	306.6
52	***	***	1.785	308.0	307.3	307.7	308.0	308.3	307.4	313.9	306.4	308.1	307.6	307.5	309.4	306.5
57	***	***	1.784	307.5	306.6	307.1	307.3	307.6	307.0	306.2	305.5	305.8	305.3	306.1	304.7	306.7
62	***	***	1.806	307.0	306.4	306.7	306.8	307.1	306.6	310.2	309.6	310.9	310.2	311.2	309.8	311.6
67	***	***	1.799	306.6	305.9	306.4	306.4	306.8	306.3	309.0	305.9	307.7	307.3	309.5	305.3	311.8
72	***	***	1.788	306.4	305.8	306.2	306.1	306.4	306.1	305.0	306.4	305.7	307.8	306.9	305.1	305.8
82	***	***	1.787	305.9	305.3	305.7	305.7	305.9	305.7	304.2	307.7	305.0	308.2	307.1	304.2	305.8
92	***	***	1.777	305.5	305.1	305.2	305.3	305.5	305.2	303.8	304.0	304.0	303.9	304.1	303.4	303.7
102	***	***	1.792	305.2	304.8	305.0	305.0	305.2	305.0	303.5	303.9	303.8	303.7	303.8	303.2	303.9
112	***	***	1.777	304.9	304.5	304.8	304.7	305.0	304.8	307.3	303.7	303.5	303.4	303.6	303.0	303.2
122	***	***	1.777	304.7	304.5	304.6	304.5	304.7	304.6	303.1	306.4	303.3	303.6	304.0	305.3	308.4
132	***	***	1.791	304.6	304.4	304.5	304.4	304.6	304.5	303.0	303.5	303.2	303.7	303.3	303.0	303.0
142	***	***	1.790	304.5	304.2	304.4	304.2	304.6	304.4	302.7	303.0	303.0	303.1	303.3	304.9	302.6
152	***	***	1.764	304.4	304.1	304.3	304.1	304.5	304.3	302.6	302.8	302.9	303.1	302.7	302.4	302.7
162	***	***	1.788	304.3	304.0	304.2	304.0	304.5	304.2	302.4	302.7	302.7	303.0	302.7	302.4	302.4
172	***	***	1.801	304.2	303.9	304.1	303.9	304.2	304.2	302.4	302.6	302.6	302.9	302.7	302.5	302.4
182	***	***	1.794	304.1	303.9	304.1	303.9	304.2	304.1	303.0	303.9	303.0	304.6	303.2	303.3	303.9
192	***	***	1.775	304.0	303.9	304.0	303.8	304.1	304.0	302.3	302.4	302.5	302.7	302.4	302.2	302.3
202	***	***	1.789	304.0	303.8	303.9	303.8	304.0	304.0	302.5	302.7	302.8	304.8	306.8	305.4	303.5
212	***	***	1.783	303.9	303.8	303.9	303.8	303.9	304.0	302.2	302.4	302.8	305.5	305.4	302.1	302.3
222	***	***	1.779	303.9	303.8	303.9	303.8	303.8	304.0	302.2	302.3	302.3	302.6	302.4	302.1	302.3
232	***	***	1.804	303.9	303.8	303.8	303.8	303.8	303.9	302.2	302.3	302.4	302.6	302.4	302.1	302.1
242	***	***	1.787	303.9	303.8	303.8	303.6	303.9	303.9	302.4	302.3	302.6	302.7	302.4	302.3	302.4
252	***	***	1.799	303.8	303.8	303.8	303.6	303.9	303.9	302.8	302.4	302.7	302.8	302.5	302.4	302.3

COORDINATES

I	R (M)	THETA (DEG)	Z (M)
1	0.229	00	0.152
2	0.229	00	0.000
3	0.076	00	0.152
4	0.102	00	0.076
5	0.076	00	-0.076
6	0.152	00	0.152
7	0.229	00	0.762
8	0.229	00	0.991
9	0.076	00	0.076
10	0.229	00	-0.076
11	0.152	00	0.762
12	0.229	00	0.914
13	0.229	00	0.838

UNCLASSIFIED

Table 4J — Scaling Run 116, Test Configuration 3: Three 1.52 cm Nozzles

1

TIME (SEC)	PRESSURANT FOW - TOTAL, P (BAR)	T (DEG K)	FILL-TANK P (BAR)	THERMOCOUPLES LOCATION I T(DEG K) 1	2	3	4	5	6	7	8	9	10	11	12	13
-5	***	***	1.057	302.2	302.0	302.0	302.1	301.5	302.1	300.2	300.6	300.3	300.8	300.5	300.2	300.3
-4	***	***	1.053	302.2	302.0	301.9	302.0	301.5	302.1	300.2	300.6	300.3	300.8	300.5	300.2	300.3
-3	***	***	1.049	302.2	302.0	302.0	302.0	301.5	302.1	300.2	300.6	300.3	300.8	300.5	300.2	300.3
-2	***	***	1.056	302.2	302.0	302.0	302.0	301.5	302.1	300.2	300.6	300.3	300.8	300.5	300.2	300.3
-1	***	***	1.053	302.2	302.0	301.9	302.1	301.5	302.1	300.2	300.6	300.3	300.8	300.5	300.2	300.3
0	6.382	293.8	1.050	302.2	302.0	302.0	302.0	301.5	302.0	300.2	300.4	300.3	303.6	300.4	300.2	300.3
1	6.334	301.3	1.076	303.1	302.4	301.9	302.4	302.8	303.6	302.3	303.7	304.4	305.8	301.8	302.4	301.5
2	5.940	296.1	1.164	308.5	307.8	303.8	307.7	306.5	309.1	306.0	309.6	306.8	308.4	307.2	307.6	306.8
3	5.702	291.7	1.219	311.6	311.7	306.4	311.9	309.9	312.3	308.9	312.1	309.3	311.0	309.4	310.4	309.8
4	5.365	288.9	1.303	314.8	314.6	310.1	315.1	313.1	315.1	311.4	314.6	311.5	313.2	311.8	315.2	312.3
5	5.286	287.3	1.390	316.4	315.9	312.9	315.9	315.1	316.5	312.8	317.0	314.6	316.5	314.6	314.3	314.6
6	4.765	286.0	1.454	316.5	316.6	314.1	316.9	315.7	317.0	313.5	315.7	313.9	315.0	314.0	314.5	314.3
7	4.500	284.7	1.516	316.5	317.0	315.3	316.9	315.4	316.5	314.1	314.5	314.3	315.9	314.3	315.0	314.8
8	4.337	283.5	1.561	316.6	317.1	315.8	317.1	315.6	316.6	314.3	315.2	314.5	315.8	313.8	318.7	314.7
9	4.199	282.8	1.618	316.6	317.3	316.1	317.3	315.6	316.5	314.3	315.2	315.3	316.1	314.5	314.9	314.9
10	3.896	281.8	1.673	316.3	317.0	316.1	316.8	315.5	316.1	314.1	315.1	314.5	315.6	314.3	314.9	314.7
11	3.811	280.9	1.727	316.0	316.6	315.9	316.5	315.3	316.2	315.1	314.7	314.3	315.4	313.9	314.6	314.5
12	3.513	290.2	1.777	315.9	316.5	316.0	316.6	315.3	315.9	313.7	315.1	314.0	315.2	313.9	314.5	314.4
13	3.413	289.7	1.808	315.5	316.3	315.8	316.0	314.8	315.5	313.8	314.5	313.8	314.8	313.6	314.3	314.2
14	3.386	287.5	1.816	315.4	315.7	315.6	315.5	314.5	315.5	313.6	313.7	313.5	315.0	313.5	313.4	313.5
15	***	***	1.816	314.9	315.2	315.2	315.0	314.5	314.7	312.8	313.1	313.2	313.8	312.9	313.0	313.2
16	***	***	1.812	314.6	314.7	315.0	314.6	314.3	314.4	312.4	312.6	313.0	313.5	312.5	312.5	312.8
17	***	***	1.809	314.3	314.3	314.5	314.2	313.9	313.8	312.3	312.4	312.3	312.9	312.1	312.1	312.4
18	***	***	1.812	313.8	313.8	314.2	313.8	313.8	313.5	311.8	312.3	312.4	312.4	311.9	311.7	312.4
19	***	***	1.805	313.6	313.6	313.9	313.6	313.6	313.1	311.8	311.9	312.1	312.2	311.6	311.5	312.7
20	***	***	1.803	313.3	313.4	313.5	313.4	313.5	312.8	311.3	311.6	311.9	312.0	311.3	311.0	311.5
21	***	***	1.803	313.2	313.1	313.2	313.3	313.2	312.6	310.9	311.3	314.3	311.7	311.1	310.5	311.2
22	***	***	1.807	313.1	312.8	312.9	313.2	312.9	312.5	310.8	311.3	311.1	311.5	310.9	310.3	310.9
27	***	***	1.799	312.1	311.6	311.7	312.1	311.9	311.2	309.7	309.8	310.2	310.2	310.2	308.4	309.5
32	***	***	1.798	311.0	310.6	310.7	311.1	311.3	310.0	308.7	309.1	309.2	309.1	309.3	308.0	309.9
37	***	***	1.789	310.2	309.5	309.5	310.2	310.5	309.2	307.9	308.6	308.4	308.0	308.5	307.2	308.0
42	***	***	1.791	309.4	308.6	308.8	309.4	309.8	308.7	307.3	307.9	307.6	307.2	307.7	306.6	307.2
47	***	***	1.810	308.7	308.0	308.3	308.6	309.1	308.1	310.9	307.3	307.1	306.6	307.4	308.4	308.0
52	***	***	1.788	308.2	307.5	307.8	308.1	308.5	307.8	306.3	306.7	306.6	306.2	306.9	305.3	306.1
57	***	***	1.784	307.9	307.0	307.5	307.6	307.7	307.4	305.5	306.2	306.2	305.8	306.6	305.1	305.5
62	***	***	1.783	307.5	306.7	307.1	307.1	307.2	307.0	305.5	305.6	305.7	305.4	305.9	304.7	305.3
67	***	***	1.794	307.0	306.4	306.8	306.8	306.8	306.7	307.0	308.1	305.3	305.3	305.6	304.4	306.6
72	***	***	1.782	306.7	306.2	306.6	306.5	306.6	306.4	304.8	305.0	305.1	305.1	305.3	304.2	304.7
82	***	***	1.779	306.4	305.8	306.1	306.1	305.9	306.2	304.5	306.8	304.6	304.5	304.7	304.0	304.3
92	***	***	1.784	306.2	305.5	305.9	305.9	305.6	305.9	304.0	304.4	304.2	304.2	304.4	303.8	304.0
102	***	***	1.777	305.9	305.3	305.5	305.6	305.3	305.5	303.8	304.1	304.0	304.0	304.1	303.6	303.8
112	***	***	1.785	305.6	305.1	305.2	305.2	305.2	305.3	303.5	303.9	303.8	303.8	303.8	303.4	303.5
122	***	***	1.780	305.2	304.9	305.2	305.0	305.0	305.2	303.3	303.7	303.6	303.6	303.6	303.1	303.3
132	***	***	1.783	305.1	304.7	304.9	304.8	305.0	304.9	303.1	303.5	303.5	303.5	303.4	303.1	303.1
142	***	***	1.779	305.0	304.6	304.8	304.6	304.9	304.8	303.1	303.3	303.3	303.5	303.2	302.9	303.1
152	***	***	1.779	304.8	304.5	304.6	304.5	304.9	304.7	302.9	303.1	303.1	303.4	303.1	302.9	303.0
162	***	***	1.774	304.7	304.5	304.6	304.5	305.0	304.6	302.7	303.0	303.1	303.4	303.0	302.8	303.0
172	***	***	1.779	304.6	304.5	304.5	304.5	305.0	304.6	302.8	302.9	303.1	303.3	303.0	302.7	302.8
182	***	***	1.780	304.5	304.4	304.5	304.4	304.9	304.5	304.3	302.8	302.9	304.7	304.2	304.4	305.3
192	***	***	1.777	304.5	304.4	304.5	304.3	304.8	304.5	302.6	302.8	302.8	303.1	302.8	302.6	302.6
202	***	***	1.777	304.5	304.4	304.5	304.2	304.8	304.5	302.6	303.1	302.7	303.1	302.7	302.5	302.2
212	***	***	1.779	304.4	304.2	304.4	304.1	304.8	304.5	302.5	302.7	302.7	303.1	302.7	302.5	302.6
222	***	***	1.776	304.4	304.2	304.4	304.0	304.7	304.5	302.5	302.6	302.8	303.1	302.7	302.5	302.5
232	***	***	1.775	304.2	304.2	304.3	304.0	304.6	304.4	302.5	302.6	302.8	303.1	302.7	302.5	302.5
242	***	***	1.779	304.2	304.2	304.3	304.0	304.5	304.4	302.4	302.6	302.7	303.1	302.6	302.4	302.5
252	***	***	1.770	304.2	304.2	304.2	304.0	304.3	304.4	302.4	302.5	302.7	303.1	302.6	302.4	302.5

COORDINATES

I	R (M)	THETA (DEG)	Z (M)
1	0.229	00	0.152
2	0.229	00	0.000
3	0.076	00	0.152
4	0.102	00	0.076
5	0.076	00	-0.076
6	0.152	00	0.152
7	0.229	00	0.762
8	0.229	00	0.991
9	0.076	00	0.076
10	0.229	00	-0.076
11	0.152	00	0.762
12	0.229	00	0.914
13	0.229	00	0.838

Table 5A — Inferred Pressurant Distribution, Scaling Run 103: Test Configuration 3

INFERRED PRESSURANT DISTRIBUTION - 5 C METER CHAMBER OBSTRUCTED GAS MIXI

TIME (SEC)	TEMP(DEG C) MEAN	AIR	PRESSURANT	BETA	BETA/TSTAR	PRESSURANT FRACTION MEAN I = 1	2	3	4	5	6	7	8	9	10	11	12	13
CONMENCE VALVE OPENING																		
0.0	25.3	25.3	14.5	.3	0.0000	0.000	0.000	0.000	0.000	0.000	0.000	0.000	0.000	0.000	0.00	0.000	0.000	
1.0	26.7	26.7	25.4	166.3	3.1666	.019	.301	.531	1.143	.760	.072	-.311	.684	-1.458	-.617	-.69	-.234	-.158	.225
VALVE FULLY OPEN																		
2.0	31.1	31.4	27.7	6.5	.2741	.060	.314	-.154	.397	.011	.369	-.265	.342	-.430	.094	-.12	.121	.011	.094
3.0	34.8	36.0	25.7	12.4	.7657	.116	.165	-.039	.602	.000	.165	-.048	.185	-.058	.156	.02	.175	.078	.097
4.0	36.3	38.5	25.5	16.3	1.0185	.170	.137	.007	1.219	.014	.114	.014	.145	.037	.130	.07	.130	.091	.091
5.0	38.5	41.8	26.2	8.3	.4053	.209	.261	.146	.184	.184	.248	.158	.254	.190	.229	.18	.242	.222	.216
6.0	39.3	43.5	26.7	12.3	.6087	.247	.278	.200	.218	.206	.284	.206	.289	.236	.266	.24	.289	.242	.260
7.0	39.5	44.1	26.8	13.1	.3409	.267	.288	.195	.282	.224	.305	.253	.305	.271	.282	.22	.294	.276	.265
8.0	39.6	44.9	27.1	13.2	.5386	.296	.308	.246	.280	.263	.308	.291	.330	.308	.308	.25	.325	.313	.313
9.0	39.5	45.5	27.5	13.9	.7002	.331	.331	.281	.342	.303	.364	.325	.353	.348	.320	.29	.342	.353	.342
10.0	39.5	45.7	27.6	13.7	.2416	.343	.346	.285	.352	.313	.385	.352	.363	.363	.335	.30	.357	.357	.341
CONMENCE VALVE CLOSURE																		
11.0	39.3	45.8	27.8	14.4	4929	.365	.373	.317	.378	.339	.389	.362	.384	.373	.367	.33	.389	.373	.362
12.0	39.3	46.0	28.3	18.9	.3633	.381	.383	.349	.372	.355	.411	.366	.394	.405	.383	.36	.400	.394	.377
VALVE FULLY CLOSED																		
13.0	38.8	45.5	28.7	22.6	.4348	.395	.396	.355	.390	.366	.408	.402	.408	.432	.390	.37	.408	.414	.390
14.0	36.9	42.9	27.9	19.6	.3777	.395	.402	.368	.415	.388	.402	.415	.402	.422	.382	.36	.402	.402	.375
15.0	38.3	44.8	28.5	-14.6	-.2805	.395	.388	.369	.400	.382	.388	.406	.406	.425	.388	.36	.406	.412	.394
16.0	38.3	44.8	28.5	0.0	0.0000	.395	.392	.367	.392	.385	.367	.422	.410	.428	.385	.36	.404	.416	.398
17.0	36.4	42.2	27.6	20.5	.3939	.395	.382	.368	.403	.389	.375	.410	.410	.417	.389	.36	.417	.410	.396
18.0	35.0	40.2	27.1	17.2	.3316	.395	.384	.369	.392	.377	.362	.407	.430	.422	.392	.36	.422	.407	.400
19.0	38.7	45.2	28.6	-40.9	-.7858	.395	.386	.380	.398	.386	.368	.404	.416	.410	.398	.37	.410	.404	.404
20.0	35.0	40.2	27.1	40.9	.7858	.395	.391	.368	.406	.391	.353	.414	.429	.414	.391	.35	.429	.398	.398
21.0	33.7	38.3	26.5	19.9	.3823	.395	.381	.364	.389	.381	.355	.406	.440	.423	.389	.35	.431	.406	.414
22.0	36.9	42.9	27.9	-42.7	-.8217	.395	.382	.375	.388	.382	.362	.402	.435	.415	.388	.36	.415	.408	.422
23.0	32.6	36.8	26.2	59.3	1.1403	.395	.375	.356	.384	.384	.347	.403	.450	.431	.393	.33	.431	.422	.422
24.0	34.9	40.0	27.0	-34.6	-.6658	.395	.373	.373	.388	.388	.350	.404	.435	.419	.396	.35	.419	.412	.427
25.0	35.9	41.4	27.5	-13.4	-.2572	.395	.381	.373	.381	.388	.352	.395	.438	.402	.402	.35	.424	.416	.431
26.0	35.9	41.4	27.5	0.0	0.0000	.395	.375	.375	.382	.389	.354	.389	.440	.404	.404	.35	.425	.411	.432
27.0	35.4	40.7	27.2	6.5	.1254	.395	.377	.370	.370	.392	.347	.385	.444	.399	.414	.34	.422	.422	.444
28.0	34.3	39.3	26.8	14.1	.2712	.395	.367	.367	.367	.383	.351	.391	.447	.407	.415	.34	.431	.423	.439
29.0	36.6	42.4	27.8	-28.7	-.5526	.395	.376	.383	.376	.390	.355	.390	.431	.403	.417	.34	.417	.417	.431
30.0	33.3	37.8	26.4	44.3	.8511	.395	.368	.377	.368	.385	.341	.385	.447	.412	.421	.33	.429	.429	.438
31.0	36.9	42.8	27.9	-48.1	-.9241	.395	.374	.368	.374	.381	.361	.388	.435	.408	.414	.34	.421	.421	.441
32.0	32.4	36.6	26.2	62.3	1.1968	.395	.359	.369	.379	.388	.350	.388	.446	.417	.427	.32	.427	.427	.436
33.0	35.7	41.1	27.4	-48.6	-.9348	.395	.362	.369	.376	.398	.355	.376	.435	.413	.413	.35	.420	.427	.435
34.0	33.0	37.3	26.3	39.8	.7647	.395	.362	.362	.371	.398	.344	.380	.435	.426	.417	.34	.417	.444	.435
35.0	33.7	38.3	26.6	-11.2	-.2159	.395	.359	.367	.376	.402	.350	.384	.427	.419	.419	.35	.410	.436	.436
36.0	35.6	40.9	27.4	-26.6	-.5111	.395	.369	.377	.369	.399	.355	.384	.428	.414	.406	.36	.399	.436	.436
37.0	32.3	36.3	26.1	49.6	.9536	.395	.345	.375	.365	.414	.335	.384	.424	.424	.404	.35	.404	.453	.453
38.0	31.4	35.1	25.8	17.2	.3306	.395	.339	.382	.361	.426	.350	.382	.426	.426	.404	.33	.393	.458	.447
39.0	30.2	33.3	25.4	28.6	.5501	.395	.342	.393	.368	.431	.342	.393	.418	.418	.406	.33	.380	.456	.456
40.0	31.4	35.1	25.8	-28.6	-.5501	.395	.342	.407	.374	.428	.353	.396	.407	.407	.396	.34	.396	.439	.450
41.0	33.8	38.5	26.7	-43.0	-.8272	.395	.362	.387	.379	.421	.362	.396	.404	.396	.396	.37	.396	.429	.438
42.0	35.6	40.9	27.4	-23.9	-.4603	.395	.369	.406	.384	.421	.354	.391	.406	.398	.391	.36	.391	.421	.435
43.0	36.8	42.5	27.9	-14.5	-.2786	.395	.373	.400	.387	.414	.359	.387	.407	.393	.400	.37	.387	.421	.434
44.0	33.8	38.5	26.7	38.2	.7352	.395	.379	.396	.388	.413	.354	.388	.405	.388	.396	.36	.396	.422	.447
45.0	32.4	36.5	26.2	23.0	.4414	.395	.368	.407	.378	.426	.349	.397	.407	.378	.397	.36	.388	.426	.445
46.0	31.2	34.8	25.7	24.1	.4628	.395	.364	.397	.386	.419	.331	.397	.419	.386	.397	.36	.408	.419	.442
47.0	30.4	33.6	25.5	20.4	.3929	.395	.361	.398	.385	.410	.336	.398	.410	.398	.410	.34	.410	.435	.435
48.0	30.5	33.8	25.5	-4.4	-.0839	.395	.360	.396	.372	.420	.348	.396	.420	.408	.396	.34	.396	.444	.432
49.0	34.0	38.8	26.7	-64.5	-1.2404	.395	.374	.391	.383	.416	.358	.399	.408	.399	.408	.36	.391	.416	.424
50.0	33.8	38.5	26.7	2.6	.0502	.395	.376	.385	.385	.410	.359	.401	.410	.393	.401	.36	.393	.427	.427

(Table continues)

UNCLASSIFIED

Table 5A — Inferred Pressurant Distribution, Scaling Run 103: Test Configuration 3 (Continued)

INFERRED PRESSURANT DISTRIBUTION - 5 C METER CHAMBER OBSTRUCTED GAS MIXI

TIME (SEC)	TEMP(DEG C) MEAN	AIR	PRESSURANT	BETA	BETA/TSTAR	PRESSURANT FRACTION MEAN I = 1	2	3	4	5	6	7	8	9	10	11	12	13
VALVE FULLY CLOSED																		
51.0	33.8	38.5	26.7	0.0	0.0000	.395	.383	.383	.383	.409	.358	.400	.409	.409	.400	.35	.383	.425	.434
52.0	35.7	41.1	27.4	-26.1	-.5017	.395	.384	.377	.392	.406	.362	.399	.399	.406	.392	.36	.392	.428	.435
53.0	33.1	37.5	26.4	36.9	.7101	.395	.382	.382	.391	.400	.356	.409	.400	.418	.391	.35	.382	.427	.436
54.0	31.4	35.1	25.8	32.3	.6202	.395	.373	.384	.395	.406	.352	.416	.406	.406	.384	.35	.384	.438	.438
55.0	31.2	34.8	25.7	3.7	.0718	.395	.386	.397	.397	.408	.353	.408	.397	.408	.375	.34	.386	.441	.441
56.0	30.7	34.1	25.6	11.9	.2286	.395	.371	.395	.395	.407	.348	.407	.395	.418	.383	.33	.395	.442	.442
57.0	29.5	32.3	25.2	32.7	.6293	.395	.371	.413	.399	.413	.343	.413	.385	.427	.371	.32	.385	.456	.427
58.0	33.3	37.8	26.4	-81.0	-1.5576	.395	.385	.402	.394	.411	.359	.402	.394	.420	.376	.36	.385	.429	.411
59.0	34.3	39.3	26.8	-15.8	-.3042	.395	.381	.413	.397	.405	.365	.405	.389	.413	.381	.37	.373	.421	.421
60.0	30.0	33.0	25.4	81.7	1.5699	.395	.375	.427	.401	.414	.335	.401	.388	.440	.375	.36	.375	.440	.401
61.0	34.2	39.0	26.8	-79.4	-1.5263	.395	.375	.408	.391	.408	.358	.399	.391	.424	.383	.37	.383	.424	.416
62.0	32.3	36.3	26.1	31.2	.6003	.395	.378	.407	.387	.417	.358	.407	.387	.417	.378	.36	.387	.427	.417
63.0	33.1	37.5	26.4	-15.2	-.2920	.395	.382	.400	.382	.418	.355	.400	.400	.418	.373	.37	.391	.427	.418
64.0	30.4	33.6	25.5	55.8	1.0720	.395	.381	.405	.368	.418	.331	.405	.405	.430	.368	.36	.393	.443	.418
65.0	35.0	40.2	27.1	-82.0	-1.5767	.395	.387	.402	.387	.410	.348	.402	.402	.410	.379	.37	.387	.425	.417
66.0	30.2	33.3	25.5	86.1	1.6544	.395	.387	.400	.387	.413	.322	.413	.400	.439	.361	.36	.387	.452	.413
67.0	34.2	38.9	26.9	-75.1	-1.4443	.395	.385	.401	.385	.410	.343	.401	.401	.418	.385	.37	.385	.426	.418
68.0	30.9	34.3	25.7	59.1	1.1361	.395	.380	.404	.392	.416	.334	.404	.404	.427	.369	.35	.392	.439	.416
69.0	31.1	34.5	25.8	-4.0	-.0762	.395	.386	.398	.386	.409	.329	.398	.398	.432	.375	.37	.398	.432	.421
70.0	31.1	34.5	25.8	0.0	0.0000	.395	.391	.403	.380	.414	.323	.403	.391	.437	.368	.36	.391	.437	.426
71.0	34.9	39.9	27.2	-64.6	-1.2412	.395	.394	.402	.386	.410	.347	.394	.394	.418	.378	.37	.386	.418	.426
72.0	30.4	33.5	25.6	79.9	1.5362	.395	.393	.406	.380	.418	.329	.393	.393	.431	.367	.36	.393	.431	.431
73.0	35.7	41.0	27.6	-90.0	-1.7295	.395	.397	.397	.390	.405	.352	.390	.397	.412	.382	.38	.390	.420	.420
74.0	31.2	34.7	25.9	71.5	1.3739	.395	.395	.406	.384	.406	.338	.395	.395	.429	.372	.37	.395	.429	.418
75.0	35.6	40.7	27.6	-69.4	-1.3352	.395	.392	.400	.384	.400	.354	.392	.400	.415	.384	.38	.384	.422	.422
76.0	29.3	31.8	25.6	113.3	2.1786	.395	.402	.402	.370	.419	.305	.386	.386	.435	.370	.38	.402	.451	.419
77.0	32.8	36.6	26.9	-78.1	-1.5010	.395	.394	.394	.384	.404	.343	.394	.404	.415	.374	.38	.394	.425	.425
78.0	32.3	35.9	26.7	9.3	.1794	.395	.402	.402	.381	.413	.338	.392	.402	.413	.370	.38	.392	.424	.424
79.0	30.4	33.3	25.9	41.1	.7900	.395	.403	.403	.376	.417	.322	.390	.403	.417	.376	.37	.403	.431	.417
80.0	33.3	37.4	27.1	-58.5	-1.1240	.395	.396	.396	.386	.415	.337	.386	.405	.405	.376	.38	.396	.425	.425
81.0	32.6	36.4	26.8	11.7	.2257	.395	.391	.401	.391	.422	.329	.401	.401	.412	.370	.38	.391	.422	.422
82.0	34.2	38.5	27.5	-25.0	-.4807	.395	.387	.396	.387	.414	.341	.396	.405	.396	.378	.38	.396	.423	.432
83.0	28.8	30.9	25.6	112.6	2.1641	.395	.373	.411	.392	.430	.297	.392	.411	.411	.373	.39	.392	.449	.411
84.0	32.6	36.2	27.2	-91.4	-1.7565	.395	.390	.401	.379	.412	.346	.390	.412	.401	.379	.37	.390	.423	.434
85.0	30.2	32.9	26.1	51.6	.9912	.395	.396	.411	.381	.411	.322	.396	.396	.411	.381	.38	.396	.426	.426
86.0	33.1	36.9	27.4	-60.1	-1.1545	.395	.391	.401	.391	.401	.338	.391	.401	.401	.391	.38	.401	.422	.422
87.0	31.1	34.1	26.5	39.7	.7631	.395	.385	.411	.398	.411	.319	.385	.411	.411	.385	.37	.398	.424	.424
88.0	31.8	35.0	26.8	-14.7	-.2832	.395	.391	.415	.379	.403	.330	.391	.415	.391	.391	.37	.391	.415	.440
89.0	30.5	33.3	26.3	26.9	.5176	.395	.384	.412	.384	.412	.314	.398	.412	.398	.384	.37	.412	.426	.426
90.0	33.7	37.6	27.6	-59.5	-1.1447	.395	.383	.403	.393	.403	.343	.393	.403	.393	.383	.38	.403	.413	.434
91.0	29.5	31.9	25.9	85.9	1.6524	.395	.387	.404	.387	.421	.303	.421	.404	.387	.370	.37	.421	.421	.438
92.0	35.2	39.6	28.4	-105.1	-2.0215	.395	.394	.394	.394	.403	.350	.403	.412	.394	.385	.37	.394	.412	.421
93.0	30.0	32.5	26.2	92.2	1.7726	.395	.391	.391	.376	.423	.313	.407	.407	.407	.376	.37	.407	.423	.438
94.0	35.0	39.3	28.5	-90.2	-1.7340	.395	.395	.395	.395	.404	.349	.395	.404	.395	.386	.37	.395	.423	.423
95.0	28.0	29.2	26.1	148.9	2.8623	.395	.434	.370	.370	.434	.242	.402	.402	.402	.370	.37	.434	.498	.402
96.0	32.3	34.8	28.4	-116.9	-2.2473	.395	.406	.390	.390	.406	.313	.390	.421	.406	.375	.37	.406	.437	.421
97.0	30.0	32.0	27.1	50.0	.9612	.395	.406	.406	.385	.427	.283	.385	.406	.406	.385	.36	.406	.447	.427
98.0	32.8	35.5	28.7	-58.9	-1.1328	.395	.398	.398	.384	.413	.310	.384	.413	.398	.384	.38	.398	.442	.428
99.0	32.1	34.6	28.3	12.6	.2421	.395	.392	.392	.408	.408	.298	.377	.408	.408	.392	.37	.408	.440	.424
100.0	29.5	31.3	26.8	61.3	1.1788	.395	.390	.390	.390	.435	.255	.390	.412	.412	.390	.39	.412	.457	.412

Table 5B — Inferred Pressurant Distribution, Scaling Run 104: Test Configuration 3

INFERRED PRESSURANT DISTRIBUTION - 5 C METER CHAMBER OBSTRUCTED GAS MIXI

TIME (SEC)	TEMP(DEG C) MEAN	AIR	PRESSURANT	BETA	BETA/TSTAR	PRESSURANT FRACTION MEAN I = 1	2	3	4	5	6	7	8	9	10	11	12	13
COMMENCE VALVE OPENING																		
0.0	25.9	25.9	10.4	.1	0.0000	0.000	0.000	0.000	0.000	0.000	0.000	0.000	0.000	0.000	0.00	0.000	0.000	
1.0	27.9	27.9	27.0	-220 3	-2.1051	.009	.077	.407	2.388	.738	.187	-1.243	1.068	-2.234	-.693	-.58	-.363	-.033	.407
VALVE FULLY OPEN																		
2.0	33.6	34.1	28.7	16.1	1.1407	.077	.158	-.085	.139	-.011	.326	-.216	.270	-.179	.158	.00	.139	.120	.176
3.0	36.9	38.6	26.4	11.0	.6991	.134	.144	.046	.120	.037	.226	-.004	.243	.054	.226	.12	.202	.144	.177
4.0	38.3	40.7	26.2	10.7	.3887	.165	.205	.060	.073	.108	.253	.101	.239	.136	.212	.12	.219	.205	.205
5.0	39.2	42.6	26.4	13.3	.7396	.210	.235	.130	.173	.161	.284	.167	.266	.204	.229	.17	.247	.229	.235
6.0	39.8	43.9	26.8	12.5	.4966	.241	.251	.176	.251	.187	.292	.205	.292	.234	.251	.19	.292	.251	.251
7.0	40.1	45.0	27.2	13.2	.6467	.277	.270	.242	.292	.242	.298	.236	.326	.270	.292	.25	.320	.281	.281
8.0	40.1	45.6	27.5	13.8	.5528	.306	.287	.253	.336	.248	.331	.276	.347	.314	.320	.27	.358	.314	.320
9.0	39.9	45.9	27.7	14.4	.4272	.326	.305	.278	.338	.278	.355	.311	.371	.333	.338	.29	.371	.333	.333
10.0	39.7	46.2	28.1	14.3	.6710	.357	.346	.313	.346	.335	.385	.341	.390	.363	.363	.34	.385	.363	.368
COMMENCE VALVE CLOSURE																		
11.0	39.7	46.2	28.0	70.2	.0069	.357	.356	.312	.339	.328	.389	.356	.394	.367	.361	.32	.400	.356	.356
12.0	39.4	46.1	28.8	72.5	.6959	.385	.386	.351	.374	.363	.461	.386	.392	.397	.374	.35	.392	.392	.380
VALVE FULLY CLOSED																		
13.0	39.1	45.7	28.5	-2.7	-.0256	.382	.383	.359	.383	.365	.418	.388	.383	.394	.371	.37	.400	.383	.365
14.0	42.7	50.5	30.0	-61.3	-.5890	.382	.372	.362	.372	.372	.396	.382	.392	.396	.382	.36	.396	.392	.382
15.0	39.5	46.2	28.6	54.6	.5239	.382	.367	.367	.373	.373	.390	.390	.401	.401	.367	.36	.401	.390	.379
16.0	42.8	50.7	30.1	-57.3	-.5498	.382	.376	.376	.385	.385	.385	.395	.390	.385	.371	.36	.395	.376	.376
17.0	41.6	49.0	29.5	19.7	.1894	.382	.380	.380	.385	.385	.385	.395	.390	.385	.375	.36	.390	.375	.375
18.0	36.5	42.0	27.5	101.5	.9746	.382	.375	.382	.389	.382	.389	.396	.389	.382	.369	.36	.396	.375	.369
19.0	40.5	47.6	29.1	-83.9	-.8054	.382	.372	.383	.388	.388	.378	.410	.388	.383	.367	.36	.383	.378	.378
20.0	42.8	50.7	30.1	-37.9	-.3636	.382	.377	.382	.397	.397	.372	.411	.392	.377	.368	.36	.377	.372	.377
21.0	37.0	42.8	27.7	108.2	1.0392	.382	.380	.386	.400	.406	.380	.426	.393	.373	.360	.34	.380	.366	.366
22.0	40.4	47.3	29.1	-68.3	-.6561	.382	.385	.385	.396	.407	.379	.423	.390	.368	.363	.35	.374	.363	.374
23.0	39.0	45.4	28.5	26.7	.2568	.382	.393	.387	.393	.410	.381	.416	.387	.357	.369	.36	.375	.357	.375
24.0	38.8	45.2	28.4	3.5	.0341	.382	.384	.384	.396	.408	.378	.426	.390	.360	.366	.36	.372	.366	.372
25.0	41.4	48.8	29.5	-48.6	-.4665	.382	.390	.385	.385	.401	.380	.411	.390	.364	.369	.36	.375	.364	.380
26.0	39.5	46.1	28.7	34.8	.3338	.382	.393	.399	.387	.410	.376	.427	.387	.353	.358	.37	.370	.358	.376
27.0	39.8	46.6	28.9	-6.7	-.0642	.382	.387	.399	.382	.410	.376	.421	.387	.348	.365	.37	.376	.359	.376
28.0	36.0	41.3	27.3	84.4	.8101	.382	.395	.410	.395	.431	.381	.431	.381	.338	.353	.36	.367	.353	.360
29.0	38.6	44.9	28.3	-60.7	-.5824	.382	.396	.414	.396	.420	.384	.420	.384	.341	.353	.37	.359	.347	.372
30.0	40.0	46.8	28.9	-27.4	-.2635	.382	.383	.411	.399	.422	.377	.422	.383	.344	.355	.38	.360	.349	.377
31.0	37.7	43.7	28.0	46.1	.4428	.382	.381	.413	.400	.419	.381	.419	.381	.343	.362	.38	.355	.349	.381
32.0	39.8	46.6	28.9	-42.9	-.4116	.382	.380	.402	.402	.413	.374	.413	.380	.351	.363	.38	.363	.351	.385
33.0	40.9	48.0	29.3	-19.1	-.1832	.382	.378	.404	.404	.410	.372	.410	.383	.346	.367	.38	.362	.362	.383
34.0	37.7	43.7	28.0	61.8	.5929	.382	.376	.408	.408	.401	.370	.408	.382	.344	.370	.38	.370	.357	.389
35.0	35.1	40.1	27.0	65.8	.6314	.382	.374	.412	.404	.404	.366	.404	.381	.351	.374	.37	.374	.366	.381
36.0	40.5	47.6	29.1	-119.8	-1.1500	.382	.373	.395	.390	.395	.373	.395	.384	.363	.379	.37	.379	.368	.390
37.0	35.8	41.0	27.2	101.3	.9727	.382	.363	.399	.385	.392	.370	.399	.392	.370	.385	.37	.377	.363	.392
38.0	34.0	38.6	26.6	51.2	.4912	.382	.361	.402	.377	.394	.377	.394	.394	.361	.394	.37	.377	.369	.386
39.0	37.7	43.7	28.0	-97.0	-.9310	.382	.359	.410	.384	.391	.384	.391	.384	.359	.378	.38	.378	.371	.391
40.0	41.1	48.3	29.4	-64.8	-.6218	.382	.359	.396	.385	.385	.375	.385	.391	.370	.380	.38	.375	.380	.396
41.0	37.4	43.2	27.8	72.5	.6964	.382	.355	.401	.388	.388	.368	.394	.394	.368	.381	.38	.375	.375	.394
42.0	37.9	44.0	28.1	-11.8	-.1130	.382	.356	.400	.388	.388	.375	.394	.394	.369	.381	.37	.375	.369	.400
43.0	38.8	45.2	28.4	-18.5	-.1776	.382	.356	.392	.380	.380	.368	.392	.398	.374	.380	.38	.380	.374	.404
44.0	40.5	47.6	29.2	-33.4	-.3210	.382	.363	.390	.379	.384	.373	.390	.401	.373	.373	.37	.379	.379	.406
45.0	37.9	44.0	28.1	51.8	.4974	.382	.361	.386	.386	.386	.374	.392	.399	.374	.374	.36	.380	.380	.405
46.0	36.3	41.8	27.4	37.0	.3550	.382	.361	.382	.382	.382	.368	.389	.410	.375	.375	.36	.382	.382	.410
47.0	36.7	42.3	27.6	-8.7	-.0835	.382	.359	.373	.386	.373	.366	.393	.407	.373	.380	.37	.386	.386	.407
48.0	38.1	44.2	28.1	-32.1	-.3082	.382	.359	.384	.390	.377	.371	.396	.396	.377	.377	.37	.377	.377	.409
49.0	38.8	45.2	28.4	-14.7	-.1411	.382	.361	.385	.385	.379	.367	.396	.396	.379	.373	.37	.379	.384	.408
50.0	41.4	48.7	29.6	-48.6	-.4665	.382	.364	.385	.380	.380	.364	.390	.395	.380	.375	.37	.375	.385	.416

(Table continues)

UNCLASSIFIED

Table 5B — Inferred Pressurant Distribution, Scaling Run 104: Test Configuration 3 (Continued)

INFERRED PRESSURANT DISTRIBUTION - 5 C METER CHAMBER OBSTRUCTED GAS MIXI

TIME (SEC)	TEMP(DEG C) MEAN	AIR	PRESSURANT	BETA	BETA/TSTAR	PRESSURANT FRACTION MEAN I = 1	2	3	4	5	6	7	8	9	10	11	12	13
VALVE FULLY CLOSED																		
51.0	38.6	44.9	28.4	52.2	.5007	.382	.368	.380	.380	.380	.356	.392	.398	.380	.368	.37	.374	.392	.417
52.0	34.5	39.3	26.8	99.2	.9521	.382	.368	.384	.376	.376	.344	.400	.400	.384	.368	.36	.384	.400	.424
53.0	33.7	38.1	26.5	28.1	.2695	.382	.368	.376	.376	.376	.342	.394	.402	.385	.376	.35	.376	.411	.420
54.0	33.7	38.1	26.5	0.0	0.0000	.382	.370	.370	.378	.378	.344	.404	.396	.396	.370	.35	.378	.413	.413
55.0	37.5	43.5	27.9	-104.4	-1.0020	.382	.366	.366	.379	.379	.353	.398	.398	.385	.372	.36	.379	.405	.417
56.0	39.0	45.4	28.5	-29.8	-.2862	.382	.367	.373	.373	.379	.355	.390	.396	.390	.373	.37	.379	.402	.414
57.0	37.9	44.0	28.1	22.0	.2116	.382	.360	.373	.373	.379	.354	.392	.398	.392	.373	.36	.379	.405	.417
58.0	37.7	43.7	28.0	3.9	.0371	.382	.362	.375	.375	.381	.356	.394	.394	.388	.375	.36	.381	.400	.419
59.0	35.4	40.6	27.1	56.1	.5382	.382	.370	.378	.378	.378	.355	.393	.393	.385	.370	.35	.385	.408	.415
60.0	33.7	38.1	26.5	53.3	.5114	.382	.362	.380	.380	.388	.345	.397	.397	.388	.371	.35	.380	.406	.414
61.0	33.5	37.8	26.4	6.0	.0576	.382	.374	.374	.383	.392	.348	.401	.392	.392	.374	.33	.383	.401	.409
62.0	38.4	44.7	28.2	-128.2	-1.2304	.382	.370	.376	.382	.388	.358	.394	.394	.388	.370	.36	.376	.394	.407
63.0	39.7	46.4	28.8	-24.5	-.2352	.382	.373	.378	.378	.390	.361	.390	.395	.384	.373	.36	.378	.395	.401
64.0	36.5	42.0	27.5	68.0	.6532	.382	.367	.374	.388	.395	.354	.395	.395	.381	.367	.36	.381	.402	.402
65.0	32.8	36.8	26.2	110.7	1.0629	.382	.365	.374	.393	.393	.346	.393	.393	.393	.365	.35	.384	.403	.403
66.0	38.1	44.2	28.1	-145.0	-1.3917	.382	.371	.377	.384	.390	.359	.396	.390	.384	.371	.36	.371	.396	.408
67.0	34.5	39.3	26.8	88.4	.8490	.382	.373	.381	.381	.388	.357	.396	.396	.388	.365	.36	.373	.396	.404
68.0	35.8	41.1	27.2	-34.8	-.3340	.382	.375	.382	.375	.397	.353	.397	.390	.390	.368	.36	.375	.396	.404
69.0	37.4	43.3	27.8	-38.8	-.3726	.382	.373	.386	.379	.392	.360	.392	.386	.386	.373	.37	.373	.392	.399
70.0	40.7	47.8	29.2	-66.5	-.6385	.382	.376	.381	.376	.392	.359	.386	.392	.386	.370	.37	.376	.392	.402
71.0	37.2	43.0	27.8	70.5	.6767	.382	.378	.384	.378	.397	.351	.384	.391	.384	.365	.37	.378	.397	.404
72.0	32.6	36.5	26.2	133.0	1.2772	.382	.380	.380	.380	.409	.342	.390	.390	.380	.361	.37	.380	.400	.400
73.0	36.5	42.0	27.5	-117.2	-1.1249	.382	.376	.383	.376	.397	.349	.390	.397	.383	.370	.37	.376	.397	.397
74.0	36.5	42.0	27.5	0.0	0.0000	.382	.373	.387	.387	.400	.352	.393	.393	.380	.366	.36	.373	.393	.400
75.0	38.8	45.1	28.5	-51.0	-.4895	.382	.371	.383	.383	.395	.353	.389	.395	.377	.371	.37	.377	.395	.401
76.0	34.9	39.8	27.0	92.6	.8886	.382	.373	.381	.381	.396	.349	.388	.396	.381	.373	.37	.381	.396	.396
77.0	37.2	43.0	27.8	-59.0	-.5663	.382	.371	.384	.378	.391	.351	.384	.398	.378	.371	.37	.378	.396	.404
78.0	35.8	41.0	27.3	34.8	.3339	.382	.366	.388	.381	.388	.344	.388	.395	.388	.373	.37	.388	.395	.395
79.0	37.4	43.2	27.9	-38.8	-.3726	.382	.372	.385	.378	.391	.346	.385	.398	.385	.372	.37	.385	.398	.398
80.0	37.2	43.0	27.8	4.0	.0388	.382	.377	.383	.377	.397	.350	.383	.397	.383	.370	.37	.383	.397	.397
81.0	37.7	43.7	28.1	-11.9	-.1147	.382	.375	.388	.375	.394	.356	.388	.394	.381	.375	.36	.381	.394	.394
82.0	37.5	43.4	28.0	3.9	.0377	.382	.373	.386	.379	.392	.353	.386	.392	.379	.379	.37	.386	.392	.392
83.0	37.4	43.2	27.9	4.0	.0382	.382	.378	.385	.378	.391	.352	.385	.391	.385	.378	.37	.378	.391	.398
84.0	36.7	42.2	27.6	16.6	.1590	.382	.381	.388	.374	.395	.354	.388	.388	.381	.374	.37	.381	.388	.395
85.0	32.4	36.3	26.2	127.8	1.2272	.382	.380	.390	.380	.400	.341	.400	.390	.380	.370	.37	.380	.400	.380
86.0	37.4	43.2	27.9	-143.3	-1.3754	.382	.378	.385	.385	.391	.352	.391	.391	.378	.378	.37	.378	.391	.391
87.0	33.5	37.8	26.5	106.3	1.0206	.382	.384	.384	.384	.393	.340	.393	.384	.384	.376	.38	.384	.393	.376
88.0	38.2	44.4	28.3	-124.7	-1.1970	.382	.379	.379	.385	.391	.354	.385	.391	.379	.379	.37	.379	.391	.391
89.0	36.3	41.7	27.5	44.5	.4271	.382	.383	.376	.383	.390	.348	.390	.383	.383	.376	.37	.383	.390	.397
90.0	37.5	43.4	28.0	-29.2	-.2805	.382	.382	.382	.382	.388	.349	.388	.388	.382	.375	.37	.382	.395	.395
91.0	36.8	42.5	27.7	16.3	.1565	.382	.377	.383	.383	.390	.343	.390	.390	.377	.377	.38	.383	.390	.397
92.0	35.1	40.0	27.0	45.8	.4394	.382	.375	.390	.382	.398	.344	.390	.390	.375	.375	.37	.382	.398	.390
93.0	35.6	40.8	27.2	-14.6	-.1405	.382	.370	.385	.378	.393	.348	.385	.393	.378	.378	.38	.385	.393	.393
94.0	35.6	40.8	27.2	0.0	0.0000	.382	.373	.381	.381	.395	.344	.388	.395	.381	.373	.37	.381	.403	.395
95.0	35.6	40.8	27.2	0.0	0.0000	.382	.372	.386	.379	.394	.349	.386	.401	.379	.372	.37	.379	.401	.386
96.0	37.7	43.7	28.1	-51.3	-.4927	.382	.377	.383	.377	.390	.351	.383	.396	.377	.377	.37	.383	.396	.396
97.0	38.2	44.4	28.3	-11.4	-.1097	.382	.381	.387	.375	.387	.350	.387	.394	.369	.381	.37	.381	.394	.400
98.0	36.7	42.2	27.7	35.8	.3441	.382	.379	.385	.379	.385	.344	.392	.399	.372	.379	.37	.385	.399	.392
99.0	32.2	36.0	26.2	134.5	1.2915	.382	.375	.385	.385	.385	.334	.395	.395	.375	.375	.37	.385	.405	.395
100.0	37.9	43.9	28.2	-160.6	-1.5417	.382	.375	.382	.375	.382	.350	.388	.394	.382	.382	.37	.382	.394	.401

Table 5C — Inferred Pressurant Distribution, Scaling Run 105: Test Configuration 3

INFERRED PRESSURANT DISTRIBUTION - 5 C METER CHAMBER OBSTRUCTED GAS MIXI

TIME (SEC)	TEMP(DEG C) MEAN	AIR	PRESSURANT	BETA	BETA/TSTAR	PRESSURANT FRACTION MEAN I = 1	2	3	4	5	6	7	8	9	10	11	12	13
COMMENCE VALVE OPENING																		
0.0	21.7	21.7	29.4	1.4	0.0000	0.000	0.000	0.000	0.000	0.000	0.000	0.000	0.000	0.000	0.00	0.000	0.000	
1.0	26.0	26.2	22.0	24.1	1.1388	.046	-.061	-.387	-.224	-.318	.102	-.457	.544	-.085	.265	.24	.242	.288	.451
VALVE FULLY OPEN																		
2.0	30.3	31.3	22.1	15.4	1.0610	.110	.160	-.003	.018	.018	.345	-.003	.236	-.025	.138	.10	.106	.116	.214
3.0	33.1	35.0	23.0	10.1	.5452	.156	.201	.060	.044	.077	.317	.110	.226	.077	.218	.12	.218	.160	.201
4.0	34.9	37.9	23.9	13.4	1.0097	.217	.236	.165	.050	.165	.343	.215	.279	.158	.272	.19	.265	.222	.265
5.0	34.8	38.3	24.2	16.7	.6333	.247	.226	.162	.771	.162	.304	.198	.240	.155	.212	.16	.212	.183	.219
6.0	35.9	39.9	24.8	8.7	.2457	.268	.284	.218	.376	.218	.363	.271	.277	.231	.257	.21	.284	.236	.251
7.0	34.7	39.1	24.7	19.1	1.0452	.306	.249	.173	1.310	.186	.290	.270	.256	.180	.221	.16	.242	.200	.242
8.0	36.0	40.9	25.4	-2.7	-.0379	.316	.349	.298	.304	.304	.381	.356	.324	.298	.311	.25	.330	.296	.298
9.0	35.8	41.2	25.5	14.8	.7161	.348	.365	.314	.466	.326	.416	.384	.339	.314	.307	.29	.339	.320	.346
COMMENCE VALVE CLOSURE																		
10.0	35.9	41.8	25.8	12.8	.3748	.367	.398	.360	.261	.367	.429	.423	.385	.360	.360	.32	.367	.360	.373
11.0	35.8	41.8	26.0	4.4	.2148	.376	.395	.370	.319	.364	.440	.421	.383	.376	.357	.34	.370	.370	.376
VALVE FULLY CLOSED																		
12.0	35.5	41.4	26.8	15.0	.7272	.402	.404	.397	.370	.390	.480	.445	.411	.390	.404	.37	.376	.383	.404
13.0	33.0	38.0	25.5	10.5	.5102	.402	.403	.395	.339	.387	.443	.475	.419	.403	.395	.34	.411	.395	.411
14.0	29.7	33.7	23.9	17.3	.8408	.402	.430	.399	.318	.399	.440	.502	.410	.420	.389	.31	.399	.389	.410
15.0	32.1	36.9	25.1	-13.4	-.6482	.402	.404	.388	.345	.413	.413	.498	.421	.413	.396	.32	.396	.396	.413
16.0	30.4	34.6	24.2	9.2	.4465	.402	.421	.383	.344	.411	.411	.518	.411	.411	.373	.32	.411	.392	.411
17.0	34.3	39.8	26.2	-19.0	-.9201	.402	.413	.383	.369	.413	.405	.493	.420	.405	.391	.33	.391	.391	.413
18.0	30.2	34.3	24.1	20.0	.9679	.402	.410	.381	.361	.410	.420	.518	.420	.400	.391	.32	.400	.381	.410
19.0	33.5	38.7	25.8	-16.5	-.7984	.402	.407	.399	.345	.392	.415	.485	.438	.392	.399	.33	.399	.392	.423
20.0	28.2	31.5	23.3	29.9	1.4487	.402	.393	.406	.321	.406	.406	.539	.430	.406	.406	.28	.406	.393	.430
21.0	30.9	35.2	24.5	-17.9	-.8697	.402	.385	.404	.329	.404	.395	.488	.432	.404	.413	.32	.413	.395	.442
22.0	33.1	38.2	25.7	-11.1	-.5372	.402	.404	.396	.348	.404	.396	.476	.436	.396	.404	.33	.396	.396	.444
23.0	31.4	35.9	24.8	8.3	.4033	.402	.398	.389	.362	.398	.407	.488	.425	.398	.416	.31	.389	.398	.443
24.0	27.7	30.8	23.1	24.7	1.1958	.402	.386	.373	.321	.399	.399	.528	.438	.412	.438	.27	.399	.412	.451
25.0	30.8	35.0	24.5	-21.1	-1.0228	.402	.396	.396	.348	.406	.386	.491	.434	.396	.415	.31	.396	.396	.453
26.0	30.4	34.5	24.3	2.0	.0961	.402	.391	.400	.361	.420	.400	.499	.430	.391	.410	.29	.381	.410	.440
27.0	29.0	32.7	23.7	8.8	.4256	.402	.394	.405	.339	.416	.394	.505	.427	.383	.416	.29	.383	.405	.461
28.0	27.5	30.6	23.0	12.1	.5845	.402	.385	.411	.332	.411	.385	.516	.424	.398	.424	.27	.411	.411	.437
29.0	32.8	37.7	25.5	-32.3	-1.5658	.402	.390	.406	.357	.406	.390	.472	.431	.398	.423	.32	.382	.398	.447
30.0	27.9	31.0	23.1	29.6	1.4358	.402	.387	.425	.311	.425	.387	.501	.438	.400	.425	.29	.387	.387	.451
31.0	32.3	37.0	25.3	-27.4	-1.3267	.402	.391	.425	.349	.408	.391	.460	.425	.383	.425	.33	.391	.400	.442
32.0	27.7	30.8	23.1	28.7	1.3919	.402	.370	.435	.344	.409	.383	.500	.448	.357	.435	.30	.396	.383	.461
33.0	26.8	29.6	22.7	7.9	.3847	.402	.378	.437	.335	.437	.378	.510	.451	.349	.437	.29	.407	.378	.437
34.0	28.7	32.2	23.6	-16.0	-.7748	.402	.389	.436	.343	.436	.389	.506	.436	.366	.424	.29	.389	.378	.436
35.0	29.7	33.5	24.1	-7.0	-.3409	.402	.395	.426	.352	.437	.384	.500	.426	.352	.437	.32	.373	.373	.447
36.0	26.5	29.1	22.6	26.1	1.2668	.402	.389	.466	.342	.451	.389	.543	.420	.358	.420	.29	.389	.358	.404
37.0	28.9	32.4	23.7	-20.6	-1.0002	.402	.396	.442	.338	.453	.384	.499	.419	.350	.407	.32	.373	.384	.453
38.0	30.2	34.2	24.3	-9.0	-.4348	.402	.396	.446	.355	.436	.385	.487	.426	.345	.406	.34	.365	.375	.456
39.0	26.3	28.8	22.6	30.8	1.4937	.402	.408	.472	.311	.489	.392	.553	.408	.311	.392	.34	.360	.360	.424
40.0	31.4	35.8	25.0	-36.8	-1.7859	.402	.399	.445	.343	.445	.390	.482	.418	.343	.408	.36	.353	.390	.445
41.0	24.6	26.1	22.4	55.8	2.7031	.402	.427	.538	.234	.538	.344	.648	.400	.234	.400	.31	.344	.344	.455
42.0	29.2	32.2	24.8	-45.7	-2.2135	.402	.411	.465	.317	.479	.384	.519	.398	.317	.398	.34	.371	.371	.452
43.0	24.8	26.2	22.6	43.3	2.0972	.402	.429	.512	.237	.540	.347	.650	.374	.264	.402	.34	.347	.347	.429
44.0	29.4	32.3	25.1	-44.2	-2.1432	.402	.426	.454	.329	.468	.385	.537	.399	.315	.399	.35	.343	.371	.440
45.0	26.3	28.3	23.4	25.8	1.2502	.402	.435	.495	.313	.495	.394	.596	.374	.293	.374	.33	.354	.354	.414
46.0	31.1	34.5	26.1	-35.2	-1.7076	.402	.419	.455	.336	.455	.395	.527	.407	.324	.383	.36	.336	.372	.455
47.0	26.5	28.5	23.5	33.6	1.6267	.402	.458	.498	.279	.518	.399	.598	.379	.279	.379	.33	.319	.359	.419
48.0	28.0	30.5	24.3	-14.3	-.6924	.402	.439	.488	.309	.504	.423	.570	.374	.293	.374	.35	.325	.325	.439
49.0	28.4	30.9	24.5	-2.7	-.1316	.402	.439	.502	.298	.502	.408	.549	.377	.314	.377	.34	.330	.361	.424
50.0	27.9	30.3	24.3	4.1	.2000	.402	.438	.504	.288	.504	.404	.570	.371	.305	.388	.35	.338	.338	.421

(Table continues)

UNCLASSIFIED

Table 5C — Inferred Pressurant Distribution, Scaling Run 105: Test Configuration 3 (Continued)

INFERRED PRESSURANT DISTRIBUTION - 5 C METER CHAMBER OBSTRUCTED GAS MIXI

TIME (SEC)	TEMP(DEG C) MEAN	AIR	PRESSURANT	BETA	BETA/TSTAR	PRESSURANT FRACTION MEAN	I = 1	2	3	4	5	6	7	8	9	10	11	12	13
VALVE FULLY CLOSED																			
51.0	28.9	31.6	24.9	-7.9	-.3847	.402	.429	.474	.325	.504	.414	.563	.370	.310	.385	.32	.340	.370	.414
52.0	24.3	25.4	22.6	48.9	2.3689	.402	.483	.587	.238	.657	.448	.797	.273	.168	.343	.27	.273	.308	.378
53.0	28.0	30.3	24.7	-43.7	-2.1158	.402	.442	.495	.317	.513	.406	.602	.353	.281	.388	.31	.335	.370	.406
54.0	27.0	29.0	24.0	9.1	.4413	.402	.442	.523	.341	.544	.422	.624	.341	.260	.361	.32	.301	.341	.402
55.0	30.2	33.1	26.1	-24.2	-1.1730	.402	.422	.479	.350	.493	.407	.550	.365	.322	.365	.33	.322	.379	.436
56.0	27.0	29.0	24.1	24.2	1.1730	.402	.433	.514	.311	.514	.392	.636	.332	.291	.372	.33	.311	.352	.433
57.0	30.9	33.9	26.5	-27.9	-1.3531	.402	.421	.475	.326	.475	.407	.542	.367	.326	.394	.35	.312	.380	.448
58.0	27.7	29.8	24.5	22.0	1.0675	.402	.436	.492	.325	.492	.399	.585	.343	.306	.380	.34	.325	.362	.436
59.0	28.5	30.9	25.0	-6.9	-.3334	.402	.436	.486	.318	.486	.402	.571	.351	.334	.368	.33	.318	.385	.436
60.0	23.9	24.8	22.6	52.6	2.5477	.402	.501	.591	.144	.635	.412	.859	.234	.278	.278	.27	.234	.323	.457
61.0	28.0	30.0	25.1	-49.5	-2.4005	.402	.442	.483	.280	.503	.382	.605	.361	.341	.382	.30	.300	.382	.463
62.0	24.6	25.7	23.0	38.2	1.8523	.402	.496	.569	.163	.606	.348	.791	.274	.311	.311	.27	.274	.385	.422
63.0	27.9	29.7	25.0	-37.0	-1.7929	.402	.434	.498	.265	.498	.371	.625	.371	.328	.371	.32	.286	.392	.456
64.0	27.9	29.7	25.0	0.0	0.0000	.402	.456	.477	.244	.498	.371	.625	.371	.328	.371	.32	.307	.392	.456
65.0	27.3	29.1	24.7	4.5	.2174	.402	.452	.497	.272	.497	.362	.633	.362	.317	.362	.36	.294	.362	.452
66.0	27.9	29.7	25.0	-4.5	-.2174	.402	.433	.496	.284	.496	.369	.602	.369	.348	.369	.32	.306	.390	.433
67.0	24.1	25.0	22.8	45.4	2.2005	.402	.507	.598	.189	.598	.325	.870	.279	.325	.279	.27	.234	.325	.416
68.0	28.5	30.5	25.6	-49.7	-2.4079	.402	.430	.492	.307	.492	.348	.615	.348	.369	.369	.32	.307	.369	.451
69.0	26.1	27.6	24.0	21.9	1.0608	.402	.452	.480	.283	.508	.367	.677	.311	.395	.339	.28	.311	.395	.424
70.0	29.0	31.1	26.0	-25.4	-1.2321	.402	.445	.465	.289	.484	.387	.602	.367	.348	.367	.30	.289	.387	.484
71.0	27.0	28.6	24.6	16.7	.8110	.402	.451	.501	.278	.501	.402	.650	.328	.377	.352	.27	.278	.402	.427
72.0	26.1	27.6	24.0	9.1	.4387	.402	.471	.499	.246	.527	.387	.668	.330	.359	.302	.33	.274	.359	.471
73.0	27.9	29.7	25.2	-16.6	-.8066	.402	.439	.484	.306	.484	.373	.617	.351	.373	.328	.30	.306	.417	.439
74.0	24.4	25.4	23.0	39.7	1.9235	.402	.517	.517	.142	.601	.351	.809	.309	.351	.267	.22	.267	.434	.434
75.0	27.5	29.2	25.0	-37.1	-1.8004	.402	.450	.497	.259	.497	.354	.617	.378	.354	.330	.33	.282	.402	.474
76.0	26.5	28.0	24.3	10.0	.4839	.402	.472	.499	.252	.499	.334	.664	.362	.362	.334	.27	.279	.417	.472
77.0	27.9	29.6	25.2	-12.9	-.6251	.402	.457	.479	.273	.502	.342	.617	.388	.365	.342	.34	.273	.388	.457
78.0	25.6	26.9	23.8	22.7	1.1019	.402	.502	.534	.248	.566	.343	.725	.343	.343	.311	.27	.248	.375	.407
79.0	26.8	28.4	24.6	-13.6	-.6605	.402	.473	.499	.262	.525	.368	.656	.368	.341	.315	.34	.262	.368	.446
80.0	27.3	29.0	24.9	-4.9	-.2381	.402	.470	.519	.298	.519	.347	.641	.372	.347	.323	.32	.274	.372	.421
81.0	25.6	26.9	23.8	18.4	.8930	.402	.483	.547	.260	.547	.323	.706	.355	.355	.323	.26	.292	.355	.419
82.0	28.5	30.4	25.7	-27.8	-1.3494	.402	.466	.487	.296	.487	.359	.593	.402	.338	.359	.33	.274	.359	.466
83.0	27.3	29.0	24.9	9.9	.4795	.402	.449	.522	.302	.498	.351	.644	.376	.351	.327	.32	.278	.351	.449
84.0	26.8	28.4	24.5	4.9	.2381	.402	.462	.515	.279	.541	.331	.672	.384	.331	.305	.33	.305	.331	.436
85.0	27.2	28.8	24.8	-3.3	-.1613	.402	.465	.515	.290	.515	.340	.640	.365	.365	.315	.31	.290	.365	.440
86.0	26.1	27.5	24.1	10.7	.5174	.402	.498	.527	.266	.527	.324	.701	.353	.382	.324	.26	.295	.353	.411
87.0	27.9	29.6	25.2	-16.6	-.8066	.402	.449	.495	.289	.495	.358	.633	.381	.358	.335	.33	.312	.335	.449
88.0	27.2	28.8	24.8	6.1	.2942	.402	.477	.502	.277	.527	.327	.651	.377	.352	.327	.30	.302	.352	.452
89.0	26.1	27.5	24.1	10.7	.5174	.402	.478	.507	.275	.536	.333	.710	.362	.362	.304	.27	.304	.362	.420
90.0	26.5	27.9	24.3	-3.8	-.1852	.402	.493	.493	.245	.548	.328	.685	.383	.328	.328	.30	.300	.355	.438
91.0	29.7	31.9	26.6	-26.1	-1.2668	.402	.468	.450	.299	.487	.337	.581	.412	.355	.355	.33	.299	.374	.468
92.0	25.3	26.4	23.6	39.5	1.9121	.402	.545	.510	.194	.580	.299	.756	.369	.334	.299	.26	.299	.369	.405
93.0	26.7	28.1	24.5	-16.5	-.8002	.402	.496	.524	.273	.524	.357	.663	.385	.329	.301	.32	.273	.329	.440
94.0	27.0	28.5	24.7	-3.4	-.1667	.402	.475	.502	.263	.528	.343	.661	.369	.343	.343	.29	.316	.369	.422
95.0	26.3	27.7	24.3	7.1	.3449	.402	.510	.539	.276	.539	.334	.686	.363	.305	.305	.33	.276	.334	.422
96.0	30.1	32.2	26.9	-29.9	-1.4476	.402	.459	.478	.307	.496	.345	.591	.383	.345	.345	.36	.288	.383	.440
97.0	26.8	28.3	24.6	24.8	1.2027	.402	.511	.511	.266	.511	.320	.673	.348	.320	.348	.34	.293	.375	.402
98.0	23.6	24.2	22.7	47.8	2.3177	.402	.643	.707	.067	.771	.195	1.027	.259	.195	.195	.32	.195	.259	.387
99.0	26.3	27.6	24.4	-43.4	-2.1059	.402	.509	.541	.255	.541	.287	.732	.350	.351	.319	.28	.287	.351	.414
100.0	26.3	27.6	24.4	0.0	0.0000	.402	.502	.534	.248	.566	.311	.724	.343	.311	.311	.31	.280	.343	.438

Table 5D — Inferred Pressurant Distribution, Scaling Run 106: Test Configuration 3

INFERRED PRESSURANT DISTRIBUTION - 5 C METER CHAMBER OBSTRUCTED GAS MIXI

TIME (SEC)	TEMP(DEG C) MEAN	AIR	PRESSURANT	BETA	BETA/TSTAR	PRESSURANT FRACTION MEAN I = 1	2	3	4	5	6	7	8	9	10	11	12	13
CONMENCE VALVE OPENING																		
0.0	22.8	22.8	9.1	.2	0.0000	0.000	0.000	0.000	0.000	0.000	0.000	0.000	0.000	0.000	0.00	0.000	0.000	
1.0	26.3	26.4	20.9	-38.7	-.9726	.025	-.123	-.325	.134	-.270	-.013	-.435	.354	-.032	.189	.17	.207	.207	.262
VALVE FULLY OPEN																		
2.0	30.9	31.7	21.9	7.3	.3921	.076	.143	-.063	.061	-.032	.256	-.022	.174	-.053	.133	.07	.102	.102	.112
3.0	34.0	35.9	23.2	14.9	1.2229	.149	.178	.036	.060	.036	.288	.060	.225	.083	.217	.16	.201	.186	.201
4.0	35.9	38.6	24.1	9.3	.3899	.184	.213	.117	.110	.117	.289	.137	.241	.158	.206	.18	.206	.199	.206
5.0	36.5	39.8	24.6	13.2	.5376	.216	.234	.156	.142	.149	.313	.188	.254	.208	.241	.20	.234	.234	.247
6.0	37.1	41.1	25.2	12.8	.5555	.249	.264	.189	.227	.189	.327	.220	.289	.233	.283	.22	.289	.252	.258
7.0	37.3	41.7	25.5	13.3	.4260	.273	.281	.213	.269	.232	.336	.275	.293	.256	.293	.23	.312	.275	.275
8.0	37.2	42.3	25.8	14.2	.6693	.306	.323	.256	.286	.280	.359	.329	.341	.292	.311	.26	.347	.298	.298
9.0	37.2	42.8	26.3	14.0	.7135	.341	.372	.281	.330	.312	.414	.378	.366	.318	.342	.30	.348	.330	.336
10.0	37.2	42.9	26.4	13.7	.1491	.348	.360	.324	.318	.330	.385	.367	.367	.348	.354	.31	.360	.348	.342
CONMENCE VALVE CLOSURE																		
11.0	36.9	43.2	26.6	14.4	.6785	.378	.375	.351	.369	.351	.405	.399	.405	.369	.381	.35	.405	.369	.381
12.0	36.7	43.0	26.6	4.2	.1072	.381	.386	.367	.367	.361	.423	.392	.404	.374	.380	.35	.398	.374	.374
VALVE FULLY CLOSED																		
13.0	36.3	42.4	27.1	18.7	.4757	.396	.406	.393	.380	.386	.445	.432	.399	.393	.380	.37	.399	.386	.380
14.0	38.9	45.8	28.4	-17.1	-.4346	.396	.409	.398	.380	.403	.409	.449	.398	.386	.380	.38	.386	.380	.392
15.0	34.6	40.1	26.2	30.2	.7690	.396	.396	.404	.404	.389	.404	.447	.404	.389	.382	.36	.404	.382	.382
16.0	32.7	37.5	25.3	17.1	.4346	.396	.398	.390	.406	.382	.406	.464	.406	.382	.390	.35	.406	.390	.374
17.0	34.6	40.1	26.2	-17.1	-.4346	.396	.404	.396	.404	.389	.404	.447	.411	.389	.375	.36	.396	.382	.389
18.0	33.4	38.5	25.6	10.5	.2681	.396	.403	.403	.387	.387	.395	.442	.403	.387	.387	.36	.403	.395	.395
19.0	34.9	40.6	26.4	-13.3	-.3395	.396	.400	.400	.385	.393	.385	.442	.407	.385	.400	.37	.378	.400	.407
20.0	33.2	38.2	25.6	14.9	.3801	.396	.396	.412	.388	.396	.388	.452	.396	.388	.388	.37	.388	.388	.396
21.0	34.8	40.3	26.3	-13.5	-.3447	.396	.399	.391	.377	.406	.377	.434	.420	.384	.406	.37	.384	.391	.406
22.0	29.6	33.3	24.0	53.8	1.3692	.396	.401	.401	.380	.401	.380	.466	.412	.369	.412	.36	.391	.380	.391
23.0	35.3	41.0	26.6	-57.6	-1.4659	.396	.395	.402	.381	.402	.381	.436	.423	.374	.395	.38	.388	.381	.416
24.0	33.2	38.2	25.6	17.7	.4492	.396	.391	.399	.375	.423	.367	.438	.423	.375	.407	.37	.383	.383	.415
25.0	31.2	35.4	24.7	21.5	.5477	.396	.382	.410	.391	.419	.363	.456	.419	.363	.401	.36	.401	.373	.410
26.0	35.3	41.0	26.6	-38.8	-.9872	.396	.385	.406	.385	.420	.364	.441	.420	.357	.399	.37	.399	.378	.420
27.0	32.2	36.8	25.1	27.7	.7056	.396	.397	.397	.388	.431	.354	.448	.423	.354	.406	.36	.397	.380	.414
28.0	30.3	34.2	24.3	21.9	.5581	.396	.400	.400	.390	.430	.350	.470	.420	.350	.400	.36	.400	.370	.410
29.0	33.4	38.5	25.7	-33.5	-.8526	.396	.392	.400	.384	.423	.361	.455	.423	.361	.392	.36	.392	.377	.423
30.0	33.4	38.5	25.7	0.0	0.0000	.396	.398	.405	.382	.429	.358	.452	.413	.358	.405	.36	.390	.382	.413
31.0	29.4	33.0	24.0	45.0	1.1436	.396	.389	.411	.389	.433	.334	.466	.411	.367	.411	.35	.400	.378	.411
32.0	28.7	32.1	23.7	10.7	.2719	.396	.394	.429	.394	.441	.346	.477	.394	.370	.394	.37	.382	.370	.394
33.0	33.4	38.5	25.7	-55.0	-1.3981	.396	.402	.417	.386	.425	.363	.441	.410	.371	.394	.37	.386	.371	.410
34.0	35.1	40.8	26.5	-14.7	-.3744	.396	.402	.416	.374	.423	.367	.430	.416	.367	.402	.38	.381	.381	.409
35.0	28.9	32.3	23.8	65.8	1.6735	.396	.406	.453	.370	.453	.370	.453	.406	.346	.394	.38	.370	.358	.394
36.0	32.7	37.4	25.5	-46.2	-1.1758	.396	.403	.429	.378	.445	.378	.437	.395	.353	.395	.38	.370	.370	.412
37.0	30.1	33.9	24.3	29.3	.7459	.396	.405	.436	.384	.457	.363	.447	.405	.343	.384	.38	.374	.363	.405
38.0	35.1	40.7	26.6	-49.8	-1.2658	.396	.401	.415	.394	.436	.365	.436	.408	.365	.379	.38	.379	.379	.408
39.0	28.2	31.2	23.7	75.9	1.9313	.396	.423	.464	.396	.464	.356	.491	.383	.343	.356	.38	.356	.356	.383
40.0	33.2	38.0	26.0	-61.6	-1.5666	.396	.416	.441	.383	.433	.366	.441	.400	.358	.375	.39	.358	.375	.416
41.0	31.5	35.7	25.1	17.6	.4482	.396	.404	.442	.385	.432	.366	.451	.404	.356	.375	.38	.366	.375	.413
42.0	30.3	34.0	24.6	14.6	.3701	.396	.401	.454	.370	.444	.370	.465	.401	.338	.370	.40	.359	.370	.412
43.0	31.0	35.0	24.9	-8.6	-.2184	.396	.395	.454	.375	.444	.345	.464	.405	.335	.375	.38	.365	.375	.435
44.0	32.5	37.1	25.6	-16.9	-.4304	.396	.403	.447	.377	.447	.351	.447	.412	.342	.368	.40	.351	.368	.438
45.0	29.8	33.3	24.4	32.2	.8200	.396	.415	.460	.371	.449	.326	.460	.404	.337	.371	.40	.348	.371	.438
46.0	33.6	38.4	26.1	-41.8	-1.0622	.396	.416	.432	.375	.432	.343	.424	.416	.351	.375	.39	.359	.383	.448
47.0	29.3	32.6	24.2	48.9	1.2431	.396	.419	.455	.360	.443	.312	.455	.419	.336	.372	.39	.360	.384	.443
48.0	32.5	37.0	25.7	-39.5	-1.0047	.396	.402	.429	.367	.420	.323	.429	.429	.358	.385	.39	.367	.394	.455
49.0	30.3	34.0	24.6	25.4	.6464	.396	.406	.427	.364	.417	.310	.438	.438	.353	.385	.39	.374	.396	.449
50.0	33.4	38.2	26.1	-33.5	-.8526	.396	.405	.414	.356	.414	.331	.430	.430	.356	.397	.39	.372	.397	.455

(Table continues)

UNCLASSIFIED

Table 5D — Inferred Pressurant Distribution, Scaling Run 106: Test Configuration 3 (Continued)

INFERRED PRESSURANT DISTRIBUTION - 5 C METER CHAMBER OBSTRUCTED GAS MIXI

TIME (SEC)	TEMP(DEG C) MEAN	AIR	PRESSURANT	BETA	BETA/TSTAR	PRESSURANT FRACTION MEAN	I = 1	2	3	4	5	6	7	8	9	10	11	12	13
VALVE FULLY CLOSED																			
51.0	28.1	30.9	23.8	65.8	1.6746	.396	.417	.431	.361	.445	.290	.459	.431	.318	.389	.38	.375	.389	.459
52.0	32.7	37.2	25.9	-59.9	-1.5244	.396	.406	.415	.371	.415	.326	.441	.424	.344	.406	.37	.371	.406	.450
53.0	28.2	31.1	23.9	57.1	1.4516	.396	.434	.420	.351	.434	.295	.461	.434	.309	.392	.39	.378	.392	.461
54.0	31.5	35.5	25.4	-45.2	-1.1507	.396	.414	.424	.355	.424	.325	.433	.424	.335	.404	.38	.384	.394	.453
55.0	27.7	30.4	23.7	54.4	1.3827	.396	.421	.436	.346	.436	.286	.466	.421	.331	.391	.39	.361	.406	.466
56.0	31.2	35.0	25.2	-50.7	-1.2894	.396	.413	.423	.352	.423	.321	.454	.403	.362	.403	.38	.372	.403	.443
57.0	30.0	33.4	24.7	15.2	.3865	.396	.423	.423	.366	.434	.309	.457	.400	.366	.400	.38	.366	.400	.423
58.0	31.5	35.5	25.4	-19.1	-.4862	.396	.417	.417	.377	.427	.328	.456	.397	.377	.387	.38	.358	.387	.437
59.0	30.1	33.7	24.7	16.8	.4276	.396	.436	.414	.380	.436	.313	.470	.391	.369	.380	.38	.369	.380	.436
60.0	33.6	38.2	26.4	-37.2	-.9474	.396	.420	.411	.377	.420	.335	.445	.403	.369	.394	.39	.361	.394	.428
61.0	28.2	31.0	24.0	64.4	1.6392	.396	.440	.426	.369	.440	.312	.483	.383	.369	.383	.39	.355	.383	.412
62.0	33.2	37.7	26.4	-61.6	-1.5666	.396	.423	.405	.379	.423	.335	.440	.405	.379	.388	.39	.361	.396	.423
63.0	27.5	30.0	23.8	73.3	1.8632	.396	.441	.441	.360	.457	.296	.489	.377	.377	.377	.40	.344	.393	.393
64.0	32.2	36.3	26.0	-64.3	-1.6352	.396	.426	.426	.367	.435	.328	.445	.396	.387	.387	.39	.348	.396	.416
65.0	27.0	29.2	23.7	74.1	1.8854	.396	.453	.453	.345	.453	.273	.489	.381	.381	.381	.41	.345	.381	.399
66.0	31.7	35.5	25.9	-69.3	-1.7634	.396	.423	.433	.371	.423	.329	.444	.392	.381	.381	.41	.350	.402	.412
67.0	28.2	30.9	24.2	47.1	1.1968	.396	.437	.452	.347	.452	.302	.467	.392	.377	.377	.40	.347	.392	.407
68.0	32.9	37.0	26.5	-58.6	-1.4908	.396	.425	.434	.377	.425	.330	.434	.396	.377	.387	.40	.349	.387	.425
69.0	30.1	33.4	25.1	31.0	.7878	.396	.426	.438	.366	.438	.318	.462	.390	.390	.378	.40	.342	.390	.414
70.0	31.0	34.6	25.5	-10.9	-.2761	.396	.417	.428	.372	.428	.317	.450	.395	.384	.372	.41	.350	.395	.428
71.0	30.6	34.1	25.4	4.2	.1069	.396	.422	.445	.376	.433	.319	.445	.388	.388	.376	.39	.353	.388	.422
72.0	27.4	29.7	23.8	51.5	1.3093	.396	.447	.464	.362	.447	.277	.481	.379	.379	.362	.41	.345	.396	.396
73.0	31.5	35.2	25.8	-60.8	-1.5473	.396	.428	.439	.375	.428	.311	.439	.396	.386	.375	.39	.354	.396	.428
74.0	29.8	33.0	24.9	21.5	.5461	.396	.434	.446	.371	.446	.297	.459	.384	.384	.371	.39	.347	.396	.421
75.0	30.6	34.1	25.4	-11.4	-.2888	.396	.424	.435	.378	.435	.309	.447	.378	.389	.378	.40	.355	.401	.424
76.0	30.6	34.1	25.4	0.0	0.0000	.396	.428	.428	.394	.428	.302	.451	.394	.394	.371	.39	.348	.405	.417
77.0	28.1	30.7	24.1	38.5	.9797	.396	.448	.433	.372	.448	.265	.479	.387	.402	.356	.40	.341	.402	.418
78.0	29.6	32.7	24.9	-25.1	-.6378	.396	.432	.444	.381	.432	.279	.457	.393	.406	.381	.39	.343	.406	.406
79.0	30.1	33.4	25.1	-7.1	-.1817	.396	.425	.437	.377	.425	.292	.461	.401	.413	.377	.38	.353	.401	.401
80.0	30.5	33.9	25.3	-4.5	-.1142	.396	.439	.428	.393	.428	.288	.451	.393	.393	.381	.40	.346	.393	.416
81.0	30.3	33.6	25.2	2.2	.0565	.396	.438	.438	.391	.426	.284	.462	.391	.391	.379	.39	.355	.391	.415
82.0	29.8	33.0	24.9	7.0	.1774	.396	.436	.436	.373	.436	.273	.461	.386	.398	.386	.39	.361	.386	.423
83.0	30.3	33.6	25.2	-7.0	-.1774	.396	.426	.426	.391	.438	.272	.474	.391	.391	.379	.39	.355	.403	.415
84.0	27.4	29.7	23.8	47.4	1.2047	.396	.454	.437	.369	.454	.232	.505	.386	.403	.369	.38	.369	.403	.386
85.0	30.6	34.1	25.4	-51.5	-1.3093	.396	.430	.418	.384	.430	.280	.465	.395	.395	.372	.38	.372	.407	.418
86.0	29.4	32.5	24.8	16.3	.4139	.396	.443	.430	.378	.430	.275	.469	.404	.391	.365	.39	.365	.391	.417
87.0	30.6	34.1	25.4	-16.3	-.4139	.396	.432	.420	.386	.432	.282	.466	.397	.386	.374	.39	.363	.397	.420
88.0	30.3	33.6	25.2	4.4	.1117	.396	.442	.430	.395	.430	.276	.466	.395	.383	.371	.39	.359	.395	.418
89.0	26.2	28.0	23.4	74.2	1.8881	.396	.498	.476	.366	.476	.168	.520	.388	.366	.344	.41	.344	.410	.388
90.0	32.2	36.1	26.3	-92.3	-2.3472	.396	.429	.429	.398	.429	.286	.459	.398	.378	.378	.39	.357	.398	.418
91.0	28.2	30.8	24.3	52.2	1.3286	.396	.456	.441	.395	.456	.227	.487	.395	.365	.365	.39	.365	.395	.410
92.0	31.7	35.4	26.0	-47.1	-1.1968	.396	.431	.431	.399	.431	.281	.463	.399	.367	.377	.39	.356	.399	.420
93.0	27.5	29.9	24.0	59.3	1.5084	.396	.471	.454	.386	.454	.215	.505	.386	.369	.369	.40	.352	.386	.403
94.0	30.5	33.8	25.5	-46.1	-1.1715	.396	.433	.445	.396	.445	.264	.469	.396	.360	.372	.40	.360	.384	.420
95.0	30.5	33.8	25.5	0.0	0.0000	.396	.438	.438	.390	.438	.269	.474	.402	.366	.366	.40	.366	.390	.414
96.0	26.2	27.9	23.5	76.1	1.9363	.396	.477	.477	.409	.477	.158	.545	.386	.363	.340	.40	.363	.386	.363
97.0	30.5	33.7	25.6	-76.1	-1.9363	.396	.444	.432	.394	.432	.270	.469	.407	.370	.370	.39	.357	.407	.407
98.0	29.4	32.3	25.1	14.1	.3590	.396	.460	.446	.391	.432	.253	.487	.405	.377	.364	.39	.350	.391	.405
99.0	31.0	34.3	25.9	-20.4	-.5199	.396	.448	.436	.389	.425	.271	.472	.401	.365	.365	.41	.354	.401	.413
100.0	30.0	33.0	25.3	13.2	.3350	.396	.440	.440	.401	.427	.258	.493	.401	.375	.362	.40	.349	.401	.401

Table 5E — Inferred Pressurant Distribution, Scaling Run 107: Test Configuration 3

INFERRED PRESSURANT DISTRIBUTION - 5 C METER CHAMBER OBSTRUCTED GAS MIXI

TIME (SEC)	TEMP(DEG C) MEAN	AIR	PRESSURANT	BETA	BETA/TSTAR	PRESSURANT FRACTION MEAN	I = 1	2	3	4	5	6	7	8	9	10	11	12	13
CONMENCE VALVE OPENING																			
0.0	25.6	25.6	12.1	.6	0.0000	0.000	0.000	0.000	0.000	0.000	0.000	0.000	0.000	0.000	0.000	0.00	0.000	0.000	
1.0	28.9	29.1	25.9	62.1	2.7990	.044	.146	.178	.715	.209	.273	-.296	.367	-.518	-.133	-.17	-.138	-.138	.083
VALVE FULLY OPEN																			
2.0	33.7	34.2	27.8	-3.2	-.1303	.082	.080	-.185	.018	-.138	.267	-.232	.329	-.060	.236	.14	.205	.158	.251
3.0	36.8	38.5	26.5	12.2	.8063	.141	.115	.023	.040	.015	.241	-.002	.266	.107	.249	.16	.224	.174	.216
4.0	38.2	40.9	26.7	13.8	.8095	.190	.203	.097	.140	.125	.309	.118	.253	.161	.224	.16	.217	.224	.239
5.0	39.3	42.8	27.2	12.0	.5608	.227	.219	.167	.206	.174	.283	.174	.270	.212	.277	.21	.264	.245	.251
6.0	39.7	43.9	27.6	12.9	.5305	.258	.248	.223	.223	.236	.303	.211	.297	.242	.297	.25	.303	.260	.260
7.0	39.9	44.7	27.9	13.1	.4639	.284	.258	.246	.228	.252	.323	.234	.341	.299	.311	.27	.329	.293	.305
8.0	40.1	45.4	28.2	13.2	.5061	.311	.298	.252	.281	.269	.362	.287	.345	.333	.333	.29	.339	.328	.322
9.0	39.9	45.5	28.3	15.0	.3479	.327	.309	.268	.315	.291	.350	.309	.373	.350	.355	.29	.361	.338	.332
10.0	39.8	45.9	28.6	14.0	.5968	.355	.342	.307	.348	.313	.382	.354	.388	.371	.382	.33	.368	.354	.354
CONMENCE VALVE CLOSURE																			
11.0	39.5	46.0	28.8	14.7	.5082	.377	.356	.327	.362	.350	.402	.373	.420	.391	.408	.34	.414	.379	.373
12.0	39.3	45.8	29.0	7.2	.3317	.389	.371	.353	.382	.365	.418	.394	.412	.406	406	.37	.406	.388	.382
VALVE FULLY CLOSED																			
13.0	38.7	45.1	29.3	10.3	.4754	.403	.387	.393	.406	.393	.412	.400	.406	425	.419	.40	.406	.400	.387
14.0	32.4	36.2	26.7	34.5	1.5928	.403	.373	.384	.405	.394	.394	.415	.405	.446	.436	.38	.415	.405	.384
15.0	35.5	40.5	28.0	-20.1	-.9264	.403	.377	.369	.401	.393	.385	.401	.417	.449	.425	.36	.417	.425	.409
16.0	35.0	39.8	27.7	2.9	.1338	.403	.378	.378	.402	.394	.378	.394	.427	.452	.427	.36	.419	.411	.411
17.0	34.1	38.7	27.4	5.2	.2400	.403	.359	.377	.395	.413	.377	.395	.430	.448	.421	.37	.413	.413	.421
18.0	34.3	38.9	27.4	-1.1	-.0499	.403	.361	.378	.387	.404	.369	.396	.448	.448	.413	.36	.422	.422	.422
19.0	33.9	38.4	27.3	2.2	.1008	.403	.371	.380	.397	.406	.362	.406	.451	.442	.406	.38	.406	.406	.424
20.0	32.6	36.5	26.7	9.7	.4487	.403	.358	.368	.420	.399	.348	.430	.460	.440	.420	.34	.409	.409	.430
21.0	31.4	34.8	26.3	10.2	.4720	.403	.340	.375	.434	.387	.340	.422	.481	.445	.410	.32	.422	.410	.445
22.0	34.4	39.1	27.5	-22.9	-1.0570	.403	.371	.379	.422	.388	.353	.422	.448	.422	.414	.36	.405	.414	.439
23.0	30.8	34.0	26.1	27.7	1.2782	.403	.340	.352	.441	.390	.327	.416	.479	.454	.428	.32	.416	.416	.454
24.0	32.0	35.7	26.6	-11.1	-.5136	.403	.355	.366	.410	.388	.344	.432	.453	.442	.421	.33	.421	.421	.453
25.0	33.1	37.2	27.0	-8.0	-.3697	.403	.360	.370	.409	.389	.350	.429	.458	.429	.419	.34	.409	.419	.458
26.0	33.6	37.9	27.2	-3.6	-.1664	.403	.374	.374	.411	.420	.336	.420	.448	.411	.420	.33	.411	.420	.458
27.0	33.1	37.2	27.0	3.6	.1664	.403	.366	.366	.415	.415	.337	.435	.454	.415	.425	.32	.405	.415	.464
28.0	32.0	35.7	26.6	8.0	.3697	.403	.359	.381	.414	.403	.338	.425	.468	.414	.425	.31	.414	.414	.468
29.0	33.1	37.2	27.0	-8.0	-.3697	.403	.371	.381	.420	.401	.352	.430	.460	.401	.411	.33	.401	.420	.460
30.0	31.2	34.5	26.2	15.7	.7222	.403	.361	.361	.422	.397	.349	.446	.458	.397	.422	.31	.422	.422	.470
31.0	34.8	39.6	27.7	-26.4	-1.2188	.403	.371	.379	.404	.396	.371	.430	.446	.396	.421	.34	.413	.413	.455
32.0	30.5	33.5	26.1	33.0	1.5216	.403	.342	.382	.409	.409	.342	.450	.463	.396	.409	.32	.423	.409	.477
33.0	32.9	36.9	27.0	-21.3	-.9839	.403	.349	.379	.409	.399	.359	.429	.460	.389	.419	.34	.419	.409	.470
34.0	31.7	35.2	26.5	9.7	.4479	.403	.347	.382	.405	.405	.359	.428	.451	.393	.416	.34	.416	.416	.474
35.0	29.3	31.7	25.7	26.6	1.2249	.403	.312	.412	.412	.395	.362	.445	.462	.379	.429	.31	.412	.429	.478
36.0	31.4	34.7	26.4	-23.6	-1.0879	.403	.327	.399	.399	.399	.375	.411	.460	.387	.423	.35	.423	.411	.472
37.0	33.8	38.1	27.4	-18.7	-.8626	.403	.353	.399	.409	.418	.381	.409	.437	.390	.409	.37	.409	.399	.455
38.0	34.3	38.8	27.6	-3.3	-.1528	.403	.352	.406	.415	.424	.388	.415	.433	.397	.406	.36	.397	.406	.442
39.0	30.8	33.9	26.2	26.7	1.2323	.403	.329	.407	.433	.433	.368	.433	.433	.381	.407	.35	.394	.407	.459
40.0	29.1	31.5	25.7	21.2	.9776	.403	.320	.424	.424	.424	.372	.442	.424	.390	.407	.35	.372	.390	.494
41.0	27.8	29.4	25.3	26.2	1.2066	.403	.321	.420	.420	.445	.371	.445	.420	.346	.420	.37	.371	.395	.495
42.0	31.9	35.5	26.5	-52.9	-2.4416	.403	.354	.421	.399	.410	.388	.410	.432	.377	.410	.38	.388	.399	.465
43.0	33.1	37.2	27.0	-9.5	-.4367	.403	.354	.403	.413	.413	.383	.413	.423	.393	.413	.38	.393	.393	.462
44.0	32.2	36.0	26.6	6.6	.3043	.403	.352	.395	.416	.405	.384	.416	.427	.405	.416	.39	.384	.395	.448
45.0	31.2	34.5	26.2	9.1	.4216	.403	.354	.414	.414	.414	.366	.414	.426	.390	.414	39	.378	.390	.474
46.0	30.2	33.0	25.9	11.0	.5072	.403	.324	.421	.407	.407	.351	.407	.421	.393	.421	.39	.393	.407	.491
47.0	28.1	29.9	25.4	31.6	1.4581	.403	.263	.416	.416	.395	.329	.416	.460	.416	.416	.37	.395	.416	.526
48.0	28.4	30.5	25.4	-7.0	-.3210	.403	.285	.405	.405	.385	.305	.405	.464	.444	.425	.38	.405	.405	.524
49.0	31.7	35.3	26.4	-39.5	-1.8217	.403	.338	.406	.394	.406	.349	.394	.440	.417	.417	.39	.394	.406	.485
50.0	32.6	36.5	26.8	-7.1	-.3283	.403	.348	.399	.389	.409	.348	.399	.440	.420	.409	.38	.399	.420	.471

(Table continues)

UNCLASSIFIED

Table 5E — Inferred Pressurant Distribution, Scaling Run 107: Test Configuration 3 (Continued)

INFERRED PRESSURANT DISTRIBUTION - 5 C METER CHAMBER OBSTRUCTED GAS MIXI

TIME (SEC)	TEMP(DEG C) MEAN	AIR	PRESSURANT	BETA	BETA/TSTAR	PRESSURANT FRACTION MEAN	I = 1	2	3	4	5	6	7	8	9	10	11	12	13
VALVE FULLY CLOSED																			
51.0	32.7	36.7	26.8	-1.3	-.0609	.403	.355	.395	.385	.415	.355	.395	.436	.415	.415	.38	.405	.415	.466
52.0	33.4	37.7	27.1	-5.0	-.2295	.403	.362	.399	.380	.409	.362	.399	.437	.409	.409	.39	.409	.416	.456
53.0	31.5	35.0	26.4	14.9	.6862	.403	.342	.389	.377	.400	.342	.400	.447	.423	.423	.38	.412	.423	.470
54.0	29.8	32.5	25.8	18.3	.8453	.403	.331	.390	.376	.405	.346	.390	.450	.435	.420	.37	.420	.420	.479
55.0	29.6	32.3	25.7	2.3	.1039	.403	.324	.401	.370	.401	.340	.385	.446	.446	.416	.38	.416	.431	.477
56.0	29.1	31.5	25.6	7.4	.3398	.403	.324	.391	.358	.391	.324	.375	.459	.459	.425	.37	.425	.442	.492
57.0	29.0	31.3	25.5	2.7	.1245	.403	.310	.398	.345	.398	.328	.380	.467	.467	.433	.36	.415	.433	.502
58.0	27.9	29.7	25.3	19.6	.9050	.403	.307	.375	.352	.421	.307	.375	.466	.466	.443	.35	.398	.443	.534
59.0	30.2	33.1	25.9	-35.1	-1.6189	.403	.337	.392	.378	.420	.337	.392	.434	.434	.420	.39	.392	.434	.476
60.0	32.6	36.5	26.7	-22.6	-1.0425	.403	.357	.398	.387	.418	.357	.387	.438	.428	.408	.38	.398	.418	.459
61.0	29.8	32.3	25.8	26.6	1.2280	.403	.331	.405	.391	.435	.331	.405	.435	.435	.420	.39	.39[illegible]	.420	.450
62.0	28.1	29.9	25.3	27.7	1.2771	.403	.309	.418	.396	.440	.309	.396	.440	.440	.440	.37	.375	.4[illegible]0	.462
63.0	30.8	34.0	26.1	-38.4	-1.7719	.403	.334	.410	.410	.410	.347	.410	.422	.422	.422	.39	.365	.422	.448
64.0	29.8	32.5	25.8	11.8	.5440	.403	.327	.415	.415	.430	.342	.415	.415	.430	.415	.38	.386	.415	.445
65.0	29.8	32.5	25.8	0.0	0.0000	.403	.335	.409	.409	.438	.350	.423	.409	.423	.409	.39	.379	.409	.453
66.0	29.5	32.0	25.7	4.6	.2121	.403	.334	.413	.413	.428	.334	.413	.413	.428	.413	.39	.381	.413	.460
67.0	31.2	34.5	26.2	-19.7	-.9067	.403	.355	.403	.403	.439	.343	.403	.415	.427	.403	.40	.391	.403	.451
68.0	26.7	27.1	26.2	72.0	3.3207	.403	.041	.459	.355	.669	-.064	.459	.459	.668	.459	.35	.355	.459	.564
69.0	31.4	32.7	29.3	-72.9	-3.3625	.403	.307	.423	.394	.481	.249	.394	.452	.452	.423	.39	.365	.394	.510
70.0	29.3	30.3	27.8	23.6	1.0879	.403	.289	.409	.409	.490	.208	.449	.449	.449	.449	.36	.329	.449	.490
71.0	30.7	31.9	28.8	-17.0	-.7820	.403	.302	.430	.398	.462	.270	.430	.430	.430	.430	.39	.334	.398	.526
72.0	29.1	30.1	27.7	19.5	.8974	.403	.259	.467	.384	.509	.217	.425	.467	.425	.425	.42	.301	.425	.509
73.0	30.3	31.5	28.6	-15.8	-.7269	.403	.268	.437	.403	.470	.268	.403	.437	.437	.437	.43	.336	.403	.504
74.0	31.0	32.3	29.1	-7.3	-.3382	.403	.293	.445	.384	.445	.293	.415	.445	.445	.445	.41	.323	.415	.476
75.0	30.8	32.1	28.9	1.7	.0805	.403	.278	.434	.403	.434	.278	.403	.466	.434	.434	.40	.340	.434	.497
76.0	27.8	28.4	26.8	45.2	2.0858	.403	.233	.486	.359	.486	.106	.422	.486	.486	.486	.42	.296	.486	.486
77.0	30.7	31.9	28.9	-43.7	-2.0166	.403	.297	.431	.398	.431	.264	.398	.431	.465	.431	.39	.364	.431	.498
78.0	28.3	29.0	27.2	33.6	1.5504	.403	.224	.441	.386	.441	.170	.386	.495	.549	.441	.44	.332	.441	.495
79.0	30.5	31.7	28.8	-31.9	-1.4723	.403	.312	.416	.382	.451	.243	.416	.451	.486	.416	.41	.347	.416	.486
80.0	29.3	30.2	27.9	15.1	.6979	.403	.285	.413	.370	.455	.243	.413	.455	.498	.413	.41	.328	.455	.498
81.0	30.2	31.3	28.5	-11.3	-.5192	.403	.307	.454	.381	.454	.234	.417	.454	.454	.381	.45	.307	.417	.527
82.0	28.8	29.6	27.5	19.2	.8859	.403	.275	.465	.370	.465	.180	.418	.465	.513	.418	.41	.323	.418	.513
83.0	31.4	32.7	29.4	-31.2	-1.4382	.403	.301	.424	.363	.455	.270	.394	.455	.455	.394	.45	.332	.424	.517
84.0	27.8	28.3	26.9	49.3	2.2752	.403	.224	.429	.292	.567	.155	.361	.498	.566	.429	.49	.292	.429	.498
85.0	29.8	30.8	28.4	-35.0	-1.6151	.403	.310	.435	.351	.477	.226	.393	.477	.477	.393	.43	.351	.393	.519
86.0	30.0	31.0	28.5	-2.2	-.0997	.403	.297	.419	.378	.500	.215	.419	.459	.459	.378	.45	.337	.419	.500
87.0	27.8	28.3	26.9	36.9	1.7039	.403	.183	.392	.392	.602	.043	.462	.602	.462	392	.46	.253	.462	.532
88.0	31.7	33.0	29.8	-51.8	-2.3884	.403	.290	.418	.386	.481	.258	.418	.481	.418	.386	.45	.322	.418	.513
89.0	30.0	31.0	28.5	17.7	.8177	.403	.328	.409	.369	.490	.207	.409	.531	.409	.369	.45	.328	.409	.531
90.0	27.4	27.9	26.7	45.0	2.0748	.403	.221	.466	.466	547	-.023	.466	.547	.466	384	.46	.221	.466	.547
91.0	29.8	30.7	28.4	-43.2	-1.9915	.403	.286	.460	.416	.460	.199	.460	.504	.416	.373	.41	.329	.416	.504
92.0	30.3	31.3	28.8	-6.2	-.2876	.403	.317	.437	.437	.437	.196	.437	.477	.437	.357	.43	.317	.437	.517
93.0	30.3	31.3	28.8	0.0	0.0000	.403	.314	.434	.434	.474	.193	.434	.474	.394	.394	.43	.314	.434	.514
94.0	29.8	30.7	28.4	6.2	.2876	.403	.282	.457	.457	.457	.195	.457	.457	.413	.369	.41	.326	.457	.500
95.0	29.0	29.7	27.8	12.3	.5662	.403	.304	.458	.458	.510	.150	.458	.458	.407	.356	.40	.356	.407	.510
96.0	29.3	30.1	28.0	-5.3	-.2430	.403	.259	.451	.451	.499	.164	.451	.451	.403	.403	.45	.307	.451	.499
97.0	31.9	33.1	30.0	-28.0	-1.2898	.403	.320	.418	.418	.451	.223	.451	.451	.418	.385	.41	.353	.418	.516
98.0	29.3	30.1	28.1	28.0	1.2898	.403	.322	.418	.418	.466	.177	.466	.418	.466	.418	.41	.322	.418	.514
99.0	29.1	29.9	27.9	2.6	.1187	.403	.300	.399	.399	.499	.151	.449	.449	.449	.349	.44	.349	.449	.548
100.0	31.4	32.5	29.6	-26.0	-1.2004	.403	.315	.384	.384	.489	.245	.419	.419	.454	.384	.41	.349	.454	.523

Table 5F — Inferred Pressurant Distribution, Scaling Run 113: Test Configuration 3

INFERRED PRESSURANT DISTRIBUTION - 5 C METER CHAMBER OBSTRUCTED GAS MIXI

TIME (SEC)	TEMP(DEG C) MEAN	AIR	PRESSURANT	BETA	BETA/TSTAR	PRESSURANT FRACTION MEAN I = 1	2	3	4	5	6	7	8	9	10	11	12	13
COMMENCE VALVE OPENING																		
0.0	26.0	26.0	-25.8	.3	0.0000	0.000	0.000	0.000	0.000	0.000	0.000	0.000	0.000	0.000	0.00	0.000	0.000	
1.0	26.9	26.8	18.3	1024	7-11.7080	-.011	.108	.097	.097	.097	.097	.085	.003	-.173	-.114	-.23	-.067	-.079	-.067
VALVE FULLY OPEN																		
2.0	31.8	32.1	25.7	12.4	.6546	.041	.163	.257	.726	.241	.335	.007	.038	-.572	-.103	-.22	-.056	-.196	-.087
3.0	35.6	36.3	26.8	1.5	.0570	.075	-.008	-.029	.527	-.071	.118	-.102	.171	-.081	.139	.02	.181	.034	.076
4.0	37.9	39.8	26.5	14.9	1.1040	.142	.120	.112	.428	.075	.180	.059	.165	.067	.165	.04	.187	.112	.127
5.0	39.3	42.2	27.3	13.2	.8017	.192	.164	.144	.379	.137	.224	.130	.171	.137	.211	.15	.258	.191	.198
6.0	40.3	43.9	27.9	10.6	.3728	.220	.201	.182	.345	.176	.226	.169	.282	.201	.251	.06	.295	.226	.251
7.0	40.9	45.2	28.4	12.0	.5186	.253	.282	.252	.348	.246	.270	.246	-.022	.270	.282	.25	.312	.276	.276
8.0	40.6	45.2	28.5	16.1	.4567	.274	.276	.234	.312	.240	.282	.258	.294	.258	.288	.25	.330	.264	.270
9.0	40.7	45.8	28.9	13.5	.5120	.301	.314	.267	.332	.273	.308	.285	.320	.303	.320	.27	.338	.291	.285
10.0	40.6	46.1	29.2	14.2	.5791	.329	.312	.312	.335	.306	.330	.294	.371	.330	.353	.31	.377	.312	.330
COMMENCE VALVE CLOSURE																		
11.0	40.6	46.5	29.5	13.7	.3927	.348	.330	.330	.348	.330	.342	.330	.400	.289	.383	.33	.383	.359	.365
12.0	40.6	46.7	30.1	-36.6	.4154	.367	.370	.364	.370	.358	.382	.364	.105	.413	.413	.38	.437	.407	.401
VALVE FULLY CLOSED																		
13.0	40.2	46.1	30.3	-27.0	.3067	.376	.372	.372	.359	.378	.378	.359	.156	.416	.429	.39	.454	.410	.416
14.0	44.2	51.3	32.4	53.8	-.6113	.376	.367	.362	.351	.367	.367	.362	.430	.420	.420	.16	.441	.415	.420
15.0	39.7	45.5	30.1	-61.8	.7023	.376	.366	.366	.334	.366	.366	.366	.438	.438	.386	.38	.445	.425	.204
16.0	39.8	45.7	30.2	2.7	-.0312	.376	.348	.361	.309	.355	.348	.368	.432	.374	.413	.36	.432	.393	.387
17.0	40.7	46.8	30.6	13.2	-.1505	.376	.353	.384	.322	.365	.359	.377	.439	.414	.198	.38	.439	.439	.414
18.0	39.8	45.7	30.2	-13.2	.1505	.376	.337	.357	.299	.350	.331	.350	.421	.421	.402	.35	.434	.428	.402
19.0	35.9	40.4	28.3	-73.3	.8327	.376	.332	.349	.283	.324	.307	.340	.439	.439	.415	.35	.439	.456	.406
20.0	41.6	47.9	31.0	98.1	-1.1141	.376	.333	.357	.315	.339	.327	.345	.428	.410	.404	.36	.416	.434	.416
21.0	38.6	44.1	29.6	-45.6	.5179	.376	.329	.363	.308	.343	.322	.356	.446	.411	.418	.37	.356	.446	.418
22.0	37.1	42.1	28.8	-28.7	.3258	.376	.361	.399	.346	.368	.353	.399	.474	-.048	.444	.39	.474	.482	.437
23.0	39.5	45.2	30.0	43.1	-.4892	.376	.346	.372	.326	.359	.333	.372	.438	.424	.431	.39	.438	.457	.195
24.0	35.5	40.0	28.2	-75.5	.8575	.376	.320	.362	.303	.320	.295	.345	.421	.413	.421	.37	.430	.464	.413
25.0	38.3	43.6	29.4	55.4	-.6294	.376	.327	.369	.313	.327	.313	.355	.419	.405	.405	.38	.419	.447	.405
26.0	39.2	44.8	29.8	14.9	-.1688	.376	.324	.357	.317	.324	.311	.357	.431	.404	.398	.37	.418	.458	.411
27.0	39.7	45.4	30.1	8.5	-.0961	.376	.317	.363	.317	.324	.317	.350	.428	.395	.409	.37	.415	.461	.415
28.0	38.8	44.3	29.7	-14.3	.1622	.376	.312	.360	.319	.326	.319	.353	.422	.401	.401	.38	.422	.456	.415
29.0	37.6	42.7	29.1	-21.7	.2463	.376	.307	.358	.314	.307	.307	.344	.417	.410	.410	.38	.424	.483	.417
30.0	39.3	45.0	29.9	30.3	-.3446	.376	.313	.366	.319	.313	.319	.352	.419	.399	.406	.38	.412	.472	.412
31.0	36.9	41.8	28.8	-43.7	.4961	.376	.299	.376	.322	.307	.307	.361	.399	.422	.407	.34	.414	.499	.430
32.0	40.7	46.8	30.6	64.9	-.7377	.376	.300	.367	.324	.318	.318	.361	.398	.423	.392	.40	.392	.479	.411
33.0	39.3	45.0	29.9	-21.6	.2452	.376	.336	.409	.349	.349	.349	.389	.422	.330	.369	.43	.416	.296	.436
34.0	39.5	45.2	30.0	2.8	-.0320	.376	.312	.377	.325	.318	.312	.358	.391	.410	.384	.41	.391	.476	.417
35.0	35.7	40.2	28.2	-71.7	.8142	.376	.327	.419	.344	.335	.319	.386	.419	.444	.152	.44	.419	.503	.377
36.0	35.4	39.8	28.1	-7.9	.0900	.376	.302	.396	.328	.311	.302	.371	.396	.414	.388	.43	.328	.508	.414
37.0	39.0	44.5	29.8	71.0	-.8070	.376	.319	.393	.339	.332	.305	.366	.386	.393	.380	.42	.380	.467	.407
38.0	37.6	42.7	29.1	-24.6	.2795	.376	.334	.407	.348	.341	.312	.392	.385	.378	.385	.34	.385	.473	.407
39.0	34.2	38.1	27.6	-76.5	.8688	.376	.343	.438	.362	.343	.305	.419	.391	.428	.400	.46	.087	.485	.419
40.0	33.8	37.7	27.4	-9.5	.1074	.376	.314	.412	.353	.324	.285	.402	.383	.402	.353	.43	.353	.471	.402
41.0	39.2	44.8	29.8	111.7	-1.2694	.376	.388	.462	.415	.402	.368	.448	-.052	.428	.402	.45	.388	.442	.342
42.0	39.5	45.2	30.0	5.7	-.0645	.376	.365	.417	.378	.365	.339	.411	.404	.398	.286	.38	.378	.437	.326
43.0	36.1	40.7	28.4	-64.2	.7294	.376	.352	.442	.385	.368	.328	.417	.255	.377	.377	.40	.344	.433	.401
44.0	33.8	37.7	27.4	-55.0	.6243	.376	.343	.440	.372	.362	.314	.401	.343	.421	.314	.41	.362	.450	.353
45.0	33.6	37.4	27.3	-4.9	.0555	.376	.390	.459	.400	.390	.330	.419	.419	.409	.370	.49	.033	.409	.360
46.0	37.4	42.5	29.0	87.1	-.9901	.376	.358	.409	.373	.365	.328	.387	.350	.395	.350	.43	.343	.439	.350
47.0	39.0	44.6	29.7	27.9	-.3167	.376	.354	.408	.367	.360	.333	.381	.367	.313	.374	.43	.374	.435	.387
48.0	38.6	44.1	29.6	-5.9	.0671	.376	.379	.440	.399	.392	.358	.413	.420	.358	.324	.42	.262	.303	.420
49.0	34.7	38.8	27.8	-81.6	.9266	.376	.370	.443	.407	.379	.334	.425	.063	.398	.398	.40	.388	.470	.407
50.0	34.0	37.9	27.5	-18.1	.2060	.376	.343	.420	.382	.363	.324	.401	.257	.430	.363	.40	.353	.468	.382

(Table continues)

UNCLASSIFIED

Table 5F — Inferred Pressurant Distribution, Scaling Run 113: Test Configuration 3 (Continued)

INFERRED PRESSURANT DISTRIBUTION - 5 C METER CHAMBER OBSTRUCTED GAS MIXI

TIME (SEC)	TEMP(DEG C) MEAN	AIR	PRESSURANT	BETA	BETA/TSTAR	PRESSURANT FRACTION MEAN I = 1	2	3	4	5	6	7	8	9	10	11	12	13
VALVE FULLY CLOSED																		
51.0	33.3	37.0	27.2	-19.8	.2244	.376	.348	.399	.368	.348	.317	.399	.378	.419	.368	.41	.348	.399	.378
52.0	34.8	39.1	27.8	42.1	-.4782	.376	.340	.393	.375	.357	.313	.384	.384	.420	.366	.31	.375	.464	.402
53.0	37.8	43.0	29.2	62.3	-.7077	.376	.358	.409	.387	.373	.344	.402	.394	.423	.329	.20	.394	.452	.416
54.0	39.2	44.8	29.8	24.3	-.2757	.376	.386	.433	.406	.400	.373	.420	.426	.426	.400	.42	.406	-.055	.440
55.0	36.2	40.9	28.5	-55.0	.6245	.376	.409	.466	.433	.425	.385	.457	-.217	.209	.433	.48	.433	.506	.466
56.0	33.6	37.4	27.4	-63.4	.7204	.376	.374	.444	.414	.384	.345	.434	.424	.454	.394	-.06	.404	.484	.394
57.0	36.1	40.7	28.4	59.8	-.6789	.376	.338	.403	.371	.347	.314	.387	.371	.403	.363	.42	.371	.420	.379
58.0	41.9	48.4	31.2	99.0	-1.1250	.376	.375	.416	.398	.381	.363	.410	.387	.422	.381	.28	.247	.422	.404
59.0	38.3	43.7	29.4	-56.3	.6398	.376	.357	.399	.378	.357	.336	.392	.371	.350	.371	.41	.343	.427	.392
60.0	33.3	36.9	27.2	-111.8	1.2707	.376	.493	.565	.524	.503	.462	.534	.503	-.714	.503	.57	-.188	.585	.544
61.0	34.0	37.9	27.5	19.8	-.2244	.376	.459	.537	.488	.469	.440	.508	-.227	.305	-.150	.54	.488	.546	.479
62.0	37.1	42.0	28.9	71.3	-.8100	.376	.455	.508	.478	.463	.432	.486	.478	.508	.447	.51	.425	-.612	.303
63.0	37.4	42.5	29.1	6.7	-.0763	.376	.355	.415	.385	.370	.340	.385	.393	.407	.221	.43	.370	.415	.400
64.0	33.8	37.6	27.5	-82.4	.9366	.376	.450	.529	.480	.460	.430	.480	.470	.519	.460	.53	.460	.529	-.917
65.0	33.5	37.2	27.3	-9.9	.1122	.376	.346	.417	.367	.356	.316	.377	.377	.417	.336	.38	.356	.438	.397
66.0	34.5	38.6	27.8	28.4	-.3222	.376	.369	.424	.387	.369	.332	.387	.397	.406	.202	.45	.369	.387	.406
67.0	38.8	44.3	29.7	88.7	-1.0072	.376	.373	.415	.387	.373	.346	.380	.394	.415	.229	.42	.305	.428	.415
68.0	35.0	39.3	28.0	-76.2	.8654	.376	.347	.400	.382	.355	.320	.364	.373	.409	.347	.42	.364	.426	.373
69.0	34.8	39.0	27.9	-4.2	.0481	.376	.341	.404	.377	.359	.314	.377	.368	.404	.350	.42	.368	.431	.377
70.0	34.7	38.8	27.8	-4.3	.0490	.376	.351	.415	.379	.370	.333	.388	.361	.397	.351	.40	.324	.433	.379
71.0	31.7	34.8	26.7	-89.0	1.0106	.376	.343	.417	.380	.367	.318	.392	.355	.404	.318	.44	.367	.441	.343
72.0	38.3	43.7	29.4	159.1	-1.8077	.376	.355	.405	.376	.376	.341	.384	.376	.341	.369	.41	.362	.412	.369
73.0	34.0	37.9	27.5	-93.2	1.0583	.376	.397	.455	.417	.417	.369	.417	.359	.426	.397	.45	.407	-.026	.397
74.0	35.7	40.2	28.2	42.7	-.4849	.376	.356	.406	.381	.373	.331	.373	.381	.381	.356	.40	.356	.406	.381
75.0	35.5	40.0	28.2	-3.9	.0446	.376	.363	.414	.388	.380	.338	.388	.363	.397	.363	.43	.380	.295	.388
76.0	33.3	37.0	27.2	-58.3	.6625	.376	.374	.415	.385	.374	.323	.385	.395	.385	.354	.30	.385	.426	.385
77.0	38.0	43.2	29.2	106.0	-1.2042	.376	.371	.400	.378	.371	.335	.371	.378	.385	.349	.40	.371	.400	.371
78.0	34.0	37.9	27.5	-87.2	.9905	.376	.386	.424	.395	.386	.337	.386	.395	.347	.357	.43	.280	.366	.395
79.0	36.4	41.1	28.6	57.5	-.6535	.376	.374	.406	.382	.382	.326	.382	.358	.374	.350	.40	.366	.398	.382
80.0	35.7	40.2	28.2	-15.0	.1708	.376	.374	.407	.391	.382	.341	.382	.374	.399	.349	.42	.366	.366	.332
81.0	35.0	39.3	27.9	-16.1	.1833	.376	.370	.405	.387	.370	.335	.379	.361	.387	.343	.41	.370	.387	.379
82.0	33.8	37.7	27.4	-31.4	.3568	.376	.400	.439	.420	.410	.361	.420	.410	.410	.380	.13	.263	.439	.400
83.0	37.6	42.7	29.1	85.6	-.9725	.376	.373	.395	.380	.380	.344	.380	.344	.380	.358	.41	.366	.402	.373
84.0	31.6	34.5	26.7	-153.9	1.7481	.376	.362	.413	.388	.375	.311	.388	.375	.388	.337	.42	.362	.401	.362
85.0	36.1	40.6	28.6	125.6	-1.4269	.376	.365	.398	.382	.382	.332	.382	.373	.382	.357	.40	.357	.390	.382
86.0	33.6	37.3	27.5	-59.8	.6789	.376	.366	.396	.386	.376	.335	.386	.366	.386	.346	.41	.376	.376	.376
87.0	36.2	40.8	28.6	63.4	-.7204	.376	.393	.418	.409	.401	.368	.409	.048	.409	.385	.42	.401	.418	.401
88.0	34.7	38.7	27.9	-36.0	.4087	.376	.372	.390	.381	.381	.335	.381	.362	.390	.353	.40	.372	.390	.372
89.0	33.8	37.6	27.6	-22.9	.2601	.376	.367	.387	.377	.377	.337	.377	.367	.397	.357	.40	.377	.397	.367
90.0	35.7	40.1	28.4	47.4	-.5386	.376	.377	.386	.377	.377	.343	.386	.377	.377	.343	.40	.369	.394	.377
91.0	33.0	36.4	27.2	-72.5	.8238	.376	.379	.390	.379	.379	.336	.390	.379	.401	.368	.42	.325	.368	.368
92.0	35.9	40.3	28.5	76.3	-.8664	.376	.384	.393	.384	.384	.342	.384	.376	.393	.325	.39	.368	.401	.359
93.0	32.1	35.2	26.9	-104.0	1.1815	.376	.408	.432	.408	.408	.348	.408	.408	.420	.384	.45	.408	.012	.384
94.0	39.0	44.5	29.9	158.4	-1.8001	.376	.380	.394	.387	.380	.346	.387	.332	.380	.366	.40	.366	.401	.366
95.0	32.6	35.9	27.1	-142.7	1.6213	.376	.391	.402	.391	.379	.322	.391	.379	.391	.357	.42	.391	.414	.254
96.0	38.1	43.3	29.6	129.1	-1.4665	.376	.374	.389	.374	.367	.338	.382	.374	.389	.360	.39	.374	.389	.382
97.0	33.6	37.3	27.6	-99.4	1.1294	.376	.383	.393	.383	.373	.332	.383	.373	.393	.352	.40	.363	.393	.363
98.0	34.8	38.9	28.1	32.1	-.3642	.376	.378	.387	.378	.378	.332	.378	.378	.387	.350	.39	.378	.397	.369
99.0	35.0	39.1	28.2	4.2	-.0481	.376	.377	.395	.386	.377	.331	.386	.377	.386	.358	.40	.386	.386	.340
100.0	34.8	38.9	28.1	-4.2	.0481	.376	.375	.394	.384	.375	.329	.384	.348	.384	.357	.39	.384	.403	.375

Table 5G — Inferred Pressurant Distribution, Scaling Run 114: Test Configuration 3

INFERRED PRESSURANT DISTRIDUTION - 5 C METER CHAMBER OBSTRUCTED GAS MIXI

TIME (SEC)	TEMP(DEG C) MEAN	AIR	PRESSURANT	BETA	BETA/TSTAR	PRESSURANT FRACTION MEAN	I = 1	2	3	4	5	6	7	8	9	10	11	12	13
COMMENCE VALVE OPENING																			
0.0	26.8	26.8	52.5	1.0	0.0000	0.000	0.000	0.000	0.000	0.000	0.000	0.000	0.000	0.000	0.000	0.00	0.000	0.000	
1.0	27.3	27.4	26.7	719.5	12.9530	.018	.799	.799	.656	.799	.799	.942	.227	-2.060	-1.059	-1.05	-.774	-.774	.941
VALVE FULLY OPEN																			
2.0	31.9	32.2	27.7	40.5	2.7724	.083	.206	.381	.905	.359	.402	.074	.053	-.582	-.122	-.23	-.122	-.319	.074
3.0	36.0	36.8	29.5	-4.2	-.1483	.114	-.008	.006	.690	-.062	.170	-.076	.280	-.172	.170	.02	.211	.006	.252
4.0	38.3	40.1	29.3	13.8	.8255	.166	.110	.091	.508	.027	.202	.045	.239	.045	.202	.10	.230	.101	.258
5.0	39.9	42.4	29.6	10.2	.4000	.198	.165	.126	.408	.118	.196	.141	.243	.141	.220	.14	.212	.173	.282
6.0	40.8	44.4	29.9	13.0	.7617	.244	.199	.185	.372	.171	.227	.192	.303	.213	.275	.20	.289	.213	.323
7.0	41.2	45.3	30.2	13.4	.5278	.273	.253	.213	.352	.220	.299	.246	.305	.253	.292	.23	.312	.246	.319
8.0	41.3	45.8	30.3	13.5	.2949	.289	.270	.244	.334	.244	.315	.270	.334	.276	.283	.25	.315	.263	.347
9.0	41.2	46.2	30.4	14.5	.5734	.316	.299	.286	.337	.292	.356	.305	.343	.299	.318	.29	.343	.286	.356
10.0	41.2	46.7	30.7	14.1	.6182	.346	.351	.320	.351	.326	.364	.345	.364	.339	.345	.32	.364	.314	.389
COMMENCE VALVE CLOSURE																			
11.0	41.6	47.6	31.1	11.7	.3959	.367	.384	.372	.384	.366	.390	.390	.384	.293	.360	.35	.317	.360	.426
12.0	40.9	46.9	31.4	33.3	.6054	.388	.379	.354	.379	.360	.392	.399	.405	.399	.379	.36	.405	.379	.450
VALVE FULLY CLOSED																			
13.0	40.6	46.6	31.3	5.4	.0972	.390	.393	.341	.373	.354	.439	.400	.419	.393	.386	.34	.406	.380	.439
14.0	45.9	53.4	34.1	-43.8	-.7947	.390	.380	.360	.360	.365	.386	.380	.412	.406	.401	.37	.412	.391	.449
15.0	47.4	55.4	35.0	-10.9	-.1976	.390	.375	.370	.351	.370	.375	.395	.410	.390	.395	.38	.414	.395	.449
16.0	44.8	52.0	33.5	18.6	.3382	.390	.393	.388	.356	.388	.383	.410	.415	.345	.383	.37	.388	.399	.453
17.0	42.7	49.3	32.4	17.0	.3081	.390	.380	.369	.339	.357	.363	.404	.404	.410	.392	.38	.410	.410	.451
18.0	43.6	50.5	32.9	-7.3	-.1332	.390	.435	.424	.395	.418	.407	.458	.435	.333	.424	.40	.355	.333	.247
19.0	44.8	52.0	33.5	-9.6	-.1752	.390	.382	.376	.344	.365	.349	.403	.403	.409	.387	.38	.398	.414	.457
20.0	43.3	50.0	32.7	12.5	.2276	.390	.382	.382	.342	.359	.342	.405	.411	.405	.382	.39	.394	.411	.463
21.0	43.3	50.0	32.7	0.0	0.0000	.390	.382	.376	.347	.370	.330	.405	.405	.410	.387	.38	.387	.422	.462
22.0	44.1	51.1	33.2	-7.1	-.1290	.390	.375	.387	.353	.359	.325	.414	.398	.403	.392	.38	.387	.425	.464
23.0	42.4	48.9	32.2	14.6	.2649	.390	.368	.380	.356	.356	.326	.398	.404	.416	.398	.36	.404	.440	.464
24.0	41.3	47.5	31.7	9.6	.1737	.390	.355	.387	.349	.349	.317	.393	.399	.424	.399	.39	.399	.443	.462
25.0	46.0	53.6	34.2	-38.4	-.6968	.390	.392	.422	.381	.386	.356	.422	.412	.119	.422	.41	.417	.453	.474
26.0	42.7	49.3	32.4	25.9	.4709	.390	.356	.404	.350	.362	.309	.398	.398	.421	.398	.39	.386	.433	.457
27.0	40.5	46.4	31.2	21.1	.3829	.390	.369	.409	.343	.363	.296	.402	.389	.415	.402	.39	.389	.435	.462
28.0	42.9	49.6	32.5	-22.6	-.4100	.390	.363	.404	.346	.369	.311	.399	.387	.404	.404	.41	.387	.434	.451
29.0	39.1	44.5	30.5	37.2	.6759	.390	.351	.408	.337	.358	.294	.394	.387	.408	.415	.41	.387	.451	.465
30.0	44.5	51.6	33.3	-49.7	-.9025	.390	.359	.408	.348	.359	.310	.386	.392	.403	.408	.41	.386	.446	.452
31.0	42.2	48.7	32.1	18.9	.3426	.390	.356	.410	.350	.356	.313	.380	.392	.404	.410	.41	.386	.440	.458
32.0	40.5	46.4	31.2	16.5	.2999	.390	.357	.410	.344	.350	.311	.383	.397	.403	.410	.41	.390	.443	.456
33.0	43.3	50.0	32.7	-25.5	-.4631	.390	.352	.410	.347	.347	.318	.387	.404	.398	.404	.42	.387	.439	.456
34.0	41.9	48.2	31.9	12.2	.2213	.390	.355	.416	.349	.337	.312	.386	.404	.392	.410	.42	.386	.441	.460
35.0	40.6	46.6	31.3	11.6	.2112	.390	.381	.453	.374	.368	.335	.420	.433	.407	.074	.45	.414	.466	.486
36.0	40.6	46.6	31.3	0.0	0.0000	.390	.344	.422	.350	.350	.311	.396	.396	.389	.403	.44	.376	.435	.455
37.0	43.8	50.7	32.9	-28.0	-.5092	.390	.350	.418	.361	.350	.311	.390	.401	.390	.401	.43	.384	.429	.452
38.0	41.0	47.1	31.5	24.6	.4476	.390	.349	.426	.362	.355	.304	.394	.400	.388	.394	.43	.381	.432	.452
39.0	37.8	42.9	29.9	34.2	.6218	.390	.338	.423	.346	.354	.292	.400	.400	.385	.392	.44	.377	.446	.469
40.0	41.9	48.2	31.9	-42.3	-.7680	.390	.354	.421	.360	.354	.317	.403	.390	.378	.390	.43	.384	.427	.458
41.0	42.9	49.6	32.5	-9.2	-.1678	.390	.387	.452	.393	.387	.346	.428	.428	.422	.417	.45	.264	.200	.487
42.0	38.9	44.3	30.4	39.1	.7110	.390	.344	.424	.359	.344	.294	.395	.409	.395	.373	.43	.381	.446	.474
43.0	41.0	47.1	31.5	-21.9	-.3980	.390	.363	.421	.363	.350	.299	.395	.401	.388	.382	.42	.376	.440	.466
44.0	42.9	49.6	32.5	-17.4	-.3166	.390	.358	.417	.364	.358	.311	.399	.399	.393	.387	.42	.370	.434	.458
45.0	42.2	48.7	32.1	6.1	.1107	.390	.350	.423	.363	.356	.308	.399	.399	.387	.387	.42	.381	.429	.459
46.0	38.0	43.1	30.0	43.3	.7856	.390	.347	.423	.362	.339	.286	.401	.393	.393	.385	.43	.385	.446	.477
47.0	37.1	42.0	29.6	11.1	.2020	.390	.346	.427	.363	.338	.290	.395	.395	.395	.387	.42	.379	.444	.484
48.0	41.0	47.1	31.5	-43.0	-.7816	.390	.356	.421	.369	-.350	.305	.401	.401	.395	.388	.41	.382	.427	.459
49.0	42.4	48.9	32.2	-12.9	-.2343	.390	.358	.424	.382	.364	.310	.400	.406	.400	.388	.41	.388	.430	.412
50.0	41.5	47.7	31.8	7.9	.1439	.390	.358	.420	.376	.351	.308	.402	.402	.389	.383	.40	.376	.433	.464

(Table Continues)

UNCLASSIFIED

Table 5G — Inferred Pressurant Distribution, Scaling Run 114: Test Configuration 3 (Continued)

INFERRED PRESSURANT DISTRIBUTION - 5 C METER CHAMBER OBSTRUCTED GAS MIXI

TIME (SEC)	TEMP(DEG C) MEAN	AIR	PRESSURANT	BETA	BETA/TSTAR	PRESSURANT FRACTION MEAN I = 1	2	3	4	5	6	7	8	9	10	11	12	13
VALVE FULLY CLOSED																		
51.0	37.1	42.0	29.6	47.9	.8696	.390	.355	.420	.371	.347	.298	.404	.404	.387	.387	.41	.379	.436	.469
52.0	38.0	43.1	30.0	-11.1	-.2020	.390	.359	.421	.375	.352	.306	.405	.398	.390	.390	.40	.375	.428	.466
53.0	41.5	47.7	31.8	-37.0	-.6723	.390	.365	.415	.384	.365	.315	.396	.396	.384	.390	.40	.384	.415	.453
54.0	42.6	49.1	32.3	-9.5	-.1717	.390	.365	.413	.383	.359	.323	.401	.401	.389	.383	.40	.383	.413	.455
55.0	41.0	47.0	31.5	14.4	.2620	.390	.371	.409	.384	.364	.326	.403	.396	.390	.384	.40	.377	.409	.454
56.0	36.8	41.5	29.5	47.6	.8649	.390	.357	.407	.373	.365	.307	.398	.398	.398	.382	.41	.382	.423	.465
57.0	36.6	41.3	29.4	2.4	.0440	.390	.366	.417	.383	.383	.307	.391	.391	.391	.374	.40	.374	.425	.459
58.0	40.6	46.6	31.3	-46.6	-.8472	.390	.376	.409	.382	.376	.323	.402	.396	.389	.376	.40	.369	.409	.455
59.0	41.2	47.3	31.6	-5.1	-.0927	.390	.377	.403	.377	.371	.326	.403	.396	.384	.377	.41	.371	.416	.454
60.0	41.5	47.7	31.8	-3.3	-.0600	.390	.375	.400	.381	.368	.331	.406	.393	.393	.375	.41	.368	.418	.450
61.0	41.0	47.0	31.5	5.0	.0905	.390	.377	.402	.383	.364	.325	.402	.396	.389	.377	.42	.370	.415	.448
62.0	39.1	44.5	30.6	20.0	.3625	.390	.374	.403	.381	.367	.324	.403	.388	.388	.367	.42	.374	.417	.460
63.0	37.0	41.7	29.5	25.7	.4661	.390	.366	.407	.382	.366	.317	.399	.382	.399	.366	.42	.374	.423	.464
64.0	36.3	40.8	29.2	9.8	.1774	.390	.478	.530	.504	.486	.435	.521	.495	.512	.460	.49	.141	-.101	.115
65.0	41.3	47.5	31.7	-58.0	-1.0527	.390	.369	.413	.382	.375	.338	.394	.382	.394	.375	.41	.375	.413	.445
66.0	41.9	48.2	31.9	-4.9	-.0884	.390	.421	.458	.427	.427	.390	.440	.230	.360	.335	.20	.421	.464	.489
67.0	38.2	43.4	30.1	38.1	.6920	.390	.436	.474	.436	.444	.399	.459	.452	.467	.263	.46	.021	.240	.512
68.0	40.5	46.4	31.2	-24.9	-.4522	.390	.449	.476	.449	.449	.410	.469	.436	.178	.350	.44	.344	.231	.383
69.0	41.5	47.7	31.8	-10.1	-.1843	.390	.480	.499	.480	.474	.436	.493	.493	.054	.305	.45	.349	.255	.298
70.0	41.0	47.0	31.5	5.0	.0905	.390	.444	.477	.451	.444	.406	.470	.284	.470	.419	.18	.341	.354	.329
71.0	42.0	48.4	32.0	-9.8	-.1778	.390	.367	.404	.380	.367	.337	.398	.386	.404	.374	.41	.374	.422	.447
72.0	42.4	48.9	32.2	-3.1	-.0566	.390	.364	.400	.376	.370	.334	.394	.394	.406	.376	.41	.376	.418	.449
73.0	41.0	47.0	31.5	12.9	.2343	.390	.449	.487	.462	.455	.423	.481	.249	.288	.455	.35	.352	.249	.359
74.0	38.7	44.1	30.4	23.9	.4341	.390	.363	.407	.378	.378	.334	.400	.392	.407	.378	.42	.385	.436	.385
75.0	37.5	42.4	29.8	14.9	.2698	.390	.358	.414	.382	.374	.335	.406	.406	.327	.374	.42	.350	.437	.477
76.0	40.3	46.1	31.1	-31.7	-.5766	.390	.426	.466	.440	.440	.406	.460	.460	213	.386	.44	.226	.266	.440
77.0	43.8	50.7	33.0	-31.5	-.5723	.390	.509	.537	.509	.515	.481	.531	.317	.137	.278	.18	.216	.458	.396
78.0	39.9	45.7	31.0	35.1	.6368	.390	.438	.472	.445	.445	.404	.465	.241	.404	.302	.37	.248	.384	.452
79.0	38.7	44.1	30.4	13.4	.2435	.390	.365	.409	.380	.380	.336	.394	.394	.409	.365	.42	.373	.424	.416
80.0	38.4	43.6	30.2	4.1	.0742	.390	.364	.401	.379	.371	.326	.393	.393	.401	.371	.41	.371	.416	.468
81.0	42.4	48.9	32.2	-40.6	-.7384	.390	.377	.407	.383	.377	.347	.395	.401	.401	.377	.41	.329	.413	.455
82.0	38.9	44.3	30.5	34.7	.6300	.390	.366	.409	.373	.373	.329	.394	.394	.409	.366	.41	.373	.409	.459
83.0	39.4	45.0	30.7	-5.8	-.1058	.390	.373	.415	.373	.380	.331	.401	.394	.387	.359	.41	.373	.408	.457
84.0	37.7	42.7	29.9	20.4	.3711	.390	.395	.442	.395	.410	.348	.426	.090	.426	.387	.43	.395	.434	.488
85.0	38.4	43.6	30.2	-8.6	-.1554	.390	.393	.438	.401	.408	.356	.431	.423	.311	.386	.23	.364	.431	.490
86.0	41.9	48.2	32.0	-36.0	-.6547	.390	.459	.496	.459	.471	.422	.490	.404	.478	.410	.21	.422	.213	.133
87.0	41.9	48.2	32.0	0.0	0.0000	.390	.403	.440	.409	.415	.366	.434	.372	.323	.255	.34	.403	.434	.477
88.0	40.6	46.6	31.3	11.6	.2112	.390	.422	.462	.435	.435	.389	.455	.232	.285	.383	.38	.357	.403	.429
89.0	39.9	45.7	31.0	7.1	.1293	.390	.427	.475	.434	.441	.386	.461	.339	.223	.373	.33	.420	.352	.407
90.0	39.8	45.4	30.9	1.8	.0334	.390	.464	.512	.471	.485	.430	.499	.410	.300	.300	.22	.320	.334	.320
91.0	37.5	42.4	29.8	26.4	.4788	.390	.450	.497	.450	.466	.403	.482	.213	.332	.284	.41	.292	.363	.419
92.0	37.0	41.7	29.5	6.9	.1253	.390	.470	.519	.470	.486	.421	.503	.364	.159	.462	.12	.372	.339	.380
93.0	42.9	49.6	32.5	-62.1	-1.1278	.390	.481	.510	.475	.493	.446	.499	.347	.364	.277	.31	.312	.359	.189
94.0	44.7	51.8	33.4	-14.1	-.2568	.390	.414	.441	.414	.425	.381	.430	.343	.403	.354	.41	.289	.349	.414
95.0	39.6	45.2	30.8	45.4	.8251	.390	.387	.415	.380	.394	.339	.408	.332	.401	.380	.39	.380	.408	.450
96.0	40.1	45.9	31.0	-5.5	-.1002	.390	.390	.417	.377	.397	.343	.404	.397	.404	.377	.42	.384	.323	.431
97.0	37.8	42.9	29.9	25.6	.4652	.390	.488	.519	.480	.495	.434	.503	.118	.334	.257	.51	.172	.295	.465
98.0	41.7	48.0	31.8	-40.7	-.7395	.390	.431	.482	.445	.457	.408	.476	.308	.389	.339	.37	377	.240	.327
99.0	40.5	46.4	31.2	11.8	.2137	.390	.422	.455	.415	.429	.376	.448	.396	.244	.316	.41	.297	.396	.462
100.0	38.9	44.3	30.4	16.8	.3046	.390	.430	.459	.416	.430	.373	.452	.351	.387	.308	.40	.330	.344	.387

Table 5H — Inferred Pressurant Distribution, Scaling Run 115: Test Configuration 3

INFERRED PRESSURANT DISTRIBUTION - 5 C METER CHAMBER OBSTRUCTED GAS MIXI

TIME (SEC)	TEMP(DEG C) MEAN	AIR	PRESSURANT	BETA	BETA/TSTAR	PRESSURANT FRACTION MEAN	I = 1	2	3	4	5	6	7	8	9	10	11	12	13
CONMENCE VALVE OPENING																			
0.0	28.2	28.2	28.3	.8	0.0000	0.000	0.000	0.000	0.000	0.000	0.000	0.000	0.000	0.000	0.000	0.00	0.000	0.000	
1.0	29.3	29.4	27.3	319.2	9.3964	.029	-.240	.006	.449	.056	-.092	-.437	.203	-1.274	-.584	- 48	-.191	-.338	3.304
VALVE FULLY OPEN																			
2.0	34.8	35.4	29.1	11.6	.6980	.086	-.127	-.063	.688	-.127	.113	-.239	.145	-.574	.081	-.04	.081	- 063	1.246
3.0	37.9	39.3	29.6	17.5	1.2506	.149	.046	.046	.560	-.026	.180	-.026	.149	-.098	.128	.04	.046	.036	848
4.0	40.1	42.5	30.5	14.2	.9564	.204	.121	.162	.513	.129	.229	.071	.204	.045	.171	.11	.204	.112	.580
5.0	41.8	44.7	31.3	-11.2	-.1344	.214	.211	.181	.442	.181	.263	.181	.270	-.020	.241	.19	.174	.077	.382
6.0	42.4	46.2	31.4	13.2	.6557	.252	.237	.196	.393	.196	.257	.237	.298	.230	.264	-.03	.284	.162	.535
7.0	42.0	46.1	31.3	17.3	.6215	.278	.246	.199	.327	.192	.253	.226	.280	.186	.253	.15	.280	.260	.758
8.0	42.9	47.9	31.9	11.2	.5263	.312	.313	.276	.363	.282	.319	.301	182	.276	.282	.26	.157	.307	.732
9.0	42.2	47.4	31.8	17.6	.6221	.336	.310	.253	.323	.259	.285	.291	.342	298	.291	.27	.342	.310	.777
10.0	42.2	47.6	31.9	14.4	.2712	348	.342	.278	329	.291	.335	.335	.342	.240	.278	.29	.354	.323	.779
CONMENCE VALVE CLOSURE																			
11.0	42.2	48.1	32.1	13.9	.4854	.370	.328	.322	.353	.341	.378	.372	.372	.297	.360	.34	.335	.266	.741
12.0	42.7	49.0	33.0	17.9	.5354	.396	.409	.390	.415	.396	.434	.415	.390	.195	.264	.31	.434	.421	.672
VALVE FULLY CLOSED																			
13.0	42.3	48.5	33.4	14.0	.4189	.410	.435	.395	.415	.408	.441	.448	.408	.137	.415	.35	.276	.355	.838
14.0	43.2	49.7	33.9	-4.9	-.1471	.410	.406	.355	.361	.368	.393	.412	.387	.412	.387	.36	.431	.425	.621
15.0	39.9	45.3	32.1	20.4	.6090	.410	.390	.344	.329	.360	.344	.390	.155	.435	.420	.36	.413	.420	.958
16.0	38.9	44.0	31.6	7.7	.2290	.410	.414	.382	.366	.398	.374	.438	.455	.438	.252	.23	.236	.390	.949
17.0	37.2	41.6	30.8	14.6	.4349	.410	.348	.311	.266	.311	.293	.357	.394	.422	.394	.34	.403	.422	1.056
18.0	37.7	42.3	31.0	-4.7	-.1389	.410	.400	.383	.347	.374	.356	.427	.444	.453	.153	.29	.338	.268	1.089
19.0	39.6	44.9	32.0	-15.1	-.4509	.410	.358	.350	.311	.342	.311	.381	.412	.404	.373	.28	.412	.428	.954
20.0	34.9	38.5	29.8	42.6	1.2738	.410	.398	.398	.330	.364	.330	.444	.376	.444	.444	.44	.467	.478	.410
21.0	39.1	44.2	31.7	-39.0	-1.1652	.410	.433	.433	.392	.417	.384	.481	.119	.392	.441	.45	.014	.505	.859
22.0	36.5	40.7	30.5	22.4	.6698	.410	.378	.388	.339	.368	.310	.437	.417	.417	.427	-.24	.437	.505	1.152
23.0	39.1	44.2	31.7	-22.4	-.6698	.410	.377	.369	.337	.345	.304	.417	.393	.417	.409	.11	.377	.482	.989
24.0	39.9	45.3	32.2	-6.3	-.1894	.410	.378	.378	.355	.355	.317	.439	.447	.439	.210	.30	.431	.492	.775
25.0	34.3	37.5	29.5	53.1	1.5868	.410	.361	.373	.348	.310	.248	.473	-.266	.373	448	.41	.298	.561	1.388
26.0	39.1	44.1	31.8	-47.3	-1.4144	.410	.385	.385	.377	.353	.304	.451	.410	.451	.255	.22	.157	.524	1.055
27.0	36.2	40.1	30.4	25.9	.7728	.410	.303	.313	.303	.262	.200	.385	.415	.385	.374	.37	.385	.477	1.153
28.0	38.2	42.9	31.4	-19.1	-.5715	.410	.329	.364	.346	.312	.260	.416	.372	.398	.407	.39	.181	.485	1.058
29.0	39.6	44.8	32.1	-10.7	-.3200	.410	.335	.367	.343	.311	.264	.406	.398	.351	.272	.42	.382	.469	1.007
30.0	38.6	43.4	31.6	7.9	.2363	.410	.349	.400	.358	.341	.281	.434	.392	.375	.366	.45	239	.307	1.035
31.0	33.6	36.5	29.3	52.8	1.5764	.410	.446	.529	.474	.432	.335	.585	.571	-.289	-.455	.54	.363	.224	1.569
32.0	42.2	48.2	33.5	-74.1	-2.2127	.410	.382	.422	.388	.368	.327	.443	.422	.402	.382	.19	.409	.476	.714
33.0	36.7	40.8	30.6	40.9	1.2215	.410	.333	.392	.343	.333	.254	.421	.235	.352	.225	.48	.362	.470	1.127
34.0	38.6	43.4	31.6	-16.7	-.5001	.410	.327	.369	.327	.310	.259	.395	.386	.352	.352	.45	.344	.454	.997
35.0	35.8	39.7	30.2	25.5	.7620	.410	.325	.410	.346	.293	.261	.420	.378	.123	.346	.48	.346	.452	1.141
36.0	36.3	40.4	30.5	-5.5	-.1631	.410	.406	.467	.416	.386	.335	.487	.396	.426	.133	.42	.163	.305	.982
37.0	35.5	39.2	30.1	9.3	.2779	.410	.307	.384	.318	.285	.230	.406	.362	.318	.318	.47	.329	.460	1.140
38.0	37.2	41.5	30.9	-17.6	-.5264	.410	.334	.390	.343	.315	.259	.409	.343	.334	.324	.45	.324	.456	1.039
39.0	33.1	35.8	29.1	49.6	1.4818	.410	.293	.382	.323	.263	.159	.397	.308	.293	.278	.50	.278	.442	1.408
40.0	36.8	41.0	30.8	-46.6	-1.3927	.410	.329	.387	.348	.299	.241	.407	.358	.319	.319	.46	.319	.446	1.091
41.0	33.1	35.8	29.1	46.6	1.3927	.410	.292	.397	.307	.247	.143	.397	.277	.292	.277	.51	.262	.472	1.444
42.0	37.2	41.5	31.0	-49.6	-1.4818	.410	.393	.460	.402	.364	.307	.469	.412	.393	.374	.23	.374	.488	.660
43.0	35.5	39.1	30.2	17.6	.5264	.410	.413	.469	.413	.391	.302	.480	.202	.358	.235	.00	.302	.513	1.248
44.0	42.2	48.1	33.6	-52.7	-1.5728	.410	.472	.513	.479	.458	.403	.513	-.016	.438	.369	.33	-.002	.458	.905
45.0	36.0	39.8	30.4	47.5	1.4175	.410	.420	.483	.430	.420	.335	.494	.281	.239	.164	.42	.058	.462	1.121
46.0	36.7	40.8	30.8	-7.0	-.2106	.410	.418	.478	.418	.408	.318	.478	.388	.298	.128	.54	.398	-.082	1.128
47.0	34.1	37.2	29.6	29.9	.8930	.410	.340	.418	.340	.340	.210	.418	.353	.275	.275	.41	.262	.366	1.316
48.0	36.5	40.5	30.7	-28.2	-.8435	.410	.378	.439	.368	.368	.267	.429	.216	.368	.358	.49	.114	.389	1.141
49.0	34.3	37.5	29.6	25.9	.7740	.410	.365	.428	.352	.339	.224	.441	.365	.199	.326	.45	.212	.454	1.168
50.0	37.4	41.7	31.1	-33.9	-1.0114	.410	.405	.461	.414	.395	.310	.461	-.125	.442	.395	.33	.338	.461	1.029

(Table Continues)

UNCLASSIFIED

Table 5H — Inferred Pressurant Distribution, Scaling Run 115: Test Configuration 3 (Continued)

INFERRED PRESSURANT DISTRIBUTION - 5 C METER CHAMBER OBSTRUCTED GAS MIXI

TIME (SEC)	TEMP(DEG C) MEAN	AIR	PRESSURANT	BETA	BETA/TSTAR	PRESSURANT FRACTION MEAN I = 1	2	3	4	5	6	7	8	9	10	11	12	13
VALVE FULLY CLOSED																		
51.0	35.1	38.7	30.0	23.2	.6916	.410	.322	.392	.322	.311	.207	.392	.346	.357	.218	.46	.311	.485	1.202
52.0	33.6	36.5	29.3	20.9	.6252	.410	.479	.549	.479	.451	.340	.563	-.576	.507	.229	.41	.354	.063	1.479
53.0	36.0	39.8	30.4	-30.4	-.9093	.410	.348	.411	.358	.337	.252	.422	.379	.369	.358	.25	.358	.348	1.134
54.0	34.9	38.4	29.9	11.8	.3530	.410	.338	.409	.338	.338	.220	.409	.279	.362	.326	.46	.315	.374	1.151
55.0	34.8	38.2	29.9	2.1	.0641	.410	.330	.390	.318	.318	.186	.390	.330	.366	.318	.36	.306	.462	1.242
56.0	35.8	39.6	30.3	-12.1	-.3615	.410	.317	.381	.317	.317	.209	.371	.327	.381	.317	.46	.317	.446	1.159
57.0	33.4	36.3	29.3	31.3	.9336	.410	.304	.403	.318	.304	.190	.375	.247	.389	.304	.48	.304	.474	1.229
58.0	36.7	40.8	30.8	-39.8	-1.1878	.410	.323	.383	.323	.333	.243	.373	.333	.383	.323	.44	.323	.443	1.102
59.0	37.9	42.4	31.4	-11.1	-.3302	.410	.376	.421	.376	.376	.303	.412	.339	.421	.366	.47	.357	.475	.630
60.0	35.3	38.9	30.1	25.6	.7654	.410	.325	.393	.336	.336	.234	.382	.279	.370	.302	.42	.314	.439	1.189
61.0	31.9	34.0	28.7	53.2	1.5878	.410	.361	.454	.361	.361	.212	.454	-.218	.398	.137	.43	.324	.529	1.519
62.0	37.2	41.5	31.0	-70.1	-2.0951	.410	.611	.650	.611	.611	.535	.650	.152	.229	.075	.21	.075	.190	.717
63.0	43.9	50.3	34.6	-45.3	-1.3543	.410	.588	.619	.588	.594	.530	.607	-.080	.556	-.105	.63	.092	-.035	.740
64.0	40.1	45.4	32.5	22.9	.6833	.410	.488	.535	.488	.496	.426	.519	.138	.232	.434	.34	.263	.372	.589
65.0	34.6	37.9	29.8	50.1	1.4956	.410	.415	.477	.403	.415	.304	.465	.378	.440	.366	.13	.094	.391	1.045
66.0	35.8	39.6	30.4	-14.3	-.4269	.410	.495	.550	.484	.506	.408	.539	.332	.419	-.323	.49	.419	.495	.506
67.0	36.0	39.8	30.5	-1.9	-.0556	.410	.521	.575	.511	.521	.425	.554	.081	.446	.221	.34	.059	.489	.575
68.0	35.6	39.3	30.3	3.8	.1124	.410	.327	.382	.327	.338	.238	.371	.327	.360	.305	.44	.305	.416	1.181
69.0	34.3	37.4	29.7	17.0	.5064	.410	.463	.527	.463	.476	.373	.515	.412	.489	-.231	.37	-.424	.553	1.337
70.0	35.8	39.6	30.4	-18.8	-.5626	.410	.415	.480	.415	.437	.338	.458	-.426	.448	.382	.52	.098	.502	1.255
71.0	37.7	42.1	31.4	-18.4	-.5501	.410	.473	.519	.473	.482	.408	.510	.482	.045	.435	.24	-.039	.110	1.189
72.0	34.1	37.2	29.6	39.1	1.1669	.410	.420	.473	.407	.433	.327	.460	.367	.235	.288	.11	.169	.380	1.252
73.0	33.7	36.7	29.5	5.0	.1493	.410	.451	.520	.451	.479	.368	.506	-.307	-.266	.396	.46	.424	.424	1.416
74.0	33.7	36.7	29.5	0.0	0.0000	.410	.349	.418	.349	.391	.280	.418	.336	.377	.115	.43	.349	.418	1.094
75.0	36.0	39.8	30.5	-27.9	-.8335	.410	.490	.544	.490	.523	.447	.544	.145	.210	.156	.17	.242	.123	1.235
76.0	35.3	38.8	30.2	7.7	.2299	.410	.512	.570	.523	.535	.454	.558	-.227	.327	.454	.27	.073	.581	.696
77.0	35.5	39.1	30.3	-2.0	-.0595	.410	.484	.529	.484	.495	.427	.518	-.140	.223	.427	.00	.405	.541	.926
78.0	32.4	34.8	28.9	45.0	1.3436	.410	.324	.410	.324	.341	.256	.393	.341	.359	-.341	.51	.324	.461	1.622
79.0	33.1	35.7	29.2	-12.6	-.3775	.410	.475	.551	.475	.490	.413	.536	.383	.122	.429	-.59	-.015	.582	1.485
80.0	38.6	43.2	31.8	-60.2	-1.7981	.410	.413	.439	.396	.413	.361	.431	.334	.387	.159	.46	.124	.439	.965
81.0	35.6	39.3	30.3	27.4	.8174	.410	.535	.579	.524	.535	.468	.568	.390	.134	.501	.45	.134	-.111	.613
82.0	33.9	37.0	29.5	21.7	.6495	.410	.452	.506	.439	.452	.358	.479	.452	.022	.345	.02	.102	.466	1.233
83.0	34.4	37.7	29.8	-7.2	-.2144	.410	.381	.431	.368	.393	.305	.431	.393	.381	.191	.46	.292	-.024	1.317
84.0	34.8	38.1	29.9	-4.5	-.1334	.410	.393	.429	.369	.393	.320	.429	.381	.295	.356	.49	-.033	.210	1.294
85.0	32.0	34.3	28.8	43.9	1.3119	.410	.302	.357	.284	.321	.194	.357	.321	.284	.103	.44	.284	.411	1.662
86.0	32.0	34.3	28.8	0.0	0.0000	.410	.291	.346	.273	.291	.164	.346	.309	.309	.255	.43	.255	.400	1.651
87.0	32.0	34.3	28.8	0.0	0.0000	.410	.326	.380	.326	.326	.217	.399	.326	-.163	.290	.47	.308	.435	1.686
88.0	35.8	39.5	30.4	-55.0	-1.6423	.410	.328	.361	.328	.339	.273	.372	.350	.350	.317	.42	.317	.394	1.172
89.0	36.0	39.8	30.5	-1.9	-.0556	.410	.348	.359	.338	.338	.273	.381	.348	.348	.316	.42	.316	.391	1.146
90.0	36.0	39.8	30.5	0.0	0.0000	.410	.344	.366	.333	.344	.269	.377	.344	.344	.323	.42	.323	.387	1.153
91.0	33.1	35.8	29.2	38.5	1.1489	.410	.315	.345	.300	.315	.208	.361	.315	.315	.285	.43	.300	.376	1.456
92.0	32.2	34.5	28.8	16.1	.4810	.410	.298	.333	.298	.298	.176	.351	.298	.298	.263	.42	.298	.386	1.610
93.0	35.3	38.8	30.2	-46.4	-1.3850	.410	.374	.409	.374	.386	.305	.409	.397	.363	-.202	.46	.363	.432	1.250
94.0	35.6	39.3	30.3	-3.9	-.1177	.410	.343	.365	.332	.343	.265	.365	.343	.343	.332	.42	.321	.376	1.178
95.0	35.8	39.5	30.4	-1.9	-.0568	.410	.343	.376	.332	.343	.266	.365	.354	.343	.321	.42	.299	.398	1.165
96.0	33.9	37.0	29.5	23.6	.7053	.410	.401	.428	.375	.401	.307	.428	.321	-.003	.159	.48	.375	.280	1.371
97.0	31.9	34.1	28.7	36.5	1.0912	.410	.301	.338	.263	.301	.170	.338	.301	.301	.263	.41	.282	.375	1.680
98.0	33.7	36.7	29.5	-34.1	-1.0188	.410	.340	.353	.312	.326	.229	.353	.326	.312	.298	.40	.326	.381	1.361
99.0	36.0	39.8	30.5	-27.9	-.8335	.410	.421	.442	.399	.410	.334	.442	.421	-.034	.388	.47	-.077	.475	1.232
100.0	33.2	36.0	29.3	35.7	1.0669	.410	.366	.396	.337	.351	.247	.396	.366	.351	.039	.45	.143	.426	1.451

Table 5I — Inferred Pressurant Distribution, Scaling Run 116: Test Configuration 3

INFERRED PRESSURANT DISTRIBUTION - 5 C METER CHAMBER OBSTRUCTED GAS MIXI

TIME (SEC)	TEMP(DEG C) MEAN	AIR	PRESSURANT	BETA	BETA/TSTAR	PRESSURANT FRACTION MEAN I = 1	2	3	4	5	6	7	8	9	10	11	12	13
COMMENCE VALVE OPENING																		
0.0	28.1	28.1	33.3	.6	0.0000	0.000	0.000	0.000	0.000	0.000	0.000	0.000	0.000	0.000	0.00	0.000	0.000	
1.0	29.7	29.8	25.7	94.7	1.8119	.019	.193	.316	.438	.316	.095	.045	-.102	-.397	-.593	-.12	.070	-.126	.119
VALVE FULLY OPEN																		
2.0	34.2	34.6	29.7	28.6	1.0295	.080	.028	.130	.953	.151	.295	-.116	.130	-.568	-.013	.33	-.075	-.198	-.013
3.0	37.2	38.1	30.1	6.8	.2486	.113	.067	.030	.695	.005	.193	-.033	.155	-.221	.118	.31	.118	-.033	.055
4.0	40.1	42.0	30.1	10.3	.5908	.162	.109	.109	.488	.067	.193	.075	.227	-.026	.227	.36	.210	-.093	.160
5.0	42.0	45.0	30.5	11.1	.6508	.210	.185	.206	.413	.206	.226	.171	.295	.019	.178	.27	.185	.192	.178
6.0	42.0	45.7	30.6	15.3	.6885	.245	.217	.197	.363	.177	.224	.177	.283	.151	.263	.40	.263	.217	.237
7.0	42.2	46.5	30.9	14.1	.5792	.275	.262	.218	.326	.224	.288	.256	.288	.275	.281	.39	.288	.230	.249
8.0	42.6	47.4	31.2	11.8	.3300	.295	.302	.259	.338	.259	.320	.295	.320	.277	.314	.43	.363	.050	.302
9.0	42.5	47.8	31.3	14.4	.5199	.320	.321	.266	.339	.266	.339	.321	.339	.297	.285	.43	.339	.303	.309
10.0	42.3	47.9	31.4	15.4	.5267	.343	.345	.291	.345	.303	.351	.351	.357	.309	.339	.47	.357	.309	.327
COMMENCE VALVE CLOSURE																		
11.0	42.1	48.1	31.6	14.8	.4775	.364	.375	.326	.369	.333	.375	.357	.308	.345	.363	.49	.393	.339	.351
12.0	42.0	48.1	32.1	24.3	.4688	.382	.390	.340	.371	.334	.384	.384	.403	.328	.390	.52	.403	.353	.365
VALVE FULLY CLOSED																		
13.0	41.6	47.6	32.4	18.7	.3619	.393	.407	.341	.374	.361	.407	.401	.388	.355	.394	.54	.414	.355	.368
14.0	43.0	49.4	33.1	-12.7	-.2450	.393	.391	.361	.367	.373	.404	.379	.379	.385	.391	.50	.397	.391	.391
15.0	43.0	49.4	33.1	0.0	0.0000	.393	.389	.359	.359	.371	.371	.396	.396	.389	.377	.54	.402	.383	.377
16.0	42.3	48.5	32.8	6.2	.1196	.393	.386	.367	.348	.373	.360	.392	.399	.399	.367	54	.405	.392	.380
17.0	41.8	47.8	32.5	4.8	.0936	.393	.378	.365	.352	.372	.359	.404	.378	.385	.385	.56	.404	.391	.378
18.0	42.3	48.5	32.8	-4.8	-.0936	.393	.392	.380	.354	.380	.348	.405	.392	.373	.360	.57	.399	.399	.360
19.0	41.1	46.9	32.2	11.6	.2240	.393	.392	.379	.358	.379	.345	.419	.379	.385	.365	.58	.406	.399	.324
20.0	40.8	46.5	32.0	3.5	.0679	.393	.388	.367	.360	.367	.326	.416	.388	.381	.353	.57	.402	.409	.381
21.0	40.8	46.5	32.0	0.0	0.0000	.393	.390	.383	.376	.369	.342	.425	.411	.397	.183	.59	.411	.438	.397
22.0	41.5	47.4	32.3	-6.9	-.1340	.393	.369	.376	.369	.349	.336	.402	.389	.369	.376	.56	.396	.422	.389
23.0	40.6	46.2	31.9	8.7	.1686	.393	.373	.380	.359	.345	.324	.401	.380	.380	.373	.59	.387	.429	.387
24.0	40.2	45.8	31.7	3.7	.0708	.393	.365	.379	.365	.350	.322	.400	.379	.386	.365	.58	.379	.443	.393
25.0	40.4	46.0	31.8	-1.8	-.0357	.393	.366	.380	.359	.352	.324	.394	.380	.387	.359	.59	.380	.444	.394
26.0	40.2	45.8	31.7	1.8	.0357	.393	.358	.387	.358	.344	.322	.401	.379	.394	.358	.58	.372	.451	.401
27.0	40.1	45.5	31.7	1.9	.0362	.393	.353	.374	.367	.338	.317	.410	.382	.389	.353	.59	.360	.475	.403
28.0	39.9	45.3	31.6	1.9	.0367	.393	.349	.378	.364	.334	.313	.414	.385	.393	.356	.59	.364	.465	.400
29.0	40.2	45.8	31.7	-3.8	-.0729	.393	.350	.379	.365	.329	.308	.415	.386	.386	.358	.60	.358	.465	.407
30.0	39.2	44.4	31.2	11.7	.2252	.393	.348	.378	.370	.332	.294	.424	.401	.378	.355	.61	.363	.454	.401
31.0	39.5	44.8	31.4	-4.0	-.0774	.393	.357	.387	.379	.342	.298	.432	.394	.372	.350	.60	.357	.446	.394
32.0	39.9	45.3	31.6	-3.9	-.0751	.393	.373	.388	.380	.351	.300	.439	.395	.380	.366	.61	.366	.446	.315
33.0	39.2	44.4	31.2	7.9	.1524	.393	.395	.410	.418	.365	.319	.471	.395	.159	.403	.57	.395	.463	.349
34.0	43.0	49.4	33.1	-38.1	-.7371	.393	.446	.453	.453	.416	.379	.502	.434	.342	.459	.42	.232	.281	.293
35.0	38.7	43.7	31.0	44.2	.8548	.393	.373	.373	.388	.333	.278	.444	.388	.357	.349	.63	.357	.444	.396
36.0	39.4	44.6	31.3	-8.3	-.1597	.393	.361	.399	.399	.339	.286	.429	.384	.354	.354	.62	.346	.444	.391
37.0	38.3	43.2	30.8	12.6	.2435	.393	.359	.399	.399	.343	.278	.432	.383	.343	.351	.65	.351	.440	.383
38.0	39.9	45.3	31.6	-18.4	-.3565	.393	.417	.454	.446	.403	.337	.483	.301	.403	.403	.62	.366	.169	.301
39.0	38.2	43.0	30.7	20.7	.3993	.393	.363	.412	.396	.347	.273	.428	.379	.347	.347	.64	.355	.437	.388
40.0	38.7	43.7	31.0	-6.6	-.1269	.393	.378	.410	.394	.362	.275	.425	.378	.346	.346	.62	.346	.441	.386
41.0	38.9	43.9	31.1	-2.1	-.0409	.393	.387	.426	.426	.372	.294	.442	.286	.364	.364	.65	.364	.340	.395
42.0	38.7	43.7	31.0	2.1	.0409	.393	.365	.413	.397	.349	.278	.413	.373	.342	.357	.65	.357	.426	.389
43.0	38.9	43.9	31.1	-2.1	-.0409	.393	.367	.414	.391	.360	.282	.414	.375	.344	.352	.64	.352	.430	.383
44.0	38.0	42.7	30.7	10.9	.2115	.393	.410	.460	.435	.401	.319	.460	.418	.401	.393	.71	.194	.078	.426
45.0	40.2	45.8	31.7	-26.6	-.5150	.393	.413	.449	.427	.399	.320	.456	.349	.399	.392	.52	.292	.434	.256
46.0	37.8	42.5	30.6	28.9	.5590	.393	.453	.487	.470	.437	.344	.504	.437	-.026	.176	.44	.411	.512	.462
47.0	42.0	48.1	32.6	-45.9	-.8874	.393	.417	.449	.430	.411	.346	.449	.145	.391	.398	.64	.385	.307	.339
48.0	38.3	43.2	30.8	39.3	.7596	.393	.368	.408	.392	.368	.287	.408	.368	.352	.352	.65	.335	.432	.384
49.0	38.7	43.7	31.0	-4.3	-.0839	.393	.374	.413	.390	.366	.295	.413	.366	.358	.350	.65	.334	.429	.374
50.0	38.3	43.2	30.8	4.3	.0839	.393	.373	.421	.389	.373	.292	.413	.356	.348	.348	.64	.332	.437	.381

(Table Continues)

UNCLASSIFIED

Table 5I — Inferred Pressurant Distribution, Scaling Run 116: Test Configuration 3 (Continued)

INFERRED PRESSURANT DISTRIBUTION - 5 C METER CHAMBER OBSTRUCTED GAS MIXI

TIME (SEC)	TEMP(DEG C) MEAN	AIR	PRESSURANT		BETA	BETA/TSTAR	PRESSURANT FRACTION MEAN I = 1	2	3	4	5	6	7	8	9	10	11	12	13
VALVE FULLY CLOSED																			
51.0	38.0	42.7	30.7	4.5	.0868		.393	.372	.414	.389	.364	.289	.405	.364	.356	.347	.65	.331	.439	.389
52.0	38.2	43.0	30.7	-2.3	-.0438		.393	.373	.414	.389	.365	.291	.398	.365	.348	.348	.65	.332	.447	.389
53.0	38.3	43.2	30.8	-2.2	-.0430		.393	.441	.473	.449	.441	.376	.473	.433	.417	.368	.61	.028	.344	.255
54.0	38.0	42.7	30.7	4.5	.0868		.393	.365	.407	.382	.373	.307	.398	.365	.340	.349	.64	.340	.440	.399
55.0	40.8	46.4	32.0	-32.0	-.6191		.393	.417	.451	.437	.424	.368	.451	.271	.403	.403	.66	.230	.327	.264
56.0	37.8	42.5	30.6	34.3	.6629		.393	.358	.408	.383	.374	.316	.391	.349	.341	.349	.66	.349	.433	.400
57.0	37.5	42.0	30.4	4.7	.0916		.393	.358	.418	.375	.367	.315	.393	.393	.349	.341	.66	.315	.427	.401
58.0	38.5	43.4	30.9	-13.7	-.2650		.393	.361	.425	.393	.377	.329	.401	.361	.385	.257	.64	.337	.441	.401
59.0	37.3	41.8	30.4	16.1	.3119		.393	.360	.413	.378	.378	.316	.395	.351	.360	.351	.65	.334	.430	.386
60.0	37.8	42.5	30.6	-7.2	-.1386		.393	.408	.459	.416	.416	.366	.442	.131	.408	.391	.69	.274	.484	.223
61.0	38.0	42.7	30.7	-2.3	-.0446		.393	.355	.405	.380	.371	.322	.388	.363	.363	.355	.65	.338	.430	.388
62.0	37.3	41.8	30.4	9.5	.1831		.393	.357	.409	.374	.374	.322	.392	.357	.366	.348	.66	.339	.427	.383
63.0	37.5	42.0	30.4	-2.4	-.0471		.393	.362	.414	.371	.379	.327	.388	.362	.362	.345	.64	.336	.414	.405
64.0	38.3	43.2	30.8	-11.5	-.2228		.393	.367	.408	.375	.375	.335	.383	.367	.367	.359	.64	.335	.424	.375
65.0	37.3	41.8	30.4	14.0	.2697		.393	.360	.404	.378	.378	.325	.395	.369	.369	.351	.64	.334	.421	.378
66.0	37.3	41.8	30.4	0.0	0.0000		.393	.368	.403	.376	.376	.333	.385	.385	.368	.350	.65	.333	.420	.359
67.0	39.2	44.4	31.2	-24.5	-.4732		.393	.412	.442	.412	.412	.374	.427	.259	.191	.397	.64	.381	.458	.298
68.0	38.2	43.0	30.8	12.8	.2475		.393	.373	.406	.373	.381	.332	.398	.365	.373	.357	.62	.340	.414	.373
69.0	37.1	41.5	30.3	14.2	.2747		.393	.373	.400	.382	.382	.320	.391	.356	.365	.356	.64	.338	.416	.382
70.0	38.0	42.7	30.7	-12.0	-.2310		.393	.370	.403	.378	.378	.336	.386	.361	.370	.353	.63	.345	.411	.386
71.0	37.8	42.5	30.6	2.3	.0446		.393	.373	.406	.373	.373	.330	.381	.364	.364	.356	.63	.347	.423	.389
72.0	37.1	41.5	30.3	9.7	.1865		.393	.376	.403	.367	.376	.323	.394	.367	.367	.350	.64	.341	.420	.385
73.0	36.8	41.1	30.1	5.1	.0988		.393	.379	.407	.370	.379	.315	.388	.361	.361	.352	.65	.343	.416	.388
74.0	37.6	42.2	30.5	-12.4	-.2399		.393	.376	.402	.376	.376	.325	.385	.376	.368	.351	.64	.342	.410	.385
75.0	37.8	42.5	30.6	-2.3	-.0453		.393	.374	.400	.374	.374	.332	.383	.374	.366	.358	.63	.349	.406	.383
76.0	37.6	42.2	30.5	2.3	.0453		.393	.370	.395	.370	.378	.344	.378	.378	.361	.353	64	.353	.404	.387
77.0	37.1	41.5	30.3	7.3	.1412		.393	.367	.402	.367	.375	.340	.375	.375	.358	.358	.65	.349	.411	.384
78.0	36.6	40.8	30.0	7.7	.1497		.393	.362	.408	.371	.380	.334	.380	.371	.353	.353	.65	.353	.408	.380
79.0	37.3	41.8	30.4	-10.2	-.1976		.393	.360	.404	.378	.378	.343	.378	.378	.351	.351	.64	.351	.413	.378
80.0	37.6	42.2	30.5	-4.8	-.0933		.393	.406	.449	.415	.432	.389	.432	.415	.210	.142	.59	.364	.440	.423
81.0	36.9	41.3	30.2	9.8	.1901		.393	.372	.408	.381	.390	.345	.390	.372	.381	.354	.67	.327	.300	.408
82.0	36.6	40.8	30.0	5.2	.1008		.393	.380	.417	.389	.389	.361	.389	.370	.176	.370	.68	.370	.417	.398
83.0	36.6	40.8	30.0	0.0	0.0000		.393	.367	.404	.376	.385	.348	.385	.367	.339	.358	.67	.321	.404	.385
84.0	37.3	41.8	30.4	-10.2	-.1976		.393	.370	.405	.378	.387	.352	.387	.378	.370	.370	.65	.247	.413	.396
85.0	38.5	43.4	30.9	-16.1	-.3119		.393	.369	.393	.369	.385	.353	.377	.377	.345	.361	.62	.361	.409	.385
86.0	37.3	41.8	30.4	16.1	.3119		.393	.374	.400	.365	.382	.347	.374	.374	.365	.330	.65	.365	.400	.382
87.0	36.6	40.8	30.0	10.2	.1976		.393	.373	.401	.373	.383	.345	.383	.373	.336	.355	.67	.327	.401	.392
88.0	36.6	40.8	30.0	0.0	0.0000		.393	.367	.395	.367	.376	.339	.376	.367	.358	.348	.68	.358	.404	.376
89.0	36.8	41.1	30.1	-2.6	-.0509		.393	.426	.453	.426	.435	.407	.435	.453	.416	.124	.65	.426	.225	.234
90.0	37.8	42.5	30.6	-14.8	-.2851		.393	.369	.394	.377	.377	.352	.385	.369	.360	.327	.65	.360	.402	.385
91.0	37.5	42.0	30.4	4.7	.0916		.393	.359	.394	.368	.377	.342	.377	.377	.351	.368	.65	.359	.394	.394
92.0	37.5	42.0	30.4	0.0	0.0000		.393	.359	.402	.367	.367	.350	.376	.376	.359	.367	.65	.359	.393	.385
93.0	36.6	40.8	30.0	12.7	.2446		.393	.385	.422	.385	.394	.366	.394	.403	.366	.255	.69	.236	.403	.412
94.0	38.0	42.7	30.7	-19.7	-.3801		.393	.410	.444	.410	.419	.402	.419	.460	.120	.070	.65	.402	.427	.469
95.0	39.0	44.1	31.2	-13.0	-.2516		.393	.433	.464	.441	.441	.425	.448	.348	.263	.356	.71	.217	.209	.348
96.0	36.6	40.8	30.0	32.6	.6293		.393	.364	.401	.373	.373	.355	.383	.383	.345	.327	.67	.364	.392	.383
97.0	36.1	40.1	29.8	8.2	.1592		.393	.395	.434	.415	.415	.386	.425	.405	.075	.269	.73	.405	.337	.415
98.0	37.1	41.5	30.3	-16.0	-.3086		.393	.417	.444	.426	.426	.399	.435	.426	.044	.390	.71	.417	.133	.435
99.0	40.2	45.8	31.7	-38.4	-.7424		.393	.373	.388	.373	.373	.359	.381	.373	.366	.373	.60	.366	.395	.388
100.0	37.1	41.5	30.3	38.4	.7424		.393	.367	.393	.375	.367	.349	.375	.375	.358	.367	.65	.358	.393	.384

XXX

Table 6 — Mean Values of All Quantities, Test Configuration 3

TIME SEC	TMP,C INIT	TMP,C	TMP,C	BETA	BETA/ THETA	X BAR	MEAN PRESSURANT FRACTIONS AT LOCATIONS I 1	2	3	4	5	6	7	8	9	10	11	12	13	TAU
0.0	25.6	25.6	18.2	.6	0.0000	0.000	0.000	0.000	0.000	0.000	0.000	0.000	0.000	0.000	0.000	0.000	0.00	0.000	0.000	0.00
.9	27.5	27.6	24.2	161.8	2.1166	.020	.142	.200	.600	.271	.167	-.154	.289	-.822	-.346	-.305	-.13	-.135	.482	.05
1.3	29.2	29.4	25.5	102.9	2.5421	.039	.127	.124	.588	.187	.219	-.201	.303	-.732	-.224	-.314	-.07	-.109	.520	.10
1.7	31.0	31.4	26.3	56.0	1.8202	.059	.115	.035	.482	.080	.254	-.176	.261	-.504	-.054	-.082	.01	-.053	.401	.15
2.1	32.7	33.3	26.7	22.9	1.0899	.079	.094	-.016	.407	.008	.258	-.134	.218	-.294	.086	.031	.08	.000	.284	.20
2.5	34.0	34.9	26.7	12.0	.7848	.099	.093	-.008	.390	-.003	.239	-.088	.210	-.176	.132	.069	.12	.040	.257	.25
2.8	35.2	36.5	26.7	9.6	.6440	.118	.095	.003	.368	-.009	.217	-.041	.213	-.073	.167	.100	.16	.078	.257	.30
3.2	36.2	37.8	26.6	11.7	.7818	.138	.115	.039	.370	.019	.216	.009	.210	-.005	.184	.120	.17	.092	.250	.35
3.6	37.0	39.0	26.7	12.7	.8090	.158	.139	.067	.377	.052	.224	.051	.212	.046	.195	.136	.19	.111	.249	.40
4.0	37.8	40.1	27.0	12.6	.7466	.177	.164	.099	.361	.093	.237	.094	.221	.087	.201	.153	.20	.142	.252	.45
4.5	38.5	41.3	27.2	11.8	.6666	.197	.191	.134	.299	.136	.253	.135	.239	.125	.215	.174	.22	.180	.258	.50
5.1	39.2	42.4	27.5	10.3	.5721	.217	.218	.163	.271	.168	.266	.176	.266	.157	.239	.186	.24	.205	.262	.55
5.6	39.5	43.1	27.7	12.5	.5818	.237	.233	.182	.331	.183	.270	.195	.274	.197	.255	.189	.26	.218	.281	.60
6.3	39.7	43.8	27.9	13.1	.5398	.256	.254	.204	.322	.206	.286	.224	.265	.230	.271	.224	.29	.243	.309	.65
7.0	39.8	44.3	28.1	13.6	.5176	.276	.270	.221	.346	.229	.304	.253	.279	.257	.282	.251	.30	.264	.330	.70
7.8	39.9	44.8	28.3	13.8	.5420	.295	.289	.242	.409	.251	.318	.280	.305	.275	.294	.271	.30	.257	.346	.75
8.6	40.0	45.2	28.5	12.6	.4968	.315	.316	.269	.326	.278	.342	.310	.335	.308	.314	.296	.33	.303	.367	.80
9.4	39.8	45.4	28.7	14.0	.5193	.335	.335	.289	.347	.300	.364	.336	.356	.318	.328	.318	.35	.323	.386	.85
10.3	39.8	45.7	28.9	14.0	.4792	.355	.351	.320	.347	.330	.379	.359	.374	.340	.359	.346	.37	.337	.401	.90
11.4	39.7	46.0	29.3	17.9	.4214	.374	.375	.349	.367	.354	.402	.383	.375	.348	.369	.365	.39	.372	.414	.95
12.8	39.3	45.5	29.8	16.7	.4355	.394	.398	.370	.382	.377	.429	.408	.376	.371	.399	.390	.39	.386	.444	1.00
14.4	39.2	45.3	29.8	.7	.0621	.394	.388	.371	.367	.378	.391	.407	.383	.413	.397	.366	.41	.400	.451	1.05
15.8	38.4	44.3	29.4	-2.3	.0662	.394	.382	.370	.360	.378	.374	.412	.413	.407	.386	.378	.40	.400	.466	1.10
17.3	38.2	44.0	29.3	5.3	-.0014	.394	.382	.378	.364	.382	.372	.414	.414	.404	.360	.380	.40	.397	.472	1.15
18.8	37.3	42.8	28.9	3.0	.0888	.394	.389	.388	.369	.388	.372	.426	.398	.399	.393	.401	.38	.404	.406	1.20
20.2	36.9	42.2	28.7	-.8	.2219	.394	.376	.377	.362	.379	.350	.424	.420	.407	.394	.321	.40	.416	.489	1.25
21.7	37.4	42.8	28.9	4.3	-.1508	.394	.377	.381	.368	.377	.353	.421	.413	.402	.367	.382	.39	.417	.469	1.30
23.2	36.5	41.6	28.6	-4.7	.0801	.394	.376	.381	.373	.381	.349	.427	.424	.362	.385	.367	.37	.426	.495	1.35
24.6	37.0	42.3	28.7	-4.1	-.2786	.394	.368	.380	.366	.376	.340	.419	.414	.396	.399	387	.38	.421	.476	1.40
26.1	36.5	41.7	28.5	-1.3	.1222	.394	.368	.384	.366	.379	338	.418	.414	.390	.392	.389	.38	.408	.492	1.45
27.6	36.8	42.0	28.7	-.8	-.1346	.394	.375	.398	.374	.386	.347	.433	.428	.331	.360	.377	.40	.416	.498	1.50
29.1	36.3	41.4	28.5	10.4	.2135	.394	.363	.390	.363	.377	.334	.420	.404	.385	.386	.395	.38	.421	.497	1.55
30.5	35.8	40.8	28.2	-3.1	-.0638	.394	.366	.399	.368	.377	.337	.422	.411	.368	.383	.402	.38	.412	.497	1.60
32.0	35.8	40.6	28.2	1.9	.0593	.394	.357	.395	.362	.375	.331	.419	.412	.375	.392	.400	.38	.419	.499	1.65
33.5	35.3	39.9	28.0	.6	.1551	.394	.358	.401	.367	.378	.327	.421	.400	.352	390	.401	.37	.420	.526	1.70
34.9	35.5	40.3	28.2	13.0	.1840	.394	.359	.409	.370	.382	.331	.425	.399	.369	.392	.396	.36	.405	.523	1.75
36.4	35.9	40.7	28.3	5.7	.0294	.394	.374	.416	.380	.392	.343	.426	.389	.370	.373	.374	.37	.409	.502	1.80
37.9	35.2	39.9	28.1	.4	.2202	.394	.372	.424	.381	.402	.347	.433	.379	.370	357	.412	.34	.420	.489	1.85
39.3	33.8	37.8	27.5	13.4	.5277	.394	.366	.434	.366	.404	.334	.444	.396	.359	.347	.420	.36	.372	.517	1.90
40.8	34.5	38.8	27.8	1.5	-.3856	.394	.367	.425	.363	.399	.331	.430	.385	.356	.374	.424	.34	.411	.510	1.95
42.3	35.7	40.5	28.4	-25.0	-.3836	.394	.375	.426	.378	.397	.336	.429	.344	.375	.385	.416	.35	.408	.498	2.00
43.7	34.9	39.3	28.0	3.6	.1861	.394	.382	.436	.384	.401	.336	.440	.299	.383	.367	.424	.35	.374	.543	2.05
45.2	34.5	38.7	27.8	18.8	.1273	.394	.373	.433	.374	.404	.333	.437	.346	.373	.386	.433	.34	.373	.509	2.10
46.7	35.0	39.4	28.1	-6.9	-.1267	.394	.371	.425	.373	.397	.328	.430	.400	.353	.362	.403	.36	.404	.513	2.15
48.1	34.7	39.1	28.0	-11.6	-.1261	.394	.372	.424	.368	.400	.331	.426	.358	.379	380	.421	.36	.396	.504	2.20
49.6	34.0	38.1	27.6	8.4	.3664	.394	.385	.429	.361	.417	.334	.450	.382	.358	.373	.422	.33	.407	.474	2.25
51.1	34.7	39.0	27.9	9.5	-.1004	.394	.389	.430	.379	.411	.340	.443	.339	.362	.351	.411	.34	.410	.506	2.30
52.6	36.1	40.9	28.7	-7.3	-.2213	.394	.396	.435	.394	.419	.359	.444	.346	.383	.341	.434	.34	.371	.461	2.35
54.0	34.5	38.8	27.9	-1.3	.1615	.394	.385	.430	.383	.406	.342	.438	.380	.394	.375	.386	.31	.404	.488	2.40
55.5	34.1	38.2	27.7	.1	.0814	.394	.391	.435	.386	.413	.347	.442	.341	.395	.361	.403	.33	.427	.448	2.45

UNCLASSIFIED

Table 7 — Normalized Mean Local Pressurant Fractions, Test Configuration 3

NORMALIZED MEAN LOCAL PRESSURANT FRACTIONS

LOCATIONS I

1	2	3	4	5	6	7	8	9	10	11	12	13	TAU
0.000	0.000	0.000	0.000	0.000	0.000	0.000	0.000	0.000	0.000	0.000	0.000	0.000	0.00
.361	.509	1.522	.688	.423	-.390	.734	-2.085	-.878	-.775	-.337	-.342	1.222	.05
.322	.315	1.492	.474	.556	-.509	.768	-1.858	-.568	-.544	-.190	-.277	1.319	.10
.292	.089	1.223	.204	.644	-.447	.661	-1.278	-.136	-.208	.025	-.134	1.017	.15
.239	-.042	1.032	.021	.655	-.340	.553	-.745	.218	.079	.209	.001	.720	.20
.236	-.019	.989	-.006	.608	-.223	.534	-.446	.334	.176	.312	.102	.653	.25
.242	.007	.933	-.022	.552	-.104	.540	-.185	.424	.254	.408	.199	.652	.30
.292	.098	.938	.048	.548	.022	.534	-.014	.467	.305	.442	.234	.633	.35
.353	.170	.955	.131	.567	.131	.539	.116	.495	.346	.483	.281	.632	.40
.417	.250	.915	.235	.601	.237	.562	.220	.509	.387	.518	.361	.639	.45
.484	.339	.759	.346	.643	.343	.606	.316	.546	.441	.566	.458	.654	.50
.554	.414	.689	.427	.676	.447	.674	.398	.608	.472	.613	.520	.664	.55
.592	.462	.839	.464	.684	.494	.696	.499	.648	.478	.678	.554	.714	.60
.644	.519	.816	.524	.727	.568	.674	.584	.689	.569	.737	.617	.784	.65
.686	.562	.877	.582	.771	.642	.709	.652	.716	.636	.760	.669	.838	.70
.733	.615	1.037	.636	.806	.711	.774	.697	.745	.689	.779	.651	.878	.75
.801	.682	.826	.707	.867	.786	.851	.782	.797	.750	.853	.768	.931	.80
.849	.733	.881	.762	.923	.852	.904	.806	.832	.808	.902	.820	.979	.85
.891	.811	.880	.837	.961	.910	.948	.862	.910	.878	.938	.856	1.019	.90
.953	.886	.930	.898	1.021	.971	.952	.882	.936	.927	.994	.944	1.052	.95
1.010	.940	.969	.957	1.089	1.035	.955	.940	1.012	.991	.996	.979	1.127	1.00
.984	.941	.931	.960	.992	1.034	.971	1.048	1.008	.928	1.040	1.016	1.145	1.05
.969	.940	.915	.959	.949	1.046	1.047	1.034	.979	.959	1.022	1.015	1.166	1.10
.969	.959	.923	.970	.943	1.050	1.050	1.026	.914	.964	1.028	1.008	1.197	1.15
.987	.984	.936	.984	.943	1.080	1.011	1.013	1.012	1.017	.977	1.025	1.030	1.20
.954	.958	.919	.961	.889	1.076	1.067	1.033	.999	.816	1.033	1.054	1.241	1.25
.956	.968	.934	.956	.895	1.069	1.047	1.019	.930	.969	1.010	1.058	1.191	1.30
.955	.967	.947	.967	.884	1.083	1.075	.918	.978	.931	.958	1.081	1.255	1.35
.933	.964	.930	.953	.863	1.064	1.051	1.005	1.013	.982	.964	1.068	1.209	1.40
.933	.974	.929	.961	.857	1.060	1.050	.991	.994	.988	.975	1.035	1.250	1.45
.952	1.010	.950	.980	.881	1.099	1.085	.840	.913	.957	1.014	1.055	1.263	1.50
.920	.989	.920	.957	.847	1.066	1.026	.977	.980	1.002	.987	1.068	1.261	1.55
.928	1.013	.934	.956	.855	1.071	1.042	.933	.972	1.020	.969	1.045	1.261	1.60
.906	1.002	.919	.952	.839	1.063	1.046	.951	.995	1.015	.983	1.062	1.266	1.65
.909	1.018	.932	.958	.831	1.067	1.016	.893	.991	1.017	.963	1.066	1.340	1.70
.912	1.037	.938	.969	.840	1.080	1.013	.936	.994	1.005	.922	1.027	1.327	1.75
.948	1.056	.965	.995	.870	1.082	.988	.938	.946	.948	.952	1.039	1.274	1.80
.943	1.075	.967	1.021	.879	1.098	.961	.938	.905	1.045	.865	1.065	1.240	1.85
.929	1.101	.929	1.025	.847	1.126	1.005	.912	.881	1.067	.922	.943	1.312	1.90
.931	1.079	.921	1.013	.841	1.091	.977	.904	.948	1.075	.885	1.042	1.293	1.95
.952	1.080	.959	1.007	.853	1.089	.873	.952	.976	1.054	.901	1.036	1.264	2.00
.969	1.106	.975	1.017	.853	1.116	.759	.972	.931	1.075	.901	.948	1.378	2.05
.947	1.098	.948	1.026	.845	1.110	.877	.948	.978	1.098	.886	.946	1.291	2.10
.941	1.079	.946	1.008	.833	1.090	1.015	.896	.919	1.022	.921	1.024	1.303	2.15
.943	1.075	.935	1.014	.840	1.082	.908	.961	.963	1.068	.926	1.005	1.279	2.20
.976	1.089	.915	1.058	.847	1.141	.969	.909	.946	1.070	.845	1.034	1.202	2.25
.986	1.092	.962	1.044	.862	1.125	.860	.919	.891	1.043	.885	1.041	1.288	2.30
1.005	1.104	.999	1.062	.912	1.126	.879	.971	.866	1.102	.865	.941	1.170	2.35
.978	1.091	.972	1.030	.868	1.110	.963	1.001	.950	.981	.791	1.024	1.239	2.40
.993	1.103	.980	1.047	.881	1.122	.865	1.002	.916	1.023	.847	1.082	1.137	2.45

Table 8 — Standard Deviation of Mean Local Pressurant Fractions, Test Configuration 3

STANDARD DEVIATION OF MEAN LOCAL PRESSURANT FRACTIONS

LOCATIONS I

1	2	3	4	5	6	7	8	9	10	11	12	13	TAU
0.000	0.000	0.000	0.000	0.000	0.000	0.000	0.000	0.000	0.000	0.000	0.000	0.000	0.00
.673	.792	1.543	.894	.603	1.254	.781	1.893	.946	.917	.666	.647	1.796	.05
.564	.710	1.074	.716	.487	.961	.575	1.311	.739	.751	.538	.621	2.171	.10
.419	.580	.810	.529	.351	.627	.396	.875	.522	.560	.393	.517	1.590	.15
.303	.444	.913	.407	.244	.308	.250	.635	.311	.421	.299	.430	1.019	.20
.206	.231	.814	.192	.157	.162	.150	.432	.161	.303	.153	.283	.812	.25
.176	.075	.715	.086	.158	.116	.124	.282	.096	.234	.117	.178	.694	.30
.131	.074	.741	.076	.141	.091	.104	.212	.094	.230	.125	.188	.583	.35
.113	.081	.822	.075	.145	.093	.096	.165	.089	.222	.110	.215	.487	.40
.103	.076	.746	.064	.143	.089	.088	.149	.073	.180	.078	.171	.394	.45
.089	.062	.430	.036	.118	.069	.078	.148	.058	.124	.052	.107	.283	.50
.069	.051	.290	.048	.104	.048	.041	.153	.053	.131	.060	.101	.165	.55
.061	.036	.337	.037	.090	.039	.051	.091	.043	.243	.054	.080	.215	.60
.047	.036	.211	.041	.086	.035	.189	.055	.040	.202	.038	.051	.319	.65
.033	.033	.336	.034	.059	.042	.146	.069	.047	.141	.064	.058	.381	.70
.046	.060	.713	.058	.051	.046	.116	.091	.070	.166	.142	.200	.356	.75
.048	.033	.036	.042	.070	.066	.052	.044	.043	.128	.054	.066	.357	.80
.049	.030	.080	.033	.070	.065	.032	.083	.060	.128	.029	.045	.354	.85
.052	.037	.037	.033	.058	.068	.043	.065	.033	.126	.043	.071	.309	.90
.036	.047	.048	.038	.059	.059	.113	.131	.081	.133	.061	.031	.251	.95
.043	.059	.044	.044	.073	.070	.199	.217	.045	.146	.116	.050	.357	1.00
.040	.043	.071	.032	.060	.094	.178	.050	.043	.179	.034	.035	.416	1.05
.038	.042	.091	.052	.069	.103	.031	.060	.050	.158	.052	.030	.517	1.10
.046	.027	.070	.046	.055	.087	.047	.054	.141	.177	.041	.051	.486	1.15
.063	.045	.076	.043	.066	.106	.132	.067	.057	.177	.116	.094	.209	1.20
.053	.037	.101	.060	.076	.122	.062	.052	.063	.456	.044	.088	.554	1.25
.047	.030	.083	.060	.070	.086	.087	.051	.145	.185	.033	.095	.370	1.30
.036	.034	.061	.062	.075	.077	.076	.328	.129	.233	.203	.116	.509	1.35
.053	.034	.069	.088	.096	.087	.069	.060	.053	.193	.164	.093	.559	1.40
.058	.030	.074	.098	.090	.105	.059	.059	.068	.203	.108	.092	.485	1.45
.061	.076	.082	.080	.060	.120	.079	.277	.283	.213	.054	.095	.501	1.50
.064	.047	.080	.104	.098	.098	.106	.061	.109	.218	.057	.093	.516	1.55
.064	.063	.067	.105	.094	.092	.061	.142	.115	.214	.103	.089	.536	1.60
.073	.058	.080	.122	.114	.105	.083	.077	.094	.222	.079	.102	.565	1.65
.095	.062	.083	.145	.165	.110	.099	.173	.109	.204	.102	.115	.781	1.70
.109	.076	.098	.154	.171	.138	.117	.100	.111	.161	.138	.130	.805	1.75
.067	.071	.070	.103	.087	.104	.133	.064	.108	.351	.070	.125	.552	1.80
.095	.087	.104	.122	.083	.133	.191	.101	.157	.224	.277	.108	.501	1.85
.090	.096	.123	.145	.089	.175	.062	.137	.186	.230	.053	.256	.640	1.90
.069	.070	.086	.131	.111	.144	.110	.091	.075	.206	.183	.092	.580	1.95
.072	.053	.068	.105	.097	.116	.339	.084	.046	.219	.092	.102	.512	2.00
.110	.107	.097	.111	.095	.158	.723	.126	.122	.213	.092	.273	.820	2.05
.107	.076	.107	.120	.125	.148	.344	.097	.059	.240	.139	.215	.586	2.10
.123	.093	.109	.122	.132	.133	.091	.212	.133	.105	.082	.126	.608	2.15
.094	.080	.089	.124	.122	.140	.222	.088	.072	.220	.067	.112	.586	2.20
.104	.147	.113	.220	.131	.308	.132	.183	.068	.251	.212	.102	.411	2.25
.095	.130	.081	.134	.092	.188	.383	.112	.219	.229	.129	.069	.643	2.30
.167	.166	.158	.172	.155	.190	.342	.125	.291	.253	.201	.283	.229	2.35
.089	.092	.075	.094	.079	.130	.150	.092	.080	.279	.269	.065	.471	2.40
.148	.145	.124	.138	.098	.176	.275	.112	.154	.229	.243	.092	.142	2.45

UNCLASSIFIED

Table 9 — Deviations of Mean Local Pressurant Fractions, Test Configuration 3

DEVIATIONS OF MEAN LOCAL PRESSURANT FRACTIONS

LOCATIONS I

1	2	3	4	5	6	7	8	9	10	11	12	13	TAU
0.000	0.000	0.000	0.000	0.000	0.000	0.000	0.000	0.000	0.000	0.000	0.000	0.000	0.00
.310	.458	1.471	.637	.373	-.441	.684	-2.135	-.928	-.825	-.387	-.392	1.172	.05
.222	.215	1.392	.374	.456	-.609	.668	-1.958	-.668	-.643	-.290	-.377	1.219	.10
.142	-.061	1.073	.054	.494	-.597	.511	-1.428	-.286	-.357	-.125	-.284	.867	.15
.039	-.242	.833	-.179	.455	-.540	.353	-.945	.018	-.121	.009	-.199	.520	.20
-.014	-.270	.738	-.257	.357	-.474	.283	-.696	.084	-.075	.062	-.148	.402	.25
-.058	-.293	.633	-.322	.251	-.404	.240	-.485	.124	-.046	.108	-.101	.352	.30
-.059	-.253	.587	-.303	.197	-.329	.183	-.365	.117	-.045	.091	-.116	.282	.35
-.047	-.230	.556	-.269	.167	-.269	.139	-.283	.095	-.054	.083	-.119	.232	.40
-.034	-.200	.465	-.215	.151	-.213	.111	-.230	.059	-.063	.067	-.089	.188	.45
-.016	-.161	.259	-.154	.143	-.156	.106	-.184	.046	-.059	.066	-.042	.154	.50
.004	-.136	.139	-.123	.126	-.103	.125	-.152	.058	-.078	.063	-.030	.114	.55
-.008	-.138	.239	-.136	.084	-.106	.096	-.101	.048	-.122	.078	-.046	.113	.60
-.005	-.131	.167	-.126	.078	-.082	.024	-.066	.039	-.080	.087	-.033	.135	.65
-.014	-.138	.178	-.118	.071	-.057	.010	-.047	.017	-.063	.061	-.031	.139	.70
-.016	-.134	.288	-.113	.056	-.039	.025	-.052	-.004	-.061	.030	-.098	.129	.75
.001	-.118	.026	-.094	.067	-.014	.050	-.018	-.003	-.050	.053	-.032	.131	.80
-.001	-.118	.031	-.089	.073	.001	.054	-.044	-.018	-.043	.052	-.030	.129	.85
-.009	-.089	-.020	-.063	.061	.010	.048	-.038	.010	-.022	.038	-.044	.119	.90
.003	-.063	-.019	-.051	.071	.022	.003	-.068	-.013	-.023	.044	-.006	.102	.95
.010	-.060	-.031	-.043	.089	.035	-.045	-.060	.012	-.009	-.004	-.021	.127	1.00
-.016	-.059	-.069	-.040	-.008	.034	-.029	.048	.008	-.072	.040	.016	.145	1.05
-.031	-.060	-.085	-.041	-.051	.046	.047	.034	-.021	-.041	.022	.015	.166	1.10
-.031	-.041	-.077	-.030	-.057	.050	.050	.026	-.086	-.036	.028	.008	.197	1.15
-.013	-.016	-.064	-.016	-.057	.080	.011	.013	.012	.017	-.023	.025	.030	1.20
-.046	-.042	-.081	-.039	-.111	.076	.067	.033	-.001	-.184	.033	.054	.241	1.25
-.044	-.032	-.066	-.044	-.105	.069	.047	.019	-.070	-.031	.010	.058	.191	1.30
-.045	-.033	-.053	-.033	-.116	.083	.075	-.082	-.022	-.069	-.042	.081	.255	1.35
-.067	-.036	-.070	-.047	-.137	.064	.051	.005	.013	-.018	-.036	.068	.209	1.40
-.067	-.026	-.071	-.039	-.143	.060	.050	-.009	-.006	-.012	-.025	.035	.250	1.45
-.048	.010	-.050	-.020	-.119	.099	.085	-.160	-.087	-.043	.014	.055	.263	1.50
-.080	-.011	-.080	-.043	-.153	.066	.026	-.023	-.020	.002	-.013	.068	.261	1.55
-.072	.013	-.066	-.044	-.145	.071	.042	-.067	-.028	.020	-.031	.045	.261	1.60
-.094	.002	-.081	-.048	-.161	.063	.046	-.049	-.005	.015	-.017	.062	.266	1.65
-.091	.018	-.068	-.042	-.169	.067	.016	-.107	-.009	.017	-.037	.066	.340	1.70
-.088	.037	-.062	-.031	-.160	.080	.013	-.064	-.006	.005	-.078	.027	.327	1.75
-.052	.056	-.035	-.005	-.130	.082	-.012	-.062	-.054	-.052	-.048	.039	.274	1.80
-.057	.075	-.033	.021	-.121	.098	-.039	-.062	-.095	.045	-.135	.065	.240	1.85
-.071	.101	-.071	.025	-.153	.126	.005	-.088	-.119	.067	-.078	-.057	.312	1.90
-.069	.079	-.079	.013	-.159	.091	-.023	-.096	-.052	.075	-.115	.042	.293	1.95
-.048	.080	-.041	.007	-.147	.089	-.127	-.048	-.024	.054	-.099	.036	.264	2.00
-.031	.106	-.025	.017	-.147	.116	-.241	-.028	-.069	.075	-.099	-.052	.378	2.05
-.053	.098	-.052	.026	-.155	.110	-.123	-.052	-.022	.098	-.114	-.054	.291	2.10
-.059	.079	-.054	.008	-.167	.090	.015	-.104	-.081	.022	-.079	.024	.303	2.15
-.057	.075	-.065	.014	-.160	.082	-.092	-.039	-.037	.068	-.074	.005	.279	2.20
-.024	.089	-.085	.058	-.153	.141	-.031	-.091	-.054	.070	-.155	.034	.202	2.25
-.014	.092	-.038	.044	-.138	.125	-.140	-.081	-.109	.043	-.115	.041	.288	2.30
.005	.104	-.001	.062	-.088	.126	-.121	-.029	-.134	.102	-.135	-.059	.170	2.35
-.022	.091	-.028	.030	-.132	.110	-.037	.001	-.050	-.019	-.209	.024	.239	2.40
-.007	.103	-.020	.047	-.119	.122	-.135	.002	-.084	.023	-.153	.082	.137	2.45

9 CASES

Table 10A — Scaling Run 200, Test Configuration 1: One 1.52 cm Nozzle

5 C METER CHAMBER OBSTRUCTED GAS MIXING RUN 200

TIME (SEC)	PRESSURANT FOW - TOTAL, P (BAR)	T (DEG K)	FILL-TANK P (BAR)	THERMOCOUPLES LOCATION I T(DEG K) 1	2	3	4	5	6	7	8	9	10	11	12	13
-5	***	***	1.040	304.2	304.0	304.0	304.0	303.6	304.2	302.2	303.6	302.2	304.8	303.5	302.9	302.7
-4	***	***	1.054	304.2	304.0	304.0	304.1	303.6	304.2	302.0	302.5	302.2	303.0	303.2	302.1	303.3
-3	***	***	1.073	304.2	304.0	303.9	304.1	303.6	304.2	302.3	302.3	303.2	302.9	302.4	304.6	302.3
-2	***	***	1.033	304.2	304.0	303.9	304.0	303.6	304.2	302.2	303.4	302.1	304.0	303.1	304.5	303.0
-1	***	***	1.050	304.2	304.0	304.0	304.0	303.6	304.2	302.3	304.0	302.2	302.9	302.4	302.1	302.4
0	6.407	296.4	1.061	304.2	304.0	304.0	304.1	303.6	304.2	302.3	302.5	302.2	303.1	302.5	302.2	302.4
1	6.377	297.6	1.067	304.5	304.0	304.0	304.1	304.0	304.5	302.8	304.2	303.4	305.0	303.5	302.9	303.0
2	6.258	302.2	1.085	307.1	306.8	305.1	307.1	306.0	307.3	304.9	306.4	305.2	306.1	305.7	305.3	305.1
3	6.102	294.2	1.099	308.9	308.9	306.6	309.2	308.0	309.1	306.1	307.6	306.3	307.3	306.9	306.6	306.7
4	5.975	293.1	1.191	310.0	310.0	307.8	310.0	309.1	310.2	307.9	309.1	307.9	308.8	309.2	308.7	308.0
5	5.844	292.3	1.171	311.0	311.1	309.5	311.0	310.1	311.2	308.9	310.2	308.9	309.6	309.4	309.4	309.1
6	5.725	291.6	1.207	311.7	311.7	310.7	311.7	311.1	311.9	309.9	310.9	309.9	310.8	311.4	310.2	310.0
7	5.642	291.3	1.261	312.2	312.2	311.3	312.3	311.3	312.3	311.1	311.3	310.5	311.0	310.8	310.9	310.6
8	5.539	291.0	1.232	312.3	312.4	311.8	312.4	311.5	312.3	310.6	311.6	310.7	311.2	311.1	311.0	311.0
9	5.436	290.7	1.281	312.7	312.8	312.2	312.9	312.1	312.5	311.1	311.9	311.2	311.8	311.4	311.4	311.2
10	5.319	290.3	1.323	312.9	313.1	312.7	313.1	311.7	312.9	311.2	311.7	311.5	311.7	311.6	311.5	311.5
11	5.256	290.1	1.322	312.9	313.2	313.0	313.2	312.2	312.9	311.6	311.9	311.4	311.9	311.7	311.6	311.6
12	5.109	289.7	1.368	313.1	313.3	313.1	313.3	311.9	312.9	311.7	311.8	312.6	312.0	311.7	311.6	311.6
13	5.085	289.3	1.368	313.1	313.2	313.2	313.2	311.9	312.8	311.6	311.8	311.6	312.0	311.8	311.6	311.7
14	4.923	289.1	1.404	313.0	313.3	313.3	313.3	312.0	312.8	311.6	311.6	311.9	312.1	311.7	311.6	311.6
15	4.882	288.8	1.398	313.1	313.3	313.3	313.4	312.0	312.9	311.5	311.8	312.9	312.0	311.7	311.5	311.6
16	4.776	288.6	1.432	312.9	313.3	313.2	313.3	311.9	312.8	311.6	311.7	311.7	312.2	311.7	311.6	311.7
17	4.698	288.2	1.461	312.9	313.2	313.3	313.2	311.7	312.8	311.5	311.6	311.5	311.9	311.6	311.5	311.6
18	4.608	287.9	1.479	312.9	313.1	313.2	313.1	311.6	312.7	311.5	311.6	311.5	311.9	311.7	311.5	311.6
19	4.518	287.8	1.508	312.8	313.1	313.1	313.1	311.7	312.6	311.5	311.6	311.3	311.9	311.5	311.4	311.6
20	4.489	287.5	1.505	312.8	312.9	313.0	313.1	311.6	312.6	311.4	311.6	311.3	311.7	311.6	311.3	311.5
21	4.410	287.3	1.536	312.7	312.9	313.1	312.9	311.5	312.5	311.5	311.7	311.4	311.8	312.8	311.4	311.9
22	4.322	287.0	1.567	312.7	312.8	312.9	312.9	311.4	312.5	312.0	311.4	311.5	312.0	311.9	311.4	311.5
23	4.291	286.8	1.565	312.6	312.8	312.8	312.9	311.4	312.4	311.5	311.3	311.1	312.0	311.7	311.2	311.3
24	4.173	286.6	1.605	312.6	312.7	312.7	312.8	311.3	312.3	311.3	311.9	311.1	313.5	311.6	311.0	311.3
25	4.108	286.5	1.616	312.4	312.6	312.7	312.7	311.3	312.3	311.1	311.2	311.1	311.9	311.5	312.5	311.2
26	4.043	286.3	1.626	312.4	312.6	312.6	312.7	311.2	312.3	311.1	311.2	310.9	311.3	311.3	310.9	311.1
27	3.999	286.3	1.643	312.4	312.5	312.4	312.6	311.2	312.2	311.6	311.1	310.9	312.6	311.2	310.9	311.1
28	3.932	286.0	1.664	312.4	312.5	312.6	312.6	311.3	312.3	311.0	311.1	310.9	311.4	311.1	310.9	311.0
29	3.871	285.7	1.684	312.4	312.4	312.4	312.5	311.1	312.2	312.4	311.2	312.3	311.6	311.4	310.9	310.9
30	3.809	285.7	1.700	312.3	312.4	312.4	312.4	311.1	312.0	310.9	311.1	311.0	311.2	311.1	310.8	310.9
31	3.742	285.4	1.724	312.3	312.3	312.3	312.4	311.1	312.0	311.0	310.9	310.9	311.1	311.1	310.9	311.6
32	3.733	285.2	1.716	312.2	312.3	312.3	312.3	311.3	312.0	311.0	310.9	310.8	311.1	311.9	310.7	310.9
33	3.679	295.2	1.743	312.2	312.3	312.3	312.3	311.0	312.1	310.8	310.9	310.8	311.1	311.0	310.7	311.5
34	3.601	295.0	1.779	312.2	312.3	312.3	312.3	311.2	312.0	310.7	310.8	310.7	313.0	311.1	310.6	312.1
35	3.604	286.6	1.760	311.9	312.0	312.2	312.1	310.9	311.7	310.7	311.0	310.5	310.8	310.8	311.0	310.8
36	***	***	1.774	311.9	311.9	312.2	311.9	311.0	311.7	310.3	310.7	310.4	311.0	311.0	310.2	311.3
37	***	***	1.758	311.6	311.6	312.0	311.6	310.9	311.5	310.1	310.2	310.2	310.6	310.4	310.1	310.3
38	***	***	1.764	311.4	311.3	311.6	311.5	310.9	311.2	310.3	310.9	310.0	310.3	310.1	309.8	310.0
39	***	***	1.766	311.4	311.2	311.6	311.3	310.7	311.2	310.8	310.2	311.1	311.1	310.0	310.3	310.2

COORDINATES

I	R (M)	THETA (DEG)	Z (M)
1	0.229	00	0.152
2	0.229	00	0.000
3	0.076	00	0.152
4	0.102	00	0.076
5	0.076	00	-0.076
6	0.152	00	0.152
7	0.229	00	0.762
8	0.229	00	0.991
9	0.076	00	0.076
10	0.229	00	-0.076
11	0.152	00	0.762
12	0.229	00	0.914
13	0.229	00	0.838

(Table continues)

UNCLASSIFIED

Table 10A — Scaling Run 200, Test Configuration 1: One 1.52 cm Nozzle (Continued)

5 C METER CHAMBER OBSTRUCTED GAS MIXING RUN 107

TIME (SEC)	PRESSURANT FOW - TOTAL P (BAR)	T (DEG K)	FILL-TANK P (BAR)	THERMOCOUPLES LOCATION I T(DEG K) 1	2	3	4	5	6	7	8	9	10	11	12	13
40	***	***	1.764	311.3	311.0	311.4	311.2	310.6	311.1	310.5	310.5	309.9	310.3	310.1	310.2	310.0
41	***	***	1.774	311.1	310.9	311.3	311.0	310.6	310.9	309.6	310.0	309.4	311.5	310.2	309.6	310.4
42	***	***	1.764	311.0	310.7	311.1	310.9	310.4	310.8	309.7	309.3	309.7	309.6	309.5	309.3	309.4
43	***	***	1.740	310.9	310.7	311.0	310.9	310.4	310.7	309.2	309.2	308.9	309.4	309.3	308.6	309.1
48	***	***	1.765	310.2	310.0	310.3	310.2	310.0	310.0	308.5	309.4	308.1	308.8	308.6	307.8	308.5
53	***	***	1.738	309.8	309.5	309.8	309.8	309.6	309.6	307.7	308.2	307.5	307.8	307.9	307.5	307.1
58	***	***	1.755	309.5	308.8	309.4	309.4	309.3	309.3	307.6	308.0	307.3	307.5	307.9	307.0	307.5
63	***	***	1.740	309.3	308.4	309.0	309.0	308.9	308.8	307.1	307.6	307.0	307.5	307.8	306.7	307.2
68	***	***	1.753	308.9	308.0	308.6	308.6	308.6	308.7	306.7	307.3	306.6	306.6	307.1	306.4	306.6
73	***	***	1.747	308.7	307.8	308.3	308.2	308.4	308.2	306.3	306.7	306.3	306.4	307.5	306.1	306.2
78	***	***	1.768	308.4	307.5	308.2	308.0	308.1	308.1	306.1	306.3	305.9	306.2	306.5	305.7	305.9
83	***	***	1.771	308.2	307.5	308.0	307.8	308.0	308.0	305.5	306.8	305.9	307.2	306.4	306.0	305.8
88	***	***	1.734	308.1	307.4	307.9	307.7	307.9	307.9	305.7	305.9	305.8	306.2	306.1	305.2	305.5
93	***	***	1.738	307.9	307.3	307.7	307.5	307.8	307.6	305.9	307.3	305.8	306.1	306.1	305.2	305.7
103	***	***	1.755	307.6	307.0	307.4	307.2	307.6	307.4	305.7	305.7	305.5	305.9	305.9	305.2	305.5
113	***	***	1.758	307.4	306.9	307.3	307.0	307.4	307.3	305.4	305.7	305.3	305.9	305.7	305.2	305.3
123	***	***	1.755	307.2	306.7	307.1	306.8	307.3	307.1	305.2	305.2	305.1	305.7	305.4	305.0	305.2
133	***	***	1.733	307.0	306.6	307.0	306.6	307.1	307.0	304.9	305.2	305.0	305.5	305.8	305.0	305.2
143	***	***	1.745	306.8	306.6	306.8	306.6	307.3	306.9	304.9	305.1	305.0	305.4	305.9	304.8	304.9
153	***	***	1.764	306.8	306.4	306.8	306.5	307.2	306.9	304.8	304.9	304.7	305.3	305.0	304.7	304.8
163	***	***	1.759	306.7	306.4	306.8	306.4	307.0	306.8	304.9	305.2	304.8	305.6	305.1	304.9	304.9
173	***	***	1.759	306.6	306.3	306.6	306.2	307.1	306.9	304.8	304.9	304.8	305.5	305.1	305.0	304.9
183	***	***	1.757	306.6	306.2	306.6	306.2	307.1	306.8	304.5	304.7	304.5	305.2	304.6	304.5	304.5
193	***	***	1.732	306.6	306.2	306.6	306.1	307.1	306.7	304.4	304.8	304.6	305.2	304.9	304.9	304.6
203	***	***	1.764	306.5	306.2	306.6	306.0	306.9	306.6	304.5	304.5	304.5	305.3	304.8	304.6	304.5
213	***	***	1.741	306.4	306.1	306.6	305.9	306.6	306.6	304.5	304.8	305.2	305.2	305.0	304.5	305.7
223	***	***	1.769	306.4	306.1	306.6	305.9	306.6	306.6	304.5	304.7	304.5	305.8	305.3	304.5	304.9
233	***	***	1.757	306.4	306.0	306.6	305.9	306.6	306.6	304.3	304.5	304.5	305.1	304.5	304.5	304.4
243	***	***	1.734	306.3	305.9	306.6	305.8	306.8	306.6	304.2	304.5	304.5	305.0	304.5	304.4	304.4
253	***	***	1.761	306.3	305.9	306.5	305.8	306.8	306.6	304.4	304.5	304.4	305.1	304.5	306.1	306.1
263	***	***	1.741	306.2	305.9	306.4	305.8	306.7	306.6	304.2	304.6	304.5	305.1	304.5	304.4	304.5
273	***	***	1.751	306.2	305.9	306.4	305.8	306.6	306.6	304.4	304.5	304.9	305.2	304.8	304.5	304.5
283	***	***	1.755	306.2	305.9	306.4	305.8	306.6	306.6	304.1	304.5	304.4	305.0	304.3	304.4	304.2

Table 10B — Scaling Run 201, Test Configuration 1: One 1.52 cm Nozzle

5 C METER CHAMBER OBSTRUCTED GAS MIXING RUN 201

TIME (SEC)	PRESSURANT FOW - TOTAL, P (BAR)	T (DEG K)	FILL-TANK P (BAR)	THERMOCOUPLES LOCATION I T(DEG K) 1	2	3	4	5	6	7	8	9	10	11	12	13
-5	***	***	1.056	304.5	304.4	304.4	304.5	304.0	304.5	302.7	302.9	302.5	303.4	303.0	302.6	302.7
-4	***	***	1.053	304.5	304.4	304.4	304.5	304.0	304.5	302.7	302.9	302.6	303.4	303.0	302.6	302.7
-3	***	***	1.051	304.5	304.4	304.3	304.5	304.0	304.5	302.8	302.9	302.5	303.4	303.0	302.6	302.7
-2	***	***	1.073	304.5	304.5	304.4	304.5	304.0	304.5	302.7	302.9	302.6	303.4	303.1	302.6	302.7
-1	***	***	1.057	304.5	304.4	304.4	304.5	304.0	304.5	302.7	302.9	302.5	303.3	303.0	302.6	302.8
0	6.406	296.6	1.034	304.6	304.4	304.4	304.5	304.0	304.5	302.7	302.9	302.4	303.4	303.0	302.5	302.8
1	6.400	296.6	1.073	304.5	304.4	304.4	304.5	304.0	304.5	302.7	302.9	302.6	303.3	303.1	302.6	302.7
2	6.305	303.5	1.073	305.6	305.4	304.5	305.4	305.0	305.7	303.5	304.4	303.8	305.0	304.2	303.7	303.7
3	6.163	297.1	1.101	308.0	307.9	305.9	307.9	307.0	308.2	305.7	307.1	305.9	306.7	306.5	306.0	305.9
4	6.024	294.5	1.128	309.3	309.0	307.0	309.1	308.1	309.5	307.6	309.2	307.4	308.3	308.3	307.9	307.8
5	5.895	293.0	1.187	310.5	310.4	308.8	310.4	309.6	310.7	309.1	310.2	308.7	309.5	309.5	309.5	309.3
6	5.834	292.2	1.172	311.5	311.5	310.2	311.5	310.7	311.7	309.7	310.9	309.3	310.2	310.2	310.2	310.0
7	5.697	291.7	1.215	312.1	312.1	310.9	312.2	311.1	312.2	310.5	311.4	310.0	311.0	310.8	310.9	310.7
8	5.582	291.2	1.240	312.5	312.7	311.7	312.8	311.8	312.6	311.1	311.6	310.7	311.5	311.3	311.4	311.3
9	5.477	290.9	1.260	312.8	313.0	312.2	313.1	312.2	312.8	311.4	311.8	311.1	311.9	311.5	311.5	311.6
10	5.363	290.6	1.311	313.0	313.2	312.5	313.3	312.4	313.0	311.6	312.2	311.4	312.0	311.8	311.9	311.9
11	5.299	290.2	1.286	313.2	313.4	312.9	313.5	312.3	313.2	311.7	312.2	311.6	312.2	312.0	312.0	312.0
12	5.192	289.7	1.339	313.4	313.5	313.2	313.5	312.2	313.2	311.9	312.2	311.7	312.3	312.2	312.0	312.1
13	5.092	289.5	1.358	313.3	313.5	313.3	313.6	312.2	313.4	312.0	312.2	312.0	312.3	312.2	312.1	317.1
14	4.999	289.3	1.374	313.3	313.6	313.6	313.6	312.2	313.3	312.1	312.2	311.8	312.4	312.2	312.1	312.2
15	4.890	289.0	1.416	313.3	313.6	313.7	313.6	312.3	313.2	312.0	311.9	311.7	312.4	312.0	311.9	312.1
16	4.855	288.7	1.400	313.2	313.5	313.6	313.4	312.0	313.1	311.9	312.2	311.7	312.3	312.3	312.0	312.3
17	4.755	288.3	1.442	313.3	313.5	313.4	313.6	311.9	313.1	312.0	312.1	311.8	312.3	312.2	312.0	312.1
18	4.669	288.2	1.476	313.3	313.4	313.4	313.4	311.9	313.1	312.0	311.9	311.9	312.3	312.2	311.9	311.9
19	4.583	288.0	1.473	313.2	313.4	313.4	313.4	312.0	313.1	311.9	312.0	311.8	312.3	312.2	311.8	312.0
20	4.499	287.7	1.489	313.2	313.4	313.4	313.4	311.9	312.9	311.9	312.0	311.7	312.2	312.1	311.7	312.0
21	4.422	287.5	1.522	313.1	313.3	313.4	313.4	311.8	312.9	311.9	311.8	311.7	312.2	312.0	311.7	312.0
22	4.343	287.2	1.554	313.1	313.2	313.2	313.3	311.8	312.8	311.7	311.9	311.7	312.2	312.0	311.8	311.8
23	4.294	286.9	1.548	313.0	313.1	313.1	313.2	311.6	312.7	311.6	311.7	311.6	312.0	311.9	311.6	311.7
24	4.221	286.8	1.579	313.0	313.1	313.1	313.2	311.7	312.6	312.7	311.7	311.6	312.0	312.2	311.7	311.7
25	4.156	286.6	1.594	312.9	313.0	312.9	313.1	311.5	312.6	311.6	311.7	311.5	311.7	311.8	311.6	311.6
26	4.085	286.4	1.613	312.7	312.9	312.9	312.9	311.6	312.6	311.6	311.6	311.5	311.9	311.7	311.5	311.6
27	4.006	286.4	1.651	312.8	312.9	312.9	312.9	311.5	312.6	311.6	311.4	311.4	311.9	311.6	311.3	311.6
28	3.974	286.2	1.622	312.7	312.9	312.9	313.0	311.6	312.5	311.5	311.5	311.2	311.7	311.6	311.3	311.6
29	3.906	285.8	1.669	312.6	312.8	312.8	312.8	311.6	312.4	311.4	311.4	311.3	311.7	311.6	311.4	311.5
30	3.863	285.7	1.668	312.6	312.6	312.8	312.8	311.3	312.3	311.3	311.3	311.1	311.6	311.6	311.2	311.3
31	3.782	285.5	1.706	312.5	312.7	312.7	312.7	311.4	312.4	311.3	311.2	311.1	311.6	311.5	311.1	311.3
32	3.800	285.4	1.721	312.4	312.6	312.7	312.6	311.3	312.3	311.2	311.3	313.2	311.5	311.5	311.3	311.3
33	3.674	285.3	1.731	312.3	312.4	312.6	312.5	311.1	312.3	311.2	311.1	311.0	311.5	311.4	311.1	311.3
34	3.613	295.1	1.742	312.4	312.5	312.6	312.6	311.2	312.3	311.1	311.2	310.9	311.5	311.3	311.0	311.2
35	3.582	295.0	1.764	312.3	312.4	312.4	312.4	311.2	312.3	311.1	311.0	311.0	311.5	311.3	311.1	311.1
36	3.605	287.3	1.767	312.3	312.3	312.5	312.4	310.9	312.1	311.0	310.8	310.8	311.2	311.0	310.8	311.0
37	***	***	1.758	312.1	312.0	312.3	312.1	311.2	311.8	310.7	310.5	310.4	310.9	310.8	310.4	310.7
38	***	***	1.763	311.8	311.7	312.2	311.8	311.1	311.5	310.2	310.3	310.3	310.8	310.5	310.2	310.3
39	***	***	1.778	311.7	311.6	311.9	311.7	311.0	311.4	310.0	310.2	310.0	310.5	310.2	310.0	310.2

COORDINATES

I	R (M)	THETA (DEG)	Z (M)
1	0.229	00	0.152
2	0.229	00	0.000
3	0.076	00	0.152
4	0.102	00	0.076
5	0.076	00	-0.076
6	0.152	00	0.152
7	0.229	00	0.762
8	0.229	00	0.991
9	0.076	00	0.076
10	0.229	00	-0.076
11	0.152	00	0.762
12	0.229	00	0.914
13	0.229	00	0.836

(Table continues)

CLASSIFIED

Table 10B — Scaling Run 201, Test Configuration 1: One 1.52 cm Nozzle (Continued)

5 C METER CHAMBER OBSTRUCTED GAS MIXING RUN 107

TIME (SEC)	PRESSURANT FOW - TOTAL P (BAR)	T (DEG K)	FILL-TANK P (BAR)	THERMOCOUPLES LOCATION T T(DEG K) 1	2	3	4	5	6	7	8	9	10	11	12	13
40	***	***	1.745	311.5	311.4	311.7	311.6	311.0	311.1	309.8	310.1	310.0	311.1	310.2	309.8	310.0
41	***	***	1.767	311.3	311.1	311.5	311.3	310.9	310.9	309.6	309.8	309.7	310.1	309.9	309.7	309.8
42	***	***	1.762	311.2	311.0	311.4	311.1	310.8	310.9	309.5	309.7	309.5	310.0	309.7	309.5	309.6
43	***	***	1.754	311.1	310.9	311.2	311.1	310.6	310.9	309.5	309.6	309.4	309.8	309.7	309.3	309.5
44	***	***	1.781	311.0	310.8	311.1	311.0	310.6	310.7	309.3	309.4	309.3	309.6	309.5	309.1	309.3
49	***	***	1.763	310.4	310.1	310.4	310.3	310.2	310.1	308.7	308.8	308.4	308.9	308.8	308.2	308.6
54	***	***	1.742	310.0	309.7	309.9	310.0	309.8	309.7	308.1	308.4	307.9	308.5	308.5	307.7	308.0
59	***	***	1.741	309.6	309.4	309.5	309.6	309.6	309.4	307.9	308.1	307.6	308.2	308.2	308.1	308.4
64	***	***	1.740	309.4	308.9	309.3	309.3	309.4	309.1	307.5	307.6	307.4	308.1	307.9	306.7	307.4
69	***	***	1.745	309.2	308.5	308.9	308.9	309.1	308.8	307.0	307.3	307.0	307.2	307.6	306.6	307.1
74	***	***	1.762	308.8	308.2	308.5	308.7	308.8	308.5	306.7	306.8	306.8	307.0	307.3	306.3	306.6
79	***	***	1.772	308.5	308.0	308.3	308.4	308.4	308.2	306.6	306.5	306.6	306.7	306.9	305.9	306.6
84	***	***	1.745	308.3	307.8	308.1	308.1	308.2	308.2	306.3	306.4	306.4	306.6	306.7	305.9	306.1
89	***	***	1.741	308.2	307.7	308.0	308.0	308.1	308.1	306.1	306.2	306.2	306.6	306.6	305.8	306.0
94	***	***	1.756	308.2	307.8	308.0	308.0	308.1	308.1	306.1	306.2	306.0	306.6	306.6	305.9	307.0
104	***	***	1.759	308.0	307.5	307.9	307.8	308.1	308.0	305.9	306.1	305.9	306.4	306.3	305.7	305.9
114	***	***	1.757	307.6	307.3	307.6	307.4	307.9	307.6	305.7	305.8	305.8	306.2	306.1	305.5	305.7
124	***	***	1.747	307.5	307.1	307.5	307.2	307.9	307.5	305.5	305.7	305.4	306.0	305.9	305.7	305.5
134	***	***	1.746	307.3	307.0	307.3	307.0	307.7	307.3	305.3	305.5	305.3	305.9	305.7	305.3	305.4
144	***	***	1.773	307.2	306.8	307.1	306.8	307.6	307.3	305.3	305.3	305.2	305.9	305.4	305.2	305.3
154	***	***	1.741	307.1	306.8	307.1	306.8	307.6	307.3	305.1	305.3	305.2	305.9	306.1	305.1	305.2
164	***	***	1.766	307.1	306.7	307.1	306.6	307.5	307.1	305.2	305.2	305.0	305.8	305.2	305.1	305.2
174	***	***	1.741	307.0	306.6	307.1	306.6	307.6	307.1	305.0	305.2	305.0	305.6	305.2	305.1	305.1
184	***	***	1.760	307.0	306.6	307.1	306.6	307.5	307.1	305.0	305.2	304.8	305.7	305.1	305.0	305.0
194	***	***	1.770	306.9	306.6	307.0	306.6	307.4	307.1	304.9	305.2	304.8	305.7	305.1	304.9	305.0
204	***	***	1.764	306.9	306.6	307.0	306.6	307.4	307.0	304.8	305.0	304.8	305.7	305.0	304.9	304.9
214	***	***	1.737	306.8	306.6	306.9	306.4	307.3	307.0	304.8	304.9	304.8	305.6	305.0	304.8	305.0
224	***	***	1.738	306.8	306.6	306.9	306.4	307.2	306.9	304.6	304.9	304.7	305.5	304.9	304.8	304.8
234	***	***	1.754	306.7	306.6	306.8	306.4	307.1	306.9	304.6	304.8	304.7	305.5	304.9	304.9	304.9
244	***	***	1.756	306.7	306.6	306.9	306.4	307.1	306.9	304.6	304.8	304.7	305.4	304.8	304.8	304.7
254	***	***	1.745	306.7	306.5	306.9	306.4	307.1	306.8	304.6	305.1	304.8	305.5	304.8	304.8	304.7
264	***	***	1.745	306.6	306.5	306.8	306.3	307.0	306.8	304.8	304.8	304.6	305.4	304.8	304.6	304.8
274	***	***	1.757	306.6	306.4	306.8	306.3	306.9	306.8	304.5	304.6	304.6	305.4	304.7	304.8	304.6

Table 10C — Scaling Run 202, Test Configuration 1: One 1.52 cm Nozzle

5 C METER CHAMBER OBSTRUCTED GAS MIXING RUN 202

TIME (SEC)	PRESSURANT FOW - TOTAL, P (BAR)	T (DEG K)	FILL-TANK P (BAR)	THERMOCOUPLES LOCATION I T(DEG K) 1	2	3	4	5	6	7	8	9	10	11	12	13
-5	***	***	1.051	305.1	304.9	304.8	304.9	304.5	305.0	303.7	303.5	303.1	303.9	303.6	303.1	303.4
-4	***	***	1.065	305.1	304.9	304.8	304.9	304.5	305.0	303.3	303.5	303.1	303.9	303.5	303.1	303.2
-3	***	***	1.066	305.1	304.9	304.9	305.0	304.5	305.0	303.3	303.3	303.1	303.9	303.6	303.2	303.3
-2	***	***	1.045	305.1	304.9	304.8	304.9	304.5	305.0	303.1	303.5	303.1	303.9	306.6	303.1	303.1
-1	***	***	1.064	305.1	304.9	304.8	304.9	304.5	305.0	303.3	303.5	303.1	303.9	303.5	303.1	303.2
0	6.415	296.8	1.056	305.1	304.9	304.8	304.9	304.5	305.0	303.1	303.3	303.1	303.9	303.5	303.1	303.2
1	6.420	297.7	1.038	305.2	304.9	304.8	305.0	305.0	305.2	303.5	303.5	303.1	304.0	303.6	303.1	303.1
2	6.234	308.6	1.094	307.1	306.9	305.4	306.9	306.2	307.3	305.0	306.0	305.2	306.4	305.7	305.2	305.2
3	6.106	295.3	1.136	309.0	308.9	307.0	309.0	308.2	309.3	307.1	308.1	307.0	309.4	307.8	307.5	307.2
4	5.983	292.6	1.139	310.4	310.4	308.8	310.5	309.8	310.9	308.8	310.1	308.5	309.3	309.2	309.3	308.9
5	5.843	291.8	1.190	311.3	311.3	309.7	311.3	310.6	311.6	309.8	310.9	309.5	310.5	310.2	310.5	310.2
6	5.780	291.5	1.196	311.9	311.9	310.4	312.0	311.2	312.2	310.3	311.5	310.4	310.9	310.9	311.0	310.8
7	5.662	291.0	1.227	312.5	312.5	311.7	312.5	311.7	312.6	311.0	311.9	310.9	312.2	311.4	311.5	311.3
8	5.540	290.5	1.256	312.9	313.1	312.4	313.1	312.3	313.2	311.6	312.2	311.4	312.0	312.0	312.2	311.8
9	5.443	290.1	1.277	313.3	313.3	312.8	313.4	312.3	313.4	311.8	312.6	311.8	312.2	312.3	312.1	312.4
10	5.332	289.8	1.299	313.5	313.6	313.3	313.7	312.7	313.5	312.1	312.6	312.2	312.4	312.4	312.4	312.3
11	5.252	289.5	1.332	313.6	313.8	313.6	313.8	312.6	313.6	312.4	312.4	312.2	312.7	312.4	312.3	312.4
12	5.167	289.1	1.339	313.7	313.8	313.7	313.8	312.6	313.6	312.3	312.6	312.3	312.8	312.8	312.6	312.5
13	5.064	288.9	1.357	313.8	313.8	313.9	313.8	312.5	313.7	312.4	312.5	312.3	312.8	312.7	312.4	312.6
14	4.966	288.5	1.395	313.7	313.8	314.0	313.9	312.4	313.6	312.4	312.4	312.3	312.7	312.7	312.4	312.5
15	4.897	288.4	1.397	313.8	313.8	314.0	313.8	312.7	313.7	312.3	312.6	312.3	312.6	312.6	312.4	312.4
16	4.782	288.0	1.433	313.7	313.8	314.0	313.8	312.4	313.6	312.4	312.4	312.2	312.6	312.5	312.3	312.4
17	4.699	287.7	1.462	313.6	313.8	314.0	313.8	312.3	313.6	312.3	312.4	312.3	312.6	312.5	312.3	312.4
18	4.644	287.4	1.460	313.6	313.7	313.8	313.8	312.3	313.4	312.3	312.3	312.2	312.6	312.5	312.2	312.4
19	4.557	287.2	1.493	313.5	313.7	313.8	313.8	312.2	313.5	312.3	312.2	312.1	312.5	312.3	312.2	312.3
20	4.487	287.0	1.496	313.6	313.6	313.8	313.7	312.2	313.3	312.1	312.3	312.0	312.4	312.3	312.2	312.2
21	4.402	286.7	1.532	313.4	313.5	313.8	313.6	312.1	313.2	312.1	312.1	312.0	312.4	312.3	312.0	312.2
22	4.326	286.6	1.571	313.3	313.4	313.7	313.5	312.0	313.1	311.9	311.9	311.9	312.3	312.2	312.0	312.1
23	4.278	286.4	1.553	313.3	313.5	313.7	313.5	312.0	313.0	312.0	311.9	311.7	312.3	312.2	311.9	312.1
24	4.208	286.0	1.587	313.3	313.3	313.5	313.4	312.0	312.9	312.0	312.0	311.8	312.3	312.2	311.9	312.0
25	4.138	286.0	1.609	313.1	313.3	313.4	313.4	312.0	312.9	311.8	311.9	311.7	312.1	312.0	311.9	311.9
26	4.069	285.8	1.622	313.1	313.2	313.4	313.3	311.9	312.9	311.8	311.9	311.7	312.0	312.2	311.7	311.9
27	3.993	285.4	1.657	312.9	313.1	313.2	313.2	311.9	312.8	311.9	311.6	311.6	312.1	312.0	311.7	312.0
28	4.044	285.3	1.633	312.9	313.1	313.3	313.2	312.0	312.8	312.4	311.9	311.5	312.1	312.0	311.6	312.3
29	3.911	285.2	1.678	313.0	313.1	313.2	313.3	311.6	312.8	312.2	311.8	312.0	312.3	312.4	312.3	312.2
30	3.860	285.1	1.704	312.9	313.0	313.2	313.2	311.7	312.8	312.0	311.7	312.0	312.3	311.9	312.2	312.2
31	3.790	284.8	1.702	312.9	312.9	313.1	313.1	311.6	312.8	311.8	311.8	311.6	312.3	312.3	312.0	312.0
32	3.738	284.8	1.726	312.8	312.9	313.1	313.0	311.6	312.7	312.0	312.1	312.0	312.3	312.3	312.0	312.3
33	3.679	294.6	1.747	312.8	312.9	313.1	312.9	311.6	313.3	311.8	312.0	312.0	312.2	312.2	311.9	311.9
34	3.621	294.3	1.749	312.8	312.8	313.0	312.9	311.7	312.6	311.8	311.7	312.0	311.7	312.4	311.6	311.6
35	3.592	290.8	1.781	312.6	312.7	312.9	312.8	311.1	312.5	311.6	311.3	311.3	311.7	311.6	311.5	311.9
36	***	***	1.757	312.5	312.5	312.8	312.5	311.6	312.3	311.0	311.0	311.0	311.5	311.2	311.0	311.2
37	***	***	1.758	312.2	312.0	312.5	312.3	311.4	312.0	310.7	310.7	310.7	311.1	311.0	310.7	311.0
38	***	***	1.761	312.1	312.0	312.4	312.1	311.3	311.9	310.5	310.8	310.5	311.4	311.4	310.5	310.8
39	***	***	1.778	312.0	311.7	312.3	311.7	311.3	311.7	310.3	310.4	310.3	310.6	310.5	310.2	310.4

COORDINATES

I	R (M)	THETA (DEG)	Z (M)
1	0.229	00	0.152
2	0.229	00	0.000
3	0.076	00	0.152
4	0.102	00	0.076
5	0.076	00	-0.076
6	0.152	00	0.152
7	0.229	00	0.762
8	0.229	00	0.991
9	0.076	00	0.076
10	0.229	00	-0.076
11	0.152	00	0.762
12	0.229	00	0.914
13	0.229	00	0.838

(Table continues)

UNCLASSIFIED

Table 10C — Scaling Run 202, Test Configuration 1: One 1.52 cm Nozzle (Continued)

5 C METER CHAMBER OBSTRUCTED GAS MIXING RUN 107

TIME (SEC)	PRESSURANT FOW - TOTAL P (BAR)	T (DEG K)	FILL-TANK P (BAR)	THERMOCOUPLES LOCATION I T(DEG K) 1	2	3	4	5	6	7	8	9	10	11	12	13
40	***	***	1.740	311.7	311.5	312.1	311.6	311.1	311.5	310.2	310.3	310.2	310.4	310.7	310.8	310.4
41	***	***	1.766	311.4	311.1	311.8	311.4	310.9	311.2	310.0	310.2	310.0	310.2	310.3	309.8	310.2
42	***	***	1.763	311.3	311.0	311.7	311.1	310.9	311.0	309.8	310.0	310.0	310.2	310.2	309.9	310.0
43	***	***	1.752	311.1	310.9	311.5	311.0	310.8	310.9	309.7	309.9	309.7	310.0	310.1	309.4	310.0
48	***	***	1.758	310.7	310.4	310.7	310.7	310.5	310.4	309.5	309.4	309.3	309.5	309.6	309.0	309.4
53	***	***	1.761	310.2	310.0	310.3	310.2	310.2	310.2	308.7	308.8	308.7	308.9	309.0	308.2	308.7
58	***	***	1.766	310.0	309.6	310.0	309.9	310.0	309.8	308.3	308.3	308.2	308.6	308.7	307.8	308.2
63	***	***	1.766	309.8	309.2	309.6	309.5	309.7	309.4	308.1	308.1	307.9	308.2	308.4	307.5	308.0
68	***	***	1.764	309.4	308.8	309.3	309.1	309.4	309.1	307.8	307.6	307.5	307.8	308.1	307.0	307.6
73	***	***	1.750	309.1	308.5	308.9	308.8	309.1	308.8	307.4	307.2	307.2	307.5	307.9	306.6	307.4
78	***	***	1.749	308.9	308.2	308.7	308.5	308.8	308.8	306.9	306.8	306.9	307.0	307.5	306.5	306.8
83	***	***	1.764	308.8	308.1	308.5	308.4	308.8	308.7	306.7	306.7	306.8	307.0	307.1	306.4	306.6
88	***	***	1.743	308.7	308.0	308.4	308.2	308.7	308.5	306.6	306.7	306.9	307.0	307.1	306.3	306.6
93	***	***	1.739	308.5	308.0	308.4	308.1	308.6	308.4	306.6	306.6	306.6	306.9	307.0	306.2	306.5
103	***	***	1.747	308.2	307.8	308.2	308.0	308.4	308.2	306.3	306.4	306.4	306.7	306.7	306.5	306.3
113	***	***	1.751	308.0	307.6	308.0	307.6	308.1	308.0	306.1	306.2	306.1	306.6	306.4	305.9	306.1
123	***	***	1.769	307.9	307.5	307.9	307.5	308.0	307.9	305.9	305.9	305.9	306.6	306.2	305.9	305.9
133	***	***	1.736	307.7	307.3	307.8	307.4	307.9	307.8	305.9	305.9	305.8	306.4	306.1	305.7	305.9
143	***	***	1.771	307.6	307.3	307.8	307.3	308.0	307.8	305.8	305.8	305.6	306.3	305.9	305.6	305.7
153	***	***	1.752	307.6	307.2	307.6	307.1	308.0	307.7	305.5	305.6	305.5	306.2	305.9	305.6	305.5
163	***	***	1.747	307.5	307.1	307.6	307.1	308.0	307.6	305.5	305.6	305.4	306.1	305.7	305.5	305.5
173	***	***	1.767	307.5	307.0	307.6	307.0	307.6	307.6	305.3	305.5	305.3	306.1	305.6	305.4	305.4
183	***	***	1.734	307.4	307.0	307.5	306.9	307.5	307.6	305.3	305.5	305.2	306.0	305.5	305.3	305.4
193	***	***	1.758	307.3	307.0	307.5	306.9	307.4	307.6	305.2	305.4	305.1	306.0	305.4	305.3	305.3
203	***	***	1.749	307.3	307.0	307.5	306.8	307.5	307.5	305.2	305.3	305.2	306.0	305.4	305.3	305.2
213	***	***	1.750	307.3	306.9	307.4	306.8	307.5	307.5	305.2	305.3	305.2	305.9	305.3	305.3	305.3
223	***	***	1.752	307.2	306.9	307.3	306.8	307.5	307.3	305.2	305.4	305.1	305.9	305.3	305.2	305.3
233	***	***	1.765	307.1	306.9	307.4	306.8	307.4	307.4	305.2	305.2	305.2	306.0	305.2	305.2	305.2
243	***	***	1.762	307.1	306.8	307.3	306.8	307.5	307.3	305.1	305.2	305.0	305.9	305.3	305.2	305.1
253	***	***	1.757	307.1	306.8	307.2	306.7	307.4	307.3	305.0	305.2	305.0	305.9	305.2	305.1	305.2
263	***	***	1.729	307.1	306.8	307.1	306.6	307.3	307.3	305.0	305.2	305.1	305.9	305.3	305.1	305.2
273	***	***	1.751	307.0	306.8	307.3	306.6	307.2	307.3	305.0	305.1	305.2	305.8	305.2	305.3	305.1
283	***	***	1.746	307.0	306.8	307.1	306.6	307.1	307.3	304.9	305.2	305.2	305.9	305.2	305.2	305.1
293	***	***	1.748	307.0	306.7	307.1	306.6	307.1	307.2	304.9	305.1	305.2	305.8	305.1	305.2	305.0
303	***	***	1.751	307.0	306.7	307.1	306.6	307.0	307.1	304.9	305.0	305.2	305.8	305.1	305.1	305.0
313	***	***	1.765	307.0	306.7	307.0	306.6	307.0	307.1	305.0	305.0	305.1	305.8	305.1	305.0	305.0

Table 10D — Scaling Run 203, Test Configuration 1: One 1.52 cm Nozzle

5 C METER CHAMBER OBSTRUCTED GAS MIXING RUN 203

TIME (SEC)	PRESSURANT FOW - TOTAL, P (BAR)	T (DEG K)	FILL-TANK P (BAR)	THERMOCOUPLES LOCATION I T(DEG K) 1	2	3	4	5	6	7	8	9	10	11	12	13
-5	***	***	1.057	305.3	305.1	305.1	305.2	304.8	305.2	303.4	303.5	303.3	304.1	303.8	303.4	304.8
-4	***	***	1.052	305.3	305.2	305.1	305.2	304.9	305.2	303.4	303.6	303.3	304.1	303.8	303.4	303.5
-3	***	***	1.047	305.3	305.2	305.1	305.2	304.8	305.2	303.5	303.6	303.3	304.1	303.8	303.3	303.5
-2	***	***	1.046	305.3	305.2	305.1	305.2	304.8	305.2	303.5	303.6	303.3	304.1	303.8	303.4	303.5
-1	***	***	1.045	305.3	305.2	305.1	305.2	304.8	305.2	303.5	303.6	303.3	304.1	303.8	303.3	303.5
0	6.423	296.6	1.046	305.3	305.2	305.1	305.2	304.8	305.2	303.4	303.5	303.3	304.1	303.8	303.3	303.5
1	6.366	306.7	1.055	305.8	305.3	305.1	305.2	305.5	305.9	303.7	304.3	303.9	304.8	304.2	303.7	303.8
2	6.219	303.8	1.074	307.6	307.5	305.8	307.5	306.6	308.1	305.3	306.6	305.8	306.6	306.2	305.7	305.4
3	6.083	295.5	1.114	308.8	308.8	306.8	308.9	308.1	309.3	307.5	309.0	307.5	308.5	308.3	308.0	307.8
4	5.956	292.7	1.158	310.5	310.5	308.7	310.7	309.7	310.8	309.1	310.2	309.0	309.6	309.5	309.7	309.4
5	5.880	291.3	1.152	311.5	311.6	310.2	311.6	310.9	311.9	310.2	311.1	309.5	310.3	310.4	310.4	310.2
6	5.776	290.9	1.205	312.2	312.1	311.0	312.2	311.6	312.3	310.8	311.5	310.5	311.1	311.2	311.1	310.9
7	5.633	290.4	1.232	312.7	312.8	312.0	313.0	312.0	313.1	311.5	312.1	311.1	311.6	311.7	311.7	311.6
8	5.527	290.0	1.255	313.3	313.4	312.7	313.4	312.4	313.5	311.9	312.4	311.5	312.0	312.2	312.2	312.0
9	5.427	289.8	1.280	313.5	313.5	313.2	313.8	312.6	313.6	312.2	312.6	311.8	312.3	312.3	312.4	312.3
10	5.337	289.4	1.309	313.8	313.8	313.5	313.9	312.9	313.7	312.2	312.6	312.0	312.6	312.3	312.4	312.3
11	5.243	289.0	1.312	313.8	313.8	313.8	314.1	312.7	313.8	312.4	312.7	312.3	312.7	312.8	312.7	312.6
12	5.143	288.8	1.344	313.9	314.0	313.8	314.1	312.6	313.9	312.5	312.8	312.3	312.9	312.9	312.6	312.8
13	5.042	288.4	1.376	314.0	314.1	314.2	314.2	312.9	313.9	312.6	312.9	312.4	313.0	312.9	312.7	312.7
14	4.959	288.1	1.374	314.0	314.1	314.2	314.2	312.6	313.8	312.4	312.8	312.3	312.9	312.9	312.6	312.8
15	4.858	287.8	1.421	314.0	314.1	314.1	314.1	312.8	313.8	312.7	312.6	312.5	313.0	312.9	312.6	312.7
16	4.774	287.6	1.434	313.9	314.1	314.2	314.1	312.4	313.8	312.6	312.6	312.4	312.8	312.8	312.5	312.6
17	4.706	287.3	1.455	313.9	314.1	314.2	314.1	312.7	313.8	312.4	312.5	312.4	312.9	312.8	312.4	312.6
18	4.629	286.9	1.467	313.8	313.9	314.2	314.0	312.3	313.8	312.4	312.5	312.4	312.8	312.8	313.0	312.6
19	4.544	286.7	1.491	313.8	313.8	314.0	313.8	312.3	313.7	312.4	312.6	312.3	312.8	312.7	312.4	312.6
20	4.462	286.6	1.520	313.8	313.8	314.0	313.9	312.4	313.6	312.3	312.4	312.3	312.7	312.6	312.4	312.4
21	4.399	286.5	1.519	313.7	313.8	313.9	313.8	312.4	313.5	312.3	312.3	312.2	312.5	312.6	312.3	312.4
22	4.337	286.2	1.569	313.6	313.7	313.8	313.8	312.2	313.4	312.3	312.3	312.2	312.6	312.5	312.2	312.3
23	4.267	286.0	1.567	313.6	313.8	313.8	313.8	312.3	313.4	312.3	312.2	312.2	312.5	312.4	312.2	312.3
24	4.190	285.5	1.594	313.5	313.6	313.8	313.7	312.2	313.3	312.2	312.1	312.0	312.6	312.4	312.2	312.3
25	4.126	285.6	1.616	313.4	313.6	313.7	313.7	312.3	313.3	312.1	312.2	312.0	312.4	312.3	312.1	312.2
26	4.060	285.2	1.612	313.4	313.5	313.6	313.6	312.1	313.2	312.1	312.2	311.9	312.3	312.3	312.0	312.2
27	3.989	285.2	1.649	313.3	313.4	313.6	313.5	311.9	313.3	312.1	312.0	312.1	312.3	312.3	312.1	312.2
28	3.931	285.2	1.642	313.3	313.4	313.6	313.4	311.7	313.1	312.0	312.0	311.7	312.2	312.2	311.8	312.1
29	3.884	284.8	1.681	313.2	313.3	313.5	313.4	311.8	313.0	312.0	311.9	311.9	312.2	312.2	311.9	312.0
30	3.827	284.5	1.693	313.2	313.3	313.4	313.4	312.0	313.1	311.9	311.8	311.7	312.3	312.2	311.8	311.9
31	3.765	284.4	1.728	313.1	313.3	313.4	313.3	311.9	313.1	311.9	311.7	311.6	312.2	312.0	311.7	311.9
32	3.710	284.3	1.728	313.1	313.3	313.4	313.3	311.9	312.9	311.7	311.8	311.6	312.1	312.0	311.7	311.8
33	3.654	294.1	1.736	313.1	313.3	313.3	313.2	311.6	312.9	311.7	311.7	311.5	312.1	311.9	311.6	311.7
34	3.617	293.9	1.760	313.1	313.2	313.3	313.2	311.9	312.8	311.6	311.6	311.6	311.9	311.9	311.6	311.6
35	3.581	291.9	1.769	312.9	312.9	313.1	313.1	311.1	312.8	312.0	311.5	311.5	311.9	311.8	311.5	311.7
36	***	***	1.783	312.8	312.9	313.1	312.9	311.6	312.6	311.4	311.1	311.2	311.7	311.5	311.1	311.3
37	***	***	1.772	312.5	312.5	312.9	312.6	311.6	312.3	311.1	311.0	311.0	311.5	311.3	311.0	311.0
38	***	***	1.754	312.3	312.2	312.7	312.3	311.6	312.1	310.8	310.9	310.7	311.1	311.0	310.6	310.8
39	***	***	1.780	312.0	312.0	312.5	312.0	311.5	311.8	312.0	310.6	310.6	311.0	310.9	310.5	310.7

COORDINATES

I	R (M)	THETA (DEG)	Z (M)
1	0.229	00	0.152
2	0.229	00	0.000
3	0.076	00	0.152
4	0.102	00	0.076
5	0.076	00	-0.076
6	0.152	00	0.152
7	0.229	00	0.762
8	0.229	00	0.991
9	0.076	00	0.076
10	0.229	00	-0.076
11	0.152	00	0.762
12	0.229	00	0.914
13	0.229	00	0.838

(Table continues)

UNCLASSIFIED

Table 10D — Scaling Run 203, Test Configuration 1: One 1.52 cm Nozzle (Continued)

5 C METER CHAMBER OBSTRUCTED GAS MIXING RUN 107

TIME (SEC)	PRESSURANT FOW - TOTAL P (BAR)	T (DEG K)	FILL-TANK P (BAR)	THERMOCOUPLES LOCATION I T(DEG K) 1	2	3	4	5	6	7	8	9	10	11	12	13
40	***	***	1.765	311.9	311.8	312.3	312.0	311.4	311.6	310.4	310.5	310.3	310.8	312.5	310.3	310.5
41	***	***	1.768	311.7	311.6	312.1	311.7	311.3	311.5	310.4	310.3	310.2	310.6	310.5	310.2	310.3
42	***	***	1.763	311.6	311.6	312.0	311.7	311.2	311.5	310.8	310.2	310.0	311.6	310.4	311.5	310.2
43	***	***	1.747	311.6	311.4	311.8	311.6	311.2	311.4	310.0	310.2	309.8	310.2	310.3	310.0	310.2
48	***	***	1.752	311.0	310.7	311.1	310.9	310.8	310.8	311.6	309.5	309.1	309.6	309.7	309.1	309.5
53	***	***	1.752	310.7	310.2	310.7	310.6	310.4	310.4	308.8	308.9	308.8	309.2	309.3	308.5	308.8
58	***	***	1.776	310.2	309.9	310.2	310.2	310.2	310.0	308.5	308.4	308.3	308.8	308.8	307.9	308.5
63	***	***	1.777	309.9	309.6	309.8	309.9	310.0	309.7	308.2	308.1	308.1	308.5	308.5	308.2	308.1
68	***	***	1.763	309.7	309.3	309.5	309.5	309.5	309.4	307.9	307.6	307.8	308.1	308.3	307.1	307.6
73	***	***	1.752	309.4	308.9	309.3	309.3	309.3	309.2	307.5	307.5	310.7	307.8	308.0	306.8	307.5
78	***	***	1.742	309.2	308.7	309.0	308.9	309.1	309.0	307.1	307.1	307.0	307.6	307.7	306.6	307.1
83	***	***	1.762	309.0	308.5	308.8	308.8	309.0	308.8	307.1	306.8	306.9	307.4	307.5	306.6	306.8
88	***	***	1.767	308.9	308.4	308.8	308.7	308.9	308.8	306.8	306.8	306.6	307.4	307.3	306.4	306.7
93	***	***	1.739	308.8	308.2	308.7	308.5	308.8	308.7	306.6	306.8	306.6	307.2	307.1	306.3	306.6
103	***	***	1.776	308.5	308.1	308.5	308.2	308.5	308.4	306.6	306.6	306.7	308.4	307.7	306.3	306.5
113	***	***	1.777	308.3	308.0	308.2	308.0	308.3	308.2	306.4	306.5	306.2	306.8	307.1	306.2	306.3
123	***	***	1.741	308.1	307.8	308.1	307.9	308.2	308.1	306.1	306.3	306.1	306.6	306.6	306.1	306.2
133	***	***	1.745	308.0	307.6	308.1	307.6	308.1	308.1	305.9	306.1	305.9	306.6	306.3	305.9	305.9
143	***	***	1.757	308.0	307.6	308.0	307.6	308.1	308.1	305.8	305.9	305.8	306.5	306.1	305.8	305.9
153	***	***	1.769	307.9	307.5	308.0	307.5	308.2	308.0	305.8	305.9	305.6	306.5	305.9	305.8	305.8
163	***	***	1.743	307.8	307.5	307.8	307.4	308.2	308.0	305.6	305.8	305.5	306.4	305.9	305.7	305.7
173	***	***	1.768	307.8	307.4	307.9	307.3	308.2	308.0	305.7	305.7	305.5	306.4	305.7	305.8	305.8
183	***	***	1.744	307.7	307.3	307.8	307.2	307.9	308.0	305.5	305.7	305.4	306.2	305.7	305.6	305.5
193	***	***	1.765	307.6	307.3	307.8	307.1	307.6	307.8	305.4	305.6	305.3	306.3	305.7	305.5	305.5
203	***	***	1.735	307.6	307.2	307.6	307.1	307.6	307.8	305.3	305.5	305.3	306.3	305.7	305.5	305.5
213	***	***	1.752	307.6	307.3	307.6	307.0	307.6	307.8	305.3	305.5	305.4	306.2	305.5	305.5	305.5
223	***	***	1.763	307.6	307.1	307.6	307.0	307.7	307.8	305.3	305.5	305.2	306.2	305.5	305.5	305.4
233	***	***	1.745	307.5	307.1	307.6	307.0	307.6	307.7	305.2	305.4	305.3	306.1	305.5	305.4	305.3
243	***	***	1.773	307.5	307.2	307.7	307.0	307.7	307.7	305.3	305.3	305.3	306.2	305.4	305.4	305.3
253	***	***	1.773	307.5	307.1	307.6	307.0	307.5	307.6	306.2	305.3	305.3	306.2	305.4	305.3	305.3
263	***	***	1.743	307.5	307.1	307.6	307.0	307.3	307.6	305.2	305.4	305.3	306.2	305.4	305.3	305.3
273	***	***	1.733	307.4	307.1	307.6	307.0	307.4	307.6	305.2	305.3	305.2	306.1	305.4	305.3	305.4
283	***	***	1.773	307.3	307.1	307.5	306.9	307.4	307.6	305.2	305.2	305.2	306.1	305.2	305.3	305.2
293	***	***	1.733	307.3	307.1	307.6	306.9	307.4	307.6	305.2	305.3	305.2	306.1	305.4	305.2	305.4
303	***	***	1.760	307.4	307.0	307.5	306.9	307.5	307.6	305.2	305.2	305.2	306.0	305.3	305.3	305.2
313	***	***	1.741	307.3	307.0	307.4	306.9	307.5	307.5	305.1	305.2	305.2	305.9	305.3	305.2	305.2
323	***	***	1.760	307.2	307.0	307.4	306.8	307.4	307.5	305.1	305.2	305.2	306.0	305.2	305.2	305.2
333	***	***	1.757	307.2	307.0	307.4	306.8	307.3	307.3	305.1	305.2	305.2	305.9	305.2	305.2	305.2

Table 10E — Scaling Run 204, Test Configuration 1: One 1.52 cm Nozzle

5 C METER CHAMBER OBSTRUCTED GAS MIXING RUN 204

TIME (SEC)	PRESSURANT FOW - TOTAL P (BAR)	PRESSURANT FOW - TOTAL T (DEG K)	FILL-TANK P (BAR)	THERMOCOUPLES LOCATION I T(DEG K) 1	2	3	4	5	6	7	8	9	10	11	12	13
-5	***	***	1.065	304.9	304.8	304.9	304.8	304.4	304.8	303.3	303.5	303.1	303.9	303.5	303.1	303.2
-4	***	***	1.039	304.9	304.8	304.9	304.8	304.5	304.8	303.3	303.5	303.1	303.9	303.5	303.1	303.3
-3	***	***	1.061	304.9	304.8	304.9	304.8	304.4	304.8	303.3	303.5	303.1	303.9	303.5	303.1	303.3
-2	***	***	1.053	304.9	304.7	304.8	304.8	304.4	304.8	303.2	303.5	303.1	303.8	303.5	303.1	303.3
-1	***	***	1.034	304.9	304.7	304.8	304.8	304.4	304.8	303.3	303.5	303.1	303.9	303.5	303.1	303.4
0	6.391	296.2	1.065	304.9	304.7	304.8	304.8	304.4	304.8	303.3	305.1	303.1	303.9	303.5	303.1	303.2
1	6.409	296.2	1.045	304.9	304.7	304.8	304.8	304.4	304.8	303.3	303.4	303.1	303.9	303.6	303.1	303.3
2	6.310	309.1	1.062	305.4	304.9	304.8	305.0	305.1	305.5	303.9	304.9	304.0	305.3	304.5	304.0	304.2
3	6.142	298.4	1.122	307.9	307.6	306.1	307.7	307.0	308.1	306.1	307.5	306.2	307.1	306.8	306.6	306.2
4	6.074	292.2	1.122	309.7	309.4	307.6	309.5	308.9	310.0	307.3	308.8	307.6	308.1	308.1	307.6	307.4
5	5.943	291.0	1.153	310.5	310.4	308.8	310.5	309.8	310.9	308.9	310.0	308.8	309.4	311.8	309.2	309.0
6	5.832	290.6	1.179	311.1	311.3	309.9	311.1	310.4	311.6	309.9	311.1	309.9	310.3	310.4	310.4	310.2
7	5.747	289.8	1.215	312.0	312.0	311.3	312.0	311.4	312.1	310.8	311.7	310.7	311.1	311.2	311.2	310.9
8	5.584	289.3	1.243	312.4	312.6	312.1	312.7	311.7	312.6	311.4	312.2	311.1	311.6	311.7	311.6	311.6
9	5.526	289.1	1.255	312.9	312.9	312.5	313.1	312.2	312.9	311.6	312.3	311.6	311.9	312.0	311.9	311.7
10	5.404	288.7	1.281	313.2	313.4	313.2	313.5	312.4	313.2	312.1	312.5	311.9	312.2	312.4	312.2	312.1
11	5.310	288.2	1.306	313.3	313.6	313.6	313.6	312.4	313.3	312.2	312.7	312.1	312.3	312.4	312.2	312.2
12	5.198	288.1	1.326	313.6	313.6	313.7	313.8	312.3	313.4	312.3	312.6	312.2	312.6	312.5	312.3	312.4
13	5.111	287.7	1.351	313.6	313.7	313.8	313.8	312.6	313.4	312.3	312.7	312.3	312.7	312.4	312.4	312.5
14	5.003	287.2	1.383	313.5	313.7	313.8	313.8	312.3	313.4	312.3	312.5	312.3	312.8	312.5	312.3	312.4
15	4.931	287.2	1.390	313.6	313.8	314.0	313.8	312.3	313.4	312.3	312.5	312.3	312.7	312.6	312.3	312.6
16	4.850	286.8	1.434	313.6	313.8	314.0	313.8	312.3	313.4	312.6	312.4	312.3	312.8	312.5	312.3	312.4
17	4.773	286.5	1.428	313.4	313.7	313.9	313.8	312.1	313.3	312.3	312.5	312.3	312.6	312.5	312.3	312.4
18	4.671	286.4	1.471	313.4	313.7	313.8	313.7	312.0	313.2	312.3	312.3	312.2	312.6	312.3	312.2	312.3
19	4.602	286.1	1.473	313.3	313.6	313.9	313.6	312.2	313.2	312.3	312.4	312.2	312.5	312.4	312.2	312.4
20	4.514	285.9	1.507	313.3	313.5	313.8	313.7	312.0	313.1	312.2	312.3	312.2	312.6	312.4	312.2	312.4
21	4.486	285.5	1.505	313.3	313.4	313.8	313.5	312.0	313.2	312.2	312.3	312.1	312.4	312.4	312.1	312.2
22	4.393	285.2	1.546	313.2	313.4	313.8	313.5	311.8	312.9	312.2	312.3	312.1	312.4	312.3	312.1	312.2
23	4.335	285.2	1.546	313.2	313.3	313.7	313.4	311.9	312.9	312.1	312.3	312.0	312.4	312.3	312.0	312.1
24	4.242	284.6	1.580	313.0	313.2	313.6	313.3	311.9	312.8	312.0	312.1	312.0	312.4	312.3	312.0	312.1
25	4.176	284.6	1.600	313.1	313.2	313.6	313.3	311.7	312.8	311.9	312.1	311.9	312.2	312.2	311.9	312.0
26	4.103	284.5	1.619	312.9	313.1	313.5	313.3	311.7	312.8	312.0	312.0	311.9	312.3	312.2	311.8	312.0
27	4.050	284.4	1.622	312.8	313.1	313.3	313.2	311.7	312.7	311.8	312.0	311.8	312.2	312.2	311.9	311.9
28	3.994	284.2	1.668	312.8	312.9	313.4	313.1	311.7	312.7	311.9	312.0	311.7	312.0	312.0	311.7	311.9
29	3.934	284.1	1.656	312.8	313.0	313.4	313.1	311.7	312.6	311.8	312.0	311.7	312.0	312.1	311.7	311.9
30	3.858	284.0	1.695	312.7	312.9	313.3	312.9	311.6	312.6	311.6	311.9	311.6	312.0	312.0	311.6	311.7
31	3.812	283.8	1.697	312.7	312.8	313.3	312.9	311.6	312.4	311.6	311.9	311.7	311.9	312.0	311.6	311.8
32	3.746	283.5	1.721	312.6	312.8	313.2	312.9	311.5	312.6	311.6	311.8	311.6	311.9	311.9	311.6	311.6
33	3.728	283.3	1.721	312.6	312.7	313.2	312.8	311.4	312.5	311.6	311.8	311.5	311.9	311.9	311.6	311.6
34	3.656	293.2	1.757	312.5	312.6	313.2	312.8	311.6	312.4	311.7	311.7	311.6	311.8	311.9	311.6	311.6
35	3.610	293.2	1.759	312.4	312.6	313.1	312.7	311.5	312.4	311.5	311.7	311.5	311.7	311.7	311.5	311.5
36	3.586	288.4	1.765	312.4	312.5	313.0	312.5	311.2	312.3	311.4	311.5	311.2	311.7	311.6	311.3	311.4
37	***	***	1.789	312.2	312.2	312.8	312.3	311.5	312.0	311.1	311.0	311.0	311.3	311.3	311.0	311.1
38	***	***	1.762	312.0	312.0	312.7	312.1	311.3	311.7	310.8	310.9	310.9	311.1	311.1	310.6	310.9
39	***	***	1.775	311.7	311.7	312.4	311.8	311.2	311.6	310.4	310.6	310.7	310.9	310.8	310.5	310.6

COORDINATES

I	R (M)	THETA (DEG)	Z (M)
1	0.229	00	0.152
2	0.229	00	0.000
3	0.076	00	0.152
4	0.102	00	0.076
5	0.076	00	-0.076
6	0.152	00	0.152
7	0.229	00	0.762
8	0.229	00	0.991
9	0.076	00	0.076
10	0.229	00	-0.076
11	0.152	00	0.762
12	0.229	00	0.914
13	0.229	00	0.838

(Table continues)

UNCLASSIFIED

Table 10E — Scaling Run 204, Test Configuration 1: One 1.52 cm Nozzle (Continued)

5 C METER CHAMBER OBSTRUCTED GAS MIXING RUN 107

TIME (SEC)	PRESSURANT FOW - TOTAL P (BAR)	T (DEG K)	FILL-TANK P (BAR)	THERMOCOUPLES LOCATION T T(DEG K) 1	2	3	4	5	6	7	8	9	10	11	12	13
40	***	***	1.756	311.6	311.5	312.2	311.5	311.0	311.3	310.2	310.5	310.6	310.7	310.7	310.2	310.3
41	***	***	1.765	311.3	311.2	312.0	311.3	310.9	311.1	310.3	310.4	310.3	310.5	310.8	310.2	310.3
42	***	***	1.777	311.1	311.1	311.8	311.3	310.9	311.0	310.2	310.2	310.2	310.2	310.4	309.9	310.2
43	***	***	1.765	311.0	311.0	311.6	311.1	310.7	310.9	310.0	310.3	310.1	310.1	310.3	309.8	310.0
44	***	***	1.749	311.0	310.8	311.5	311.0	310.7	310.8	309.7	310.2	309.8	310.0	310.1	309.5	309.9
49	***	***	1.773	310.5	310.2	310.8	310.4	310.3	310.2	309.3	309.5	309.1	309.3	309.5	308.8	309.3
54	***	***	1.781	310.0	309.6	310.2	309.9	310.0	309.7	308.8	308.9	308.7	308.8	309.0	308.1	308.6
59	***	***	1.762	309.5	309.1	309.8	309.5	309.5	309.3	308.1	308.4	308.1	308.2	308.5	307.6	308.2
64	***	***	1.767	309.3	308.7	309.5	309.2	309.4	309.1	307.7	308.1	307.7	307.9	308.1	307.3	308.0
69	***	***	1.776	309.1	308.5	309.3	308.9	309.1	308.9	307.3	307.6	307.3	307.7	307.9	306.9	307.3
74	***	***	1.764	308.9	308.3	309.1	308.8	308.8	308.7	307.0	307.5	307.1	307.5	307.4	306.6	307.0
79	***	***	1.760	308.7	308.1	308.8	308.4	308.7	308.4	306.7	306.9	306.9	307.2	307.3	306.5	306.9
84	***	***	1.758	308.5	308.0	308.6	308.2	308.6	308.3	306.6	306.6	306.6	307.0	307.0	306.4	306.6
89	***	***	1.761	308.3	307.9	308.4	308.1	308.5	308.1	306.6	306.6	306.6	306.9	307.0	306.2	306.6
94	***	***	1.760	308.2	307.7	308.4	308.0	308.3	308.2	306.4	306.6	306.6	306.8	306.7	306.2	306.4
104	***	***	1.773	308.1	307.6	308.2	307.8	308.2	308.0	306.2	306.4	306.2	306.6	306.6	306.2	306.2
114	***	***	1.747	307.8	307.4	308.0	307.5	308.0	307.8	306.0	306.2	306.1	306.4	306.4	305.9	306.0
124	***	***	1.761	307.6	307.3	308.0	307.4	307.8	307.6	305.9	306.1	305.9	306.4	306.2	305.8	305.9
134	***	***	1.761	307.5	307.2	307.8	307.3	307.6	307.6	305.7	305.9	305.9	306.4	306.0	305.8	305.9
144	***	***	1.740	307.4	307.1	307.8	307.1	307.6	307.4	305.6	305.9	305.6	306.2	305.9	305.6	305.8
154	***	***	1.762	307.3	307.0	307.7	307.0	307.6	307.4	305.5	305.8	305.6	306.2	305.9	305.5	305.5
164	***	***	1.761	307.3	306.9	307.6	306.9	307.8	307.3	305.3	305.7	305.4	306.1	305.6	305.5	305.4
174	***	***	1.764	307.3	306.9	307.6	306.9	307.7	307.3	305.3	305.5	305.3	306.1	305.5	305.4	305.4
184	***	***	1.764	307.1	306.9	307.6	306.8	307.5	307.3	305.2	305.5	305.3	306.1	305.5	305.4	305.3
194	***	***	1.768	307.1	306.8	307.5	306.7	307.6	307.3	305.2	305.5	305.3	306.1	305.4	305.3	305.3
204	***	***	1.766	307.0	306.8	307.5	306.6	307.5	307.3	305.2	305.4	305.3	306.0	305.4	305.4	305.2
214	***	***	1.758	307.0	306.7	307.5	306.6	307.5	307.2	305.2	305.4	305.3	305.9	305.3	305.3	305.3
224	***	***	1.759	307.0	306.8	307.5	306.6	307.3	307.2	305.1	305.3	305.2	305.9	305.4	305.3	305.2
234	***	***	1.773	307.0	306.7	307.4	306.6	307.4	307.1	305.1	305.3	305.2	305.9	305.2	305.2	305.2

Table 10F — Scaling Run 205, Test Configuration 1: One 1.52 cm Nozzle

5 C METER CHAMBER OBSTRUCTED GAS MIXING RUN 205

TIME (SEC)	PRESSURANT FOW - TOTAL, P (BAR)	T (DEG K)	FILL-TANK P (BAR)	THERMOCOUPLES LOCATION I T(DEG K) 1	2	3	4	5	6	7	8	9	10	11	12	13
-5	***	***	1.041	304.1	304.0	304.2	304.0	303.6	304.0	302.4	302.6	302.3	303.1	302.7	302.5	303.6
-4	***	***	1.056	304.2	304.0	304.1	304.0	303.7	304.0	302.4	302.8	302.4	303.0	302.7	302.4	302.4
-3	***	***	1.039	304.2	304.0	304.1	304.0	303.7	304.0	302.4	302.6	302.3	303.0	302.7	302.4	302.5
-2	***	***	1.069	304.2	304.0	304.1	304.0	303.7	304.0	302.4	302.6	302.3	302.9	302.7	302.4	302.4
-1	***	***	1.047	304.1	304.0	304.1	304.0	303.8	304.0	302.5	302.6	302.4	303.0	302.7	302.4	302.5
0	6.378	295.1	1.056	304.1	303.9	304.0	304.0	303.8	304.0	302.4	303.1	302.3	302.9	302.6	302.4	302.4
1	6.365	295.1	1.052	304.1	303.9	304.0	304.0	303.8	304.0	302.4	302.8	302.5	303.2	302.7	302.5	302.4
2	6.236	311.8	1.076	304.8	304.3	304.0	304.4	304.5	305.0	303.5	304.8	304.0	304.9	304.5	304.1	303.8
3	6.153	296.7	1.095	307.3	307.2	305.4	307.4	306.4	307.5	305.1	306.5	305.4	306.0	305.9	305.6	305.3
4	6.007	291.2	1.128	309.0	309.1	307.1	309.1	308.2	309.5	307.1	308.4	307.1	307.7	307.6	307.5	307.2
5	5.897	290.2	1.160	310.0	310.0	308.4	310.1	309.3	310.2	308.5	309.7	308.5	308.8	308.9	308.9	308.7
6	5.767	289.4	1.184	311.0	310.8	309.8	310.9	310.3	311.2	309.4	310.5	309.5	309.8	310.0	309.9	309.5
7	5.651	288.8	1.200	311.6	311.8	310.8	311.7	311.0	311.9	310.2	310.9	310.2	310.6	310.6	310.4	310.2
8	5.574	288.7	1.245	312.0	312.1	311.5	312.2	311.2	312.3	310.5	311.4	310.6	310.9	310.9	310.9	310.7
9	5.461	288.2	1.256	312.3	312.4	312.2	312.5	311.7	312.3	311.3	311.6	311.0	311.4	311.4	311.3	311.1
10	5.363	288.0	1.272	312.4	312.8	312.6	312.8	311.7	312.6	311.2	311.7	311.3	311.6	311.6	311.5	311.5
11	5.245	287.5	1.320	312.7	312.9	312.8	312.9	311.7	312.8	311.5	312.0	311.6	311.8	311.8	311.7	311.6
12	5.159	287.3	1.325	312.7	313.1	313.1	313.1	311.7	312.7	311.5	312.0	311.6	312.0	311.7	311.6	311.6
13	5.049	286.9	1.363	312.8	313.1	313.2	313.1	311.8	312.7	311.7	311.8	311.6	312.0	311.9	311.6	311.7
14	4.965	286.7	1.375	312.8	312.9	313.2	313.1	311.6	312.7	311.7	312.0	311.6	311.9	311.8	311.7	311.7
15	4.883	286.4	1.411	312.8	313.1	313.3	313.1	311.8	312.7	311.6	311.9	311.6	311.9	311.9	311.7	311.7
16	4.804	286.0	1.409	312.8	312.9	313.3	313.1	311.6	312.6	311.7	311.8	311.6	311.9	311.9	311.7	311.8
17	4.707	285.9	1.443	312.8	312.9	313.2	313.0	311.7	312.6	311.7	311.7	311.6	311.9	311.9	311.7	311.7
18	4.632	285.5	1.462	312.7	312.9	313.2	313.0	311.5	312.6	311.6	311.7	311.6	311.9	311.8	311.6	311.6
19	4.554	285.1	1.465	312.7	312.8	313.1	312.9	311.5	312.4	311.6	311.7	312.0	311.7	311.7	311.6	311.7
20	4.491	285.1	1.518	312.6	312.7	313.1	312.9	311.2	312.6	311.6	311.7	311.5	311.7	311.7	311.6	311.6
21	4.507	284.8	1.509	312.6	312.8	313.0	312.9	311.3	312.3	311.6	311.6	311.5	311.7	311.7	311.5	311.6
22	4.331	284.5	1.556	312.4	312.7	313.0	312.8	311.1	312.4	311.5	311.6	311.5	311.6	311.7	311.4	311.6
23	4.268	284.3	1.549	312.4	312.6	313.0	312.7	311.1	312.3	311.4	311.6	311.4	311.6	311.6	311.4	311.5
24	4.185	284.3	1.584	312.3	312.4	312.9	312.6	311.1	312.2	311.3	311.3	311.3	311.6	311.6	311.2	311.3
25	4.129	284.1	1.589	312.3	312.4	312.9	312.5	311.2	312.2	311.3	311.4	311.2	311.4	311.6	311.2	311.4
26	4.044	283.8	1.634	312.3	312.3	312.8	312.5	311.3	312.2	311.1	311.3	311.2	311.4	311.5	311.1	311.2
27	4.012	283.7	1.613	312.3	312.3	312.7	312.5	310.9	312.2	311.2	311.3	311.1	311.4	311.5	311.2	311.3
28	3.940	283.4	1.653	312.2	312.3	312.7	312.4	311.0	312.3	311.0	311.2	311.1	311.4	311.4	311.0	311.1
29	3.890	283.2	1.652	312.2	312.3	312.6	312.4	311.0	312.0	310.9	311.2	311.0	311.3	311.3	310.9	311.1
30	3.818	283.1	1.690	312.0	312.2	312.5	312.3	311.0	312.0	310.9	311.1	311.0	311.2	311.3	310.9	311.0
31	3.759	283.0	1.714	312.1	312.2	312.5	312.3	310.8	312.0	311.0	311.0	310.9	311.1	311.2	310.9	311.0
32	3.716	282.8	1.711	312.1	312.2	312.4	312.3	310.9	311.9	310.9	311.0	310.9	311.1	311.2	310.9	311.0
33	3.663	283.0	1.734	312.0	312.2	312.4	312.2	311.1	311.9	310.9	311.0	310.9	311.1	311.1	310.9	310.9
34	3.617	292.6	1.732	311.9	312.1	312.4	312.2	310.9	311.9	310.7	310.9	310.7	311.0	311.0	310.7	310.9
35	3.563	292.6	1.763	311.9	312.0	312.3	312.1	310.8	311.7	310.8	310.8	310.8	311.0	311.1	310.7	310.9
36	3.551	283.7	1.781	311.7	311.8	312.3	312.0	310.4	311.6	310.6	310.2	310.5	310.7	310.8	310.2	310.6
37	***	***	1.764	311.6	311.5	312.1	311.6	310.6	311.4	312.2	310.2	310.2	310.4	310.5	310.1	310.3
38	***	***	1.766	311.3	311.1	311.9	311.3	310.6	311.1	309.9	310.0	309.9	310.2	310.2	309.7	310.0
39	***	***	1.770	311.1	311.0	311.7	311.1	310.5	310.9	309.6	309.8	309.7	310.0	310.0	309.6	309.8

COORDINATES

I	R (M)	THETA (DEG)	Z (M)
1	0.229	00	0.152
2	0.229	00	0.000
3	0.076	00	0.152
4	0.102	00	0.076
5	0.076	00	-0.076
6	0.152	00	0.152
7	0.229	00	0.762
8	0.229	00	0.991
9	0.076	00	0.076
10	0.229	00	-0.076
11	0.152	00	0.762
12	0.229	00	0.914
13	0.229	00	0.838

(Table continues)

UNCLASSIFIED

Table 10F — Scaling Run 205, Test Configuration 1: One 1.52 cm Nozzle (Continued)

5 C METER CHAMBER OBSTRUCTED GAS MIXING RUN 107

TIME (SEC)	PRESSURANT FOW - TOTAL P (BAR)	T (DEG K)	FILL-TANK P (BAR)	THERMOCOUPLES LOCATION I T(DEG K) 1	2	3	4	5	6	7	8	9	10	11	12	13
40	***	***	1.759	311.0	310.8	311.6	311.0	310.4	310.8	309.5	309.6	309.5	309.8	309.9	309.4	309.7
41	***	***	1.751	310.7	310.6	311.3	310.7	310.2	310.5	309.4	309.5	309.3	309.6	309.7	309.2	309.5
42	***	***	1.761	310.7	310.4	311.2	310.6	310.2	310.3	309.4	309.4	309.2	309.5	309.6	309.1	309.4
43	***	***	1.765	310.6	310.2	311.0	310.5	310.1	310.2	309.1	309.3	309.1	309.3	309.5	308.9	309.1
44	***	***	1.761	310.4	310.1	310.9	310.4	310.1	310.2	309.1	309.1	308.9	309.1	309.4	308.7	309.0
49	***	***	1.757	309.9	309.5	310.2	309.8	309.7	309.6	308.2	308.5	308.3	308.6	308.7	308.1	308.4
54	***	***	1.752	309.6	309.1	309.7	309.5	309.5	309.3	307.9	308.0	307.9	308.1	308.3	307.4	308.0
59	***	***	1.769	309.2	308.8	309.4	309.1	309.3	309.1	307.3	307.5	307.4	307.8	307.9	306.7	307.2
64	***	***	1.763	309.1	308.6	309.0	308.9	308.9	308.8	306.8	307.1	307.0	307.5	307.4	306.6	307.0
69	***	***	1.763	308.8	308.2	308.8	308.6	308.8	308.5	306.6	306.8	306.6	307.0	307.0	306.3	306.6
74	***	***	1.761	308.3	307.8	308.4	308.1	308.4	308.0	306.2	306.6	306.4	306.7	306.7	306.0	306.4
79	***	***	1.763	308.0	307.5	308.0	307.8	308.1	307.7	306.0	306.2	306.1	306.5	306.6	305.8	306.0
84	***	***	1.760	307.8	307.4	308.0	307.6	308.0	307.6	305.8	306.0	305.9	306.3	306.3	305.5	305.8
89	***	***	1.734	307.7	307.1	307.8	307.4	307.8	307.5	305.7	305.9	305.8	306.1	306.1	305.5	305.8
94	***	***	1.761	307.6	307.0	307.6	307.3	307.6	307.5	305.5	305.7	305.7	305.9	305.9	305.3	305.5
104	***	***	1.769	307.3	306.9	307.5	307.1	307.5	307.3	305.4	305.5	305.5	305.9	305.8	305.2	305.3
114	***	***	1.748	307.1	306.7	307.3	306.8	307.5	307.1	305.2	305.4	305.3	305.7	305.6	305.2	305.2
124	***	***	1.763	307.0	306.6	307.1	306.6	307.4	307.0	305.1	305.2	305.1	305.7	305.3	305.0	305.0
134	***	***	1.738	306.8	306.6	307.1	306.6	307.5	306.9	305.0	305.2	304.9	305.6	305.2	304.9	305.0
144	***	***	1.737	306.8	306.4	307.0	306.4	307.4	306.8	304.8	305.0	304.8	305.5	305.1	304.8	304.9
154	***	***	1.761	306.7	306.4	307.0	306.4	307.3	306.8	304.7	304.9	304.6	305.3	304.9	304.8	304.8
164	***	***	1.737	306.6	306.3	306.9	306.2	307.0	306.7	304.6	304.9	304.6	305.3	304.8	304.7	304.8
174	***	***	1.766	306.6	306.3	306.9	306.2	306.9	306.7	304.5	304.8	304.5	305.3	304.8	304.6	304.5
184	***	***	1.741	306.6	306.3	306.9	306.2	306.9	306.7	304.5	304.8	304.5	305.3	304.7	304.6	304.7
194	***	***	1.736	306.6	306.2	306.8	306.1	306.8	306.6	304.5	304.7	304.5	305.3	304.6	304.6	304.5
204	***	***	1.770	306.4	306.2	306.8	306.1	306.8	306.6	304.5	304.6	304.5	305.2	304.5	304.5	304.5
214	***	***	1.754	306.4	306.1	306.6	306.0	306.8	306.6	304.4	304.6	304.5	305.2	304.5	304.5	304.5
224	***	***	1.738	306.4	306.1	306.6	305.9	306.8	306.6	304.5	304.6	304.5	305.2	304.5	304.5	304.5
234	***	***	1.760	306.4	306.0	306.6	305.9	306.7	306.6	304.3	305.0	304.5	305.0	304.5	304.5	304.5
244	***	***	1.765	306.2	305.9	306.6	305.8	306.6	306.6	304.4	304.5	304.5	305.0	304.5	304.5	304.4
254	***	***	1.744	306.2	305.9	306.6	305.8	306.6	306.5	304.4	304.5	304.5	305.0	304.5	307.4	304.5
264	***	***	1.736	306.2	305.9	306.6	305.7	306.6	306.4	304.4	304.5	304.5	304.9	304.5	304.5	304.5
274	***	***	1.752	306.3	305.9	306.6	305.7	306.4	306.3	304.3	304.5	304.5	304.9	304.5	304.4	304.4
284	***	***	1.745	306.2	305.8	306.4	305.6	306.4	306.3	304.3	304.5	304.5	304.9	304.5	304.4	304.4
294	***	***	1.764	306.2	305.9	306.3	305.7	306.2	306.2	304.2	304.5	304.4	304.8	304.5	304.4	304.3
304	***	***	1.747	306.1	305.9	306.1	305.6	306.2	306.2	304.2	304.4	304.4	304.9	304.4	304.4	304.3

Table 10G — Scaling Run 206, Test Configuration 1: One 1.52 cm Nozzle

5 C METER CHAMBER OBSTRUCTED GAS MIXING RUN 206

TIME (SEC)	PRESSURANT FOW - TOTAL, P (BAR)	T (DEG K)	FILL-TANK P (BAR)	THERMOCOUPLES LOCATION I T(DEG K) 1	2	3	4	5	6	7	8	9	10	11	12	13
-5	***	***	1.050	303.3	303.1	303.4	303.2	302.9	303.3	302.0	301.8	301.5	302.2	302.1	302.0	301.8
-4	***	***	1.067	303.3	303.1	303.4	303.1	302.9	303.3	302.0	302.0	301.3	302.3	302.0	301.7	301.7
-3	***	***	1.042	303.3	303.1	303.3	303.1	302.9	303.2	302.0	301.9	301.5	302.3	302.0	301.8	302.0
-2	***	***	1.063	303.3	303.1	303.4	303.2	302.9	303.3	302.1	301.8	301.3	302.3	302.1	301.8	302.0
-1	***	***	1.040	303.3	303.1	303.4	303.2	302.9	303.3	302.1	301.9	301.6	302.4	301.9	301.8	302.0
0	6.309	294.2	1.082	303.3	303.1	303.3	303.1	302.9	303.2	302.0	301.7	301.5	302.3	302.3	301.7	301.9
1	6.377	305.5	1.030	303.9	303.5	303.4	303.5	303.4	303.9	302.2	304.4	301.2	300.6	301.0	302.1	302.2
2	6.237	297.3	1.087	305.9	305.8	304.3	305.7	305.0	306.1	302.9	304.6	303.5	304.3	304.0	303.5	303.4
3	6.069	292.2	1.123	307.3	307.0	305.5	307.3	306.6	307.8	305.7	307.0	305.1	306.3	306.1	305.9	305.8
4	5.960	290.2	1.147	308.3	308.4	306.7	308.4	307.8	308.7	307.0	308.4	306.8	307.6	307.7	307.6	307.3
5	5.822	289.0	1.178	309.8	309.5	308.3	309.8	309.0	310.0	308.4	309.5	308.0	308.5	308.8	308.5	310.7
6	5.753	288.4	1.196	310.6	310.4	309.7	310.6	309.9	310.8	309.0	309.8	308.8	309.5	309.3	309.4	309.1
7	5.632	288.1	1.216	311.1	311.1	310.4	311.4	310.2	311.3	309.7	310.3	309.4	310.0	310.0	309.9	309.9
8	5.535	287.5	1.242	311.4	311.6	311.1	311.7	310.8	311.6	310.0	310.9	309.9	310.4	310.5	310.3	310.4
9	5.401	287.1	1.273	311.7	311.9	311.7	312.0	310.9	311.9	310.6	311.0	310.2	310.8	310.8	310.9	310.7
10	5.291	286.8	1.316	311.9	312.0	312.0	312.0	310.9	311.9	310.8	311.1	310.8	310.9	310.8	310.9	310.9
11	5.245	286.6	1.299	312.1	312.1	312.3	312.3	311.2	311.9	310.9	311.4	310.8	310.9	311.0	310.9	311.3
12	5.138	286.2	1.338	312.0	312.3	312.3	312.3	311.0	312.0	311.6	311.4	310.9	311.1	311.3	311.0	311.0
13	5.019	285.9	1.375	312.2	312.3	312.4	312.3	311.1	312.0	311.3	311.3	310.9	310.9	311.1	311.1	311.1
14	4.937	285.7	1.384	312.2	312.3	312.5	312.4	311.0	312.1	311.1	311.1	310.9	311.2	311.0	312.4	311.1
15	4.838	285.2	1.420	312.1	312.3	312.6	312.3	311.1	312.0	311.1	311.1	310.7	310.9	311.2	311.1	311.0
16	4.751	285.0	1.429	312.0	312.2	312.6	312.3	311.1	312.0	311.4	310.9	310.8	312.8	311.2	310.8	311.0
17	4.688	284.9	1.446	312.0	312.3	312.7	312.3	311.0	312.0	310.9	310.9	310.7	311.1	311.0	310.5	311.0
18	4.608	284.5	1.486	312.0	312.3	312.6	312.3	310.8	311.9	310.9	310.9	310.7	312.4	311.5	310.9	311.0
19	4.527	284.2	1.479	311.9	312.2	312.5	312.2	310.6	311.9	311.1	310.8	310.8	311.0	311.1	310.9	311.0
20	4.445	284.1	1.520	311.9	312.2	312.4	312.2	310.7	311.8	310.9	310.7	310.9	311.2	311.0	311.1	310.9
21	4.380	283.9	1.521	311.9	312.2	312.4	312.2	310.6	311.6	310.9	310.6	310.7	311.0	311.0	310.7	311.0
22	4.301	283.7	1.530	311.7	312.0	312.3	312.1	310.4	311.6	311.4	310.9	310.3	311.1	311.0	310.8	310.9
23	4.242	283.5	1.567	311.7	312.0	312.3	312.1	310.6	311.5	310.8	310.3	310.9	310.7	310.9	310.4	310.6
24	4.209	283.3	1.574	311.7	311.9	312.2	311.9	310.4	311.5	310.5	310.6	310.5	310.5	310.8	310.3	310.6
25	4.097	283.1	1.616	311.6	311.7	312.2	311.9	310.3	311.6	310.6	310.4	310.3	310.8	310.7	310.4	310.6
26	4.034	283.0	1.618	311.6	311.9	312.2	311.9	310.3	311.5	310.5	310.4	310.4	311.0	310.6	310.4	310.6
27	3.988	282.8	1.629	311.6	311.7	312.0	311.8	310.4	311.5	310.3	310.4	310.2	310.6	310.6	310.3	310.4
28	3.909	282.4	1.655	311.6	311.6	312.0	311.7	310.1	311.3	310.5	310.2	310.2	310.5	310.5	310.2	310.7
29	3.845	282.7	1.677	311.5	311.6	312.0	311.7	310.2	311.3	310.3	310.7	310.2	310.5	310.7	310.2	310.4
30	3.804	282.4	1.686	311.5	311.6	311.9	311.7	310.2	311.3	310.4	310.2	310.2	311.2	310.9	310.7	310.4
31	3.737	281.9	1.710	311.3	311.6	311.9	311.6	310.2	311.3	310.7	310.2	310.3	310.5	310.5	310.2	310.1
32	3.684	281.9	1.717	311.4	311.5	311.8	311.6	310.2	311.2	310.2	310.3	310.2	310.6	310.2	310.2	310.1
33	3.638	291.8	1.738	311.3	311.5	311.7	311.6	310.3	311.2	310.2	310.5	309.8	310.4	310.4	309.9	310.0
34	3.591	291.6	1.774	311.2	311.5	311.7	311.6	310.2	311.1	310.9	310.7	311.0	310.8	310.2	310.9	311.3
35	3.497	291.0	1.749	311.2	311.3	311.7	311.5	310.0	311.1	310.3	310.7	309.5	309.6	310.7	310.0	310.9
36	***	***	1.763	311.1	311.1	311.6	311.2	310.0	310.9	310.0	310.1	309.3	309.9	309.7	309.5	310.0
37	***	***	1.782	310.8	310.7	311.4	310.8	310.0	310.6	309.6	309.6	309.4	309.6	309.7	309.3	309.4
38	***	***	1.767	310.5	310.4	311.3	310.4	309.8	310.3	309.5	309.3	309.4	309.4	309.5	309.2	309.4
39	***	***	1.748	310.3	310.2	311.0	310.3	309.8	310.1	309.5	309.3	308.9	309.2	309.7	309.1	309.3

COORDINATES

I	R (M)	THETA (DEG)	Z (M)
1	0.229	00	0.152
2	0.229	00	0.000
3	0.076	00	0.152
4	0.102	00	0.076
5	0.076	00	-0.076
6	0.152	00	0.152
7	0.229	00	0.762
8	0.229	00	0.991
9	0.076	00	0.076
10	0.229	00	-0.076
11	0.152	00	0.762
12	0.229	00	0.914
13	0.229	00	0.838

(Table continues)

Table 10G — Scaling Run 206, Test Configuration 1: One 1.52 cm Nozzle (Continued)

5 C METER CHAMBER OBSTRUCTED GAS MIXING RUN 107

TIME (SEC)	PRESSURANT FOW - TOTAL P (BAR)	PRESSURANT FOW - TOTAL T (DEG K)	FILL-TANK P (BAR)	THERMOCOUPLES LOCATION I T(DEG K) 1	2	3	4	5	6	7	8	9	10	11	12	13
40	***	***	1.778	310.0	310.0	310.8	310.1	309.7	309.8	309.0	308.9	308.8	308.9	309.3	308.8	309.0
41	***	***	1.763	309.8	309.8	310.6	310.0	309.5	309.6	309.1	309.5	308.7	308.8	309.0	308.7	309.4
42	***	***	1.771	309.7	309.6	310.3	309.7	309.5	309.5	308.7	308.7	308.5	308.7	308.9	308.4	308.9
43	***	***	1.758	309.5	309.5	310.2	309.7	309.4	309.5	308.6	308.4	308.3	308.6	308.8	308.2	308.5
48	***	***	1.755	309.2	309.1	309.6	309.3	309.1	309.0	308.0	308.1	307.7	307.9	308.1	307.6	308.0
53	***	***	1.755	308.9	308.5	309.1	308.9	308.8	308.7	307.4	307.3	307.0	307.6	307.7	306.8	307.3
58	***	***	1.748	308.7	308.2	308.8	308.7	308.5	308.4	307.0	306.8	306.7	307.1	307.1	306.7	306.9
63	***	***	1.746	308.4	307.8	308.4	308.2	308.3	308.0	306.5	306.6	306.5	306.6	306.8	306.0	306.4
68	***	***	1.763	308.1	307.3	308.1	307.8	308.0	307.8	306.0	307.1	306.0	306.2	306.4	305.6	306.8
73	***	***	1.741	307.8	306.9	307.8	307.5	307.5	307.4	305.9	305.9	305.6	305.9	306.0	305.5	305.8
78	***	***	1.739	307.3	306.7	307.4	307.1	307.3	307.0	305.5	305.5	305.3	305.7	305.9	305.0	305.4
83	***	***	1.770	307.1	306.6	307.1	306.8	307.1	306.8	305.8	306.0	305.3	305.5	305.5	304.9	305.1
88	***	***	1.753	306.9	306.6	307.0	306.6	307.0	306.8	305.0	305.3	304.9	305.5	305.7	305.0	305.1
93	***	***	1.745	306.8	306.4	306.9	306.6	306.9	306.7	305.0	305.1	305.0	305.3	305.2	304.9	305.1
103	***	***	1.752	306.6	306.2	306.8	306.4	306.6	306.6	304.9	304.9	304.6	305.2	305.1	304.7	304.9
113	***	***	1.769	306.4	306.1	306.6	306.1	306.6	306.4	304.7	304.6	304.5	305.2	304.8	304.5	304.7
123	***	***	1.751	306.2	305.9	306.4	305.9	306.6	306.2	304.5	304.5	304.3	304.9	304.6	304.5	304.5
133	***	***	1.753	306.1	305.8	306.4	305.9	306.6	306.0	304.5	304.5	304.2	304.8	304.5	304.4	304.4
143	***	***	1.755	306.0	305.7	306.2	305.8	306.3	306.1	304.3	304.3	304.2	304.8	304.4	304.3	304.4
153	***	***	1.748	305.9	305.7	306.2	305.7	306.2	305.9	304.2	304.2	304.1	304.6	304.3	304.2	304.2
163	***	***	1.749	305.9	305.6	306.1	305.6	306.3	305.9	304.0	304.1	304.0	304.5	304.2	304.3	304.0
173	***	***	1.744	305.9	305.6	306.2	305.5	306.2	305.9	304.0	304.0	303.9	304.5	304.2	304.0	304.0
183	***	***	1.762	305.9	305.5	306.1	305.5	306.2	305.8	304.0	304.0	303.9	304.5	304.0	304.0	304.0
193	***	***	1.769	305.8	305.4	306.1	305.4	306.2	305.8	304.0	304.0	303.9	304.5	304.0	304.0	303.9
203	***	***	1.740	305.7	305.5	306.0	305.3	306.0	305.8	304.0	303.9	303.9	304.5	304.0	304.0	304.0
213	***	***	1.736	305.7	305.4	306.0	305.3	305.9	305.9	303.9	303.9	303.9	304.5	304.0	304.0	304.0
223	***	***	1.763	305.7	305.4	305.9	305.3	305.9	305.9	303.8	303.8	303.8	304.4	304.0	304.0	303.9
233	***	***	1.768	305.5	305.3	305.9	305.2	305.8	305.8	303.9	303.9	303.8	304.4	304.0	303.9	303.9
243	***	***	1.735	305.5	305.2	305.8	305.1	305.7	305.5	303.9	303.8	303.8	304.4	303.9	303.9	303.9
253	***	***	1.739	305.5	305.2	305.7	305.1	305.9	305.7	303.9	303.8	303.8	304.2	304.0	303.9	304.0
263	***	***	1.744	305.5	305.3	305.7	305.1	305.8	305.5	303.8	303.8	303.8	304.2	303.8	303.8	303.9
273	***	***	1.728	305.3	305.2	305.7	305.1	305.7	305.4	303.8	303.8	303.8	304.4	303.9	303.9	304.0
283	***	***	1.744	305.3	305.2	305.7	304.9	305.5	305.5	303.8	303.8	303.7	304.3	303.9	303.9	303.9
293	***	***	1.744	305.2	305.1	305.5	304.9	305.5	305.4	303.8	303.8	303.7	304.2	303.8	303.8	303.9
303	***	***	1.747	305.2	305.2	305.4	305.1	305.4	305.3	303.8	303.7	303.6	304.2	303.8	303.8	303.8
313	***	***	1.734	305.2	305.2	305.3	305.0	305.3	305.4	303.8	303.6	303.4	304.0	303.5	303.5	303.9

Table 10H — Scaling Run 207, Test Configuration 1: One 1.52 cm Nozzle

' 5 C METER CHAMBER OBSTRUCTED GAS MIXING RUN 207

TIME (SEC)	PRESSURANT FOW - TOTAL, P (BAR)	T (DEG K)	FILL-TANK P (BAR)	THERMOCOUPLES LOCATION I T(DEG K) 1	2	3	4	5	6	7	8	9	10	11	12	13
-5	***	***	1.047	303.1	302.9	303.1	302.9	302.6	303.0	301.5	301.5	301.2	301.9	301.6	301.3	301.5
-4	***	***	1.052	303.1	302.9	303.1	303.0	302.5	303.0	301.5	301.5	301.2	301.9	301.5	301.3	301.4
-3	***	***	1.049	303.1	302.9	303.1	303.0	302.6	303.0	301.5	301.5	301.2	301.9	301.6	301.3	301.5
-2	***	***	1.050	303.1	302.9	303.1	302.9	302.6	303.0	301.5	301.5	301.2	301.9	301.6	301.3	301.5
-1	***	***	1.052	303.0	302.9	303.1	302.9	302.6	303.0	301.5	301.5	301.2	301.9	301.6	301.3	301.4
0	6.354	293.5	1.049	303.1	302.9	303.1	302.9	302.6	302.9	301.4	301.5	301.2	302.0	301.6	301.3	301.5
1	6.285	293.6	1.060	303.1	302.9	303.1	303.0	302.8	303.1	301.6	302.4	301.9	302.7	302.1	301.8	301.7
2	6.179	307.8	1.083	304.8	304.5	303.3	304.5	304.0	305.0	303.1	304.4	303.4	304.2	303.8	303.4	303.3
3	6.049	291.9	1.114	306.7	306.5	304.9	306.5	306.0	307.0	305.2	306.3	305.3	305.9	305.8	305.4	305.3
4	5.923	289.2	1.140	308.2	308.2	306.4	308.3	307.6	308.6	306.8	308.1	306.6	307.3	307.1	307.1	306.9
5	5.798	288.6	1.175	309.0	309.2	307.6	309.2	308.5	309.4	307.9	309.0	307.8	308.4	308.5	308.3	308.2
6	5.682	287.9	1.198	310.0	310.0	308.8	310.0	309.3	310.2	308.8	309.7	308.7	309.0	309.1	309.1	309.0
7	5.600	287.4	1.218	310.6	310.7	309.8	310.6	310.2	310.7	309.2	309.8	309.2	309.5	309.5	309.5	309.4
8	5.489	287.2	1.247	310.9	311.1	310.2	311.0	310.3	311.1	309.7	310.2	309.7	309.9	310.0	309.9	309.9
9	5.380	286.8	1.271	311.2	311.4	311.0	311.4	310.4	311.3	310.0	310.5	310.0	310.2	310.2	310.2	310.2
10	5.273	286.4	1.297	311.4	311.6	311.6	311.6	310.6	311.5	310.3	310.7	310.3	310.4	310.5	310.4	310.4
11	5.169	286.1	1.320	311.6	311.6	311.6	311.7	310.6	311.5	310.4	310.7	310.3	310.6	310.5	310.4	310.4
12	5.105	285.8	1.333	311.6	311.6	311.9	311.8	310.6	311.6	310.4	310.7	310.4	310.7	310.6	310.6	310.6
13	5.007	285.5	1.361	311.6	311.7	312.0	311.9	310.4	311.5	310.6	310.6	310.4	310.7	310.7	310.5	310.6
14	4.909	285.2	1.384	311.6	311.7	311.9	311.8	310.4	311.5	310.6	310.7	310.4	310.6	310.8	310.6	310.7
15	4.820	284.9	1.407	311.6	311.7	312.0	311.8	310.3	311.5	310.6	310.6	310.5	310.7	310.8	310.6	310.7
16	4.732	284.5	1.428	311.5	311.7	312.0	311.7	310.3	311.6	310.5	310.6	310.4	310.8	310.7	310.4	310.7
17	4.644	284.4	1.449	311.6	311.7	312.2	311.7	310.3	311.5	310.6	310.5	310.4	310.7	310.7	310.5	310.7
18	4.557	284.0	1.476	311.6	311.6	312.0	311.7	310.3	311.3	310.5	310.4	310.3	310.6	310.7	310.3	310.5
19	4.508	283.8	1.483	311.4	311.6	311.9	311.6	310.2	311.4	310.4	310.4	310.2	310.6	310.6	310.4	310.5
20	4.427	283.8	1.506	311.4	311.6	311.9	311.6	310.2	311.3	310.4	310.3	310.2	310.6	310.6	310.2	310.4
21	4.346	283.4	1.532	311.5	311.6	311.8	311.6	310.1	311.2	310.3	310.2	310.2	310.4	310.4	310.2	310.3
22	4.274	283.4	1.549	311.4	311.6	311.7	311.6	310.1	311.1	310.2	310.2	310.2	310.4	310.4	310.2	310.3
23	4.200	283.2	1.566	311.2	311.5	311.7	311.6	310.2	311.2	310.2	310.1	310.1	310.3	310.4	310.0	310.2
24	4.153	282.8	1.584	311.3	311.3	311.6	311.5	310.2	311.0	310.2	310.2	310.0	310.3	310.3	310.2	310.2
25	4.085	282.7	1.600	311.2	311.4	311.7	311.4	310.0	311.1	310.2	310.0	310.0	310.2	310.2	310.1	310.2
26	4.017	282.4	1.614	311.0	311.2	311.6	311.3	310.2	310.9	310.2	309.9	310.0	310.2	310.2	309.9	310.1
27	3.949	282.2	1.639	311.0	311.2	311.5	311.3	309.8	311.0	310.1	309.9	309.9	310.2	310.2	309.8	310.1
28	3.885	282.0	1.660	311.0	311.2	311.5	311.2	310.0	310.9	309.9	309.9	309.8	310.2	310.1	309.8	310.0
29	3.845	281.9	1.663	311.0	311.1	311.4	311.2	309.8	310.9	310.0	309.8	309.8	310.2	310.2	309.8	310.0
30	3.783	281.9	1.685	311.0	311.1	311.5	311.3	309.7	310.8	310.0	309.8	309.7	310.1	310.0	309.8	309.9
31	3.721	281.6	1.707	310.9	311.0	311.3	311.1	309.7	310.8	309.8	309.8	309.7	310.0	310.0	309.7	309.8
32	3.665	281.7	1.718	310.9	310.9	311.3	311.0	309.8	310.7	309.9	309.8	309.7	309.9	309.9	309.7	309.9
33	3.607	291.5	1.741	310.8	310.9	311.2	310.9	309.7	310.7	309.7	309.6	309.5	309.9	309.9	309.5	309.8
34	3.554	291.1	1.753	310.8	310.9	311.1	310.9	309.7	310.7	309.8	309.5	309.5	309.8	309.9	309.5	309.7
35	3.524	286.9	1.764	310.7	310.8	311.1	310.9	309.2	310.6	309.6	309.2	309.4	309.7	309.7	309.3	309.5
36	***	***	1.769	310.6	310.7	311.1	310.7	309.7	310.3	309.4	309.1	309.3	309.5	309.5	309.2	309.4
37	***	***	1.762	310.4	310.3	310.9	310.5	309.7	310.2	309.0	308.8	309.0	309.3	309.2	308.8	309.0
38	***	***	1.757	310.2	310.1	310.8	310.3	309.5	310.0	308.7	308.6	308.8	309.1	308.8	308.5	308.7
39	***	***	1.760	310.0	309.8	310.5	310.0	309.5	309.8	308.5	308.4	308.7	308.9	308.7	308.3	308.6

COORDINATES

I	R (M)	THETA (DEG)	Z (M)
1	0.229	00	0.152
2	0.229	00	0.000
3	0.076	00	0.152
4	0.102	00	0.076
5	0.076	00	-0.076
6	0.152	00	0.152
7	0.229	00	0.762
8	0.229	00	0.991
9	0.076	00	0.076
10	0.229	00	-0.076
11	0.152	00	0.762
12	0.229	00	0.914
13	0.229	00	0.838

(Table continues)

UNCLASSIFIED

Table 10H — Scaling Run 207, Test Configuration 1: One 1.52 cm Nozzle (Continued)

5 C METER CHAMBER OBSTRUCTED GAS MIXING RUN 207

TIME (SEC)	PRESSURANT FOW - TOTAL P (BAR)	T (DEG K)	FILL-TANK P (BAR)	THERMOCOUPLES LOCATION I T(DEG K) 1	2	3	4	5	6	7	8	9	10	11	12	13
40	***	***	1.764	309.7	309.7	310.4	309.8	309.4	309.6	308.4	308.3	308.5	308.5	308.5	308.1	308.4
41	***	***	1.761	309.6	309.4	310.2	309.6	309.3	309.5	308.2	308.2	308.4	308.4	308.4	308.1	308.3
42	***	***	1.759	309.4	309.2	310.0	309.4	309.1	309.2	308.1	308.2	308.2	308.2	308.3	307.9	308.1
43	***	***	1.754	309.3	309.1	309.9	309.3	309.0	309.1	307.9	308.1	308.0	308.0	308.1	307.8	308.1
48	***	***	1.757	308.8	308.4	309.3	308.8	308.7	308.6	307.3	307.3	307.1	307.3	307.5	306.9	307.3
53	***	***	1.755	308.5	308.0	308.7	308.4	308.4	308.2	306.8	306.8	306.6	306.6	307.1	306.4	306.8
58	***	***	1.760	308.2	307.5	308.2	308.0	308.0	307.9	306.5	306.6	306.4	306.2	306.7	305.9	306.4
63	***	***	1.750	308.0	307.3	307.9	307.8	307.8	307.6	306.0	306.0	305.9	306.0	306.4	305.4	305.9
68	***	***	1.752	307.6	306.9	307.6	307.4	307.5	307.3	305.8	305.8	305.7	305.7	305.9	305.2	305.7
73	***	***	1.749	307.4	306.6	307.4	307.0	307.0	307.1	305.4	305.3	305.3	305.3	305.8	304.9	305.2
78	***	***	1.749	307.0	306.3	307.0	306.6	306.7	306.7	305.1	305.0	305.2	305.3	305.5	304.6	304.9
83	***	***	1.750	306.8	306.2	306.8	306.6	306.6	306.6	304.9	304.8	304.9	305.1	305.2	304.5	304.8
88	***	***	1.752	306.7	306.1	306.6	306.4	306.6	306.6	304.6	304.6	304.7	305.0	305.1	304.4	304.6
93	***	***	1.753	306.6	305.9	306.6	306.3	306.4	306.4	304.6	304.5	304.6	304.9	304.9	304.3	304.5
103	***	***	1.749	306.2	305.7	306.2	305.9	306.3	305.9	304.4	304.4	304.4	304.6	304.6	304.2	304.4
113	***	***	1.755	305.9	305.6	306.1	305.7	306.0	305.9	304.2	304.2	304.0	304.5	304.5	304.0	304.1
123	***	***	1.751	305.8	305.4	306.1	305.5	305.9	305.9	304.0	304.1	303.9	304.5	304.2	303.9	304.0
133	***	***	1.746	305.8	305.3	305.9	305.4	306.1	305.8	303.9	303.9	303.8	304.4	304.0	303.9	303.9
143	***	***	1.755	305.7	305.3	305.9	305.3	305.9	305.8	303.8	303.8	303.8	304.3	303.9	303.8	303.8
153	***	***	1.755	305.5	305.2	305.9	305.2	305.9	305.7	303.8	303.8	303.6	304.3	303.8	303.8	303.7
163	***	***	1.752	305.5	305.2	305.8	305.2	305.9	305.7	303.8	303.6	303.6	304.1	303.9	303.8	303.6
173	***	***	1.746	305.4	305.2	305.9	305.1	305.9	305.6	303.7	304.2	303.3	303.8	306.2	303.8	303.6
183	***	***	1.733	305.3	305.1	305.8	305.1	305.9	305.5	303.6	303.6	303.5	304.2	303.8	303.6	303.8
193	***	***	1.740	305.3	305.1	305.8	305.0	305.7	305.5	303.5	303.5	303.5	304.0	303.7	303.7	303.6
203	***	***	1.745	305.2	305.0	305.7	305.0	305.5	305.4	303.4	303.4	303.4	303.9	303.6	303.5	303.6

Table 10I — Scaling Run 208, Test Configuration 1: One 1.52 cm Nozzle

5 C METER CHAMBER OBSTRUCTED GAS MIXING RUN 208

TIME (SEC)	PRESSURANT FOW - TOTAL, P (BAR)	T (DEG K)	FILL-TANK P (BAR)	THERMOCOUPLES LOCATION I T(DEG K) 1	2	3	4	5	6	7	8	9	10	11	12	13
-5	***	***	1.056	298.0	297.8	297.8	297.8	297.3	298.0	296.4	296.3	295.9	296.8	296.5	296.3	296.4
-4	***	***	1.047	298.0	297.8	297.8	297.8	297.3	298.0	296.4	296.3	296.0	296.7	296.5	296.4	296.5
-3	***	***	1.053	298.0	297.8	297.8	297.8	297.3	297.9	296.4	296.3	295.9	296.8	296.5	296.3	296.4
-2	***	***	1.029	298.0	297.8	297.8	297.8	297.3	298.0	296.4	296.3	296.0	296.8	296.5	296.4	296.7
-1	***	***	1.057	298.0	297.8	297.8	297.8	297.3	298.0	296.4	296.4	295.9	296.8	296.6	296.3	296.4
0	6.330	288.2	1.034	298.0	297.8	297.8	297.8	297.3	298.0	296.7	296.4	296.2	296.8	296.5	296.5	296.5
1	6.348	288.1	1.059	298.0	297.8	297.8	297.8	297.3	298.0	296.5	298.0	296.0	296.9	296.7	296.7	296.5
2	6.207	309.3	1.066	299.3	298.8	298.0	298.8	298.2	299.5	296.9	298.1	299.0	304.1	303.4	298.5	298.3
3	6.068	291.2	1.109	300.7	300.4	298.9	300.5	299.4	301.0	299.3	300.9	305.5	306.3	299.7	299.3	301.3
4	6.521	287.2	1.191	302.6	302.5	300.6	302.5	301.4	302.8	305.3	303.2	302.2	313.3	301.7	314.1	301.2
5	5.879	285.8	1.141	303.9	303.8	302.1	303.9	302.9	304.2	301.9	303.1	302.0	302.4	302.4	302.3	302.2
6	5.739	285.2	1.180	304.5	304.6	303.1	304.6	303.4	304.9	302.8	310.0	304.8	316.7	309.8	312.0	303.0
7	5.611	285.0	1.220	305.1	305.3	304.1	305.2	304.2	305.5	303.8	304.5	303.5	304.1	304.2	304.2	303.9
8	5.490	284.5	1.250	305.7	305.8	304.9	305.8	304.6	305.8	304.2	304.8	304.0	304.7	304.7	304.5	304.4
9	5.394	284.1	1.255	306.0	306.2	305.7	306.3	304.9	306.1	304.6	305.2	304.4	304.9	305.0	305.0	305.0
10	5.324	283.8	1.257	306.2	306.2	305.9	306.4	305.2	306.2	304.8	305.2	304.6	305.2	305.1	305.1	305.2
11	5.207	283.5	1.308	306.5	306.5	306.3	306.6	305.4	306.4	305.0	305.3	304.9	305.3	305.3	305.2	305.3
12	5.109	283.2	1.305	306.6	306.6	306.6	306.6	305.2	306.4	305.2	305.3	305.0	305.5	305.3	305.3	305.5
13	4.998	283.0	1.360	306.5	306.6	306.6	306.7	305.4	306.4	305.2	305.3	305.0	305.5	305.6	305.3	305.4
14	4.915	282.6	1.370	306.6	306.7	306.7	306.8	305.2	306.5	305.3	305.2	305.1	305.5	305.5	305.3	305.5
15	4.859	282.4	1.377	306.6	306.7	306.7	306.8	305.3	306.4	305.3	305.2	305.1	305.7	305.5	305.3	305.5
16	4.748	282.0	1.405	306.6	306.6	306.8	306.8	305.3	306.4	305.4	305.2	305.1	305.5	305.5	305.4	305.5
17	4.663	281.8	1.444	306.6	306.6	306.7	306.7	305.0	306.3	305.3	305.3	305.0	305.5	305.7	305.2	305.3
18	4.581	281.6	1.443	306.6	306.6	306.7	306.6	304.9	306.3	305.3	305.2	305.0	305.5	305.5	305.2	305.4
19	4.483	281.5	1.497	306.4	306.6	306.7	306.6	305.2	306.2	305.1	305.1	305.1	305.4	305.4	305.2	305.2
20	4.437	281.0	1.502	306.5	306.5	306.6	306.6	304.9	306.2	305.2	305.1	304.9	305.3	305.5	305.2	305.2
21	4.367	280.9	1.498	306.4	306.6	306.6	306.6	304.8	306.2	305.2	305.0	305.0	305.3	305.3	305.1	305.4
22	4.267	280.7	1.548	306.3	306.4	306.6	306.6	304.5	306.1	305.1	305.1	304.9	305.2	305.3	305.1	305.1
23	4.209	280.5	1.555	306.2	306.4	306.6	306.5	304.8	306.1	305.0	304.9	304.8	305.2	305.2	304.9	305.0
24	4.137	280.2	1.551	306.3	306.4	306.5	306.4	304.8	306.1	305.0	304.8	304.8	305.2	305.1	304.9	305.2
25	4.077	280.1	1.591	306.1	306.2	306.4	306.3	304.8	306.0	304.9	304.8	304.8	305.1	305.2	304.9	305.0
26	4.014	279.9	1.616	306.1	306.2	306.4	306.3	304.8	305.9	304.9	304.8	304.6	305.1	305.2	304.8	305.0
27	3.946	279.5	1.602	306.1	306.1	306.3	306.2	304.7	305.9	305.0	304.6	304.5	305.0	305.0	304.8	305.1
28	3.869	279.4	1.646	306.0	306.1	306.2	306.2	304.5	305.8	304.7	304.5	304.5	305.0	304.9	304.6	304.7
29	3.812	279.4	1.677	305.9	306.0	306.2	306.1	304.5	305.8	304.5	304.6	304.5	304.9	304.9	304.6	304.5
30	3.789	279.1	1.664	305.9	306.0	306.1	306.1	304.5	305.8	304.6	304.5	304.5	304.9	304.8	304.6	304.8
31	3.707	279.0	1.684	305.9	305.9	306.0	306.0	304.5	305.7	304.7	304.5	304.5	304.9	304.8	304.6	304.8
32	3.651	278.8	1.719	305.8	305.9	306.0	305.9	304.5	305.7	304.6	304.5	304.4	304.8	304.9	304.5	304.6
33	3.603	278.6	1.712	305.8	305.9	306.0	305.9	304.5	305.7	304.7	304.4	304.8	304.8	304.8	304.5	304.8
34	3.531	288.4	1.745	305.7	305.8	305.9	305.8	304.5	305.6	304.5	304.2	304.3	304.6	304.6	304.5	304.6
35	3.501	288.3	1.771	305.7	305.8	305.9	305.8	304.5	305.7	304.4	304.2	304.2	304.6	304.6	304.4	304.4
36	3.501	279.8	1.746	305.5	305.8	305.9	305.8	304.3	305.4	304.3	303.9	303.9	304.5	304.4	304.0	304.4
37	***	***	1.749	305.4	305.3	305.8	305.4	304.3	305.2	303.9	303.6	303.7	304.2	304.0	303.8	304.0
38	***	***	1.768	305.2	305.1	305.5	305.2	304.2	305.0	303.7	303.4	303.4	303.9	303.8	303.5	303.7
39	***	***	1.758	305.1	304.9	305.4	305.0	304.1	304.9	303.5	303.1	303.1	303.7	303.6	303.2	303.5

COORDINATES

I	R (M)	THETA (DEG)	Z (M)
1	0.229	00	0.152
2	0.229	00	0.000
3	0.076	00	0.152
4	0.102	00	0.076
5	0.076	00	-0.076
6	0.152	00	0.152
7	0.229	00	0.762
8	0.229	00	0.991
9	0.076	00	0.076
10	0.229	00	-0.076
11	0.152	00	0.762
12	0.229	00	0.914
13	0.229	00	0.838

(Table continues)

UNCLASSIFIED

Table 10I — Scaling Run 208, Test Configuration 1: One 1.52 cm Nozzle (Continued)

5 C METER CHAMBER OBSTRUCTED GAS MIXING RUN 107

TIME (SEC)	PRESSURANT FOW - TOTAL P (BAR)	PRESSURANT FOW - TOTAL T (DEG K)	FILL-TANK P (BAR)	THERMOCOUPLES LOCATION I T(DEG K) 1	2	3	4	5	6	7	8	9	10	11	12	13
40	***	***	1.745	304.9	304.5	305.3	304.8	304.0	304.7	303.3	303.1	303.1	303.5	303.3	303.1	303.4
41	***	***	1.756	304.7	304.4	305.0	304.5	303.9	304.4	303.0	303.0	302.9	303.4	303.2	303.0	303.0
42	***	***	1.755	304.6	304.4	304.9	304.5	303.8	304.4	303.0	302.8	302.6	303.3	303.0	302.6	302.9
43	***	***	1.757	304.5	304.2	304.7	304.4	303.8	304.1	302.9	302.7	302.4	303.0	303.0	302.5	302.8
44	***	***	1.746	304.3	304.0	304.5	304.2	303.8	304.0	302.6	302.6	302.3	303.1	302.7	302.3	302.7
49	***	***	1.738	303.8	303.3	303.8	303.6	303.3	303.5	302.1	302.0	301.7	302.3	302.2	301.5	302.0
54	***	***	1.728	303.2	302.9	303.3	303.1	303.1	303.0	301.6	301.4	301.2	301.8	301.7	301.1	301.6
59	***	***	1.740	303.0	302.5	303.0	302.9	302.7	302.7	301.2	301.0	300.8	301.3	301.3	300.6	301.1
64	***	***	1.754	302.7	302.2	302.5	302.6	302.3	302.5	301.0	300.6	300.4	300.9	301.0	300.2	300.8
69	***	***	1.746	302.5	301.9	302.4	302.3	302.2	302.3	300.4	300.3	300.1	300.6	300.7	300.0	300 4
74	***	***	1.745	302.2	301.5	302.1	301.8	301.9	301.8	300.2	300.0	299.9	300.3	300.4	299.7	300.2
79	***	***	1.745	301.8	301.0	301.7	301.5	301.5	301.5	300.0	299.7	299.8	300.0	300.4	299.5	299.9
84	***	***	1.753	301.5	300.9	301.5	301.3	301.5	301.3	299.8	299.5	299.5	300.0	300.2	299.4	299.6
89	***	***	1.748	301.4	300.8	301.3	301.0	301.2	301.2	299.7	299.4	299.3	299.7	300.0	299.4	299.5
94	***	***	1.765	301.2	300.7	301.1	300.9	301.0	301.0	299.5	299.2	299.1	299.6	299.8	299.1	299.3
104	***	***	1.757	301.0	300.5	300.9	300.7	300.9	300.9	299.1	299.0	298.9	299.5	299.5	299.0	299.0
114	***	***	1.738	300.9	300.4	300.9	300.6	300.7	300.9	299.0	298.8	298.8	299.3	299.2	299.0	299.0
124	***	***	1.762	300.8	300.3	300.8	300.3	300.8	300.8	298.8	298.8	298.6	299.2	299.2	298.8	298.8
134	***	***	1.735	300.5	300.2	300.8	300.2	300.8	300.7	298.8	298.7	298.6	299.0	298.9	298.9	298.8
144	***	***	1.746	300.6	300.1	300.6	300.1	300.8	300.6	298.8	298.7	298.4	299.0	298.8	298.8	298.8
154	***	***	1.744	300.5	300.0	300.6	300.0	300.6	300.6	298.6	298.6	298.2	299.0	298.8	298.8	298.7
164	***	***	1.744	300.4	300.0	300.7	299.9	300.4	300.6	298.5	298.5	298.2	299.0	298.7	298.7	298.7
174	***	***	1.739	300.4	300.0	300.6	299.9	300.3	300.5	298.5	298.6	298.3	299.0	298.6	298.7	298.7
184	***	***	1.760	300.3	300.0	300.5	299.8	300.3	300.4	298.2	298.6	298.1	298.9	298.8	298.6	298.4
194	***	***	1.752	300.1	299.9	300.4	299.7	300.3	300.4	298.2	298.4	298.1	298.8	298.5	298.4	298.4
204	***	***	1.762	300.2	299.9	300.3	299.6	300.4	300.3	298.7	298.6	298.4	299.2	298.6	298.6	298.6
214	***	***	1.737	300.2	299.9	300.3	299.6	300.4	300.4	298.3	298.4	298.1	298.8	298.5	298.5	298.3
224	***	***	1.745	300.2	299.9	300.3	299.7	300.5	300.3	298.3	298.3	298.2	298.8	298.5	298.5	298.4
234	***	***	1.748	300.2	299.8	300.1	299.6	300.3	300.2	298.3	298.4	298.2	298.8	298.7	298.5	298.5
244	***	***	1.744	300.2	299.7	300.0	299.6	300.2	300.2	298.2	298.2	298.1	298.8	298.5	298.3	298.3
254	***	***	1.741	300.2	299.7	300.0	299.5	300.2	300.2	298.1	298.1	298.1	298.8	298.4	298.2	298.3
264	***	***	1.760	300.2	299.7	300.0	299.6	300.2	300.2	298.1	298.1	298.1	298.8	298.4	298.3	298.1

Table 10J — Scaling Run 209, Test Configuration 1: One 1.52 cm Nozzle

5 C METER CHAMBER OBSTRUCTED GAS MIXING RUN 209

TIME (SEC)	PRESSURANT FOW - TOTAL, P (BAR)	T (DEG K)	FILL-TANK P (BAR)	THERMOCOUPLES LOCATION I T(DEG K) 1	2	3	4	5	6	7	8	9	10	11	12	13
-5	***	***	1.068	298.5	298.4	298.3	298.4	297.8	298.5	297.5	296.9	296.6	297.4	297.5	298.8	298.8
-4	***	***	1.043	298.6	298.4	298.2	298.4	297.8	298.4	296.9	296.7	296.4	297.4	296.9	296.7	296.9
-3	***	***	1.062	298.5	298.4	298.4	298.4	297.8	298.5	296.8	296.7	296.4	297.4	297.0	296.8	296.8
-2	***	***	1.040	298.6	298.4	298.3	298.4	297.8	298.5	296.8	296.7	296.4	297.4	296.8	296.7	296.8
-1	***	***	1.062	298.5	298.4	298.4	298.4	297.8	298.5	296.7	296.7	296.5	297.3	297.0	296.8	296.8
0	6.378	288.8	1.040	298.6	298.4	298.3	298.4	297.8	298.5	296.8	296.7	296.4	297.4	296.8	296.7	296.9
1	6.350	288.8	1.065	298.5	298.4	298.4	298.4	297.8	298.5	296.7	297.2	296.4	297.3	296.9	296.8	296.7
2	6.258	311.9	1.062	299.7	299.3	298.4	299.3	298.7	299.9	297.5	298.3	297.7	298.7	298.1	297.8	297.8
3	6.097	290.5	1.125	301.9	301.7	299.9	301.9	300.7	302.2	299.6	300.8	299.6	300.6	300.4	300.0	299.7
4	5.981	287.1	1.130	303.7	303.6	301.7	303.6	302.4	304.1	301.4	302.5	301.4	302.0	302.0	301.9	301.5
5	5.836	286.2	1.179	304.5	304.5	302.8	304.6	303.5	304.8	302.6	303.6	302.6	303.3	303.2	303.1	302.8
6	5.738	285.7	1.188	305.2	305.2	303.8	305.2	304.0	305.3	303.7	304.4	303.5	304.2	304.1	304.1	303.9
7	5.616	285.1	1.198	305.9	306.0	304.9	306.0	304.7	306.0	304.5	305.0	304.2	304.9	304.7	304.8	304.8
8	5.538	284.7	1.216	306.3	306.5	305.9	306.6	305.3	306.6	304.8	305.3	304.6	305.2	305.1	305.1	305.2
9	5.466	284.4	1.271	306.6	306.6	306.2	306.6	305.8	306.6	306.3	306.6	305.7	306.4	305.9	306.5	307.4
10	5.326	284.0	1.284	306.9	307.0	306.7	307.1	305.9	306.8	306.6	306.4	306.0	307.1	306.8	305.7	305.8
11	5.244	283.8	1.315	307.0	307.2	307.0	307.2	305.9	307.1	306.7	306.6	306.3	306.6	307.5	306.8	306.8
12	5.107	283.6	1.342	307.1	307.3	307.3	307.3	305.9	307.1	306.8	307.1	306.1	307.0	306.2	306.1	306.3
13	5.121	283.1	1.379	307.2	307.3	307.3	307.5	306.0	307.0	308.3	307.1	307.6	308.1	309.1	307.4	308.4
14	5.012	282.9	1.389	307.1	307.4	307.4	307.5	305.9	307.0	307.9	306.9	307.5	307.4	307.7	307.4	308.3
15	4.881	282.7	1.394	307.1	307.4	307.5	307.4	305.9	307.0	306.2	305.7	305.5	306.1	305.9	305.7	305.9
16	4.835	282.4	1.417	307.1	307.3	307.4	307.4	305.9	306.9	307.3	306.2	306.2	306.5	306.6	307.0	307.3
17	4.688	282.0	1.446	307.1	307.2	307.3	307.3	305.5	306.8	305.9	305.9	305.8	306.4	307.3	305.9	306.3
18	4.628	281.9	1.446	307.0	307.1	307.3	307.3	305.5	306.8	305.9	306.1	305.6	305.9	306.1	305.8	305.9
19	4.534	281.7	1.476	307.0	307.1	307.3	307.2	305.6	306.8	306.2	305.7	306.0	306.3	306.0	305.8	306.0
20	4.481	281.3	1.504	306.9	307.1	307.1	307.1	305.4	306.7	305.9	305.9	306.4	306.2	305.9	305.7	305.7
21	4.378	281.2	1.515	306.8	307.0	307.1	307.0	305.2	306.6	305.7	305.6	305.3	305.9	305.8	305.7	305.7
22	4.301	281.1	1.549	306.8	307.0	307.1	307.0	305.6	306.6	306.4	307.9	305.4	305.8	305.9	306.4	306.4
23	4.277	280.8	1.544	306.8	306.9	307.0	307.0	305.4	306.6	306.5	308.9	305.4	306.8	312.3	306.2	306.6
24	4.194	280.6	1.593	306.8	306.8	307.0	307.0	305.2	306.6	306.2	306.0	305.6	307.1	306.1	305.8	305.8
25	4.224	280.4	1.579	306.7	306.8	307.0	306.8	305.2	306.6	306.9	306.4	308.2	306.6	308.7	306.7	309.1
26	4.119	280.2	1.627	306.6	306.7	306.8	306.8	305.2	306.5	306.6	305.8	306.0	307.4	306.3	306.8	309.1
27	3.979	279.9	1.630	306.6	306.6	306.8	306.7	305.2	306.4	310.7	306.6	308.8	305.8	305.7	306.1	309.5
28	3.974	279.7	1.667	306.6	306.6	306.8	306.6	305.1	306.5	308.5	305.9	307.5	307.5	307.5	306.6	306.6
29	3.942	279.5	1.665	306.6	306.6	306.8	306.6	305.2	306.6	306.5	306.7	305.5	306.7	306.0	305.8	306.4
30	3.813	279.5	1.705	306.5	306.6	306.7	306.6	305.2	306.4	305.7	305.2	305.1	306.2	309.0	305.9	309.7
31	3.762	279.2	1.695	306.4	306.6	306.8	306.6	305.1	306.3	305.4	305.2	306.5	305.5	305.6	306.9	306.4
32	3.705	279.2	1.724	306.4	306.6	306.6	306.6	305.1	306.3	305.5	309.5	305.1	305.4	305.8	305.9	306.8
33	3.659	278.9	1.748	306.4	306.3	306.6	306.4	305.1	306.1	305.7	305.3	305.0	306.2	305.7	305.1	306.6
34	3.595	288.8	1.736	306.3	306.3	306.5	306.4	304.8	306.2	305.2	305.1	305.4	305.5	305.4	305.0	305.5
35	3.542	288.8	1.759	306.3	306.3	306.5	306.4	304.9	306.1	305.9	305.0	307.4	305.5	305.9	305.2	305.7
36	3.560	281.9	1.781	306.2	306.0	306.3	306.2	304.7	305.9	304.9	304.5	304.5	305.0	305.0	305.2	305.3
37	***	***	1.765	305.9	305.8	306.1	305.9	304.9	305.7	305.1	304.5	304.4	304.7	304.8	304.6	304.6
38	***	***	1.748	305.7	305.5	306.0	305.7	304.8	305.4	304.8	304.2	304.0	304.5	305.0	304.8	304.5
39	***	***	1.770	305.4	305.3	305.9	305.4	304.7	305.3	304.9	304.3	304.0	304.7	304.5	304.2	304.9

COORDINATES

I	R (M)	THETA (DEG)	Z (M)
1	0.229	00	0.152
2	0.229	00	0.000
3	0.076	00	0.152
4	0.102	00	0.076
5	0.076	00	-0.076
6	0.152	00	0.152
7	0.229	00	0.762
8	0.229	00	0.991
9	0.076	00	0.076
10	0.229	00	-0.076
11	0.152	00	0.762
12	0.229	00	0.914
13	0.229	00	0.838

(Table continues)

UNCLASSIFIED

Table 10J — Scaling Run 209, Test Configuration 1: One 1.52 cm Nozzle (Continued)

5 C METER CHAMBER OBSTRUCTED GAS MIXING RUN 107

TIME (SEC)	PRESSURANT FOW - TOTAL P (BAR)	T (DEG K)	FILL-TANK P (BAR)	THERMOCOUPLES LOCATION I T(DEG K) 1	2	3	4	5	6	7	8	9	10	11	12	13
40	***	***	1.784	305.2	304.9	305.6	305.1	304.5	304.9	304.0	303.9	304.1	304.2	304.4	304.0	304.5
41	***	***	1.756	305.2	304.8	305.4	305.0	304.5	304.8	304.1	304.4	303.7	304.3	304.6	304.1	304.2
42	***	***	1.743	305.0	304.5	305.2	304.9	304.5	304.7	304.2	303.5	303.2	303.6	305.2	303.8	304.9
43	***	***	1.744	304.9	304.5	305.1	304.8	304.3	304.5	303.6	303.5	303.3	303.4	303.8	303.1	303.8
44	***	***	1.768	304.8	304.4	305.0	304.8	304.2	304.5	303.7	304.0	303.4	303.7	304.1	303.8	304.0
49	***	***	1.747	304.3	303.7	304.3	304.0	303.9	303.9	303.3	307.0	303.9	302.9	303.8	302.4	303.7
54	***	***	1.754	303.8	303.1	303.8	303.7	303.5	303.4	304.0	304.5	303.9	302.9	302.4	301.4	305.3
59	***	***	1.745	303.4	302.7	303.2	303.2	303.3	303.0	302.2	303.8	302.3	301.7	301.8	301.2	302.4
64	***	***	1.769	303.1	302.5	303.0	302.9	303.0	302.8	301.2	302.0	301.5	301.7	301.8	300.6	301.4
69	***	***	1.765	302.8	302.2	302.6	302.6	302.6	302.5	301.3	300.7	300.7	302.4	301.3	300.2	300.8
74	***	***	1.778	302.5	301.9	302.4	302.3	302.3	302.3	300.8	300.6	300.8	301.0	301.0	300.8	300.9
79	***	***	1.757	302.3	301.7	302.3	302.1	302.1	302.2	300.3	300.5	300.3	300.7	300.8	300.6	300.4
84	***	***	1.737	302.2	301.5	302.0	301.8	301.8	302.0	300.2	300.2	300.3	300.5	300.8	300.3	300.8
89	***	***	1.760	302.2	301.3	301.9	301.7	301.7	301.8	300.2	300.6	302.5	300.9	303.0	300.0	300.7
94	***	***	1.757	302.0	301.2	301.8	301.5	301.5	301.8	300.1	299.9	299.8	300.1	300.3	299.8	300.0
104	***	***	1.760	301.7	301.1	301.6	301.2	301.3	301.5	300.3	299.7	300.0	300.0	300.7	300.0	301.3
114	***	***	1.756	301.5	300.9	301.4	301.0	301.2	301.5	299.5	299.4	299.5	299.9	299.9	299.4	299.5
124	***	***	1.772	301.2	300.9	301.2	300.9	301.0	301.3	299.5	299.3	300.8	299.7	299.7	299.5	299.3
134	***	***	1.757	301.1	300.8	301.2	300.8	301.2	301.3	299.3	299.2	299.0	299.7	299.5	299.1	299.2
144	***	***	1.756	301.0	300.7	301.1	300.6	300.9	301.2	299.2	299.1	298.8	302.6	299.9	299.5	299.1
154	***	***	1.756	300.9	300.7	300.9	300.5	300.9	301.0	299.2	300.2	299.3	300.2	299.8	299.4	300.3
164	***	***	1.747	300.9	300.6	300.9	300.5	300.7	301.2	299.0	299.3	299.2	300.0	299.1	299.2	299.4
174	***	***	1.751	300.9	300.6	301.0	300.5	300.6	301.1	298.9	298.8	298.8	299.5	299.1	298.9	298.9
184	***	***	1.749	300.9	300.5	301.0	300.4	300.8	300.9	298.9	299.4	298.9	299.6	299.0	299.0	299.0
194	***	***	1.729	300.9	300.4	300.9	300.3	300.8	300.9	298.8	298.7	298.7	299.5	298.8	298.8	299.1
204	***	***	1.737	300.8	300.4	300.9	300.3	300.7	300.9	298.8	299.0	298.7	299.5	298.8	298.8	300.0
214	***	***	1.752	300.8	300.4	300.9	300.2	300.4	300.9	298.7	298.6	298.7	299.5	298.8	298.8	298.8
224	***	***	1.762	300.7	300.4	300.8	300.2	300.4	300.8	298.6	298.7	298.6	299.4	298.8	298.8	298.8
234	***	***	1.757	300.8	300.4	300.8	300.1	300.6	300.9	298.6	298.7	298.6	299.4	298.8	298.8	298.7
244	***	***	1.755	300.8	300.3	300.5	300.2	300.3	300.7	298.6	298.7	298.7	299.4	298.8	298.8	298.7
254	***	***	1.749	300.7	300.3	300.5	300.2	300.3	300.8	298.7	299.0	298.6	299.9	299.1	298.9	299.0
264	***	***	1.749	300.6	300.3	300.4	300.2	300.2	300.8	300.0	299.2	299.5	300.9	298.8	299.2	298.8
274	***	***	1.757	300.6	300.3	300.4	300.0	300.2	300.5	298.8	298.7	298.8	299.5	298.9	298.8	299.3
284	***	***	1.753	300.6	300.3	300.3	300.1	300.1	300.5	299.6	300.5	299.8	302.2	299.3	301.3	299.7

Table 10K — Scaling Run 210, Test Configuration 1: One 1.52 cm Nozzle

TIME (SEC)	PRESSURANT FOW - TOTAL, P (BAR)	T (DEG K)	FILL-TANK P (BAR)	THERMOCOUPLES LOCATION I T(DEG K) 1	2	3	4	5	6	7	8	9	10	11	12	13
-5	***	***	1.057	299.0	298.8	298.8	298.9	298.2	299.0	297.3	297.1	296.8	297.8	297.4	297.2	297.3
-4	***	***	1.056	299.0	298.8	298.8	298.8	298.2	298.9	297.3	297.2	296.9	297.8	297.4	297.2	297.3
-3	***	***	1.053	299.0	298.9	298.8	298.8	298.3	299.0	297.4	297.3	296.9	297.9	297.4	297.2	297.7
-2	***	***	1.056	299.0	298.8	298.8	298.8	298.3	298.9	297.4	297.4	297.1	297.9	297.5	297.3	297.4
-1	***	***	1.032	299.0	298.8	298.8	298.8	298.2	299.0	297.3	297.3	296.9	297.8	297.4	297.3	297.6
0	6.377	289.5	1.065	299.0	298.8	298.8	298.8	298.3	298.9	297.3	297.1	296.8	297.8	297.4	297.2	297.2
1	6.387	289.5	1.056	299.0	298.8	298.8	298.8	298.2	299.0	297.4	297.2	296.9	297.9	297.5	297.3	297.4
2	6.299	302.4	1.067	299.5	299.0	298.8	299.0	298.8	299.5	297.4	298.1	297.7	298.8	298.1	297.5	297.6
3	6.164	297.6	1.097	301.1	300.9	299.5	300.9	300.0	301.5	299.5	300.7	299.8	300.5	300.3	300.0	300.0
4	6.027	289.0	1.132	303.2	302.8	301.1	303.0	301.8	303.5	301.5	302.5	301.3	302.0	302.2	302.1	301.7
5	5.955	286.9	1.144	304.6	304.4	302.8	304.5	303.5	304.9	302.5	303.6	302.4	303.0	303.1	303.0	302.9
6	5.311	286.3	1.193	305.4	305.2	303.8	305.2	304.2	305.5	303.7	304.5	303.5	304.0	304.2	304.2	303.8
7	5.791	285.7	1.230	306.2	306.2	304.9	306.2	305.0	306.4	304.5	305.2	304.4	304.9	304.9	304.8	304.6
8	5.587	285.2	1.243	306.6	306.6	305.9	306.8	305.6	306.8	305.2	305.5	304.7	305.4	305.4	305.4	305.3
9	5.470	284.8	1.262	306.9	307.1	306.4	307.1	306.0	307.1	305.5	306.1	305.1	305.8	305.7	305.9	305.8
10	5.389	284.5	1.289	307.3	307.4	307.0	307.5	306.3	307.3	305.7	306.2	305.4	306.1	306.1	306.1	305.9
11	5.297	284.1	1.311	307.5	307.6	307.4	307.6	306.5	307.4	306.0	306.3	305.7	306.2	306.3	306.2	306.2
12	5.187	283.9	1.330	307.6	307.7	307.5	307.7	306.6	307.6	306.1	306.2	305.9	306.4	306.3	306.3	306.3
13	5.091	283.7	1.363	307.6	307.8	307.8	307.8	306.3	307.6	306.2	306.4	305.9	306.6	306.6	306.5	306.4
14	5.004	283.2	1.352	307.6	307.9	308.0	307.9	306.3	307.6	306.4	312.2	306.4	311.6	310.0	306.4	306.6
15	4.929	283.1	1.403	307.8	307.8	307.9	307.9	306.3	307.5	311.4	306.6	306.2	306.8	306.6	312.3	307.9
16	4.851	282.9	1.401	307.8	307.9	308.1	307.9	306.3	307.6	306.9	306.4	306.2	306.8	310.0	306.5	306.6
17	4.744	282.6	1.456	307.6	307.8	308.1	307.9	306.2	307.4	306.4	306.5	306.2	306.6	306.6	306.4	306.6
18	4.674	282.4	1.449	307.5	307.7	308.0	307.8	306.3	307.5	306.5	306.5	306.2	306.7	306.7	306.4	306.7
19	4.572	282.2	1.489	307.5	307.7	307.9	307.7	306.1	307.3	307.5	306.6	306.0	308.3	306.6	306.6	307.1
20	4.549	281.9	1.497	307.5	307.6	307.8	307.8	305.9	307.2	308.4	306.1	306.0	306.6	306.6	306.2	306.4
21	4.444	281.6	1.509	307.5	307.5	307.7	307.6	306.1	307.1	307.2	306.1	306.0	306.4	306.9	306.2	306.4
22	4.358	281.3	1.559	307.4	307.5	307.6	307.6	305.9	307.2	306.2	306.1	305.8	306.3	306.6	306.0	308.4
23	4.288	281.2	1.553	307.3	307.5	307.7	307.5	305.8	307.2	306.2	306.1	305.9	306.3	306.3	306.0	306.2
24	4.221	281.0	1.585	307.3	307.4	307.6	307.5	305.8	307.0	306.2	305.9	305.7	306.2	306.3	306.0	306.2
25	4.184	280.9	1.574	307.2	307.4	307.5	307.5	305.9	307.0	306.1	305.9	305.7	306.3	306.2	305.9	306.0
26	4.090	280.5	1.617	307.1	307.4	307.5	307.4	305.9	307.0	306.0	305.8	305.7	306.2	306.4	306.4	307.9
27	4.024	280.2	1.633	307.2	307.1	307.3	307.4	305.7	306.9	305.9	305.8	305.7	306.1	306.2	305.8	306.0
28	3.959	280.1	1.637	307.1	307.1	307.3	307.3	305.5	306.8	305.9	305.8	305.6	306.0	306.1	305.8	306.0
29	3.881	280.2	1.682	307.0	307.1	307.4	307.2	305.7	306.9	305.8	305.6	305.5	305.9	305.9	305.7	305.8
30	3.831	279.9	1.681	306.9	307.1	307.3	307.2	305.6	306.8	305.9	305.6	305.5	305.9	305.9	305.7	305.9
31	3.763	279.8	1.711	306.8	307.0	307.3	307.1	305.7	306.8	305.8	305.6	305.5	306.0	305.9	305.8	305.9
32	3.724	279.8	1.736	306.8	307.0	307.2	307.0	305.5	306.6	305.7	306.4	305.3	305.9	305.9	305.5	305.7
33	3.682	279.5	1.719	306.8	307.0	307.1	307.0	305.4	306.7	305.8	305.5	305.3	305.9	305.8	305.6	305.9
34	3.610	289.3	1.754	306.8	306.9	307.0	307.0	305.4	306.6	305.5	305.8	305.4	305.9	305.9	305.5	305.6
35	3.579	289.1	1.770	306.7	306.9	307.0	306.9	305.3	306.6	305.8	305.2	305.2	306.0	305.9	305.3	305.8
36	3.564	284.0	1.766	306.6	306.7	306.9	306.8	305.2	306.5	305.3	305.1	305.2	305.5	305.4	305.2	305.5
37	***	***	1.773	306.4	306.4	306.8	306.5	305.3	306.2	305.3	304.9	304.9	305.3	305.3	305.1	305.2
38	***	***	1.771	306.2	306.2	306.6	306.1	305.2	306.0	305.0	304.9	304.8	305.2	305.1	304.8	305.0
39	***	***	1.746	306.0	305.9	306.4	305.9	305.2	305.9	304.8	306.2	311.3	311.6	310.9	304.5	305.0

COORDINATES

I	R (M)	THETA (DEG)	Z (M)
1	0.229	00	0.152
2	0.229	00	0.000
3	0.076	00	0.152
4	0.102	00	0.076
5	0.076	00	-0.076
6	0.152	00	0.152
7	0.229	00	0.762
8	0.229	00	0.991
9	0.076	00	0.076
10	0.229	00	-0.076
11	0.152	00	0.762
12	0.229	00	0.914
13	0.229	00	0.838

(Table continues)

UNCLASSIFIED

Table 10K — Scaling Run 210, Test Configuration 1: One 1.52 cm Nozzle (Continued)

5 C METER CHAMBER OBSTRUCTED GAS MIXING RUN 107

TIME (SEC)	PRESSURANT FOW - TOTAL P (BAR)	T (DEG K)	FILL-TANK P (BAR)	THERMOCOUPLES LOCATION T T(DEG K) 1	2	3	4	5	6	7	8	9	10	11	12	13
40	***	***	1.773	305.9	305.7	306.2	305.8	305.1	305.7	304.7	304.7	304.5	304.9	304.9	304.5	305.9
41	***	***	1.748	305.8	305.6	306.1	305.7	305.1	305.7	304.4	304.2	304.0	304.5	304.6	304.2	304.5
42	***	***	1.749	305.7	305.4	305.9	305.6	305.0	305.5	304.4	304.2	304.1	304.6	304.5	304.1	304.5
43	***	***	1.770	305.5	305.2	305.8	305.5	304.9	305.3	304.1	304.0	303.9	304.5	308.0	303.9	304.1
44	***	***	1.757	305.4	305.1	305.7	305.4	304.8	305.2	304.0	308.6	303.8	308.4	304.2	303.8	304.1
49	***	***	1.764	304.8	304.2	305.0	304.7	304.5	304.5	303.5	303.6	303.1	303.3	303.7	303.1	303.4
54	***	***	1.757	304.4	303.6	304.2	304.1	303.9	303.9	303.0	303.1	302.6	302.7	303.1	302.4	303.0
59	***	***	1.757	303.8	303.1	303.8	303.6	303.4	303.5	302.9	303.0	302.3	302.3	303.2	302.4	302.6
64	***	***	1.781	303.5	302.9	303.4	303.3	303.0	303.1	302.2	301.9	301.7	301.6	302.4	301.5	302.1
69	***	***	1.776	303.1	302.6	303.1	303.0	302.7	302.9	302.5	302.7	302.3	302.4	302.7	301.3	301.8
74	***	***	1.771	303.1	302.5	302.8	302.9	302.6	302.9	301.5	302.0	301.3	302.0	301.9	300.9	301.8
79	***	***	1.738	303.0	302.5	302.6	302.7	302.5	302.7	302.0	301.3	302.0	301.6	302.2	300.6	304.5
84	***	***	1.751	302.9	302.4	302.6	302.6	302.5	302.6	300.9	301.2	300.5	301.4	301.1	300.4	300.9
89	***	***	1.761	302.7	302.2	302.4	302.4	302.4	302.4	300.9	300.8	300.6	301.4	301.1	302.4	300.9
94	***	***	1.755	302.6	302.0	302.4	302.2	302.3	302.3	300.7	300.4	300.4	301.0	300.9	300.3	300.5
104	***	***	1.777	302.3	301.8	302.2	301.9	302.0	302.1	300.4	300.2	300.1	300.8	300.8	300.1	300.3
114	***	***	1.750	302.0	301.6	302.0	301.6	301.8	301.9	300.4	300.0	300.0	300.8	300.4	300.1	300.2
124	***	***	1.759	301.8	301.3	301.8	301.3	301.5	301.8	300.0	299.9	299.6	300.4	300.2	300.0	300.0
134	***	***	1.743	301.7	301.2	301.7	301.2	301.3	301.7	299.8	299.7	299.5	300.2	299.9	299.7	299.8
144	***	***	1.761	301.5	301.2	301.7	301.2	301.2	301.6	300.2	299.8	299.7	300.3	300.2	299.9	300.0
154	***	***	1.756	301.5	301.0	301.5	301.0	301.2	301.5	299.7	299.9	299.5	300.4	300.0	300.0	299.9
164	***	***	1.753	301.4	301.0	301.4	300.9	300.9	301.5	300.0	299.7	299.5	300.4	300.0	300.1	300.2
174	***	***	1.761	301.3	300.9	301.2	300.9	301.0	301.5	299.8	299.5	299.5	300.2	299.9	299.8	299.7
184	***	***	1.738	301.4	300.9	301.3	300.9	301.2	301.5	299.5	299.5	299.3	300.1	299.6	299.6	299.6
194	***	***	1.765	301.2	300.9	301.2	300.8	301.2	301.3	299.5	299.5	299.3	300.0	299.6	299.5	299.5
204	***	***	1.738	301.3	300.9	301.3	300.9	301.1	301.3	299.3	299.3	299.3	299.9	299.4	299.4	299.5
214	***	***	1.746	301.2	300.9	301.2	300.8	301.0	301.2	299.9	299.9	299.7	300.6	300.2	300.2	300.2
224	***	***	1.754	301.2	300.9	301.2	300.8	301.0	301.2	299.5	299.4	299.4	300.0	299.6	299.6	299.8
234	***	***	1.755	301.2	300.9	301.2	300.8	301.2	301.3	299.5	299.5	299.5	300.3	299.6	299.5	299.5
244	***	***	1.759	301.2	300.9	301.2	300.8	301.0	301.2	299.7	299.6	299.5	300.5	300.0	299.8	299.9
254	***	***	1.756	301.0	300.9	301.2	300.8	301.0	301.2	299.5	299.4	299.3	300.2	299.5	299.6	299.9

Table 10L — Scaling Run 211, Test Configuration 1: One 1.52 cm Nozzle

5 C METER CHAMBER OBSTRUCTED GAS MIXING RUN 211

TIME (SEC)	PRESSURANT FOW - TOTAL, P (BAR)	T (DEG K)	FILL-TANK P (BAR)	THERMOCOUPLES LOCATION I T(DEG K) 1	2	3	4	5	6	7	8	9	10	11	12	13
-5	***	***	1.052	300.7	300.4	300.4	300.6	299.9	300.6	299.0	298.8	298.5	299.5	299.2	298.9	299.0
-4	***	***	1.059	300.7	300.5	300.4	300.6	299.9	300.6	299.0	298.8	298.5	299.4	299.1	298.8	299.0
-3	***	***	1.052	300.7	300.4	300.4	300.5	299.9	300.5	299.0	298.8	298.5	299.7	301.9	299.9	299.0
-2	***	***	1.063	300.7	300.4	300.4	300.6	299.9	300.6	299.0	298.8	298.5	299.5	299.2	298.8	299.0
-1	***	***	1.065	300.7	300.4	300.4	300.6	299.9	300.5	300.5	300.4	299.3	299.5	299.7	299.8	299.8
0	6.279	292.4	1.057	300.8	300.5	300.4	300.6	300.2	300.8	299.5	300.5	299.7	300.9	300.4	299.9	299.9
1	6.164	300.2	1.113	303.3	303.1	301.5	303.2	302.1	303.6	301.2	302.2	301.2	302.3	302.1	301.4	301.2
2	6.034	292.0	1.126	305.2	304.9	303.1	305.2	304.2	303.7	303.2	304.2	303.0	304.0	303.9	303.7	303.5
3	5.942	290.6	1.155	306.2	306.1	304.2	306.3	305.2	306.5	304.7	305.4	304.5	305.2	305.2	304.9	305.1
4	5.792	289.8	1.180	307.4	307.4	305.7	307.5	306.3	307.6	305.6	306.5	305.5	306.3	306.3	306.2	305.9
5	5.667	289.1	1.234	308.4	308.4	307.0	308.5	307.2	308.5	306.6	307.0	306.2	307.1	306.9	306.8	306.6
6	5.609	288.8	1.229	308.7	308.8	307.8	308.8	307.6	308.8	307.3	307.5	306.6	307.5	307.4	307.4	307.3
7	5.474	288.4	1.253	309.1	309.2	308.5	309.3	308.0	309.1	307.5	307.9	307.1	307.9	307.9	307.8	307.9
8	5.368	288.0	1.280	309.3	309.4	308.9	309.4	308.0	309.4	307.7	308.0	307.5	308.1	308.1	308.0	308.0
9	5.262	287.8	1.311	309.4	309.5	309.3	309.7	308.4	309.4	308.0	308.1	307.7	308.4	308.4	308.2	308.2
10	5.176	287.5	1.316	309.5	309.7	309.5	309.7	308.4	309.4	308.2	308.4	308.0	308.5	308.5	308.4	308.4
11	5.061	287.2	1.360	309.6	309.7	309.7	309.8	308.3	309.5	308.3	308.3	308.0	308.7	308.6	308.4	308.4
12	4.953	286.9	1.391	309.6	309.7	309.7	309.7	308.4	309.4	308.4	308.2	308.0	308.7	308.5	308.4	308.5
13	4.915	286.5	1.394	309.7	309.7	309.8	309.8	308.3	309.4	308.5	308.1	308.0	308.5	308.5	308.3	308.4
14	4.827	286.2	1.417	309.5	309.7	309.7	309.8	308.2	309.4	308.3	308.1	308.0	308.7	308.7	308.4	308.3
15	4.722	286.0	1.417	309.5	309.7	309.7	309.7	308.1	309.3	308.5	308.2	308.0	308.5	308.5	308.2	308.5
16	4.631	285.8	1.462	309.5	309.6	309.7	309.7	308.4	309.3	308.3	308.1	307.9	308.5	308.5	308.2	308.4
17	4.538	285.5	1.489	309.5	309.6	309.6	309.7	308.1	309.3	308.6	308.0	307.8	308.5	308.4	308.2	308.3
18	4.493	285.2	1.497	309.4	309.5	309.6	309.6	308.1	309.3	308.2	308.0	307.8	308.4	308.4	308.1	308.2
19	4.411	285.1	1.518	309.4	309.5	309.6	309.5	308.0	309.2	308.2	307.9	307.8	308.4	308.4	308.0	308.4
20	4.366	284.7	1.516	309.3	309.5	309.6	309.5	308.0	309.2	310.0	307.9	307.6	308.3	308.2	308.1	308.3
21	4.263	284.6	1.561	309.3	309.4	309.5	309.5	307.9	309.0	308.1	307.6	307.6	308.3	308.2	308.0	308.1
22	4.196	284.2	1.591	309.2	309.3	309.5	309.4	307.8	309.0	308.1	307.7	307.6	308.1	308.2	307.9	308.0
23	4.144	284.0	1.584	309.2	309.3	309.4	309.4	307.8	308.9	308.0	307.7	307.5	308.1	308.1	307.9	308.1
24	4.063	283.9	1.611	309.1	309.2	309.4	309.3	307.8	308.9	308.0	307.6	307.5	308.1	308.1	307.8	308.0
25	3.992	283.8	1.634	309.1	309.1	309.3	309.2	307.8	308.8	307.9	307.6	307.4	308.1	308.1	307.8	307.9
26	3.932	283.7	1.647	308.9	309.0	309.2	309.1	307.8	308.8	307.7	307.5	307.3	308.0	307.9	307.6	307.8
27	3.867	283.5	1.670	308.9	309.1	309.1	309.1	307.5	308.7	307.7	307.3	307.3	308.0	308.0	307.6	307.7
28	3.827	283.2	1.655	308.8	308.9	309.1	308.9	307.6	308.7	307.8	307.4	307.2	307.9	307.9	307.5	307.9
29	3.771	283.2	1.698	308.8	308.9	309.0	309.0	307.5	308.7	307.6	307.4	307.2	307.8	307.9	307.6	307.7
30	3.701	283.0	1.713	308.8	308.9	309.1	308.9	307.5	308.8	307.5	307.3	307.1	307.7	307.8	307.5	307.6
31	3.647	263.2	1.725	273.2	273.2	273.2	273.2	273.2	273.2	307.1	307.2	307.1	307.8	307.8	307.4	307.6
32	3.582	282.9	1.759	291.0	291.0	291.0	291.0	290.3	290.9	307.5	307.1	306.9	307.6	307.6	307.3	307.5
33	3.566	288.4	1.750	308.7	308.8	308.9	308.8	307.0	308.5	307.4	307.0	306.9	307.5	307.6	307.3	307.4
34	3.577	283.0	1.760	308.3	308.4	308.8	308.4	307.2	308.1	307.1	306.6	306.6	307.1	307.3	307.0	307.1
35	***	***	1.734	308.2	308.2	308.6	308.2	307.1	308.1	306.9	306.6	306.5	307.0	307.1	306.7	307.0
36	***	***	1.757	307.9	307.9	308.4	307.8	307.0	307.7	306.7	306.3	306.2	306.7	306.8	306.5	306.7
37	***	***	1.731	307.6	307.6	308.1	307.6	306.8	307.4	306.6	306.1	305.9	306.4	306.6	306.2	306.6
38	***	***	1.760	307.5	307.5	308.0	307.5	306.7	307.3	306.3	306.0	305.8	306.2	306.6	306.0	306.3
39	***	***	1.738	307.4	307.3	307.9	307.3	306.7	307.1	306.0	305.8	305.5	306.0	306.2	305.8	306.1

COORDINATES

I	R (M)	THETA (DEG)	Z (M)
1	0.229	00	0.152
2	0.229	00	0.000
3	0.076	00	0.152
4	0.102	00	0.076
5	0.076	00	-0.076
6	0.152	00	0.152
7	0.229	00	0.762
8	0.229	00	0.991
9	0.076	00	0.076
10	0.229	00	-0.076
11	0.152	00	0.762
12	0.229	00	0.914
13	0.229	00	0.838

(Table continues)

UNCLASSIFIED

Table 10L — Scaling Run 211, Test Configuration 1: One 1.52 cm Nozzle (Continued)

5 C METER CHAMBER OBSTRUCTED GAS MIXING RUN 211

TIME (SEC)	PRESSURANT FOW - TOTAL P (BAR)	T (DEG K)	FILL-TANK P (BAR)	THERMOCOUPLES LOCATION I T(DEG K) 1	2	3	4	5	6	7	8	9	10	11	12	13
40	***	***	1.748	307.3	307.0	307.5	307.2	306.6	307.0	305.9	305.7	305.3	305.9	306.1	305.7	305.9
41	***	***	1.757	307.1	307.0	307.5	307.1	306.6	306.8	305.9	305.6	305.2	305.9	305.9	305.5	305.9
42	***	***	1.745	307.0	306.9	307.2	307.1	306.6	306.6	305.7	305.4	305.1	305.7	305.7	305.3	305.7
47	***	***	1.767	306.6	306.0	306.6	306.5	306.1	306.2	305.1	304.7	304.4	304.8	305.2	304.5	304.9
52	***	***	1.748	306.1	305.6	306.0	306.0	305.8	305.7	304.5	304.4	303.8	304.4	304.8	304.0	304.5
57	***	***	1.730	305.8	305.1	305.7	305.6	305.3	305.4	304.1	303.9	303.5	303.7	304.5	303.5	304.2
62	***	***	1.734	305.5	304.7	305.3	305.3	305.0	305.2	303.8	303.5	303.3	303.4	304.0	303.1	303.7
67	***	***	1.743	305.2	304.5	305.0	304.9	304.6	304.9	303.3	303.2	303.1	303.3	303.8	302.9	303.3
72	***	***	1.739	305.0	304.4	304.8	304.8	304.5	304.8	303.1	302.7	302.7	303.2	303.3	302.5	303.0
77	***	***	1.763	304.8	304.1	304.6	304.5	304.4	304.6	302.7	302.5	302.4	303.1	303.1	302.3	302.6
82	***	***	1.764	304.7	303.9	304.5	304.4	304.4	304.5	302.4	302.2	302.3	303.0	302.8	302.0	302.4
87	***	***	1.745	304.6	303.8	304.2	304.2	304.2	304.4	302.4	302.2	302.2	302.9	302.7	302.1	302.3
92	***	***	1.741	304.4	303.7	304.2	304.0	304.1	304.2	302.3	302.2	302.0	302.6	302.6	302.0	302.3
102	***	***	1.739	304.1	303.6	304.0	303.8	303.8	304.0	302.1	302.0	301.8	302.4	302.5	302.5	302.5
112	***	***	1.750	303.8	303.4	303.8	303.6	303.7	303.8	302.0	301.7	301.5	302.3	302.2	301.7	301.8
122	***	***	1.747	303.8	303.2	303.6	303.4	303.5	303.6	301.7	301.5	301.3	302.2	302.0	301.6	301.8
132	***	***	1.741	303.6	303.1	303.6	303.3	303.6	303.5	301.6	301.4	301.2	302.1	301.8	301.6	301.5
142	***	***	1.748	303.4	303.1	303.5	303.1	303.4	303.5	301.5	301.2	301.1	302.0	301.7	301.5	301.5
152	***	***	1.739	303.3	303.0	303.4	303.1	303.3	303.3	301.3	301.2	301.0	302.0	301.5	301.4	301.4
162	***	***	1.746	303.2	302.9	303.3	303.0	303.1	303.3	301.2	301.0	300.9	301.8	301.5	301.3	301.3
172	***	***	1.747	303.1	302.9	303.3	302.9	303.1	303.2	301.2	301.0	300.9	301.8	301.3	301.2	301.2
182	***	***	1.745	303.1	302.9	303.3	302.8	303.3	303.3	301.0	300.9	300.9	301.7	301.2	301.2	301.2
192	***	***	1.733	303.1	302.7	303.2	302.7	303.4	303.2	301.0	300.9	300.8	301.7	301.2	301.2	301.1
202	***	***	1.719	303.1	302.7	303.1	302.7	303.3	303.1	301.0	300.9	300.8	301.7	301.2	301.1	301.2
212	***	***	1.741	303.1	302.7	303.1	302.7	303.3	303.1	300.9	300.9	300.8	301.7	301.1	301.1	301.0
222	***	***	1.739	303.1	302.6	303.1	302.6	303.1	303.1	301.0	300.9	300.8	301.7	301.2	301.0	301.0
232	***	***	1.747	303.0	302.6	303.1	302.6	303.0	303.1	301.0	300.8	300.8	301.6	301.0	301.0	301.0
242	***	***	1.744	303.0	302.6	303.1	302.6	302.9	303.1	300.9	300.8	300.8	301.5	301.0	301.0	301.0
252	***	***	1.729	303.0	302.6	303.1	302.6	302.9	303.1	300.9	300.9	300.8	301.6	301.0	301.0	301.0
262	***	***	1.717	303.0	302.6	303.0	302.5	302.9	303.1	300.9	300.8	300.6	301.5	300.9	300.9	301.2
272	***	***	1.719	303.0	302.6	303.0	302.5	302.9	303.1	300.9	300.8	300.8	301.5	300.9	300.9	300.9
282	***	***	1.730	302.9	302.6	303.1	302.4	303.0	303.1	300.8	300.8	300.6	301.5	300.9	300.9	300.9

Table 11A — Inferred Pressurant Distribution, Scaling Run 200: Test Configuration 1

INFERRED PRESSURANT DISTRIBUTION - 5 C METER CHAMBER OBSTRUCTED GAS MIXI

TIME (SEC)	TEMP(DEG C) MEAN	AIR	PRESSURANT		BETA	BETA/TSTAR	PRESSURANT FRACTION MEAN I = 1	2	3	4	5	6	7	8	9	10	11	12	13
COMMENCE VALVE OPENING																			
0.0	30.0	30.0	-182.5	-.6	0.0000		0.000	0.000	0.000	0.000	0.000	0.000	0.000	0.000	0.000	0.00	0.000	0.000	
1.0	30.6	30.7	23.8	-576.2	-2.0076		.003	.055	.099	.099	.099	.041	.055	.041	-.149	-.076	-.17	-.047	-.003	.011
VALVE FULLY OPEN																			
2.0	32.8	32.9	26.1	-160.8	-1.5419		.013	.003	.018	.268	-.012	.076	-.027	.047	-.144	-.012	-.01	-.041	-.027	.032
3.0	34.4	34.5	25.4	-61.1	-.4752		.021	-.015	-.036	.214	-.058	.018	-.036	.084	-.058	.051	.04	.018	.018	.029
4.0	35.8	36.5	26.4	36.6	1.8402		.069	.069	.049	.268	.059	.099	.049	.089	-.011	.079	.07	-.021	-.001	.089
5.0	36.8	37.6	26.5	-31.8	-.1724		.074	.072	.045	.189	.063	.099	.054	.090	-.009	.081	.09	.063	.036	.081
6.0	37.7	38.9	27.1	21.8	.5923		.099	.118	.101	.186	.110	.118	.101	.110	.042	.110	.10	-.000	.076	.110
7.0	38.2	39.7	28.2	27.0	1.1414		.136	.153	.135	.213	.135	.179	.144	.083	.083	.127	.16	.127	.092	.135
8.0	38.3	39.7	27.7	31.1	-.7399		.115	.136	.111	.161	.120	.153	.136	.120	.053	.103	.13	.095	.078	.095
9.0	38.7	40.5	28.6	24.7	.9319		.148	.170	.145	.195	.145	.170	.186	.145	.094	.128	.15	.136	.111	.145
10.0	38.9	40.9	29.3	25.5	.8105		.174	.192	.158	.192	.167	.244	.192	.175	.149	.141	.20	.158	.141	.158
11.0	39.0	41.1	29.3	60.5	-.0755		.173	.204	.162	.179	.170	.213	.204	.153	.145	.162	.19	.162	.145	.162
12.0	39.2	41.5	30.0	24.7	.8361		.201	.225	.190	.208	.199	.278	.243	.181	.190	.094	.22	.199	.181	.199
13.0	39.1	41.4	30.0	110.9	.0301		.201	.218	.192	.192	.200	.271	.245	.183	.183	.174	.21	.183	.174	.183
14.0	39.1	41.5	30.5	25.2	.6523		.222	.250	.205	.205	.214	.286	.268	.205	.223	.169	.23	.214	.196	.214
15.0	39.2	41.6	30.4	30.7	-.1404		.218	.245	.210	.210	.210	.290	.263	.219	.210	.085	.24	.219	.210	.219
16.0	39.1	41.6	30.8	26.4	.6438		.237	.273	.218	.227	.227	.319	.282	.218	.227	.199	.23	.227	.209	.218
17.0	39.0	41.6	31.1	26.6	.5401		.252	.281	.233	.224	.243	.337	.290	.233	.243	.224	.27	.243	.224	.233
18.0	38.9	41.7	31.2	26.1	.3043		.261	.287	.248	.239	.258	.354	.306	.239	.248	.229	.27	.239	.229	.239
19.0	38.9	41.7	31.5	26.1	.5299		.276	.307	.258	.258	.267	.356	.326	.248	.258	.258	.28	.267	.248	.248
20.0	38.8	41.6	31.5	15.9	-.0285		.274	.299	.270	.260	.260	.358	.319	.250	.250	.250	.29	.250	.250	.250
21.0	39.0	41.9	31.8	23.5	.4686		.289	.337	.297	.277	.307	.396	.357	.267	.267	.267	.31	.159	.267	.238
22.0	38.9	41.9	32.0	26.4	.5356		.303	.343	.312	.302	.312	.414	.363	.221	.302	.262	.30	.252	.272	.282
23.0	38.7	41.7	31.9	-25.8	.0209		.302	.338	.297	.297	.297	.400	.359	.256	.297	.287	.28	.256	.276	.287
24.0	38.8	41.9	32.3	24.5	.6109		.320	.364	.333	.333	.333	.437	.396	.302	.261	.312	.15	.292	.323	.312
25.0	38.7	41.8	32.3	30.3	.2189		.325	.378	.336	.325	.336	.431	.389	.315	.325	.304	.31	.294	.156	.315
26.0	38.5	41.5	32.3	35.4	.2435		.329	.360	.317	.317	.317	.425	.371	.295	.306	.306	.36	.295	.306	.306
27.0	38.6	41.7	32.4	23.2	.2338		.336	.378	.345	.356	.345	.443	.399	.258	.334	.323	.21	.323	.323	.323
28.0	38.4	41.5	32.5	29.2	.3841		.345	.372	.339	.328	.339	.427	.383	.316	.328	.316	.36	.328	.316	.328
29.0	38.6	41.8	32.7	20.7	.2343		.352	.401	.379	.379	.379	.478	.423	.192	.346	.192	.36	.324	.346	.368
30.0	38.3	41.5	32.7	34.9	.3652		.359	.385	.351	.351	.362	.453	.419	.328	.328	.305	.38	.328	.328	.339
31.0	38.3	41.5	32.8	26.0	.3619		.368	.397	.374	.374	.374	.466	.431	.328	.362	.328	.40	.339	.328	.270
COMMENCE VALVE CLOSURE																			
32.0	38.3	41.5	32.8	25.3	-.1166		.365	.404	.369	.369	.381	.438	.427	.323	.358	.335	.40	.243	.346	.346
33.0	38.3	41.4	33.1	133.6	.4663		.375	.409	.373	.373	.385	.481	.421	.349	.361	.337	.40	.349	.349	.276
VALVE FULLY CLOSED																			
34.0	38.4	41.4	33.7	157.6	.5500		.387	.447	.408	.408	.421	.499	.473	.395	.408	.382	.20	.369	.395	.226
35.0	35.1	37.2	31.9	350.7	1.2242		.387	.459	.403	.365	.403	.535	.497	.328	.309	.346	.45	.346	.252	.328
36.0	37.6	40.3	33.2	-276.2	-.9641		.387	.432	.403	.361	.417	.474	.460	.389	.361	.361	.40	.318	.389	.262
37.0	34.8	36.7	31.7	324.6	1.1331		.387	.442	.402	.323	.422	.462	.462	.362	.382	.323	.42	.343	.343	.343
38.0	35.8	38.1	32.3	-141.8	-.4950		.387	.445	.428	.376	.411	.428	.480	.307	.239	.342	.44	.376	.376	.376
39.0	36.2	38.5	32.4	-41.8	-.1458		.387	.466	.466	.400	.466	.482	.499	.251	.383	.185	.33	.416	.317	.367
40.0	35.8	38.1	32.3	41.8	.1458		.387	.445	.462	.394	.445	.462	.480	.256	.290	.342	.42	.359	.307	.359
41.0	37.6	40.3	33.3	-187.0	-.6527		.387	.447	.447	.390	.447	.433	.476	.390	.362	.404	.23	.333	.376	.291
42.0	35.8	38.1	32.3	187.0	.6527		.387	.408	.425	.356	.408	.408	.443	.322	.408	.288	.46	.374	.356	.374
43.0	31.6	32.3	30.5	806.9	2.8165		.387	.382	.382	.210	.325	.325	.498	.268	.382	.382	.61	.325	.555	.382
44.0	38.4	40.9	34.5	-969.8	-3.3851		.387	.403	.403	.340	.387	.371	.450	.356	.403	.387	.45	.371	.434	.277
45.0	35.3	37.0	32.5	328.0	1.1450		.387	.402	.424	.336	.380	.358	.469	.380	.380	.336	.46	.358	.358	.380
46.0	32.8	33.9	31.1	430.3	1.5020		.387	.363	.398	.257	.363	.257	.468	.363	.363	.327	.53	.363	.503	.468
47.0	35.5	37.2	32.6	-451.4	-1.5755		.387	.412	.434	.347	.412	.347	.456	.368	.434	.347	.43	.347	.390	.303
48.0	36.0	37.9	33.0	-65.5	-.2286		.387	.389	.389	.327	.368	.307	.429	.348	.409	.409	.45	.368	.470	.368
49.0	35.3	37.0	32.5	88.7	.3096		.387	.361	.406	.317	.361	.294	.428	.339	.406	.384	.47	.384	.450	.428
50.0	36.2	38.1	33.1	-109.2	-.3811		.387	.365	.405	.305	.365	.305	.425	.385	.385	.405	.46	.365	.465	.385

(Table continues)

UNCLASSIFIED

Table 11A — Inferred Pressurant Distribution, Scaling Run 200: Test Configuration 1 (Continued)

INFERRED PRESSURANT DISTRIBUTION - 5 C METER CHAMBER OBSTRUCTED GAS MIXI

TIME (SEC)	TEMP(DEG C) MEAN	AIR	PRESSURANT	BETA	BETA/TSTAR	PRESSURANT FRACTION MEAN	I = 1	2	3	4	5	6	7	8	9	10	11	12	13
VALVE FULLY CLOSED																			
51.0	31.8	32.4	30.8	785.2	2.7409	.387	.387	.449	.201	.325	.140	.511	.387	.325	.449	.63	.263	.572	.387
52.0	35.5	36.9	33.2	-723.0	-2.5237	.387	.319	.373	.266	.319	.213	.373	.506	.373	.399	.55	.319	.479	.533
53.0	31.3	31.6	30.8	890.5	3.1084	.387	.155	.286	-.106	.025	-.368	.417	.417	.025	.548	1.33	.417	.548	1.333
54.0	35.6	36.6	34.1	-904.2	-3.1562	.387	.333	.415	.251	.333	.168	.415	.457	.251	.539	.66	.374	.374	.457
55.0	33.5	34.2	32.5	326.8	1.1406	.387	.387	.561	.329	.445	.155	.503	.503	-.771	.561	.96	.387	.561	.445
56.0	35.6	36.6	34.2	-326.8	-1.1406	.387	.355	.479	.273	.355	.190	.438	.231	.314	.396	.56	.396	.603	.438
57.0	35.5	36.4	34.0	22.5	.0786	.387	.312	.523	.312	.354	.186	.439	.354	.312	.354	.65	.270	.523	.439
58.0	34.2	35.0	33.0	180.3	.6294	.387	.321	.574	.270	.321	.118	.422	.321	.219	.422	.77	.270	.574	.422
59.0	37.6	38.7	35.7	-402.6	-1.4052	.387	.321	.520	.321	.354	.221	.420	.321	.321	.387	.65	.321	.487	.387
60.0	33.4	34.0	32.4	549.1	1.9168	.387	.258	.692	.196	.382	.072	.444	.382	.258	.382	.81	.196	.568	.382
61.0	36.3	37.3	34.8	-438.0	-1.5287	.387	.378	.651	.417	.456	.261	.534	-.285	.066	.222	.76	.417	.612	.534
62.0	35.5	36.4	34.0	105.9	.3698	.387	.253	.601	.340	.340	.167	.470	.427	.080	.384	.77	.253	.514	.427
63.0	31.6	31.9	31.1	776.1	2.7090	.387	.058	.964	.188	.317	-.201	.706	.447	.058	.447	.96	-.201	.835	.447
64.0	36.0	36.8	34.7	-821.3	-2.8666	.387	.325	.658	.420	.468	.230	.515	.325	.230	.420	.42	.325	.325	.372
65.0	31.8	32.1	31.3	770.7	2.6903	.387	.099	1.209	.237	.376	-.318	.654	.376	-.457	.515	1.62	-.179	.654	.237
66.0	35.8	36.5	34.7	-755.6	-2.6373	.387	.330	.729	.387	.444	.159	.501	.273	.216	.501	.72	-.012	.387	.387
67.0	34.6	35.2	33.7	168.2	.5872	.387	.247	.719	.314	.382	.044	.449	.449	-.091	.179	1.05	.247	.517	.517
68.0	33.9	34.4	33.1	117.9	.4115	.387	.171	.703	.247	.323	-.058	.323	.399	.095	.399	1.08	.247	.551	.551
69.0	37.0	37.8	35.8	-411.9	-1.4376	.387	.220	.565	.269	.368	.122	.417	.417	.269	.368	.81	.319	.417	.467
70.0	32.1	32.4	31.7	762.4	2.6613	.387	-.063	.911	.216	.355	-.480	.494	.355	.076	.355	1.60	.076	.494	.633
71.0	34.1	34.5	33.4	-442.5	-1.5447	.387	.059	.668	.233	.407	-.116	.407	.494	.146	.407	1.01	.233	.581	.494
72.0	36.0	36.6	35.1	-273.5	-.9547	.387	.154	.681	.286	.417	.022	.417	.088	.286	.417	.87	.351	.549	.483
73.0	32.8	33.2	32.3	509.5	1.7785	.387	-.032	.779	.200	.432	-.380	.547	.547	.316	.432	1.35	-.612	.663	.779
74.0	34.9	35.4	34.1	-385.4	-1.3452	.387	.065	.762	.220	.453	-.090	.453	.453	-.245	.453	1.07	.297	.685	.453
75.0	33.9	34.3	33.2	169.8	.5928	.387	-.024	.712	.068	.344	-.207	.344	.528	.252	.344	1.17	.252	.620	.620
76.0	30.7	30.8	30.7	969.2	3.3829	.387	-3.231	3.352	-1.350	.532	-6.05	.530	1.471	-1.350	.530	7.11	-1.350	2.412	2.412
77.0	34.8	34.9	34.5	-1042.5	-3.6387	.387	.370	1.678	.370	1.024	-.5[illegible]	1.024	-.938	-2.027	1.024	2.54	-2.463	1.460	1.460
78.0	36.5	36.7	36.2	-221.7	-.7740	.387	-.282	.936	-.282	.240	-.8[illegible]4	.240	.414	.414	.588	1.63	.066	.936	.936
79.0	32.5	32.6	32.3	638.4	2.2285	.387	-.791	1.396	-.791	.303	-2.249	-.062	1.031	.303	.303	2.85	-.062	1.396	1.396
80.0	35.1	35.3	34.8	-492.8	-1.7200	.387	-.375	.917	-.375	.271	-1.237	.055	.702	.486	.486	1.77	.271	1.133	.917
81.0	37.7	38.0	37.4	-291.9	-1.0189	.387	.166	.964	.006	.485	-.633	.485	.645	.805	.645	.80	.325	.485	-.153
82.0	32.7	32.8	32.5	696.9	2.4327	.387	-.705	1.114	-.705	.387	-2.523	.023	.750	.750	.387	2.56	.023	1.842	1.114
83.0	37.0	37.3	36.7	-644.0	-2.2480	.387	.087	.973	.087	.619	-.622	.442	1.505	-.445	.619	-.09	.264	.442	1.151
84.0	33.9	34.0	33.7	411.9	1.4376	.387	-.202	.891	-.475	.345	-1.567	.072	.891	1.164	.345	1.98	-1.021	1.438	1.165
85.0	34.2	34.4	34.0	-61.5	-.2146	.387	.110	1.138	-.146	.624	-1.174	.367	.881	-4.255	.881	2.16	.624	2.165	1.651
86.0	37.4	37.6	37.0	-387.1	-1.3512	.387	-.155	.532	-.155	.360	-.841	.189	.532	.704	.189	1.21	.360	1.219	.875
87.0	34.4	34.6	34.2	360.2	1.2573	.387	-.285	.962	-.534	.464	-1.282	.214	.214	.962	.214	1.71	.463	.713	1.212
88.0	30.6	30.5	30.6	1101.7	3.8455	.386	9.391	-3.059	9.391	1.919	19.348	4.409	-3.059	-3.059	1.919	-10.5	1.919	-13.02	-10.53
89.0	32.5	32.4	32.6	-895.0	-3.1241	.387	2.640	-.526	3.431	.265	5.805	1.057	-.526	-.526	1.057	-2.90	1.057	-3.692	-2.109
90.0	36.3	36.2	36.5	-622.7	-2.1737	.387	1.490	-.060	1.878	.327	3.041	.715	-.060	-.060	.715	-1.22	.715	-1.223	-1.223
91.0	37.6	37.4	37.7	-126.0	-.4396	.387	1.464	-.243	1.464	.440	2.830	.781	.440	-.243	.440	-.92	.781	-1.238	-.926
92.0	35.8	35.7	36.0	187.0	.6527	.387	-.027	-1.681	.387	-1.268	2.041	-.854	.801	2.041	1.627	-1.68	2.454	-2.508	3.695
93.0	31.3	31.3	31.3	917.2	3.2015	.387	16.286	-38.791	6.286	-25.038	5.109	-25.03	2.521	167.73	2.504	-80.1	2.521	-80.10	-38.79
94.0	35.3	35.3	35.3	-876.1	-3.0580	.387	10.865	-3.863	7.184	-.18	229.274	-.178	-.178	-3.863	3.503	-14.9	-.178	-1.22	-11.22
95.0	39.8	39.8	39.9	-430.0	-1.5011	.387	4.799	-3.699	6.926	.55	017.549	.550	.550	-3.699	2.674	-7.95	.550	-5.826	-7.951
96.0	35.1	35.1	35.1	451.8	1.5770	.388	8.917	-11.24	8.923	-6.20	339.163	-1.163	3.877	8.923	13.963	-21.3	-1.163	-21.33	-16.29
97.0	33.2	33.2	33.2	331.0	1.1553	.388	16.290	-21.991	6.290	-6.68	254.570	.981	-6.67	316.290	16.290	-37.3	.981	-21.99	-21.99
98.0	31.4	31.4	31.4	538.4	1.8793	.385	17.000	-55.003	5.022	-19.00	125.02	-1.000	-1.000	-19.008	9.022	-91.0	17.000	-73.02	-19.00
99.0	34.8	34.8	34.8	-764.4	-2.6681	.387	9.875	-13.62	9.875	-7.74	639.237	-1.875	4.004	-1.875	9.875	-19.4	4.004	-19.49	-7.746
100.0	37.6	37.6	37.6	-324.6	-1.1331	.387	4.372	-7.584	8.358	-3.60	328.290	.387	.387	-3.599	4.372	-15.5	4.372	-7.589	-7.589

Table 11B — Inferred Pressurant Distribution, Scaling Run 202: Test Configuration 1

INFERRED PRESSURANT DISTRIBUTION - 5 C METER CHAMBER OBSTRUCTED GAS MI

TIME (SEC)	TEMP(DEG C) MEAN	AIR	PRESSURANT		BETA	BETA/TSTAR	PRESSURANT FRACTION MEAN I = 1	2	3	4	5	6	7	8	9	10	11	12	13
COMMENCE VALVE OPENING																			
0.0	30.8	30.8	106.3		-1.9	0.0000	0.000	0.000	0.000	0.000	0.000	0.000	0.000	0.000	0.000	0.00	0.000	0.000	
1.0	31.0	30.8	24.0		4837.6	-85.1246	-.018	-.014	.000	.000	-.014	-.073	-.029	-.059	-.029	.000	-.01	-.014	.000	.015
VALVE FULLY OPEN																			
2.0	32.8	30.0	128.9		184.6	8.5567	.028	.028	.028	.014	.028	.025	.031	.027	.035	.029	.03	.030	.029	.028
3.0	34.9	33.2	63.6		39.8	1.2290	.058	.052	.055	-.004	.058	.045	.065	.055	.081	.052	.10	.065	.068	.055
4.0	36.4	34.1	75.6		405.1	-.8888	.056	.049	.054	.018	.056	.049	.064	.059	.085	.052	.05	.059	.071	.059
5.0	37.4	36.3	47.4		31.1	1.2657	.094	.063	.081	-.055	.081	.054	.099	.108	.189	.081	.09	.108	.171	.135
6.0	38.0	37.0	47.5		-38.1	-.1162	.096	.063	.082	-.052	.091	.053	.101	.101	.196	.110	.08	.120	.167	.139
7.0	38.6	38.2	41.8		23.3	.5480	.117	.012	.067	-.125	.067	-.043	.067	.149	.341	.094	.25	.149	.286	.204
8.0	39.1	39.2	38.8		22.3	.4841	.136	1.290	.353	1.759	.353	1.290	.353	-.351	-1.288	.118	.58	-.351	-1.757	-.585
9.0	39.4	39.8	37.2		22.8	.3583	.150	.291	.213	.369	.174	.446	.213	.096	-.138	.096	.25	.057	-.021	-.099
10.0	39.6	40.3	36.0		22.8	.3725	.164	.235	.185	.232	.162	.302	.232	.115	.045	.092	.23	.138	.045	.092
11.0	39.7	40.8	34.8		25.3	.6266	.184	.246	.180	.197	.180	.312	.230	.114	.147	.147	.19	.180	.131	.131
12.0	39.8	41.0	34.6		20.1	.0989	.188	.247	.200	.200	.200	.325	.247	.153	.138	.153	.20	.138	.106	.138
13.0	39.8	41.2	34.2		25.3	.3377	.199	.239	.211	.182	.211	.338	.239	.154	.168	.168	.21	.168	.154	.140
14.0	39.8	41.5	33.6		25.7	.7129	.221	.265	.227	.190	.215	.353	.265	.177	.202	.190	.24	.190	.177	.177
15.0	39.8	41.6	33.6		22.3	.0308	.222	.255	.230	.193	.230	.318	.255	.193	.181	.193	.25	.205	.181	.193
16.0	39.7	41.8	33.3		26.1	.6693	.242	.277	.242	.206	.242	.359	.277	.195	.218	.218	.26	.230	.206	.206
17.0	39.7	42.0	33.2		25.5	.5129	.257	.300	.255	.221	.255	.380	.289	.221	.232	.221	.27	.243	.221	.221
18.0	39.7	41.9	33.1		10.5	-.0123	.256	.293	.258	.235	.247	.373	.304	.213	.235	.224	.27	.235	.224	.213
19.0	39.6	42.0	33.1		26.1	.5875	.272	.314	.269	.246	.258	.392	.302	.224	.258	.246	.29	.269	.235	.235
20.0	39.5	42.0	33.1		32.6	.0710	.274	.298	.276	.242	.264	.388	.320	.242	.242	.253	.29	.264	.231	.242
21.0	39.5	42.1	33.1		26.5	.6374	.291	.329	.295	.251	.284	.407	.340	.251	.273	.262	.30	.273	.262	.251
22.0	39.4	42.1	33.2		27.1	.6895	.309	.346	.312	.268	.301	.424	.357	.279	.301	.279	.32	.290	.268	.268
23.0	39.3	42.0	33.1		25.6	-.2935	.301	.336	.292	.258	.292	.415	.359	.258	.291	.292	.31	.280	.269	.258
24.0	39.3	42.1	33.2		26.5	.5762	.316	.347	.325	.291	.313	.425	.381	.269	.291	.291	.32	.291	.280	.280
25.0	39.2	42.1	33.2		28.0	.3941	.326	.369	.324	.301	.313	.425	.380	.290	.301	.301	.34	.313	.279	.290
26.0	39.2	42.1	33.3		27.4	.2228	.331	.371	.337	.303	.326	.439	.382	.292	.303	.303	.36	.292	.303	.292
27.0	39.1	42.1	33.4		27.4	.5907	.345	.400	.354	.331	.343	.446	.400	.285	.343	.320	.35	.320	.308	.285
28.0	39.2	42.1	33.3		27.9	-.4146	.336	.399	.354	.320	.343	.433	.399	.229	.308	.331	.35	.320	.320	.252
29.0	39.3	42.4	33.5		25.0	.6739	.353	.414	.380	.358	.358	.504	.425	.278	.346	.301	.35	.301	.267	.301
30.0	39.2	42.4	33.6		27.3	.4263	.363	.427	.393	.359	.370	.496	.427	.302	.359	.302	.35	.359	.275	.290
31.0	39.1	42.3	33.6		4.2	-.0040	.363	.419	.396	.362	.373	.500	.419	.316	.339	.339	.35	.304	.293	.304
COMMENCE VALVE CLOSURE																			
32.0	39.2	42.4	33.7		24.4	.3365	.371	.447	.413	.378	.401	.516	.447	.310	.321	.310	.36	.321	.310	.287
33.0	39.2	42.4	33.9		-20.2	.3527	.379	.453	.417	.382	.417	.524	.382	.334	.334	.311	.38	.334	.323	.334
VALVE FULLY CLOSED																			
34.0	39.0	42.1	33.9		-5.5	.0963	.380	.437	.413	.376	.400	.497	.449	.316	.352	.292	.42	.292	.340	.352
35.0	44.7	49.4	37.1		74.3	-1.2952	.380	.415	.391	.366	.383	.489	.415	.333	.374	.358	.39	.366	.342	.317
36.0	40.4	44.0	34.6		-52.3	.9123	.380	.409	.387	.345	.387	.441	.420	.355	.377	.355	.38	.377	.355	.345
37.0	40.6	44.2	34.7		2.6	-.0461	.380	.409	.409	.346	.378	.430	.420	.356	.378	.356	.39	.367	.356	.335
38.0	41.1	44.9	35.0		7.6	-.1333	.380	.414	.403	.353	.393	.434	.424	.373	.363	.373	.36	.322	.373	.353
39.0	44.2	48.7	36.8		36.8	-.6414	.380	.388	.397	.338	.397	.397	.405	.363	.372	.363	.40	.380	.372	.363
40.0	37.4	40.0	33.1		-97.7	1.7036	.380	.428	.428	.327	.413	.428	.442	.356	.370	.356	.44	.341	.269	.341
41.0	42.0	45.9	35.7		74.9	-1.3061	.380	.412	.421	.343	.392	.402	.421	.353	.353	.353	.41	.363	.372	.343
42.0	41.5	45.3	35.4		-7.0	.1224	.380	.412	.422	.341	.412	.392	.432	.361	.361	.341	.40	.361	.351	.351
43.0	39.5	42.8	34.3		-29.1	.5068	.380	.422	.422	.339	.410	.386	.433	.351	.351	.351	.41	.351	.386	.328
44.0	44.0	48.4	36.9		58.5	-1.0201	.380	.419	.410	.367	.401	.384	.419	.332	.375	.375	.41	.384	.401	.254
45.0	40.1	43.5	34.6		-50.2	.8763	.380	.422	.422	.366	.400	.377	.434	.276	.344	.344	.42	.366	.400	.366
46.0	41.1	44.8	35.2		15.7	-.2739	.380	.418	.418	.377	.418	.377	.439	.211	.366	.346	.42	.366	.408	.366
47.0	37.4	40.0	33.1		-63.7	1.1107	.380	.439	.425	.367	.410	.367	.454	.338	.251	.323	.43	.352	.425	.352
48.0	40.6	44.1	34.9		56.4	-.9832	.380	.412	.423	.380	.391	.369	.434	.326	.358	.348	.41	.358	.380	.348
49.0	43.5	47.7	36.6		36.5	-.6373	.380	.391	.409	.364	.382	.364	.409	.346	.373	.373	.40	.364	.400	.364
50.0	40.1	43.4	34.6		-44.4	.7753	.380	.396	.419	.363	.385	.363	.419	.340	.363	.363	.41	.351	.396	.363

(Table continues)

UNCLASSIFIED

Table 11B — Inferred Pressurant Distribution, Scaling Run 202: Test Configuration 1 (Continued)

INFERRED PRESSURANT DISTRIBUTION - 5 C METER CHAMBER OBSTRUCTED GAS MIXI

TIME (SEC)	TEMP(DEG C) MEAN	AIR	PRESSURANT	BETA	BETA/TSTAR	PRESSURANT FRACTION MEAN	I = 1	2	3	4	5	6	7	8	9	10	11	12	13
VALVE FULLY CLOSED																			
51.0	41.3	45.0	35.3	18.2	-.3166	.380	.393	.404	.363	.383	.352	.414	.363	.373	.363	.41	.363	.393	.363
52.0	36.7	39.1	32.8	-81.4	1.4203	.380	.405	.420	.373	.389	.341	.420	.341	.341	.357	.43	.341	.420	.357
53.0	41.1	44.8	35.2	79.2	-1.3807	.380	.407	.407	.365	.386	.344	.397	.355	.365	.355	.41	.365	.407	.365
54.0	38.8	41.8	33.9	-36.3	.6339	.380	.403	.416	.365	.378	.327	.403	.340	.353	.378	.42	.353	.429	.365
55.0	42.7	46.8	36.2	56.5	-.9863	.380	.397	.407	.369	.379	.341	.407	.369	.350	.360	.40	.350	.416	.388
56.0	39.0	42.1	34.0	-53.5	.9331	.380	.388	.413	.350	.375	.325	.400	.363	.375	.363	.42	.363	.413	.388
57.0	37.6	40.2	33.2	-27.5	.4789	.380	.390	.419	.361	.376	.318	.419	.347	.361	.376	.41	.347	.433	.376
58.0	42.0	45.9	35.7	71.3	-1.2434	.380	.390	.410	.360	.380	.331	.400	.360	.380	.370	.41	.360	.410	.380
59.0	36.5	38.8	32.7	-94.0	1.6397	.380	.390	.423	.357	.374	.291	.407	.357	.374	374	.44	.341	.440	.374
60.0	42.4	46.3	36.0	98.0	-1.7093	.380	.387	.406	.367	.377	.338	.396	.367	.377	.377	.40	.367	.416	.358
61.0	39.7	42.9	34.5	-37.5	.6548	.380	.381	.405	.369	.381	.322	.405	.357	.381	357	.42	.369	.416	.369
62.0	36.5	38.8	32.7	-63.3	1.1039	.380	.393	.425	.343	.393	.294	.409	.343	.360	360	.45	.360	.442	.360
63.0	42.0	45.9	35.8	94.0	-1.6397	.380	.379	.419	.369	.389	.330	.409	.349	.369	.369	.41	.359	.409	.369
64.0	38.6	41.6	33.8	-51.1	.8918	.380	.395	.447	.369	.395	.330	.421	.356	.382	369	.36	.317	.421	.369
65.0	40.6	44.1	35.0	32.0	-.5582	.380	.394	.438	.372	.383	.339	.416	.328	.372	.350	.42	.350	.405	.361
66.0	40.8	44.3	35.1	2.6	-.0453	.380	.385	.439	.363	.385	.320	.407	.353	.374	.353	.43	.353	.407	.363
67.0	37.6	40.2	33.3	-55.2	.9623	.380	.400	.472	.371	.414	.328	.429	.357	.371	.357	.41	.241	.414	.371
68.0	41.7	45.4	35.6	66.9	-1.1671	.380	.382	.422	.361	.392	.321	.402	.341	.382	.371	.42	.351	.422	.371
69.0	40.8	44.3	35.1	-12.3	.2145	.380	.390	.422	.368	.390	.325	.401	.347	.390	325	.44	.347	.422	.368
70.0	38.8	41.8	33.9	-31.4	.5471	.380	.384	.422	.359	.397	.320	.409	.320	.397	.359	.44	.333	.435	.359
71.0	43.5	47.6	36.6	64.5	-1.1252	.380	.388	.416	.370	.397	.343	.407	.316	.416	.379	.43	.334	.397	.343
72.0	39.2	42.3	34.1	-58.5	1.0210	.380	.374	.411	.362	.387	.313	.399	.362	.411	362	.43	.337	.424	.362
73.0	39.2	42.3	34.1	0.0	0.0000	.380	.380	.429	.368	.392	.306	.405	.343	.392	.368	.42	.331	.442	.355
74.0	43.6	47.9	36.8	60.5	-1.0546	.380	.373	.418	.364	.382	.328	.391	.346	.400	373	.42	.355	.409	.373
75.0	37.9	40.6	33.5	-82.2	1.4346	.380	.375	.431	.361	.375	.305	.389	.361	.389	.361	.44	.347	.431	.375
76.0	40.1	43.4	34.7	37.6	-.6555	.380	.377	.424	.354	.389	.320	.377	.354	.377	.377	.43	.354	.424	.377
77.0	43.1	47.1	36.5	40.4	-.7052	.380	.373	.421	.355	.392	.326	.373	.355	.392	.373	.41	.364	.421	.383
78.0	39.0	42.0	34.1	-57.6	1.0041	.380	.365	.429	.353	.391	.302	.365	.365	.403	.365	.45	.340	.416	.391
79.0	38.3	41.1	33.7	-13.1	.2285	.380	.358	.439	.345	.385	.290	.372	.372	.385	.372	.45	.345	.439	.385
80.0	42.6	46.5	36.2	64.0	-1.1160	.380	.373	.421	.353	.382	.314	.373	.363	.392	.373	.42	.363	.411	.402
81.0	39.0	42.0	34.1	-51.4	.8966	.380	.365	.429	.353	.391	.289	.365	.378	.391	353	.45	.353	.416	.403
82.0	36.7	39.0	32.8	-47.5	.8277	.380	.361	.442	.345	.394	.264	.361	.378	.394	.361	.47	.345	.426	.394
83.0	41.7	45.4	35.6	85.8	-1.4968	.380	.365	.416	.365	.386	.304	.365	.375	.396	.365	.42	.375	.406	.396
84.0	38.6	41.6	33.9	-46.6	.8132	.380	.368	.420	.355	.394	.277	.355	.381	.394	368	.45	.368	.407	.394
85.0	38.6	41.6	33.9	0.0	0.0000	.380	.367	.432	.354	.393	.276	.380	.380	.380	380	.43	.367	.406	.393
86.0	43.5	47.6	36.7	67.6	-1.1787	.380	.369	.415	.360	.388	.305	.379	.369	.379	.379	.42	.388	.397	.388
87.0	40.8	44.3	35.1	-34.0	.5927	.380	.363	.418	.352	.385	.298	.374	.374	.396	.374	.43	.374	.407	.385
88.0	37.9	40.7	33.5	-48.0	.8374	.380	.364	.434	.364	.406	.280	.378	.378	.392	336	.43	.364	.420	.392
89.0	40.8	44.3	35.1	48.0	-.8374	.380	.372	.416	.362	.394	.296	.372	.372	.394	.372	.42	.383	.394	.383
90.0	42.7	46.7	36.3	25.7	-.4489	.380	.372	.410	.362	.391	.305	.381	.372	.391	372	.41	.381	.410	.381
91.0	40.1	43.4	34.7	-36.3	.6327	.380	.375	.421	.363	.398	.294	.386	.375	.398	.340	.43	.375	.398	.386
92.0	39.2	42.2	34.2	-14.5	.2537	.380	.375	.412	.350	.400	.289	.375	.363	.388	.363	.45	.375	.412	.388
93.0	37.2	39.7	33.1	-38.2	.6664	.380	.378	.423	.348	.408	.272	.378	.363	.393	.363	.43	.363	.423	.393
94.0	39.5	42.7	34.4	44.1	-.7690	.380	.371	.407	.359	.395	.299	.383	.371	.383	.371	.43	.383	.419	.371
95.0	41.5	45.2	35.5	29.1	-.5068	.380	.383	.404	.362	.394	.311	.373	.373	.383	.373	.41	.373	.404	.394
96.0	42.6	46.5	36.2	13.7	-.2390	.380	.381	.401	.362	.391	.314	.381	.372	.391	.362	.41	.381	.401	.391
97.0	40.8	44.3	35.1	-23.6	.4114	.380	.379	.401	.368	.390	.303	.379	.379	.390	357	.42	.379	.401	.390
98.0	38.6	41.6	33.9	-34.6	.6028	.380	.384	.410	.358	.397	.306	.384	.371	.384	.358	.42	.371	.410	.384
99.0	36.0	38.1	32.5	-59.3	1.0340	.380	.390	.425	.354	.407	.266	.372	.372	.372	.354	.44	.372	.425	.390
100.0	40.2	43.6	34.8	84.4	-1.4718	.380	.395	.417	.372	.406	.304	.383	.350	.383	383	.42	.395	.327	.395

Table 11C — Inferred Pressurant Distribution, Scaling Run 203: Test Configuration 1

INFERRED PRESSURANT DISTRIBUTION - 5 C METER CHAMBER OBSTRUCTED GAS MI

TIME (SEC)	TEMP(DEG C) MEAN	AIR	PRESSURANT	BETA	BETA/TSTAR	PRESSURANT FRACTION MEAN I =	1	2	3	4	5	6	7	8	9	10	11	12	13
COMMENCE VALVE OPENING																			
0.0	31.1	31.1	-10.4	-.1	0.0000	0.000	0.000	0.000	0.000	0.000	0.000	0.000	0.000	0.000	0.000	0.00	0.000	0.000	
1.0	31.5	31.5	29.7	753.7	5.4482	.007	-.045	.181	.238	.238	-.158	-.158	.068	-.215	-.102	-.10	.012	.012	.125
VALVE FULLY OPEN																			
2.0	33.3	33.3	32.2	-60.0	-.7134	.019	-.039	-.039	1.310	-.039	.382	-.545	.298	-.714	-.208	-.20	-.124	-.124	.299
3.0	35.1	35.3	30.8	45.1	1.3929	.049	.153	.131	.554	.109	.198	.020	.020	-.292	-.003	-.04	-.069	-.114	-.025
4.0	36.6	37.2	29.6	30.0	1.0114	.080	.122	.109	.333	.082	.161	.069	.056	-.076	.056	.08	.056	-.036	.030
5.0	37.6	38.1	30.1	89.2	-.7378	.073	.106	.081	.243	.081	.119	.044	.032	-.068	.106	.10	.056	-.006	.044
6.0	38.2	39.3	29.2	29.8	1.2761	.112	.134	.134	.233	.125	.144	.115	.085	.026	.105	.12	.095	.045	.085
7.0	38.9	40.3	29.4	21.0	.4208	.129	.165	.146	.210	.128	.183	.119	.100	.054	.128	.15	.119	.073	.100
8.0	39.3	41.0	29.6	20.9	.3549	.144	.166	.148	.201	.148	.201	.139	.122	.086	.148	.17	.130	.086	.122
9.0	39.6	41.4	29.9	24.0	.4537	.160	.185	.177	.194	.151	.220	.168	.133	.107	.159	.18	.159	.107	.133
10.0	39.7	41.8	30.2	25.1	.5501	.178	.190	.182	.199	.173	.225	.190	.164	.138	.173	.19	.190	.138	.164
11.0	39.9	42.0	30.3	-1.4	-.0025	.180	.206	.197	.189	.172	.257	.197	.163	.146	.163	.19	.163	.129	.155
12.0	40.0	42.3	30.6	25.0	.5970	.199	.223	.206	.214	.197	.291	.214	.180	.163	.188	.20	.190	.163	.163
13.0	40.1	42.6	31.0	24.1	.5594	.217	.242	.225	.207	.216	.294	.242	.199	.182	.207	.22	.207	.182	.199
14.0	40.0	42.5	30.9	9.6	-.0118	.216	.235	.218	.200	.209	.313	.244	.209	.183	.209	.22	.200	.183	.183
15.0	40.0	42.8	31.5	25.0	.8386	.242	.263	.246	.237	.246	.325	.272	.210	.228	.219	.24	.228	.210	.219
16.0	39.9	42.7	31.6	27.7	.2599	.249	.272	.245	.227	.245	.362	.272	.218	.227	.227	.26	.236	.216	.227
17.0	39.9	42.8	31.8	25.2	.3665	.260	.283	.256	.238	.256	.347	.283	.247	.247	.238	.26	.247	.238	.238
18.0	39.9	42.8	31.9	25.9	.2146	.266	.296	.278	.242	.269	.388	.287	.251	.251	.242	.27	.251	.187	.242
19.0	39.8	42.8	32.1	26.9	.4452	.278	.300	.291	.263	.291	.393	.300	.253	.244	.253	.28	.263	.244	.244
20.0	39.8	42.8	32.3	26.0	.5054	.292	.310	.300	.272	.291	.395	.319	.272	.272	.262	.30	.281	.253	.272
21.0	39.7	42.8	32.3	-20.3	.0089	.292	.312	.293	.274	.293	.389	.322	.265	.274	.265	.31	.274	.255	.265
22.0	39.6	42.8	32.7	26.2	.8531	.315	.340	.320	.300	.310	.428	.350	.280	.290	.280	.32	.300	.280	.290
23.0	39.6	42.8	32.7	23.8	-.0298	.314	.338	.308	.299	.308	.417	.348	.279	.299	.279	.32	.308	.279	.289
24.0	39.6	42.8	32.9	26.8	.4638	.326	.353	.333	.303	.323	.434	.363	.293	.313	.303	.32	.313	.283	.293
25.0	39.5	42.8	33.0	26.7	.3702	.335	.369	.338	.318	.328	.430	.369	.307	.307	.307	.34	.328	.297	.307
26.0	39.4	42.7	32.9	16.7	-.0378	.333	.360	.340	.319	.329	.442	.370	.299	.299	.309	.35	.319	.299	.299
27.0	39.4	42.8	33.2	26.2	.5975	.348	.384	.363	.331	.352	.478	.373	.311	.331	.300	.36	.331	.300	.311
28.0	39.3	42.6	33.1	16.6	-.0639	.346	.368	.347	.316	.347	.484	.379	.305	.316	.326	.35	.326	.316	.305
29.0	39.3	42.6	33.3	26.5	.6245	.361	.393	.372	.340	.361	.490	.404	.318	.340	.318	.37	.340	.318	.329
30.0	39.3	42.6	33.4	27.3	.1960	.366	.396	.374	.352	.363	.471	.396	.331	.352	.341	.36	.341	.331	.341
31.0	39.2	42.6	33.6	27.4	.5666	.379	.413	.379	.357	.379	.490	.401	.335	.368	.357	.37	.368	.346	.346
COMMENCE VALVE CLOSURE																			
32.0	39.2	42.6	33.5	122.9	.0152	.379	.408	.375	.353	.375	.486	.420	.353	.353	.353	.38	.364	.342	.353
33.0	39.1	42.4	33.6	22.6	.1641	.382	.403	.369	.358	.381	.517	.415	.347	.358	.358	.38	.369	.347	.358
VALVE FULLY CLOSED																			
34.0	39.1	42.3	34.0	60.2	.4367	.390	.411	.386	.362	.386	.495	.435	.362	.374	.350	.41	.374	.350	.374
35.0	40.7	44.3	34.9	-62.8	-.4553	.390	.417	.406	.375	.385	.555	.417	.311	.375	.353	.39	.375	.353	.353
36.0	43.1	47.5	36.3	-79.2	-.5745	.390	.404	.386	.359	.386	.467	.413	.359	.395	.368	.39	.386	.377	.377
37.0	41.2	45.0	35.2	60.7	.4406	.390	.414	.403	.353	.393	.454	.424	.363	.383	.363	.39	.383	.363	.383
38.0	38.0	40.9	33.5	129.4	.9391	.390	.415	.415	.334	.401	.442	.428	.361	.361	.361	.41	.388	.375	.375
39.0	42.6	46.8	36.0	-172.6	-1.2519	.390	.428	.419	.363	.419	.428	.437	.252	.391	.372	.40	.391	.382	.382
40.0	39.9	43.4	34.5	90.0	.6531	.390	.431	.431	.364	.409	.431	.454	.387	.387	.387	.42	.196	.387	.387
41.0	40.5	44.1	34.8	-20.1	-.1459	.390	.419	.419	.355	.408	.408	.430	.355	.376	.365	.40	.387	.365	.376
42.0	39.6	43.0	34.3	34.2	.2479	.390	.450	.438	.380	.426	.438	.450	.323	.403	.403	.31	.415	.231	.403
43.0	36.7	39.3	32.8	138.1	1.0020	.390	.415	.431	.353	.400	.400	.431	.369	.353	.384	.44	.384	.353	.353
44.0	40.8	44.6	35.0	-182.5	-1.3243	.390	.409	.430	.378	.399	.399	.420	.378	.274	.389	.43	.389	.399	.378
45.0	41.2	45.0	35.2	-12.3	-.0894	.390	.384	.424	.364	.394	.384	.414	.364	.374	.384	.43	.394	.384	.374
46.0	40.5	44.1	34.8	25.1	.1821	.390	.402	.435	.360	.402	.381	.413	.360	.370	.370	.43	.392	.381	.370
47.0	39.8	43.2	34.4	27.1	.1964	.390	.404	.438	.359	.404	.381	.415	.359	.381	.370	.41	.381	.393	.370
48.0	37.6	40.4	33.2	96.3	.6990	.390	.429	.456	.387	.429	.387	.443	.081	.387	.415	.45	.401	.415	.387
49.0	40.5	44.1	34.8	-122.7	-.8905	.390	.395	.427	.374	.395	.374	.416	.363	.384	.384	.40	.384	.384	.384
50.0	39.9	43.4	34.5	20.1	.1459	.390	.394	.417	.361	.394	.372	.406	.372	.372	.394	.41	.383	.406	.383

(Table continues)

UNCLASSIFIED

Table 11C — Inferred Pressurant Distribution, Scaling Run 203: Test Configuration 1 (Continued)

INFERRED PRESSURANT DISTRIBUTION - 5 C METER CHAMBER OBSTRUCTED GAS MIXI

TIME (SEC)	TEMP(DEG C) MEAN	AIR	PRESSURANT	BETA	BETA/TSTAR	PRESSURANT FRACTION MEAN	I = 1	2	3	4	5	6	7	8	9	10	11	12	13
VALVE FULLY CLOSED																			
51.0	40.3	43.9	34.7	-13.5	-.0982	.390	.384	.428	.373	.395	.363	.406	.373	.384	.384	.41	.384	.395	.384
52.0	39.2	42.5	34.1	42.3	.3067	.390	.385	.432	.361	.396	.361	.408	.373	.385	.385	.40	.385	.406	.385
53.0	37.6	40.4	33.2	74.9	.5432	.390	.384	.439	.356	.384	.356	.411	.384	.384	.370	.42	.370	.411	.398
54.0	40.1	43.7	34.6	-109.8	-.7969	.390	.399	.432	.377	.410	.377	.421	.388	.224	.388	.43	.399	.421	.399
55.0	39.2	42.5	34.1	35.6	.2582	.390	.376	.412	.365	.388	.353	.412	.365	.388	.388	.42	.388	.424	.388
56.0	42.1	46.2	35.7	-102.3	-.7419	.390	.387	.416	.368	.397	.359	.397	.368	.397	.378	.41	.387	.416	.387
57.0	38.3	41.4	33.6	140.7	1.0210	.390	.394	.433	.368	.394	.342	.407	.381	.381	.368	.42	.381	.420	.381
58.0	41.9	45.9	35.6	-135.3	-.9820	.390	.394	.413	.375	.384	.346	.403	.375	.394	.384	.41	.384	.423	.384
59.0	37.8	40.7	33.4	160.4	1.1635	.390	.394	.435	.367	.381	.326	.408	.367	.394	.381	.42	.381	.435	.381
60.0	40.5	44.1	34.8	-113.8	-.8257	.390	.383	.416	.373	.383	.340	.405	.373	.405	.383	.40	.383	.427	.394
61.0	42.6	46.8	36.0	-70.2	-.5092	.390	.380	.417	.380	.389	.352	.408	.371	.399	.380	.40	.371	.417	.399
62.0	38.7	41.8	33.8	140.6	1.0201	.390	.393	.418	.380	.380	.330	.418	.380	.393	.368	.43	.368	.416	.393
63.0	42.1	46.1	35.7	-124.9	-.9062	.390	.398	.418	.389	.389	.341	.408	.379	.398	.379	.41	.389	.369	.398
64.0	38.0	40.9	33.5	157.2	1.1404	.390	.391	.432	.378	.391	.323	.405	.364	.391	.364	.43	.378	.432	.391
65.0	38.9	42.0	34.0	-41.6	-.3018	.390	.394	.419	.382	.382	.332	.406	.369	.394	.382	.43	.369	.444	.369
66.0	42.2	46.3	35.9	-122.6	-.8892	.390	.388	.407	.378	.378	.350	.407	.369	.407	.369	.41	.388	.436	.378
67.0	37.6	40.4	33.3	179.5	1.3021	.390	.416	.459	.416	.416	.360	.431	.374	.431	.374	.31	.388	.473	.218
68.0	39.6	42.9	34.4	-89.4	-.6483	.390	.376	.411	.376	.387	.340	.399	.364	.411	.364	.42	.364	.446	.411
69.0	40.1	43.6	34.7	-20.9	-.1518	.390	.383	.417	.372	.383	.338	.394	.361	.417	.372	.41	.372	.439	.406
70.0	35.5	37.5	32.4	236.3	1.7142	.390	.389	.447	.369	.389	.292	.408	.369	.427	.369	.44	.330	.447	.389
71.0	39.8	43.1	34.6	-224.0	-1.6252	.390	.381	.416	.369	.381	.334	.393	.381	.405	.381	.41	.369	.440	.405
72.0	39.9	43.3	34.7	-7.0	-.0506	.390	.387	.433	.375	.387	.328	.398	.375	.410	.375	.42	.363	.433	.387
73.0	37.6	40.3	33.4	103.2	.7485	.390	.415	.472	.400	.415	.357	.429	.415	.429	-.063	.47	.400	.501	.429
74.0	40.1	43.5	34.8	-109.8	-.7969	.390	.375	.421	.364	.387	.329	.398	.387	.409	.375	.40	.375	.444	.398
75.0	36.9	39.4	33.1	148.0	1.0736	.390	.371	.434	.355	.386	.292	.386	.386	.418	.371	.43	.371	.465	.402
76.0	39.4	42.6	34.4	-120.9	-.8768	.390	.370	.419	.370	.383	.322	.383	.370	.407	.395	.41	.383	.456	.395
77.0	38.7	41.7	34.0	30.7	.2226	.390	.362	.414	.362	.388	.310	.388	.375	.414	.388	.42	.388	.453	.401
78.0	35.9	38.0	32.5	157.9	1.1455	.390	.358	.431	.358	.394	.284	.376	.394	.413	.394	.43	.358	.468	.413
79.0	41.0	44.7	35.3	-241.3	-1.7504	.390	.370	.412	.370	.391	.327	.391	.380	.412	.391	.41	.380	.434	.402
80.0	39.1	42.2	34.2	75.2	.5454	.390	.374	.424	.374	.386	.311	.386	.386	.411	.386	.41	.374	.436	.411
81.0	37.8	40.6	33.5	58.2	.4225	.390	.372	.442	.372	.400	.315	.386	.386	.414	.400	.42	.386	.442	.329
82.0	42.2	46.3	36.0	-170.9	-1.2396	.390	.367	.416	.367	.386	.338	.377	.377	.416	.396	.40	.386	.435	.406
83.0	39.4	42.6	34.4	100.4	.7284	.390	.373	.422	.373	.385	.313	.385	.373	.422	.385	.42	.373	.422	.422
84.0	37.3	39.9	33.2	101.1	.7332	.390	.376	.436	.376	.391	.302	.391	.391	.421	.406	.43	.376	.331	.436
85.0	41.0	44.7	35.3	-159.3	-1.1560	.390	.370	.412	.370	.380	.327	.380	.391	.412	.391	.41	.380	.433	.412
86.0	39.8	43.1	34.5	46.0	.3339	.390	.374	.421	.362	.374	.316	.374	.386	.409	.397	.42	.386	.432	.421
87.0	37.8	40.6	33.5	87.3	.6334	.390	.366	.423	.352	.380	.296	.366	.394	.408	.408	.42	.380	.451	.423
88.0	40.3	43.8	34.8	-107.4	-.7792	.390	.373	.418	.362	.384	.317	.373	.395	.406	.406	.40	.384	.429	.418
89.0	40.1	43.6	34.7	6.7	.0486	.390	.381	.415	.358	.381	.324	.369	.392	.403	.392	.41	.392	.426	.426
90.0	35.3	37.3	32.3	248.6	1.8039	.390	.367	.428	.346	.387	.265	.346	.407	.407	.407	.42	.387	.468	.428
91.0	40.7	44.2	35.1	-265.6	-1.9271	.390	.376	.410	.354	.388	.321	.365	.399	.410	.399	.41	.399	.421	.421
92.0	38.2	41.0	33.7	102.8	.7460	.390	.366	.435	.352	.393	.297	.352	.407	.407	.393	.43	.393	.421	.421
93.0	35.3	37.3	32.3	172.7	1.2532	.390	.355	.455	.334	.395	.254	.355	.415	.395	.395	.43	.395	.455	.435
94.0	40.8	44.4	35.2	-271.0	-1.9661	.390	.380	.423	.358	.391	.315	.369	.402	.402	.391	.41	.402	.413	.413
95.0	37.3	39.9	33.2	153.4	1.1132	.390	.368	.428	.353	.398	.293	.368	.398	.413	.383	.44	.398	.413	.413
96.0	38.0	40.8	33.6	-37.3	-.2709	.390	.376	.432	.348	.404	.306	.376	.376	.390	.390	.43	.404	.418	.418
97.0	42.2	46.2	36.0	-162.4	-1.1783	.390	.385	.414	.375	.395	.326	.375	.395	.404	.385	.41	.395	.404	.404
98.0	38.5	41.5	33.9	138.0	1.0016	.390	.407	.460	.394	.434	.328	.394	.421	.434	.381	.42	.434	.434	.130
99.0	37.5	40.1	33.3	53.1	.3854	.390	.401	.446	.372	.416	.313	.387	.401	.401	.387	.41	.298	.416	.416
100.0	41.9	45.8	35.8	-177.9	-1.2908	.390	.388	.418	.368	.408	.328	.378	.388	.398	.378	.41	.398	.398	.408

Table 11D — Inferred Pressurant Distribution, Scaling Run 204: Test Configuration 1

INFERRED PRESSURANT DISTRIBUTION - 5 C METER CHAMBER OBSTRUCTED GAS MI

TIME (SEC)	TEMP(DEG C) MEAN	AIR	PRESSURANT	BETA	BETA/TSTAR	PRESSURANT FRACTION MEAN I = 1	2	3	4	5	6	7	8	9	10	11	12	13
COMMENCE VALVE OPENING																		
0.0	30.9	30.9	1917.0	-35.3	0.0000	0.000	0.000	0.000	0.000	0.000	0.000	0.000	0.000	0.000	0.00	0.000	0.000	
1.0	30.8	30.9	23.0	79.7	-1.4693	.014	.000	.000	.000	.000	.000	.000	-.013	.215	.000	.00	-.013	.000	-.013
VALVE FULLY OPEN																		
2.0	31.5	31.6	36.5	593.2	8.1485	-.005	-.030	-.091	-.131	-.091	.011	.011	.011	-.172	.072	.15	.072	.051	.072
3.0	33.8	33.9	32.1	102.9	4.8952	.042	-.030	.028	.957	.028	.203	-.204	.028	.319	-.088	-.14	-.204	-.326	-.030
4.0	35.3	35.3	34.3	286.2	-1.3663	.037	-.406	-.308	1.546	-.308	-.113	-.796	.277	.668	-.113	.18	-.211	-.113	.189
5.0	36.6	37.1	30.0	19.0	.4327	.059	.078	.063	.305	.063	.106	.006	.063	.177	.063	.09	-.307	.006	.049
6.0	37.4	38.1	28.8	24.5	.4884	.077	.106	.063	.224	.096	.128	.042	.053	.128	.042	.08	.031	-.011	.021
7.0	38.2	39.3	28.3	23.8	.6539	.102	.119	.101	.174	.110	.128	.101	.074	.164	.083	.11	.065	.038	.065
8.0	38.7	40.2	28.3	22.4	.4707	.121	.149	.115	.166	.115	.166	.124	.090	.183	.107	.13	.090	.065	.073
9.0	39.1	40.6	28.4	17.2	.1477	.129	.141	.125	.166	.117	.158	.133	.108	.207	.100	.14	.100	.076	.100
10.0	39.4	41.3	28.7	21.9	.4223	.145	.163	.131	.155	.131	.187	.155	.115	.235	.123	.16	.115	.100	.115
11.0	39.6	41.6	29.0	24.6	.4666	.161	.181	.141	.149	.149	.212	.173	.133	.244	.133	.18	.141	.125	.133
12.0	39.7	41.9	29.2	23.9	.3557	.174	.178	.162	.162	.154	.241	.186	.146	.273	.146	.17	.154	.139	.139
13.0	39.7	42.1	29.5	24.6	.4536	.189	.199	.175	.175	.175	.238	.207	.167	.286	.159	.19	.183	.151	.151
14.0	39.7	42.3	29.9	26.0	.6121	.208	.222	.190	.190	.190	.279	.222	.182	.319	.173	.19	.190	.173	.173
15.0	39.7	42.3	30.0	22.7	.1110	.212	.222	.189	.181	.197	.286	.230	.189	.327	.181	.21	.189	.181	.165
16.0	39.7	42.6	30.6	25.2	.7846	.236	.246	.213	.204	.221	.313	.254	.188	.363	.204	.22	.221	.204	.204
17.0	39.7	42.4	30.5	19.0	-.0747	.233	.253	.211	.203	.211	.320	.253	.203	.345	.194	.23	.211	.194	.194
18.0	39.6	42.5	31.0	26.2	.7835	.255	.269	.225	.225	.234	.347	.277	.217	.381	.217	.25	.243	.217	.217
19.0	39.6	42.5	31.0	22.0	.0288	.256	.280	.236	.219	.245	.332	.280	.219	.375	.219	.26	.236	.219	.210
20.0	39.5	42.6	31.3	25.8	.5922	.273	.294	.258	.241	.249	.365	.303	.241	.400	.232	.26	.249	.232	.223
21.0	39.5	42.5	31.3	9.6	-.0108	.272	.287	.261	.234	.261	.359	.287	.234	.394	.234	.27	.243	.234	.234
22.0	39.4	42.6	31.7	26.0	.7031	.292	.312	.275	.248	.275	.394	.330	.248	.412	.248	.29	.266	.248	.248
23.0	39.4	42.6	31.7	117.4	.0174	.292	.307	.280	.252	.280	.381	.326	.252	.408	.252	.28	.262	.252	.252
24.0	39.3	42.6	31.9	26.5	.5827	.307	.336	.298	.270	.298	.392	.345	.270	.439	.260	.29	.270	.260	.260
25.0	39.3	42.6	32.1	27.1	.3464	.316	.329	.301	.272	.301	.415	.348	.282	.444	.272	.32	.282	.272	.272
26.0	39.2	42.6	32.2	26.6	.3165	.324	.354	.315	.286	.306	.422	.354	.277	.460	.277	.31	.286	.286	.277
27.0	39.2	42.5	32.2	36.0	.0747	.326	.359	.310	.300	.310	.417	.359	.290	.456	.281	.32	.261	.271	.281
28.0	39.1	42.5	32.6	26.8	.7538	.344	.372	.342	.302	.332	.432	.372	.292	.473	.302	.35	.312	.302	.292
29.0	39.1	42.5	32.5	26.1	-.1888	.340	.367	.327	.297	.327	.427	.377	.297	.467	.297	.34	.297	.297	.287
30.0	39.0	42.4	32.7	27.7	.6542	.355	.383	.342	.311	.352	.444	.383	.321	.486	.311	.35	.311	.311	.311
31.0	39.0	42.4	32.7	30.3	.0373	.356	.382	.351	.310	.351	.444	.403	.320	.485	.299	.36	.310	.310	.299
32.0	38.9	42.4	32.9	27.5	.3897	.365	.397	.355	.324	.355	.460	.387	.324	.502	.313	.36	.324	.313	.324
COMMENCE VALVE CLOSURE																		
33.0	38.9	42.4	32.8	124.2	.0153	.365	.393	.362	.320	.362	.467	.393	.320	.498	.320	.36	.320	.309	.320
34.0	38.9	42.3	33.3	-32.4	.5974	.378	.418	.385	.329	.374	.463	.418	.318	.529	.318	.38	.329	.316	.329
VALVE FULLY CLOSED																		
35.0	38.8	42.1	33.3	-4.0	.0737	.379	.421	.375	.330	.375	.466	.409	.330	.522	.319	.38	.342	.319	.330
36.0	39.8	43.5	33.8	17.2	-.3167	.379	.403	.372	.331	.382	.475	.403	.331	.516	.341	.37	.341	.331	.331
37.0	44.1	49.0	36.1	52.2	-.9620	.379	.393	.378	.339	.378	.409	.401	.347	.502	.347	.38	.354	.347	.347
38.0	39.3	42.8	33.6	-60.2	1.1090	.379	.398	.376	.312	.376	.420	.420	.344	.538	.322	.38	.344	.355	.333
39.0	41.6	45.8	34.8	32.7	-.6033	.379	.400	.382	.327	.382	.400	.400	.364	.518	.327	.38	.354	.345	.345
40.0	38.3	41.4	33.1	-50.7	.9338	.379	.394	.383	.311	.394	.406	.418	.359	.550	.299	.38	.335	.347	.347
41.0	39.8	43.5	33.9	26.6	-.4905	.379	.410	.400	.327	.400	.400	.420	.337	.524	.327	.38	.317	.337	.337
42.0	42.0	46.2	35.0	28.9	-.5322	.379	.409	.391	.338	.382	.382	.409	.338	.507	.329	.40	.347	.356	.338
43.0	39.8	43.5	33.9	-28.9	.5322	.379	.412	.391	.339	.391	.391	.412	.339	.505	.318	.40	.339	.349	.339
44.0	37.0	39.8	32.5	-51.2	.9441	.379	.402	.402	.320	.388	.375	.416	.347	.539	.320	.40	.334	.361	.320
45.0	42.2	46.5	35.0	80.5	-1.4836	.379	.384	.392	.340	.384	.375	.401	.349	.497	.349	.39	.349	.366	.349
46.0	39.7	43.3	33.7	-33.7	.6209	.379	.380	.412	.339	.380	.370	.401	.349	.517	.328	.40	.339	.376	.339
47.0	38.8	42.1	33.3	-14.5	.2667	.379	.388	.399	.331	.376	.365	.410	.331	.523	.331	.41	.342	.376	.342
48.0	39.7	43.3	33.7	14.5	-.2667	.379	.381	.402	.339	.381	.360	.413	.339	.517	.339	.40	.339	.371	.339
49.0	41.3	45.4	34.6	22.7	-.4177	.379	.385	.395	.348	.385	.357	.404	.339	.497	.348	.40	.348	.376	.339
50.0	38.4	41.7	33.1	-43.1	.7941	.379	.397	.409	.338	.397	.350	.409	.338	.526	.327	.39	.327	.373	.338

(Table continues)

UNCLASSIFIED

Table 11D — Inferred Pressurant Distribution, Scaling Run 204: Test Configuration 1 (Continued)

INFERRED PRESSURANT DISTRIBUTION - 5 C METER CHAMBER OBSTRUCTED GAS MIXI

TIME (SEC)	TEMP(DEG C) MEAN	AIR	PRESSURANT	BETA	BETA/TSTAR	PRESSURANT FRACTION MEAN I = 1	2	3	4	5	6	7	8	9	10	11	12	13
VALVE FULLY CLOSED																		
51.0	39.8	43 5	33.8	23.4	-.4313	.379	.396	.407	.345	.386	.345	.417	.345	.500	.324	.40	334	.376	.345
52.0	38.3	41.4	33.0	-26.6	.4905	.379	.389	.401	.341	.377	.329	.413	.329	.532	.341	.41	.341	.377	.341
53.0	39.1	42.6	33.5	15.5	-.2849	.379	.385	.407	.363	.385	.341	.407	.330	.516	.330	.40	.330	.385	.341
54.0	42.7	47.2	35.3	48.1	-.8870	.379	.382	.399	.357	.382	.340	.399	.340	.492	.340	.39	.348	.391	.357
55.0	39.0	42.4	33.4	-51.0	.9397	.379	.387	.410	.343	.387	.332	.399	.332	.521	.343	.39	.343	.387	.343
56.0	37.5	40 5	32.7	-26.2	.4834	.379	.382	.408	.343	.382	.318	.408	.343	.549	.330	.42	.330	.382	.330
57.0	39.3	42.8	33.6	32.0	-.5900	.379	.391	.401	.347	.380	.336	.401	.347	.510	.347	.41	.336	.380	.336
58.0	40.2	44.0	34.0	13.6	-.2507	.379	.375	.405	.355	.385	.335	.395	.355	.506	.335	41	.335	.385	.345
59.0	39.3	42.8	33.6	-13.6	.2507	.379	.383	.405	.340	.372	.329	.394	.351	.524	.340	.41	.340	.394	.340
60.0	40.2	44.0	34.0	13.6	-.2507	.379	.377	.418	.347	.377	.327	.387	.347	.518	.337	.41	.337	.387	.347
61.0	38.8	42.1	33.3	-22.4	.4135	.379	.369	.426	.347	.369	.313	.381	.347	.528	.347	.42	347	.392	.335
62.0	42.5	46.9	35.2	51.9	-.9568	.379	.375	.409	.358	.375	.324	.383	.358	.503	.349	.40	.341	.392	.349
63.0	37.5	40.5	32.8	-73.9	1.3627	.379	.369	.421	.343	.369	.304	.395	.356	.551	.330	.42	.343	.395	.330
64.0	40.2	43.9	34.1	45.3	-.8358	.379	.373	.414	.343	.373	.312	.384	.363	.516	.353	.41	.353	.394	.333
65.0	40.2	43.9	34.1	0.0	0.0000	.379	.366	.406	.345	.366	.305	.376	.366	.528	.345	.41	.345	.406	.355
66.0	37.9	40.9	32.9	-38.4	.7085	.379	356	.418	.331	.368	.293	.381	.356	.556	.343	.41	.343	.406	.356
67.0	42.3	46.7	35.2	65.4	-1.2050	.379	.363	.407	.337	.372	.320	.372	.372	.512	.355	.39	355	.398	.363
68.0	37.4	40.2	32.7	-75.4	1.3898	.379	.348	.415	.321	.361	.295	.375	.375	.575	.335	.41	.348	.415	.349
69.0	41.8	46.0	35.0	69.4	-1.2790	.379	.363	.399	.336	.372	.317	.372	.372	.517	.363	.39	.345	.399	.372
70.0	37.5	40.4	32.8	-65.9	1.2153	.379	.347	.412	.320	.360	.294	.373	.373	.583	.347	.41	.347	.412	.347
71.0	41.6	45.7	34.9	63.8	-1.1766	.379	.353	.399	.334	.371	.316	.371	.380	.519	.353	.39	.362	.406	.371
72.0	39.0	42 3	33.5	-38.5	.7093	.379	.358	.392	.324	.358	.301	.358	.381	.562	.347	.40	.358	.415	.369
73.0	39.0	42.3	33.5	0.0	0.0000	.379	.360	.394	.337	.360	.303	.371	.371	.541	.360	.39	.360	.416	.360
74.0	39 7	43.2	33.9	11.5	-.2111	.379	.356	.399	.324	.356	.313	.367	.377	.527	.356	.39	.367	.409	.377
75.0	37.7	40.7	32.9	-34.0	.6269	.379	.357	.408	.331	.370	.293	.357	.383	.588	.357	.38	.357	.408	.331
76.0	42.3	46.6	35.3	68.7	-1.2634	.379	.358	.393	.340	.367	.314	.367	.367	.534	.367	.39	.367	.393	.367
77.0	38.3	41.4	33.1	-59.0	1.0876	.379	.355	.391	.318	.367	.282	.367	.379	.586	.367	.40	.355	.391	367
78.0	40.4	44.1	34.2	34.4	-.6333	.379	.354	.394	.334	.374	.303	.364	.364	.546	.364	.39	.364	.394	.374
79.0	39 0	42.3	33.5	-22.0	.4051	.379	.349	.395	.326	.372	.292	.372	.383	.577	.349	.40	349	.395	.361
80.0	38.1	41.1	33.1	-15.8	.2916	.379	.357	.394	.320	.369	.283	.369	.369	.580	.357	.40	.357	.394	.369
81.0	39.5	43.0	33.8	24.5	-.4508	.379	.352	.385	.330	.363	.287	.363	.385	.569	.352	.40	.363	.396	.374
82.0	36.5	39.0	32.3	-57.8	1.0660	.379	.352	.382	.308	.367	.248	.367	.382	.636	.352	.41	.352	.397	.367
83.0	40.6	44.4	34.3	72.8	-1.3413	.379	.357	.387	.328	.377	.288	.367	.377	.547	.367	.39	.367	.387	.377
84.0	38.6	41.8	33.3	-30.5	.5628	.379	.349	.384	.326	.373	.279	.361	.373	.596	.361	.40	.361	.384	.373
85.0	37.9	40.9	33.0	-13.1	.2417	.379	.360	.385	.322	.385	.271	.372	.372	.586	.360	.41	.347	.397	.360
86.0	42.2	46.4	35.2	63.4	-1.1680	.379	.360	.378	.342	.378	.306	.369	.369	.537	.360	.39	.369	.386	.378
87.0	37.7	40.7	32.9	-66.7	1.2287	.379	.368	.394	.342	.394	.291	.381	.381	.407	.368	.41	.381	.419	.381
88.0	39.7	43.2	33.9	34.0	-.6269	.379	.366	.376	.333	.376	.291	.366	.366	.569	.355	.39	.366	.398	.366
89.0	39.1	42.5	33.6	-8.5	.1567	.379	.362	.385	.340	.374	.284	.374	.362	.576	.351	.40	.351	.396	.362
90.0	37.9	40.9	33.0	-22.1	.4082	.379	.358	.384	.321	.371	.283	.358	.358	.599	.346	.40	371	.396	.371
91.0	41.6	45.7	34.9	57.1	-1.0528	.379	.392	.410	.364	.392	.327	.382	.382	.558	.373	.41	.124	.410	.401
92.0	36.7	39.2	32.4	-81.9	1.5097	.379	.368	.397	.323	.368	.264	.353	.353	.619	.338	41	.368	.397	.368
93.0	41.8	45.9	35.1	83.9	-1.5469	.379	.368	.387	.341	.368	.313	.359	.368	.534	.350	.39	.377	.387	.377
94.0	39.0	42.3	33.6	-40.7	.7495	.379	.362	.397	.328	.374	.293	.351	.374	.569	.339	.40	.374	.385	.374
95.0	38.1	41.1	33.1	-15.8	.2916	.379	.362	.387	.324	.374	.287	.349	.374	.586	.349	.41	.374	.387	.362
96.0	42.0	46.1	35.1	58.1	-1.0707	.379	.368	.386	.340	.377	.313	.359	.377	.531	.368	.40	.396	.340	.377
97.0	37.0	39.7	32.6	-78.5	1.4472	.379	.354	.396	.311	.368	.269	.340	.368	.609	.354	.42	.362	.382	.368
98.0	41.1	45.0	34.7	68.0	-1.2536	.379	.362	.381	.332	.371	.313	.352	.371	.537	.362	.40	381	.381	381
99.0	39.5	42 9	33 9	-23.1	.4256	.379	.361	.383	.339	.372	.295	.350	.372	.538	.350	.42	.383	.383	.372
100.0	37.7	40.6	33.0	-31.3	.5765	.379	.360	.399	.321	.373	.281	.347	.373	.516	.373	.43	.396	.386	.373

Table 11E — Inferred Pressurant Distribution, Scaling Run 205: Test Configuration 1

INFERRED PRESSURANT DISTRIBUTION - 5 C METER CHAMBER OBSTRUCTED GAS MI

TIME (SEC)	TEMP(DEG C) MEAN	AIR	PRESSURANT		BETA	BETA/TSTAR	PRESSURANT FRACTION MEAN I = 1	2	3	4	5	6	7	8	9	10	11	12	13
CONMENCE VALVE OPENING																			
0.0	30.0	30.0	156.0		-.6	0.0000	0.000	0.000	0.000	0.000	0.000	0.000	0.000	0.000	0.000	0.00	0.000	0.000	
1.0	30.1	30.0	21.9	19073.4	-74	.3183	-.004	-.000	-.000	-.000	-.000	-.000	-.000	.037	-.025	-.03	-.012	-.012	-.000
VALVE FULLY OPEN																			
2.0	31.2	31.2	30.3	270.8		5.1285	.015	.484	.811	1.247	.811	.484	.157	.048	-.605	-.605	-.93	-.823	-.605	-.279
3.0	33.0	33.3	22.7	-52.7		-.6002	.026	.007	.007	.177	-.012	.064	-.021	.054	-.012	.017	.01	-.002	.007	.036
4.0	34.8	35.6	20.0	17.7		.4197	.049	.044	.025	.159	.031	.076	.006	.057	.018	.050	.05	.033	.031	.050
5.0	36.0	37.3	20.2	22.7		.5488	.072	.078	.066	.166	.066	.101	.060	.066	.037	.060	.07	.055	.043	.055
6.0	37.0	38.5	21.6	15.5		.2681	.088	.092	.092	.158	.092	.116	.074	.086	.062	.074	.09	.062	.056	.089
7.0	37.7	39.4	22.3	10.2		.1131	.098	.109	.086	.150	.097	.127	.086	.091	.091	.086	.09	.080	.080	.091
8.0	38.1	40.1	24.7	25.8		.9177	.129	.142	.123	.168	.123	.174	.116	.129	.116	.116	.13	.116	.102	.116
9.0	38.5	40.7	25.0	11.4		.0854	.136	.155	.136	.155	.136	.174	.149	.111	.136	.123	.13	.117	.111	.123
10.0	38.7	41.0	25.5	21.3		.2553	.146	.173	.134	.154	.141	.199	.154	.141	.154	.128	.14	.128	.122	.123
11.0	38.9	41.5	27.0	24.2		.8830	.176	.198	.171	.184	.178	.247	.184	.164	.178	.150	.17	.157	.150	.157
12.0	39.0	41.6	27.1	21.7		.0787	.179	.205	.163	.170	.170	.253	.198	.170	.184	.156	.17	.170	.163	.163
13.0	39.0	41.8	28.0	24.5		.6894	.202	.225	.188	.188	.196	.275	.225	.181	.225	.181	.19	.181	.188	.181
14.0	39.0	41.8	28.3	25.5		.2258	.209	.230	.208	.193	.201	.297	.230	.186	.215	.186	.20	.193	.186	.186
15.0	39.0	42.0	29.0	24.4		.6275	.229	.253	.215	.208	.223	.307	.253	.215	.246	.208	.23	.208	.208	.208
16.0	39.0	42.0	28.9	18.1		-.0239	.228	.250	.227	.204	.219	.319	.258	.204	.250	.204	.22	.204	.204	.197
17.0	39.0	42.1	29.5	24.8		.5937	.247	.267	.244	.228	.244	.331	.275	.220	.275	.220	.24	.220	.220	.220
18.0	38.9	42.1	29.7	25.7		.3407	.256	.281	.249	.233	.249	.354	.281	.233	.281	.225	.24	.233	.232	.233
19.0	38.9	42.1	29.8	27.6		.0586	.258	.281	.257	.241	.257	.354	.297	.232	.281	.192	.26	.241	.232	.224
20.0	38.8	42.2	30.4	25.1		.8990	.284	.311	.285	.260	.277	.405	.302	.251	.302	.251	.28	.260	.251	.251
21.0	38.8	42.1	30.3	23.2		-.1356	.280	.304	.270	.262	.270	.389	.321	.245	.304	.245	.27	.253	.252	.245
22.0	38.7	42.2	30.8	25.3		.7810	.302	.339	.295	.277	.295	.427	.330	.269	.322	.260	.30	.269	.277	.260
23.0	38.7	42.1	30.8	21.2		-.0921	.299	.331	.296	.270	.296	.420	.331	.270	.314	.261	.29	.270	.270	.261
24.0	38.6	42.0	31.1	26.5		.6018	.315	.347	.319	.283	.310	.429	.347	.283	.347	.274	.30	.274	.292	.283
25.0	38.6	42.0	31.1	25.9		.0822	.317	.348	.321	.284	.321	.422	.348	.284	.339	.284	.32	.275	.293	.275
26.0	38.5	42.0	31.5	25.8		.7264	.336	.363	.344	.306	.334	.429	.363	.315	.363	.296	.33	.296	.315	.306
27.0	38.5	42.0	31.3	24.7		-.3178	.327	.352	.333	.305	.323	.455	.352	.295	.352	.295	.32	.296	.295	.286
28.0	38.4	42.0	31.6	26.0		.6429	.343	.372	.343	.314	.343	.459	.353	.324	.372	.305	.33	.305	.324	.314
29.0	38.4	41.9	31.6	-28.7		.0110	.343	.366	.336	.317	.336	.453	.375	.327	.366	.307	.33	.307	.327	.307
30.0	38.3	41.9	31.9	26.4		.6050	.358	.395	.355	.335	.355	.465	.385	.335	.385	.315	.35	.315	.335	.325
31.0	38.3	41.9	32.0	26.3		.3740	.367	.391	.361	.341	.361	.493	.391	.331	.401	.331	.37	.331	.341	.331
32.0	38.2	41.9	32.0	23.0		-.0391	.366	.389	.358	.348	.358	.480	.399	.338	.399	.328	.36	.328	.338	.328
CONMENCE VALVE CLOSURE																			
33.0	38.2	41.9	32.1	26.1		.3498	.375	.406	.365	.355	.375	.468	.406	.344	.406	.334	.37	.344	.344	.345
34.0	38.1	41.7	32.1	-1.9		.0073	.374	.406	.364	.344	.364	.478	.395	.354	.406	.344	.37	.344	.354	.332
VALVE FULLY CLOSED																			
35.0	38.1	41.5	32.6	-141.8		.5513	.385	.416	.382	.360	.382	.506	.428	.349	.428	.337	.38	.337	.360	.337
36.0	41.3	45.6	34.3	211.4		-.8220	.385	.403	.377	.341	.368	.492	.403	.350	.448	.350	.38	.350	.386	.350
37.0	38.3	41.7	32.7	-197.8		.7693	.385	.413	.402	.347	.402	.491	.424	.158	.458	.369	.41	.369	.391	.369
38.0	38.6	42.2	32.9	26.9		-.1047	.385	.399	.399	.324	.388	.442	.410	.367	.431	.356	.38	.356	.388	.356
39.0	39.3	43.1	33.3	50.7		-.1971	.385	.400	.390	.329	.390	.430	.410	.380	.430	.359	.39	.359	.380	.359
40.0	37.4	40.6	32.3	-149.7		.5821	.385	.398	.398	.314	.386	.434	.410	.374	.446	.362	.39	.350	.386	.350
41.0	36.0	38.7	31.6	-136.3		.5299	.385	.412	.398	.314	.398	.440	.426	.356	.440	.356	.39	.342	.364	.342
42.0	37.7	41.1	32.5	165.9		-.6453	.385	.397	.408	.327	.397	.420	.432	.350	.432	.362	.39	.350	.385	.350
43.0	38.5	42.0	32.8	56.2		-.2186	.385	.389	.411	.335	.389	.411	.422	.367	.422	.356	.40	.346	.389	.361
44.0	37.7	41.1	32.5	-56.2		.2186	.385	.399	.411	.329	.388	.399	.411	.353	.434	.364	.41	.341	.399	.361
45.0	37.0	40.1	32.1	-61.6		.2395	.385	.408	.421	.333	.396	.396	.421	.358	.433	.358	.40	.333	.396	.342
46.0	34.9	37.3	31.1	-228.6		.8891	.385	.396	.429	.315	.396	.396	.429	.348	.445	.348	.42	.331	.396	.348
47.0	37.7	41.1	32.5	287.8		-1.1191	.385	.399	.411	.341	.388	.388	.423	.364	.423	.364	.39	.353	.388	.364
48.0	38.5	42.0	32.8	56.2		-.2186	.385	.388	.399	.356	.388	.377	.410	.377	.421	.367	.39	.356	.399	.367
49.0	37.0	40.1	32.1	-117.6		.4572	.385	.387	.412	.337	.387	.374	.412	.387	.437	.362	.39	.350	.399	.362
50.0	37.6	40.8	32.4	46.8		-.1818	.385	.394	.406	.347	.382	.370	.418	.392	.430	.370	.40	.347	.394	.359

(Table Continues)

UNCLASSIFIED

Table 11E — Inferred Pressurant Distribution, Scaling Run 205: Test Configuration 1 (Continued)

INFERRED PRESSURANT DISTRIBUTION - 5 C METER CHAMBER OBSTRUCTED GAS MIXI

TIME (SEC)	TEMP(DEG C) MEAN	AIR	PRESSURANT	BETA	BETA/TSTAR	PRESSURANT FRACTION MEAN	I = 1	2	3	4	5	6	7	8	9	10	11	12	13
VALVE FULLY CLOSED																			
51.0	34.6	36.8	31.0	-319.1	1.2411	.385	.394	.412	.325	.377	.377	.412	.360	.480	.360	.41	.325	.429	.343
52.0	37.0	40.1	32.1	274.9	-1.0689	.385	.382	.407	.345	.370	.370	.395	.370	.457	.370	.40	.345	.420	.370
53.0	39.2	42.9	33.2	168.6	-.6558	.385	.376	.407	.356	.376	.366	.387	.366	.438	.366	.41	.356	.418	.376
54.0	36.2	38.9	31.7	-252.7	.9828	.385	.373	.415	.346	.373	.346	.401	.373	.457	.359	.41	.346	.443	.359
55.0	37.0	40.1	32.2	86.3	-.3356	.385	.378	.403	.341	.366	.353	.391	.378	.454	.366	.40	.353	.454	.366
56.0	34.0	36.1	30.8	-349.8	1.3603	.385	.357	.414	.319	.357	.319	.376	.414	.472	.376	.41	.338	.491	.357
57.0	37.7	41.0	32.5	406.1	-1.5793	.385	.370	.405	.346	.370	.346	.381	.393	.452	.370	.39	.346	.452	.381
58.0	33.5	35.3	30.7	-486.0	1.8901	.385	.357	.400	.291	.357	.291	.378	.400	.531	.357	.40	.335	.531	.378
59.0	39.2	42.8	33.3	575.5	-2.2382	.385	.373	.394	.341	.373	.331	.373	.394	.447	.373	.39	.352	.457	.405
60.0	33.7	35.4	30.9	-549.9	2.1383	.385	.368	.390	.280	.346	.280	.390	.434	.522	.368	.36	.346	.522	.390
61.0	37.0	39.9	32.5	403.9	-1.5706	.385	.356	.383	.329	.356	.315	.383	.410	.478	.397	.38	.356	.451	.410
62.0	38.1	41.2	33.1	90.2	-.3509	.385	.350	.375	.338	.350	.325	.375	.399	.461	.387	.39	.375	.461	.412
63.0	34.2	36.1	31.2	-407.1	1.5830	.385	.332	.373	.292	.332	.312	.352	.433	.514	.393	.41	.373	.494	.393
64.0	38.1	41.2	33.2	407.1	-1.5830	.385	.345	.382	.345	.357	.332	.370	.420	.469	.382	.39	.370	.444	.395
65.0	32.8	34.1	30.8	-627.3	2.4396	.385	.300	.392	.270	.331	.239	.331	.484	.576	.392	.42	.362	.514	.392
66.0	38.6	41.6	33.9	657.9	-2.5587	.385	.353	.379	.327	.353	.314	.366	.431	.457	.392	.40	.379	.444	.405
67.0	35.6	37.8	32.2	-271.6	1.0561	.385	.332	.385	.332	.332	.296	.367	.438	.474	.385	.40	.385	.456	.421
68.0	37.6	40.3	33.3	189.9	-.7384	.385	.349	.377	.334	.349	.306	.363	.420	.463	.392	.39	.392	.449	.420
69.0	38.1	40.9	33.6	43.6	-.1695	.385	.339	.393	.325	.353	.298	.366	.407	.475	.393	.42	.380	.448	.407
70.0	32.8	34.0	31.0	-627.3	2.4396	.385	.272	.406	.238	.305	.205	.372	.473	.607	.372	.47	.372	.540	.372
71.0	38.3	40.9	34.1	637.9	-2.4805	.385	.353	.398	.309	.353	.309	.383	.412	.486	.368	.42	.383	.442	.383
72.0	37.4	39.8	33.5	-72.6	.2825	.385	.356	.403	.324	.372	.292	.388	.419	.483	.356	.41	.372	.451	.372
73.0	36.9	39.2	33.2	-47.9	.1864	.385	.341	.408	.324	.375	.291	.375	.408	.476	.375	.42	.375	.442	.392
74.0	37.7	40.2	33.8	77.9	-.3031	.385	.355	.402	.325	.371	.294	.386	.417	.463	.371	.41	.371	.448	.386
75.0	35.3	37.2	32.3	-244.9	.9525	.385	.352	.413	.332	.352	.270	.372	.413	.475	.372	.43	.372	.475	.372
76.0	38.5	41.1	34.2	298.7	-1.1615	.385	.366	.410	.352	.366	.308	.381	.395	.453	.366	.41	.366	.438	.395
77.0	35.8	37.8	32.6	-239.6	.9318	.385	.356	.413	.318	.375	.280	.394	.413	.489	.356	.41	.356	.451	.394
78.0	36.5	38.7	33.0	74.0	-.2878	.385	.366	.401	.331	.366	.279	.384	.419	.489	.366	.40	.349	.454	.401
79.0	38.1	40.7	34.0	140.3	-.5455	.385	.359	.403	.344	.374	.299	.389	.403	.478	.374	.40	.344	.433	.403
80.0	33.9	35.3	31.5	-457.2	1.7781	.385	.330	.409	.304	.357	.224	.383	.436	.542	.357	.43	.330	.489	.409
81.0	36.5	38.6	33.1	329.7	-1.2823	.385	.355	.391	.319	.373	.282	.391	.409	.499	.373	.40	.355	.445	.409
82.0	37.4	39.7	33.7	81.9	-.3185	.385	.355	.404	.322	.388	.289	.388	.404	.486	.371	.40	.355	.437	.404
83.0	34.0	35.5	31.7	-378.8	1.4732	.385	.323	.401	.297	.375	.220	.375	.427	.530	.375	.42	.349	.504	.401
84.0	37.6	39.9	33.8	392.7	-1.5271	.385	.360	.393	.311	.376	.279	.376	.409	.490	.376	.40	.360	.456	.409
85.0	34.4	36.0	31.9	-342.9	1.3336	.385	.333	.406	.284	.381	.235	.357	.430	.552	.357	.43	.357	.479	.406
86.0	33.0	34.2	31.1	-247.9	.9642	.385	.310	.407	.278	.375	.213	.375	.407	.570	.375	.44	.343	.537	.375
87.0	38.8	41.5	34.5	638.2	-2.4817	.385	.361	.404	.318	.375	.304	.375	.418	.461	.375	.40	.375	.432	.404
88.0	36.0	38.0	32.7	-246.4	.9582	.385	.347	.423	.310	.366	.272	.366	.404	.498	.366	.42	.366	.442	.423
89.0	33.0	34.2	31.1	-432.9	1.6836	.385	.323	.452	.259	.388	.195	.355	.420	.580	.355	.45	.355	.484	.388
90.0	37.4	39.8	33.6	549.6	-2.1372	.385	.356	.405	.308	.373	.291	.356	.405	.486	.373	.40	.389	.437	.421
91.0	39.7	42.6	35.1	173.2	-.6737	.385	.356	.396	.330	.370	.303	.356	.410	.476	.370	.41	.383	.436	.410
92.0	34.4	36.0	31.9	-485.3	1.8871	.385	.336	.410	.287	.360	.262	.336	.434	.533	.336	.43	.385	.484	.410
93.0	37.4	39.7	33.7	328.7	-1.2785	.385	.345	.412	.295	.379	.295	.345	.412	.496	.362	.42	.379	.446	.412
94.0	37.7	40.1	34.0	30.1	-.1170	.385	.344	.409	.328	.376	.295	.344	.409	.490	.360	.42	.376	.441	.409
95.0	32.6	33.6	31.1	-637.5	2.4791	.385	.291	.454	.209	.372	.168	.291	.413	.659	.331	.49	.372	.577	.372
96.0	36.7	38.6	33.7	563.4	-2.1910	.385	.332	.413	.312	.373	.271	.332	.413	.514	.352	.43	.373	.454	.433
97.0	37.7	39.9	34.4	94.7	-.3681	.385	.353	.426	.316	.371	.280	.335	.407	.499	.353	.42	.371	.444	.426
98.0	34.7	36.2	32.4	-310.1	1.2059	.385	.333	.411	.280	.359	.254	.333	.437	.568	.333	.43	.359	.464	.437
99.0	34.9	36.4	32.5	23.6	-.0918	.385	.332	.434	.281	.383	.256	.332	.409	.561	.358	.43	.358	.460	.409
100.0	39.7	42.2	35.7	420.9	-1.6366	.385	.344	.405	.328	.374	.297	.359	.405	.498	.359	.40	.374	.436	.421

Table 11F — Inferred Pressurant Distribution, Scaling Run 206: Test Configuration 1

INFERRED PRESSURANT DISTRIBUTION - 5 C METER CHAMBER OBSTRUCTED GAS MI

TIME (SEC)	TEMP(DEG C) MEAN	AIR	PRESSURANT		BETA	BETA/TSTAR	PRESSURANT FRACTION MEAN I = 1	2	3	4	5	6	7	8	9	10	11	12	13
COMMENCE VALVE OPENING																			
0.0	29.3	29.3	2559.6		-124.9	0.0000	0.000	0.000	0.000	0.000	0.000	0.000	0.000	0.000	0.000	0.00	0.000	0.000	
1.0	29.5	29.4	26.7		2638.4	-131.930	-.051	-.187	-.113	-.003	-.113	-.150	-.223	-.040	-.957	.143	.65	.510	-.113	-.077
VALVE FULLY OPEN																			
2.0	31.3	31.3	22.5		174.6	8.3506	-.002	-.064	-.075	.119	-.064	-.007	-.098	.130	-.098	-.007	.00	.039	.028	.062
3.0	33 2	31.1	119.6		30.5	.8065	.024	.025	.024	.004	.027	.021	.032	.021	.039	.020	.02	.023	.027	.024
4.0	34.5	32.8	76.4		11.7	.1961	.040	.034	.041	-.002	.041	.032	.046	.034	.073	.041	.04	.043	.055	.043
5.0	35.9	34.7	54.5		14.3	.3175	.061	.054	.048	-.022	.064	.033	.069	.048	.119	.054	.03	.054	.069	.170
6.0	36.6	35.7	47.6		17.0	.2235	.074	.075	.075	-.000	.092	.050	.101	.050	.143	.075	.06	.050	.109	.067
7.0	37.2	36.7	42.5		17.3	.2539	.087	.074	.108	-.046	.159	-.011	.125	.057	.210	.091	.05	.057	.142	.108
8.0	37.6	37.6	37.9		21.4	.4214	.105	-.657	.664	-1.648	.994	-1.318	.334	-.987	2.975	.334	-.65	-.327	.994	.664
9.0	38.0	38.5	34.6		22.5	.5300	.126	.197	.094	.197	.068	.299	.120	.145	-.034	.120	.17	.171	-.009	.094
10.0	38.1	39.2	32.0		24.7	.8082	.154	.184	.142	.170	.142	.268	.170	.156	.072	.086	.18	.198	.100	.128
11.0	38.3	39.1	33.0		28.8	-.3900	.142	.172	.140	.140	.107	.254	.189	.156	.026	.091	.20	.189	.107	.075
12.0	38.4	39.7	31.4		24.0	.7026	.167	.212	.151	.175	.151	.284	.199	.103	.091	.127	.19	.175	.139	.163
13.0	38.3	40.1	30.7		24.7	.6746	.190	.206	.174	.185	.174	.280	.216	.163	.132	.153	.23	.216	.153	.174
14.0	38.4	40.3	30.6		19.9	.1234	.195	.221	.190	.190	.179	.303	.221	.200	.169	.169	.22	.241	.035	.190
15.0	38.3	40.5	30.3		25.7	.6711	.215	.236	.197	.187	.197	.296	.237	.207	.177	.197	.25	.227	.177	.207
16.0	38.4	40.7	30.3		18.4	.1090	.220	.262	.224	.204	.214	.310	.253	.195	.214	.204	.08	.243	.224	.224
17.0	38.2	40.6	30.2		28.8	.3597	.230	.252	.204	.184	.204	.310	.242	.233	.204	.204	.24	.252	.242	.213
18.0	38.4	41.0	30.3		22.8	.6109	.250	.285	.238	.228	.238	.359	.285	.266	.238	.238	.15	.238	.238	.247
19.0	38.2	40.8	30.3		12.8	-.0536	.247	.275	.228	.218	.228	.361	.266	.228	.228	.209	.26	.256	.218	.228
20.0	38.2	41.0	30.4		24.4	.6669	.267	.295	.248	.248	.248	.370	.295	.267	.257	.220	.26	.285	.220	.257
21.0	38.1	40.9	30.4		50.1	.0465	.268	.288	.240	.240	.240	.373	.306	.259	.259	.231	.27	.278	.250	.240
22.0	38.1	40.9	30.4		25.6	.1526	.272	.309	.261	.252	.252	.394	.309	.214	.233	.271	.27	.280	.242	.252
23.0	37.9	41.0	30.5		26.2	.6359	.290	.314	.266	.257	.257	.381	.324	.276	.295	.218	.31	.295	.285	.285
24.0	37.8	40.9	30.5		31.4	.1509	.293	.307	.269	.259	.269	.394	.317	.298	.259	.249	.32	.298	.288	.278
25.0	37.8	41.0	30.7		25.3	.6678	.312	.333	.304	.275	.285	.421	.324	.304	.294	.285	.31	.324	.294	.294
26.0	37.8	41.0	30.8		21.2	.0251	.312	.336	.287	.277	.287	.423	.336	.316	.297	.277	.29	.336	.297	.297
27.0	37.7	40.9	30.8		29.8	.2131	.317	.329	.300	.290	.290	.408	.329	.329	.290	.290	.32	.329	.300	.310
28 0	37.6	40.9	30.9		26.4	.4228	.328	.334	.314	.294	.304	.444	.354	.314	.314	.294	.34	.344	.314	.294
29.0	37.7	41.0	31.0		24.8	.3252	.337	.355	.325	.305	.315	.445	.365	.345	.275	.305	.35	.335	.325	.325
30.0	37.7	41.2	31.1		21.1	.1084	.340	.366	.336	.326	.326	.455	.376	.346	.336	.316	.29	.326	.286	.336
31.0	37.6	41.0	31.2		28.1	.4102	.350	.381	.330	.320	.330	.452	.371	.320	.330	.300	.36	.361	.330	.361
COMMENCE VALVE CLOSURE																			
32.0	37.5	41.0	31.2		29.7	.1271	.353	.368	.337	.327	.327	.449	.378	.357	.316	.306	.34	.388	.327	.357
33.0	37.5	40.9	31.4		-7.3	.3572	.361	.381	.339	.339	.328	.444	.381	.360	.296	.349	.37	.370	.360	.370
VALVE FULLY CLOSED																			
34.0	37.8	41.2	32.2		-9.6	.4681	.373	.442	.387	.387	.375	.509	.442	.331	.320	.264	.37	.442	.297	.275
35.0	33.4	35.4	30.2		-35.5	1.7305	.373	.425	.367	.328	.328	.580	.425	.348	.212	.406	.54	.328	.348	.212
36.0	35.9	38.6	31.3		23.4	-1.1432	.373	.380	.353	.311	.339	.477	.394	.353	.298	.380	.40	.435	.380	.339
37.0	39.2	42.9	33.1		20.7	-1.0081	.373	.382	.371	.320	.361	.422	.392	.371	.341	.341	.40	.392	.371	.382
38.0	36.6	39.5	31.7		-15.7	.7635	.373	.397	.385	.295	.385	.436	.410	.359	.346	.308	.41	.397	.359	.359
39.0	33.2	35.1	30.1		-30.3	1.4790	.373	.426	.405	.284	.385	.446	.446	.325	.305	.345	.44	.345	.345	.345
40.0	38.5	42.0	32.7		40.9	-1.9938	.373	.404	.382	.317	.371	.393	.414	.371	.350	.339	.41	.371	.360	.360
41.0	35.9	38.6	31.3		-17.0	.8312	.373	.433	.406	.323	.378	.419	.447	.351	.255	.337	.43	.406	.364	.296
42.0	37.3	40.4	32.0		9.9	-.4806	.373	.406	.394	.334	.382	.382	.418	.370	.334	.334	.40	.382	.370	.334
43.0	35.0	37.4	30.9		-17.0	.8309	.373	.423	.393	.317	.362	.378	.408	.362	.347	.332	.40	.378	.378	.362
44.0	35.0	37.4	30.9		0.0	0.0000	.373	.406	.391	.329	.360	.375	.406	.314	.360	.329	.45	.406	.375	.345
45.0	31.5	32.6	29.6		-45 3	2.2108	.373	.467	.467	.302	.401	.401	.499	.401	.203	.236	.46	.203	.434	.368
46.0	35.5	38.0	31.4		48.9	-2.3843	.373	.389	.389	.329	.359	.344	.404	.389	.329	.329	.43	.389	.389	.374
47.0	36.1	38.7	31.6		4.1	-.2021	.373	.395	.395	.352	.352	.366	.409	.381	.338	.352	.42	.338	.366	.381
48.0	34.5	36.6	30.8		-13.5	.6595	.373	.395	.378	.327	.344	.344	.413	.378	.309	.344	.44	.413	.395	.361
49.0	34.0	36.0	30.6		-5.5	.2667	.373	.384	.403	.329	.347	.366	.421	.440	.291	.366	.40	.329	.440	.329
50.0	35.5	38.0	31.4		14.8	-.7231	.373	.376	.391	.346	.346	.346	.406	.391	.346	.346	.40	.391	.391	.361

(Table Continues)

CLASSIFIED

Table 11F — Inferred Pressurant Distribution, Scaling Run 206: Test Configuration 1 (Continued)

INFERRED PRESSURANT DISTRIBUTION - 5 C METER CHAMBER OBSTRUCTED GAS MIXI

TIME (SEC)	TEMP(DEG C) MEAN	AIR	PRESSURANT	BETA	BETA/TSTAR	PRESSURANT FRACTION MEAN I = 1	2	3	4	5	6	7	8	9	10	11	12	13
VALVE FULLY CLOSED																		
51.0	35.9	38.5	31.5	2.8	-.1366	.373	.381	.366	.323	.323	.337	.381	.395	.337	.381	.43	.424	.381	.381
52.0	35.5	38.0	31.4	-2.8	.1366	.373	.380	.380	.335	.335	.335	.380	.380	.275	.350	.44	.425	.425	.410
53.0	34.5	36.6	30.8	-9.4	.4599	.373	.358	.393	.324	.324	.307	.376	.393	.358	.376	.41	.393	.444	.393
54.0	31.0	31.8	29.6	-52.2	2.5490	.373	.450	.496	.313	.359	.267	.496	.313	.633	-.692	.54	.587	.587	.496
55.0	35.4	37.5	31.7	57.9	-2.8260	.373	.349	.383	.332	.315	.298	.366	.418	.366	.349	.41	.400	.452	.400
56.0	36.4	38.9	32.3	8.2	-.3988	.373	.333	.379	.333	.318	.287	.379	.394	.394	.364	.44	.394	.424	.409
57.0	34.7	36.6	31.3	-14.4	.7019	.373	.314	.389	.314	.295	.295	.389	.445	.389	.351	.42	.407	.426	.407
58.0	33.2	34.9	30.6	-15.4	.7514	.373	.319	.389	.296	.273	.273	.366	.412	.389	.366	.45	.459	.436	.412
59.0	37.6	40.4	33.0	36.5	-1.7798	.373	.324	.378	.338	.324	.298	.378	.391	.378	.365	.41	.418	.418	.418
60.0	33.4	35.1	30.7	-34.5	1.6846	.373	.327	.373	.327	.304	.259	.373	.396	.396	.350	.44	.419	.487	.396
61.0	35.7	37.9	31.9	22.1	-1.0791	.373	.333	.383	.333	.317	.283	.383	.416	.416	.366	.45	.433	.383	.350
62.0	37.8	40.6	33.2	14.4	-.7040	.373	.345	.385	.345	.331	.304	.372	.399	.372	.372	.45	.331	.399	.440
63.0	32.9	34.3	30.5	-41.5	2.0222	.373	.289	.395	.289	.289	.209	.369	.448	.342	.316	.50	.448	.502	.448
64.0	35.2	37.2	31.8	24.6	-1.1985	.373	.324	.399	.306	.306	.268	.361	.417	.343	.343	.47	.436	.454	.417
65.0	36.1	38.3	32.3	7.1	-.3461	.373	.328	.395	.328	.311	.260	.344	.445	.361	.311	.46	.412	.445	.445
66.0	33.2	34.7	30.7	-26.8	1.3065	.373	.302	.402	.302	.252	.202	.302	.452	.377	.327	.52	.427	.502	.477
67.0	31.1	32.0	29.7	-37.0	1.8035	.373	.239	.462	.239	.239	.105	.284	.552	.284	.284	.64	.462	.596	.462
68.0	35.9	38.1	32.2	57.4	-2.7990	.373	.327	.429	.327	.344	.276	.361	.463	.226	.378	.48	.446	.480	.310
69.0	31.0	31.5	30.0	-60.8	2.9641	.373	.013	.547	.080	.080	-.053	.280	.681	.414	.280	.68	.547	.748	.547
70.0	33.4	34.5	31.6	43.2	-2.1065	.373	.239	.478	.273	.273	.171	.341	.512	.410	.376	.61	.171	.512	.478
71.0	37.3	39.1	34.3	32.6	-1.5888	.373	.302	.449	.323	.323	.260	.365	.470	.407	.386	.51	.470	.154	.428
72.0	35.0	36.4	32.7	-17.0	.8309	.373	.274	.462	.301	.301	.220	.354	.462	.381	.354	.51	.489	.515	.220
73.0	32.0	32.8	30.7	-36.1	1.7623	.373	.181	.511	.181	.228	.134	.322	.463	.322	.369	.60	.558	.511	.463
74.0	34.7	36.0	32.5	33.3	-1.6222	.373	.276	.448	.276	.304	.190	.333	.391	.362	.362	.47	.477	.477	.477
75.0	36.4	38.0	33.7	14.4	-.7019	.373	.297	.438	.297	.321	.227	.344	.438	.344	.367	.48	.438	.414	.438
76.0	37.6	39.4	34.6	8.1	-.3967	.373	.283	.408	.283	.325	.220	.346	.387	.366	.366	.47	.429	.492	.471
77.0	34.7	35.9	32.5	-22.3	1.0865	.373	.304	.448	.275	.333	.218	.362	.477	.304	.362	.44	.391	.477	.448
78.0	31.7	32.4	30.5	-39.4	1.9217	.373	.244	.460	.190	.244	.028	.352	.514	.352	.352	.56	.460	.568	.514
79.0	34.8	36.1	32.7	40.8	-1.9897	.373	.302	.446	.302	.331	.186	.360	.475	.215	.302	.56	.417	.475	.475
80.0	35.5	36.9	33.2	6.1	-.2975	.373	.334	.440	.308	.334	.228	.361	.467	.334	.361	.52	.440	.334	.387
81.0	32.5	33.4	31.1	-32.1	1.5673	.373	.310	.439	.223	.267	.137	.310	.526	.310	.353	.48	.526	.483	.483
82.0	31.5	32.1	30.4	-19.7	.9606	.373	.280	.452	.280	.338	.051	.395	.338	.280	.338	.56	.624	.510	.395
83.0	37.1	38.8	34.2	57.3	-2.7957	.373	.338	.403	.338	.360	.251	.381	.338	.229	.338	.46	.468	.468	.468
84.0	34.1	35.3	32.1	-24.1	1.1768	.373	.340	.402	.309	.340	.184	.371	.495	.371	.340	.37	.371	.464	.495
85.0	32.0	32.8	30.7	-28.4	1.3878	.373	.304	.398	.256	.304	.114	.351	.540	.398	.304	.58	.446	.493	.351
86.0	35.0	36.4	32.7	36.1	-1.7623	.373	.335	.390	.307	.362	.225	.362	.417	.390	.280	.50	.362	.417	.500
87.0	37.6	39.4	34.6	19.2	-.9348	.373	.347	.368	.305	.368	.243	.347	.452	.368	.368	.38	.431	.431	.431
88.0	34.1	35.3	32.1	-27.2	1.3292	.373	.334	.366	.303	.366	.178	.334	.491	.334	.397	.45	.397	.428	.459
89.0	32.0	32.8	30.7	-28.4	1.3878	.373	.285	.333	.237	.333	.094	.333	.523	.333	.380	.52	.571	.476	.428
90.0	32.7	33.6	31.2	11.6	-.5676	.373	.307	.348	.267	.348	.146	.307	.510	.348	.348	.46	.550	.469	.429
91.0	36.1	37.6	33.5	33.4	-1.6314	.373	.341	.365	.316	.341	.218	.341	.439	.341	.365	.43	.488	.414	.439
92.0	37.5	39.2	34.5	9.6	-.4693	.373	.365	.408	.343	.365	.257	.365	.450	.129	.343	.45	.493	.429	.450
93.0	32.7	33.6	31.2	-41.8	2.0383	.373	.314	.399	.272	.314	.102	.314	.484	.357	.314	.52	.568	.441	.441
94.0	31.3	31.9	30.3	-26.3	1.2807	.373	.296	.421	.172	.296	-.015	.296	.546	.359	.296	.54	.670	.483	.483
95.0	33.1	34.0	31.5	30.8	-1.5046	.373	.364	.443	.324	.364	.166	.364	.522	-.229	.403	.56	.601	.482	.482
96.0	36.4	37.9	33.9	31.3	-1.5265	.373	.321	.396	.296	.321	.222	.321	.470	.346	.371	.44	.470	.421	.446
97.0	34.0	35.1	32.1	-21.3	1.0412	.373	.305	.373	.271	.305	.170	.305	.475	.373	.339	.50	.508	.441	.475
98.0	33.1	34.0	31.5	-10.6	.5183	.373	.282	.440	.282	.282	.125	.321	.479	.361	.361	.51	.518	.440	.440
99.0	31.7	32.3	30.5	-23.3	1.1353	.373	.241	.462	.241	.241	.020	.296	.517	.407	.352	.51	.628	.462	.462
100.0	34.1	35.3	32.2	34.8	-1.6977	.373	.295	.426	.262	.295	.196	.327	.459	.360	.393	.49	.524	.393	.426

Table 11G — Inferred Pressurant Distribution, Scaling Run 207: Test Configuration 1

INFERRED PRESSURANT DISTRIBUTION - 5 C METER CHAMBER OBSTRUCTED GAS MI

TIME (SEC)	TEMP(DEG C) MEAN	AIR	PRESSURANT	BETA	BETA/TSTAR	PRESSURANT FRACTION MEAN I = 1	2	3	4	5	6	7	8	9	10	11	12	13
CONMENCE VALVE OPENING																		
0.0	29.0	29.0	107.6	1.0	0.0000	0.000	0.000	0.000	0.000	0.000	0.000	0.000	0.000	0.000	0.00	0.000	0.000	
1.0	29.3	29.3	27.2	1147.3	10.7415	.009	.163	.163	.163	.116	.068	.068	.068	-.266	-.170	-.17	-.075	-.075	.068
VALVE FULLY OPEN																		
2.0	30.8	30.8	28.9	62.8	1.0372	.026	.090	.143	.879	.143	.248	-.120	.090	-.541	-.173	-.17	-.173	-.120	.038
3.0	32.7	32.9	29.7	23.9	.5230	.047	.095	.095	.665	.095	.159	-.063	.032	-.285	-.063	.00	-.095	-.063	.032
4.0	34.3	34.7	28.0	7.0	.1253	.064	.097	.067	.363	.052	.112	.008	.052	-.126	.052	.06	.037	-.007	.052
5.0	35.3	36.2	26.8	24.4	.6550	.088	.139	.097	.288	.097	.139	.075	.075	-.031	.065	.08	.033	.022	.065
6.0	36.2	37.3	26.6	16.7	.2795	.104	.132	.113	.244	.113	.150	.104	.085	.010	.075	.12	.075	.047	.075
7.0	36.7	38.0	26.6	18.8	.2779	.117	.138	.112	.209	.121	.129	.112	.112	.068	.095	.13	.103	.077	.103
8.0	37.1	38.7	26.7	23.3	.5187	.136	.165	.132	.223	.140	.173	.132	.123	.090	.107	.15	.115	.098	.115
9.0	37.4	39.3	27.0	22.2	.4013	.152	.181	.148	.197	.148	.205	.157	.140	.108	.124	.17	.140	.116	.132
10.0	37.7	39.8	27.3	22.5	.4380	.168	.201	.169	.185	.169	.225	.177	.153	.129	.137	.19	.153	.137	.153
11.0	37.7	40.0	27.5	24.9	.4349	.182	.203	.187	.203	.179	.243	.195	.163	.147	.155	.19	.171	.155	.171
12.0	37.8	40.2	27.7	22.6	.2149	.190	.218	.202	.194	.186	.258	.202	.178	.162	.162	.20	.178	.154	.170
13.0	37.8	40.4	28.0	25.0	.5188	.207	.236	.212	.204	.195	.293	.228	.179	.187	.179	.22	.187	.179	.187
14.0	37.8	40.5	28.3	24.8	.4153	.220	.250	.225	.225	.217	.308	.242	.193	.193	.193	.24	.193	.184	.193
15.0	37.8	40.6	28.6	24.7	.4061	.233	.264	.239	.231	.231	.330	.256	.206	.214	.197	.24	.206	.197	.206
16.0	37.8	40.7	28.8	25.4	.3801	.244	.281	.247	.239	.247	.340	.256	.222	.222	.213	.24	.222	.222	.213
17.0	37.8	40.8	29.1	24.0	.3484	.255	.286	.261	.235	.261	.337	.278	.227	.244	.227	.26	.235	.227	.227
18.0	37.7	40.8	29.3	26.4	.4975	.269	.291	.273	.256	.265	.361	.300	.239	.256	.239	.28	.239	.247	.247
19.0	37.7	40.8	29.4	27.5	.1343	.272	.308	.273	.264	.273	.370	.290	.247	.255	.247	.28	.247	.238	.247
20.0	37.6	40.8	29.6	25.6	.3971	.283	.316	.281	.272	.281	.379	.307	.254	.272	.254	.29	.254	.263	.263
21.0	37.6	40.8	29.8	26.1	.4530	.296	.314	.287	.287	.287	.396	.323	.268	.287	.259	.31	.278	.268	.278
22.0	37.5	40.8	30.0	25.9	.2879	.304	.328	.292	.301	.292	.402	.338	.282	.292	.264	.31	.282	.273	.282
23.0	37.5	40.8	30.1	26.6	.2946	.311	.350	.303	.303	.294	.397	.331	.285	.303	.275	.33	.285	.294	.294
24.0	37.4	40.8	30.2	25.9	.2991	.319	.346	.327	.318	.308	.403	.356	.289	.299	.289	.33	.299	.280	.299
25.0	37.4	40.8	30.4	26.5	.2705	.326	.358	.320	.311	.320	.426	.349	.291	.320	.291	.34	.311	.291	.301
26.0	37.3	40.7	30.4	27.9	.2496	.332	.377	.338	.319	.328	.406	.367	.290	.328	.290	.34	.309	.309	.309
27.0	37.3	40.7	30.6	26.5	.4112	.342	.383	.343	.333	.333	.452	.363	.304	.333	.304	.35	.314	.323	.314
28.0	37.2	40.7	30.7	26.4	.3395	.351	.388	.348	.338	.348	.438	.378	.328	.338	.318	.35	.328	.328	.328
29.0	37.2	40.7	30.7	29.3	.0550	.352	.387	.357	.347	.347	457	.377	.316	.347	.316	.35	.316	.327	.327
30.0	37.2	40.7	30.9	26.5	.3515	.361	.392	.361	341	.341	.473	.392	321	.351	331	.37	.341	.331	.341
31.0	37.1	40.6	31.0	27.7	.3671	.369	.402	.371	.361	.361	.475	.392	.340	.351	.330	.38	.340	.340	.351
CONMENCE VALVE CLOSURE																		
32.0	37.1	40.6	31.0	26.6	1723	.373	.405	.384	.363	.374	.468	.405	.332	.353	.332	.39	.353	.343	.343
33.0	37.0	40.5	31.3	44.2	.4158	.382	.415	.382	.371	.382	.481	.404	.350	.371	.350	.39	.350	.360	.350
VALVE FULLY CLOSED																		
34.0	36.9	40.4	31.5	23.3	.2192	.386	.418	.384	.384	.384	.486	.407	.339	.384	.350	.40	.350	.361	.361
35.0	38.9	42.9	32.5	-57.7	-.5431	.386	.407	.378	.369	.369	.504	.398	.349	.398	.349	.39	.359	.369	.369
36.0	39.8	44.0	33.0	-22.7	-.2132	.386	.407	.380	.361	.380	.443	.416	.361	.398	.352	.40	.370	.370	.370
37.0	38.5	42.4	32.3	32.3	.3036	.386	.403	.393	.353	.373	.422	.403	.373	.403	.353	.40	.373	.383	.383
38.0	37.6	41.3	31.9	25.7	.2421	.386	.400	.390	.337	.369	.422	.400	.379	.400	.347	.40	.390	.390	.390
39.0	38.2	42.0	32.1	-15.7	-.1481	.386	.401	.401	.351	.381	.401	.401	.381	.401	.340	.40	.381	.391	.381
40.0	38.9	42.9	32.5	-19.6	-.1847	.396	.412	.392	.344	.383	.392	.402	.373	.392	.344	.42	.383	.392	.383
41.0	38.4	42.2	32.2	14.6	.1373	.386	.410	.410	.349	.390	.390	.400	.380	.390	.339	.42	.380	.380	.380
42.0	38.0	41.7	32.0	10.2	.0959	.386	.413	.413	.351	.392	.392	.413	.371	.371	.341	.42	.371	.382	.382
43.0	37.1	40.6	31.6	27.3	.2570	.386	.412	.412	.346	.390	.390	.412	.379	.368	.346	.43	.379	.379	.368
44.0	38.2	42.0	32.1	-32.5	-.3053	.386	.403	.413	.352	.393	383	.413	.383	.372	.342	.42	.372	.393	.372
45.0	36.9	40.4	31 5	38.3	.3599	386	.407	.407	.350	.395	.373	.407	.373	.373	.350	.44	.373	.395	.373
46.0	37.6	41.3	31.9	-22.6	-.2122	.386	.390	.422	.347	.390	.369	.400	.379	.379	.358	.43	.379	.390	.379
47.0	37.8	41.5	32.0	-5.4	-.0503	.386	.401	.422	.349	.391	.359	.391	.380	.370	.359	.43	.380	.401	.380
48.0	37.6	41.3	31.9	5.4	.0503	.386	.396	.417	.342	.374	.353	.396	.374	.385	.374	.43	.374	.406	.385
49.0	37.6	41.3	31.9	0.0	0.0000	.386	.387	.408	.355	.376	.355	.397	.376	.376	.376	.44	.376	.408	.387
50.0	37.5	41.0	31.8	5.5	.0514	.386	.385	.417	.353	.363	.353	.396	.374	.385	.363	.45	.374	.417	.385

(Table Continues)

UNCLASSIFIED

Table 11G — Inferred Pressurant Distribution, Scaling Run 207: Test Configuration 1 (Continued)

INFERRED PRESSURANT DISTRIBUTION - 5 C METER CHAMBER OBSTRUCTED GAS MIXI

TIME (SEC)	TEMP(DEG C) MEAN	AIR	PRESSURANT	BETA	BETA/TSTAR	PRESSURANT FRACTION MEAN I = 1	2	3	4	5	6	7	8	9	10	11	12	13
VALVE FULLY CLOSED																		
51.0	38.0	41.7	32.0	-16.1	-.1511	.386	.378	.419	.368	.368	.357	.398	.378	.378	.368	.44	.368	.409	.388
52.0	37.3	40.8	31.7	21.6	.2035	.386	.387	.420	.355	.377	.344	.398	.366	.377	.366	.45	.377	.409	.387
53.0	37.3	40.8	31.7	0.0	0.0000	.386	.378	.411	.356	.367	.334	.389	.378	.389	.378	.46	.367	.411	.389
54.0	36.9	40.4	31.5	11.5	.1084	.386	.378	.423	.367	.378	.344	.389	.367	.378	.367	.45	.367	.423	.378
55.0	38.2	42.0	32.1	-38.3	-.3599	.386	.382	.412	.362	.372	.341	.382	.382	.382	.362	.45	.372	.423	.392
56.0	36.6	39.9	31.3	50.2	.4724	.386	.375	.433	.363	.375	.328	.387	.375	.375	.352	.46	.375	.422	.387
57.0	37.3	40.8	31.7	-23.6	-.2216	.386	.382	.426	.361	.371	.339	.382	.371	.382	.350	.47	.371	.426	.382
58.0	38.2	42.0	32.1	-26.8	-.2519	.386	.372	.423	.372	.372	.341	.382	.372	.372	.362	.46	.372	.423	.392
59.0	37.1	40.6	31.6	32.5	.3053	.386	.376	.420	.364	.364	.331	.387	.376	.376	.353	.46	.376	.431	.398
60.0	36.9	40.4	31.5	5.8	.0548	.386	.365	.410	.365	.365	.320	.376	.388	.399	.365	.46	.365	.433	.399
61.0	38.2	42.0	32.1	-38.3	-.3599	.386	.370	.411	.360	.370	.340	.370	.380	.390	.360	.45	.370	.431	.411
62.0	37.3	40.8	31.7	26.8	.2519	.386	.363	.418	.363	.363	.330	.374	.385	.396	.363	.45	.363	.440	.407
63.0	36.4	39.7	31.2	29.8	.2801	.386	.352	.411	.364	.352	.316	.376	.388	.399	.376	.45	.364	.447	.411
64.0	36.6	39.9	31.3	-6.2	-.0586	.386	.367	.402	.355	.355	.320	.379	.390	.402	.367	.46	.367	.449	.402
65.0	37.3	40.8	31.7	-23.6	-.2216	.386	.361	.415	.361	.361	.328	.371	.393	.393	.361	.44	.371	.448	.404
66.0	38.0	41.7	32.0	-21.6	-.2035	.386	.358	.420	.358	.358	.327	.368	.389	.399	.358	.45	.379	.441	.410
67.0	37.5	41.0	31.8	16.1	.1511	.386	.373	.416	.362	.362	.329	.373	.383	.394	.362	.44	.373	.437	.405
68.0	36.8	40.1	31.4	23.0	.2168	.386	.365	.422	.365	.365	.319	.376	.376	.388	.365	.45	.388	.433	.399
69.0	36.8	40.1	31.4	0.0	0.0000	.386	.360	.429	.360	.372	.326	.372	.372	.395	.360	.45	.383	.429	.406
70.0	37.3	40.8	31.7	-17.5	-.1644	.386	.360	.436	.360	.371	.327	.371	.382	.382	.371	.45	.371	.425	.403
71.0	37.6	41.3	31.9	-11.0	-.1039	.386	.354	.428	.365	.375	.343	.365	.375	.396	.365	.45	.365	.418	.418
72.0	37.1	40.6	31.6	16.7	.1575	.386	.346	.424	.358	.369	.335	.369	.380	.402	.369	.45	.369	.424	.413
73.0	36.2	39.4	31.1	30.5	.2865	.386	.347	.419	.347	.371	.335	.359	.383	.407	.371	.46	.359	.431	.419
74.0	36.8	40.1	31.4	-18.7	-.1759	.386	.350	.430	.361	.373	.338	.373	.384	.395	.361	.45	.361	.430	.407
75.0	37.1	40.6	31.6	-11.8	-.1108	.386	.353	.420	.364	.376	.342	.376	.387	.398	.353	.44	.364	.431	.409
76.0	37.6	41.3	31.9	-16.7	-.1575	.386	.363	.416	.363	.374	.342	.374	.384	.395	.363	.43	.363	.437	.405
77.0	36.9	40.4	31.5	22.6	.2122	.386	.355	.412	.367	.378	.344	.378	.378	.401	.355	.43	.367	.434	.412
78.0	36.2	39.4	31.1	24.6	.2319	.386	.360	.420	.360	.384	.336	.372	.384	.408	.348	.43	.360	.432	.420
79.0	36.4	39.7	31.2	-6.4	-.0601	.386	.355	.414	.367	.378	.343	.378	.378	.402	.355	.43	.367	.426	.414
80.0	36.8	40.1	31.4	-12.3	-.1159	.386	.351	.409	.363	.374	.340	.374	.397	.409	.351	.43	.374	.432	.409
81.0	37.6	41.3	31.9	-28.5	-.2681	.386	.362	.405	.362	.373	.341	.373	.394	.405	.362	.42	.373	.426	.415
82.0	37.1	40.6	31.6	16.7	.1575	.386	.362	.406	.373	.373	.340	.373	.384	.406	.362	.41	.373	.429	.417
83.0	36.4	39.7	31.2	24.1	.2266	.386	.365	.412	.365	.365	.329	.365	.389	.412	.365	.43	.377	.424	.412
84.0	36.1	39.2	31.1	12.9	.1216	.386	.361	.410	.373	.361	.324	.361	.398	.410	.361	.43	.373	.423	.423
85.0	36.6	39.9	31.3	-19.2	-.1802	.386	.360	.406	.360	.360	.325	.360	.395	.418	.371	.44	.371	.418	.430
86.0	37.5	41.0	31.8	-29.1	-.2739	.386	.367	.410	.367	.377	.324	.356	.388	.410	.367	.43	.377	.421	.421
87.0	37.3	40.8	31.7	5.6	.0525	.386	.365	.409	.376	.376	.321	.354	.398	.409	.376	.41	.376	.419	.419
88.0	36.8	40.1	31.4	17.5	.1644	.386	.361	.407	.373	.373	.315	.350	.407	.418	.373	.43	.373	.418	.418
89.0	36.1	39.2	31.1	25.2	.2373	.386	.357	.407	.370	.370	.308	.345	.407	.419	.382	.43	.382	.419	.419
90.0	36.1	39.2	31.1	0.0	0.0000	.386	.368	.405	.368	.368	.306	.356	.405	.417	.380	.42	.380	.417	.417
91.0	36.1	39.2	31.1	0.0	0.0000	.386	.363	.412	.363	.375	.314	.363	.400	.412	.375	.43	.375	.412	.412
92.0	37.3	40.8	31.7	-42.6	-.4011	.386	.364	.408	.364	.375	.320	.364	.397	.408	.375	.43	.386	.408	.419
93.0	36.9	40.4	31.5	11.5	.1084	.386	.360	.416	.360	.371	.326	.360	.394	.416	.371	.42	.382	.416	.416
94.0	36.1	39.2	31.1	31.2	.2932	.386	.367	.416	.355	.379	.318	.355	.391	.416	.379	.42	.379	.416	.416
95.0	35.9	39.0	31.0	6.7	.0631	.386	.376	.414	.364	.389	.314	.351	.389	.414	.376	.42	.376	.414	.414
96.0	36.2	39.4	31.1	-13.2	-.1246	.386	.370	.418	.370	.382	.310	.370	.394	.406	.370	.43	.382	.406	.406
97.0	36.6	39.9	31.3	-12.6	-.1187	.386	.370	.416	.370	.381	.311	.370	.393	.405	.370	.42	.381	.416	.405
98.0	36.9	40.4	31.5	-12.0	-.1133	.386	.380	.414	.368	.391	.312	.368	.391	.402	.368	.42	.380	.414	.402
99.0	37.5	41.0	31.8	-17.1	-.1608	.386	.378	.411	.378	.400	.303	.378	.389	.400	.368	.42	.378	.411	.400
100.0	36.8	40.1	31.4	23.0	.2168	.386	.371	.417	.382	.394	.302	.382	.382	.394	.371	.42	.382	.405	.405

Table 11H — Inferred Pressurant Distribution, Scaling Run 210: Test Configuration 1

INFERRED PRESSURANT DISTRIBUTION - 5 C METER CHAMBER OBSTRUCTED GAS MI

TIME (SEC)	TEMP(DEG C) MEAN	AIR	PRESSURANT	BETA	BETA/TSTAR	PRESSURANT FRACTION MEAN I = 1	2	3	4	5	6	7	8	9	10	11	12	13
COMMENCE VALVE OPENING																		
0.0	24.8	24.8	-21121	182.8	0.0000	0.000	0.000	0.000	0.000	0.000	0.000	0.000	0.000	0.000	0.00	0.000	0.000	
1.0	24.8	24.7	16.3	9296.7	-80.8171	-.009	-.001	-.001	-.001	-.001	.010	-.013	-.013	-.013	-.013	-.01	-.013	-.013	-.025
VALVE FULLY OPEN																		
2.0	25.2	25.2	243.1	612.1	5.4584	.000	.000	-.001	-.002	-.001	.000	.001	-.002	.003	.002	.00	.001	-.001	-.000
3.0	27.2	27.1	28.8	53.1	1.1327	.021	-.159	-.159	-.977	-.159	-.392	.134	-.100	.718	.368	.25	.251	.251	.251
4.0	29.0	29.2	25.7	27.3	.6901	.046	.061	.120	.616	.061	.266	-.055	.061	-.289	-.026	.06	-.114	-.143	-.026
5.0	30.3	30.5	25.3	-50.8	-.3230	.052	.037	.037	.343	.018	.114	-.039	.114	-.135	.037	.11	.018	-.001	.018
6.0	31.2	32.0	23.2	30.6	1.1904	.088	.094	.094	.254	.094	.151	.071	.094	-.032	.060	.11	.048	.025	.071
7.0	32.0	33.2	23.2	23.9	.6652	.113	.122	.111	.232	.101	.172	.091	.122	.031	.081	.13	.091	.081	.101
8.0	32.6	33.9	23.3	10.4	.0910	.121	.143	.124	.190	.105	.171	.114	.114	.067	.114	.14	.105	.086	.095
9.0	33.0	34.5	23.5	19.8	.2736	.133	.164	.127	.191	.127	.182	.136	.136	.063	.127	.15	.127	.091	.100
10.0	33.3	35.0	23.7	23.2	.4684	.150	.171	.144	.179	.135	.197	.162	.162	.100	.144	.17	.135	.117	.135
11.0	33.5	35.4	23.9	22.9	.3730	.164	.184	.158	.175	.158	.210	.184	.167	.123	.149	.19	.149	.140	.140
12.0	33.6	35.6	24.1	23.8	.3353	.176	.196	.169	.187	.169	.222	.187	.178	.152	.152	.19	.169	.152	.152
13.0	33.7	35.9	24.5	24.3	.5878	.195	.224	.189	.189	.189	.277	.215	.198	.163	.180	.20	.172	.163	.172
14.0	34.9	37.2	24.7	49.5	-.5914	.186	.306	.267	.259	.267	.354	.298	.267	-.212	.227	-.10	-.013	.259	.243
15.0	34.7	37.4	25.0	23.0	.8617	.216	.310	.294	.286	.286	.375	.326	-.119	.253	.262	.29	.278	-.200	.156
16.0	34.1	36.7	24.9	300.3	.1724	.216	.263	.237	.221	.237	.331	.271	.195	.221	.212	.24	-.059	.221	.212
17.0	33.7	36.5	25.4	26.7	1.0580	.246	.282	.246	.219	.237	.345	.291	.237	.210	.210	.26	.228	.228	.210
18.0	33.8	36.5	25.3	25.5	-.1240	.243	.288	.252	.226	.243	.333	.279	.226	.208	.208	.25	.217	.226	.199
19.0	33.9	36.9	25.8	22.3	.5943	.263	.325	.289	.271	.289	.388	.334	.172	.235	.262	.14	.262	.244	.199
20.0	33.7	36.6	25.8	34.0	.2057	.267	.311	.283	.265	.265	.394	.330	.071	.265	.247	.28	.247	.265	.247
21.0	33.6	36.5	25.9	28.2	.2347	.273	.308	.289	.270	.280	.373	.336	.177	.261	.242	.29	.214	.261	.242
22.0	33.6	36.7	26.3	24.7	.8044	.297	.341	.312	.302	.302	.418	.351	.293	.283	.283	.33	.264	.302	.072
23.0	33.4	36.4	26.2	7.0	-.0225	.294	.330	.291	271	.291	.408	.330	.271	.261	.252	.31	.271	.281	.261
24.0	33.3	36.4	26.4	26.2	.5397	.309	.338	.308	.288	.298	.418	.358	.278	.288	.278	.32	.278	.288	.268
25.0	33.3	36.4	26.3	23.7	-.1619	.304	.339	.299	.289	.289	.399	.349	.279	.279	.269	.30	.279	.289	.279
26.0	33.5	36.7	26.7	23.3	.6147	.322	.384	.334	.324	.334	.434	.384	.324	.324	.304	.35	.294	.273	.123
27.0	33.2	36.4	26.7	32.6	.3503	.329	.354	.344	.323	.313	.437	.375	.313	.302	.282	.34	.292	.313	.292
28.0	33.1	36.3	26.7	32.4	.0859	.331	.360	.339	.318	.318	.454	.381	.308	.297	.287	.35	.297	.306	.287
29.0	33.1	36.3	27.0	26.4	.7214	.349	.383	.351	.319	.340	.448	.383	.329	.329	.308	.37	.329	.329	.319
30.0	33.1	36.3	27.0	17.3	-.0094	.349	.392	.349	.327	.338	.456	.392	.317	.327	.306	.37	.327	.327	.306
31.0	33.0	36.3	27.2	25.9	.4589	.360	.414	.370	.338	.359	.458	.403	.338	.338	.316	.37	.338	.327	.316
32.0	33.0	36.3	27.3	27.0	.3960	.370	.418	.374	.352	.374	.485	.429	.352	.252	.340	.38	.340	.363	.340
COMMENCE VALVE CLOSURE																		
33.0	32.9	36.2	27.2	24.3	-.2347	.363	.406	.362	.351	.362	.484	.406	.328	.340	.328	.37	.340	.340	.306
34.0	32.9	36.1	27.6	-67.4	.5833	.376	.417	.382	.370	.370	.499	.429	.370	.311	.323	.38	.335	.356	.346
VALVE FULLY CLOSED																		
35.0	32.8	35.9	27.8	-34.4	.2982	.382	.430	.381	.369	.381	.517	.430	.332	.381	.344	.36	.332	.381	.319
36.0	32.2	35.1	27.5	-25.8	.2232	.382	.419	.380	.354	.367	.512	.419	.367	.367	.314	.40	.367	.367	.327
37.0	33.4	36.6	28.1	43.7	-.3780	.382	.418	.395	.347	.383	.465	.430	.347	.371	.336	.40	.359	.359	.347
38.0	33.0	36.2	27.9	-11.8	.1025	.382	.420	.396	.347	.408	.457	.432	.360	.347	.323	.39	.360	.372	.347
39.0	28.7	30.5	25.8	-204.6	1.7705	.382	.797	.776	.669	.776	.819	.797	.690	.347	-.809	-.65	-.595	.733	.626
40.0	33.4	36.6	28.2	214.8	-1.8595	.382	.434	.434	.374	.422	.446	.446	.374	.350	.326	.41	.362	.374	.218
41.0	29.0	30.9	26.0	-193.6	1.6756	.382	.423	.423	.321	.402	.423	.423	.362	.362	.341	.44	.341	.382	.321
42.0	29.2	31.1	26.1	11.4	-.0988	.382	.428	.447	.348	.408	.428	.447	.348	.348	.309	.40	.348	.388	.309
43.0	32.8	35.8	28.0	167.1	-1.4463	.382	.450	.463	.386	.424	.437	.463	.411	.399	.373	.41	-.074	.424	.399
44.0	30.6	33.0	26.8	-93.2	.8065	.382	.530	.546	.449	.498	.514	.546	.482	-.296	.433	-.15	.465	.498	.449
45.0	29.0	30.9	26.0	-88.7	.7679	.382	.432	.493	.371	.412	412	.472	.412	.371	.331	.47	.371	.412	.006
46.0	27.7	29.1	25.4	-111.1	.9614	.382	.430	.537	.322	.403	.376	.483	.349	.322	.268	.45	.349	.376	.295
47.0	28.2	29.8	25.6	47.3	-.4097	.382	.483	.555	.387	.459	.411	.555	.411	.364	.387	.50	-.378	.459	.364
48.0	33.5	36.8	28.3	253.6	-2.1954	.382	.398	.434	.351	.386	.363	.434	.375	.363	.339	.43	.363	.375	.351
49.0	31.8	34.6	27.3	-63.1	.5458	.382	.410	.465	.354	.396	.354	.437	.354	.313	.340	.45	.340	.396	.354
50.0	31.1	33.7	27.0	-29.8	.2577	.382	.413	.458	.353	.398	.338	.428	.368	.338	.338	.45	.338	.383	.353

(Table Continues)

UNCLASSIFIED

Table 11H — Inferred Pressurant Distribution, Scaling Run 210: Test Configuration 1 (Continued)

INFERRED PRESSURANT DISTRIBUTION - 5 C METER CHAMBER OBSTRUCTED GAS MIXI

TIME (SEC)	TEMP(DEG C) MEAN	AIR	PRESSURANT	BETA	BETA/TSTAR	PRESSURANT FRACTION MEAN I = 1	2	3	4	5	6	7	8	9	10	11	12	13
VALVE FULLY CLOSED																		
51.0	28.0	29.5	25.5	-187.0	1.6186	.382	.471	.395	.422	.447	.372	.521	.422	.372	.298	.47	-.246	.471	.348
52.0	33.2	36.4	28.1	256.4	-2.2188	.382	.399	.459	.375	.399	.350	.435	.362	.326	.290	.45	.350	.411	.350
53.0	31.8	34.6	27.3	-51.6	.4464	.382	.403	.472	.376	.403	.362	.458	.307	.334	.293	.47	.321	.417	.348
54.0	30.6	33.0	26.7	-54.2	.4692	.382	.387	.481	.387	.403	.355	.450	.340	.292	.324	.46	.340	.418	.324
55.0	32.7	35.7	27.8	87.1	-.7537	.382	.400	.451	.375	.400	.350	.426	.350	.337	.325	.46	.325	.426	.337
56.0	30.9	33.5	26.9	-70.8	.6127	.382	.437	.512	.406	.452	.376	.467	.255	.301	.285	.45	.285	.391	.346
57.0	30.4	32.8	26.6	-25.3	.2187	.382	.430	.511	.398	.430	.382	.462	.318	.350	.221	.47	.253	.414	.318
58.0	32.5	35.5	27.7	89.3	-.7732	.382	.411	.488	.398	.411	.372	.449	.321	.321	.295	.44	.295	.411	.346
59.0	30.6	33.0	26.7	-80.8	.6997	.382	.432	.510	.400	.432	.384	.463	.306	.258	.321	.47	.274	.369	.337
60.0	33.5	36.8	28.3	116.1	-1.0047	.382	.409	.468	.386	.409	.374	.432	.327	.339	.304	.45	.304	.409	.350
61.0	28.5	30.2	25.8	-230.7	1.9972	.382	.417	.531	.417	.440	.371	.485	.280	.303	.235	.48	.235	.485	.280
62.0	32.7	35.6	28.0	205.1	-1.7751	.382	.410	.463	.397	.410	.397	.436	.345	.318	.279	.45	.305	.423	.331
63.0	28.2	29.7	25.7	-228.9	1.9817	.382	.460	.561	.460	.460	.409	.536	.232	.283	.257	.51	.181	.333	.283
64.0	34.7	38.1	29.3	282.9	-2.4484	.382	.388	.433	.377	.388	.366	.422	.343	.354	.343	.46	.332	.411	.343
65.0	31.6	34.2	27.5	-106.5	.9221	.382	.393	.497	.408	.423	.393	.452	.349	.275	.290	.43	.305	.423	.319
66.0	31.5	34.0	27.4	-7.3	.0636	.382	.483	.558	.498	.498	.468	.513	.407	.362	-.555	.46	.392	.483	.392
67.0	32.0	34.7	27.6	21.5	-.1861	.382	.436	.521	.450	.450	.421	.464	.364	.179	.236	.33	.293	.450	.364
68.0	29.2	31.1	26.2	-136.7	1.1834	.382	.426	.507	.405	.405	.365	.466	.283	.283	.283	.50	.324	.446	.263
69.0	33.9	37.1	28.7	198.4	-1.7175	.382	.441	.477	.417	.429	.405	.453	.309	.261	.273	.38	.297	.441	.381
70.0	30.3	32.4	26.7	-143.4	1.2411	.382	.445	.497	.428	.428	.393	.462	.340	.306	.236	.37	.323	.393	.340
71.0	32.2	34.9	27.8	85.2	-.7372	.382	.419	.461	.419	.419	.377	.447	.391	.363	.236	.34	.320	.447	.320
72.0	31.8	34.4	27.6	-13.8	.1196	.382	.422	.480	.422	.422	.393	.451	.350	.320	.350	.36	.248	.379	.364
73.0	27.8	29.2	25.6	-226.7	1.9624	.382	.435	.547	.435	.463	.380	.491	.269	.185	.185	.49	.213	.491	.380
74.0	33.0	35.9	28.3	264.2	-2.2865	.382	.399	.439	.412	.399	.373	.412	.373	.294	.346	.38	.346	.452	.333
75.0	27.0	27.8	25.7	-333.6	2.8876	.382	.473	.662	.520	.520	.378	.614	.189	.190	.426	.42	-.047	.378	.237
76.0	32.3	34.4	29.0	316.4	-2.7384	.382	.382	.456	.400	.400	.345	.437	.400	.382	.235	.43	.345	.474	.271
77.0	30.6	32.3	27.8	-74.4	.6443	.382	.394	.483	.438	.438	.372	.461	.394	.305	.327	.37	.238	.438	.305
78.0	31.5	33.4	28.4	39.8	-.3444	.382	.379	.439	.399	.399	.318	.419	.379	.298	.399	.37	.218	.500	.439
79.0	30.8	32.5	27.9	-31.4	.2718	.382	.466	.531	.509	.487	.422	.509	.313	.422	.183	.50	.292	.596	-.275
80.0	32.0	34.0	28.7	52.8	-.4569	.382	.344	.401	.363	.363	.306	.401	.401	.401	.382	.40	.363	.458	.382
81.0	27.8	28.9	26.2	-232.6	2.0133	.382	.316	.428	.353	.316	.204	.391	.428	.353	.353	.46	.428	.577	.353
82.0	30.6	32.2	27.9	179.1	-1.5503	.382	.346	.416	.369	.346	.276	.393	.416	.369	.346	.41	.393	.486	.393
83.0	34.4	36.8	30.6	141.8	-1.2277	.382	.343	.392	.360	.343	.295	.376	.408	.408	.376	.42	.360	.456	.424
84.0	29.6	31.0	27.3	-193.5	1.6746	.382	.338	.420	.365	.365	.256	.392	.420	.283	.392	.42	.392	.529	.392
85.0	29.7	31.2	27.4	10.2	-.0883	.382	.341	.421	.368	.341	.234	.368	.421	.421	.341	.42	.421	.474	.394
86.0	32.0	33.9	28.9	106.4	-.9207	.382	.369	.430	.369	.369	.288	.410	.349	.410	.390	.45	.410	.268	.451
87.0	29.6	31.0	27.3	-116.2	1.0057	.382	.336	.418	.390	.363	.253	.390	.418	.418	.363	.44	.390	.445	.336
88.0	31.5	33.2	28.6	95.4	-.8258	.382	.339	.404	.360	.382	.274	.404	.404	.404	.339	.42	.339	.468	.425
89.0	31.3	33.0	28.5	-7.5	.0653	.382	.399	.465	.421	.421	.311	.443	.421	.421	.377	.42	.399	.070	.399
90.0	33.9	36.1	30.3	95.6	-.8278	.382	.348	.399	.365	.365	.279	.382	.416	.416	.365	.41	.382	.434	.399
91.0	29.9	31.4	27.6	-160.8	1.3922	.382	.358	.463	.384	.384	.279	.410	.410	.384	.305	.38	.384	.410	.410
92.0	32.3	34.2	29.2	109.9	-.9511	.382	.348	.448	.368	.388	.289	.388	.368	.408	.348	.38	.388	.448	.388
93.0	29.6	30.9	27.3	-129.1	1.1173	.382	.346	.485	.373	.401	.262	.401	.401	.346	.346	.42	.373	.457	.346
94.0	30.3	31.8	27.8	38.8	-.3356	.382	.343	.444	.343	.394	.242	.394	.394	.419	.343	.41	.368	.469	.394
95.0	31.8	33.6	28.9	71.6	-.6198	.382	.359	.444	.380	.401	.296	.401	.380	.380	.338	.44	.317	.465	.359
96.0	30.3	31.8	27.8	-71.6	.6198	.382	.345	.421	.345	.370	.244	.370	.370	.446	.370	.44	.370	.471	.396
97.0	30.6	32.2	28.0	17.6	-.1524	.382	.376	.425	.352	.401	.256	.376	.449	.304	.328	.37	.401	.473	.449
98.0	30.6	32.2	28.0	0.0	0.0000	.382	.371	.443	.347	.395	.250	.395	.371	.443	.371	.41	.347	.467	.347
99.0	30.9	32.6	28.3	16.6	-.1437	.382	.361	.430	.361	.384	.268	.384	.407	.407	.314	.43	.361	.453	.407
100.0	30.9	32.6	28.3	0.0	0.0000	.382	.361	.453	.361	.407	.268	.384	.384	.384	.337	.40	.361	.453	.407

Table 11I — Inferred Pressurant Distribution, Scaling Run 211: Test Configuration 1

INFERRED PRESSURANT DISTRIBUTION - 5 C METER CHAMBER OBSTRUCTED GAS MI

TIME (SEC)	TEMP(DEG C) MEAN	AIR	PRESSURANT		BETA	BETA/TSTAR	PRESSURANT FRACTION MEAN I = 1	2	3	4	5	6	7	8	9	10	11	12	13
CONMENCE VALVE OPENING																			
0.0	27.1	27.1	46.3		2.1	0.0000	0.000	0.000	0.000	0.000	0.000	0.000	0.000	0.000	0.000	0.00	0.000	0.000	
1.0	29.0	29.1	27.0		193.7	8.7962	.044	-.254	-.302	.409	-.302	.030	-.397	.125	.125	.219	.26	.125	.219	.314
VALVE FULLY OPEN																			
2.0	30.9	31.1	27.5		-234.3	-1.2107	.049	-.110	-.110	.360	-.166	.000	-.249	.083	.083	.194	.25	.139	.056	.111
3.0	32.1	32.6	26.5		26.4	.5675	.070	.009	-.024	.273	-.041	.075	-.041	.042	.091	.108	.19	.108	.075	.042
4.0	33.3	33.9	26.3		16.3	.2887	.086	.029	-.010	.198	-.010	.094	.003	.094	.107	.133	.18	.120	.068	.107
5.0	34.1	35.2	26.4		29.7	1.2450	.123	.056	.022	.170	.022	.124	.045	.113	.181	.181	.21	.181	.136	.158
6.0	34.6	35.7	26.5		63.1	-.3555	.118	.074	.031	.128	.042	.128	.064	.085	.172	.183	.21	.172	.118	.128
7.0	35.0	36.4	26.6		23.2	.4155	.134	.096	.055	.117	.055	.148	.096	.127	.189	.189	.23	.178	.137	.127
8.0	35.2	36.8	26.8		26.6	.5499	.152	.115	.074	.115	.085	.185	.105	.145	.215	.185	.24	.195	.155	.155
9.0	35.5	37.2	27.1		25.7	.5975	.171	.147	.107	.117	.097	.187	.147	.157	.246	.207	.25	.207	.177	.177
10.0	35.6	37.4	27.2		14.9	.0495	.174	.154	.105	.115	.115	.204	.164	.154	.233	.194	.26	.213	.174	.174
11.0	35.7	37.7	27.7		26.9	.8805	.201	.176	.136	.126	.136	.246	.186	.176	.276	.226	.27	.236	.206	.206
12.0	35.7	37.8	28.0		27.3	.6158	.218	.193	.152	.142	.162	.254	.213	.183	.304	.243	.29	.264	.223	.213
13.0	35.6	37.8	28.0		29.2	.0643	.220	.183	.152	.132	.152	.264	.213	.172	.315	.244	.31	.264	.234	.223
14.0	35.6	37.9	28.2		27.3	.4480	.233	.214	.162	.152	.162	.286	.224	.204	.327	.255	.30	.255	.234	.245
15.0	35.6	37.9	28.2		117.7	.0117	.233	.211	.159	.149	.169	.293	.231	.180	.314	.252	.32	.273	.252	.221
16.0	35.6	38.0	28.6		27.2	.8525	.257	.231	.189	.168	.189	.284	.253	.221	.348	.284	.34	.295	.274	.253
17.0	35.5	38.0	28.8		27.6	.5087	.270	.240	.197	.186	.197	.327	.262	.197	.370	.305	.35	.316	.284	.273
18.0	35.5	38.0	28.8		31.2	.1747	.274	.247	.203	.181	.203	.323	.257	.236	.367	.301	.36	.312	.290	.279
19.0	35.4	38.0	29.0		27.7	.3874	.284	.254	.209	.187	.220	.342	.276	.243	.387	.309	.37	.320	.309	.265
20.0	35.5	38.1	29.0		44.0	-.0712	.283	.274	.219	.197	.230	.351	.285	.054	.395	.340	.39	.351	.307	.285
21.0	35.3	38.0	29.2		29.4	.8817	.304	.268	.222	.200	.222	.360	.303	.257	.429	.337	.39	.348	.314	.303
22.0	35.2	38.0	29.4		28.3	.5445	.318	.286	.239	.204	.239	.380	.310	.263	.427	.345	.42	.356	.333	.321
23.0	35.2	37.9	29.4		25.3	-.1092	.315	.280	.233	.209	.233	.373	.315	.268	.420	.350	.42	.361	.326	.303
24.0	35.2	37.9	29.5		28.5	.4851	.326	.297	.249	.214	.249	.380	.321	.273	.440	.356	.42	.368	.345	.321
25.0	35.1	37.9	29.6		28.9	.4148	.336	.300	.263	.227	.263	.384	.336	.288	.445	.372	.43	.372	.348	.336
26.0	35.0	37.8	29.6		32.4	.2688	.341	.315	.266	.229	.266	.376	.327	.303	.450	.376	.43	.389	.364	.339
27.0	35.0	37.8	29.8		29.3	.4108	.351	.318	.255	.243	.268	.418	.343	.305	.480	.380	.44	.380	.368	.355
28.0	34.9	37.7	29.7		27.2	-.2427	.345	.321	.271	.234	.283	.395	.333	.283	.458	.383	.44	.383	.371	.321
29.0	34.9	37.7	29.9		28.8	.7435	.361	.332	.281	.255	.281	.421	.345	.319	.472	.396	.47	.396	.370	.357
30.0	34.8	37.7	29.9		30.2	.2697	.367	.331	.280	.241	.293	.422	.331	.331	.486	.409	.48	.409	.383	.370
CONMENCE VALVE CLOSURE																			
31.0	18.4	27.1	19.2		31.7	1.4726	1.097	3.487	3.449	3.436	3.462	3.411	3.487	-.960	-.846	-.935	-.87	-.935	-.947	-.973
32.0	26.5	27.1	19.2		38.1	1.7688	.073	1.238	1.200	1.188	1.213	1.263	1.251	-1.011	-.834	-.910	-.84	-.910	-.935	-.960
VALVE FULLY CLOSED																			
33.0	34.6	34.0	35.6		-151.2	-7.0254	.381	.615	.859	.981	.798	-.055	.493	.615	-.238	.189	-.17	.189	.311	.372
34.0	36.4	35.7	37.6		-11.3	-.5238	.381	.526	.735	.997	.683	.264	.421	.578	-.207	.212	-.15	.212	.317	.369
35.0	31.8	31.4	32.5		35.2	1.6363	.381	.660	.925	1.366	.836	.218	.571	.660	-.489	.129	-.48	.041	.129	.395
36.0	35.9	35.2	37.0		-32.4	-1.5043	.381	.544	.712	1.046	.600	.377	.432	.600	-.182	.209	-.18	.153	.265	.377
37.0	31.3	30.9	31.9		38.1	1.7700	.381	.611	.909	1.507	.810	.412	.412	.909	-.584	.013	-.68	.013	.113	.511
38.0	36.4	35.7	37.5		-40.8	-1.8967	.381	.528	.693	1.021	.638	.419	.419	.583	-.129	.200	-.23	.254	.200	.364
39.0	32.5	32.1	33.3		28.4	1.3181	.381	.684	.848	1.423	.766	.602	.438	.602	-.384	.027	-.54	.027	.109	.356
40.0	34.3	33.7	35.2		-15.1	-.6998	.381	.664	.664	1.066	.731	.597	.463	.597	-.206	.062	-.34	.128	.195	.329
41.0	35.9	35.2	36.9		-10.7	-.4975	.381	.559	.675	1.023	.675	.617	.385	.617	-.136	.096	-.19	.096	.154	.385
42.0	33.8	33.2	34.6		14.8	.6861	.381	.637	.779	1.062	.850	.779	.354	.637	-.284	.070	-.35	-.001	.070	.354
43.0	33.0	32.6	33.9		6.0	.2799	.381	.617	.694	1.078	.848	.771	.464	.694	-.305	.003	-.45	.080	.080	.387
44.0	37.6	36.9	38.9		-29.9	-1.3911	.381	.609	.660	.861	.710	.660	.509	.509	-.045	.156	-.19	.106	.106	.307
45.0	35.0	34.4	36.0		15.5	.7180	.381	.658	.658	.969	.783	.721	.472	.596	-.150	.036	-.33	.099	.099	.347
46.0	33.4	32.9	34.2		12.0	.5594	.381	.724	.651	1.017	.871	.871	.505	.651	-.227	-.008	-.52	.066	-.008	.358
47.0	37.6	36.9	38.9		-27.1	-1.2572	.381	.686	.535	.886	.736	.736	.485	.585	-.117	.134	-.26	.184	.084	.284
48.0	32.3	31.9	33.1		36.1	1.6769	.381	.786	.613	1.217	.958	1.045	.527	.699	-.422	-.077	-.76	.096	-.077	.354
49.0	34.6	34.1	35.6		-19.3	-.8972	.381	.763	.631	1.028	.896	.996	.432	.631	-.231	-.032	-.56	.167	.034	.299
50.0	37.4	36.7	38.6		-17.0	-.7886	.381	.648	.543	.910	.753	.805	.490	.595	-.088	.070	-.29	.175	.070	.280

(Table Continues)

UNCLASSIFIED

Table 11I — Inferred Pressurant Distribution, Scaling Run 211: Test Configuration 1 (Continued)

INFERRED PRESSURANT DISTRIBUTION - 5 C METER CHAMBER OBSTRUCTED GAS MIXI

TIME (SEC)	TEMP(DEG C) MEAN	AIR	PRESSURANT	BETA	BETA/TSTAR	PRESSURANT FRACTION MEAN	I = 1	2	3	4	5	6	7	8	9	10	11	12	13
VALVE FULLY CLOSED																			
51.0	33.4	32.9	34.2	26.2	1.2176	.381	.721	.645	1.102	.873	1.026	.492	.645	-.270	-.041	-.57	.111	-.041	.264
52.0	34.3	33.7	35.2	-7.0	-.3270	.381	.776	.637	.983	.845	.983	.498	.568	-.195	-.056	-.47	.152	-.056	.290
53.0	35.7	35.1	36.7	-9.6	-.4472	.381	.723	.540	.905	.784	.905	.540	.601	-.190	.053	-.43	.175	-.008	.357
54.0	34.1	33.6	35.0	10.9	.5088	.381	.766	.555	1.049	.908	.978	.555	.625	-.222	.060	-.64	.060	-.081	.343
55.0	33.2	32.7	34.0	7.2	.3358	.381	.872	.560	1.105	.949	1.027	.560	.638	-.295	.016	-.76	.094	-.062	.249
56.0	32.5	32.1	33.2	6.6	.3056	.381	.891	.551	1.146	.976	1.061	.636	.636	-.299	.041	-.89	.126	-.214	.296
57.0	31.1	30.8	31.7	16.1	.7484	.381	1.097	.674	1.414	1.097	1.203	.674	.674	-.595	-.172	-1.23	.145	-.384	.356
58.0	34.6	34.1	35.6	-32.9	-1.5279	.381	.881	.616	1.014	.815	.947	.549	.549	-.180	.019	-.64	.218	-.048	.218
59.0	36.6	35.9	37.7	-12.3	-.5702	.381	.757	.532	.925	.757	.869	.532	.532	-.086	.139	-.42	.195	-.030	.251
60.0	36.0	35.4	37.1	3.1	.1436	.381	.732	.557	.908	.732	.908	.557	.557	-.146	.147	-.49	.264	-.029	.264
61.0	34.3	33.7	35.2	11.8	.5468	.381	.835	.560	1.041	.835	.973	.629	.560	-.264	.080	-.60	.217	-.126	.217
62.0	31.8	31.4	32.5	22.3	1.0378	.381	1.051	.583	1.238	1.051	1.238	.770	.676	-.541	.021	-1.00	.021	-.354	.208
63.0	33.0	32.6	33.8	-12.5	-.5790	.381	.923	.527	1.081	.923	1.081	.685	.606	-.344	-.027	-.73	.131	-.185	.290
64.0	34.6	34.1	35.6	-12.7	-.5886	.381	.812	.545	1.012	.879	.945	.679	.545	-.322	.078	-.58	.212	-.055	.212
65.0	31.8	31.4	32.5	24.8	1.1519	.381	1.020	.548	1.303	1.114	1.114	.737	.642	-.585	-.018	-.96	.076	-.207	.170
66.0	34.6	34.1	35.6	-24.8	-1.1519	.381	.824	.556	.958	.824	.958	.623	.556	-.315	.154	-.51	.221	-.114	.221
67.0	33.4	32.9	34.2	9.6	.4462	.381	.926	.621	1.079	.850	.926	.698	.469	-.370	.164	-.59	.164	-.141	.164
68.0	32.9	32.4	33.6	4.7	.2191	.381	1.006	.681	1.087	.924	1.006	.762	.437	-.456	.112	-.61	.112	-.294	.193
69.0	31.1	30.8	31.7	19.4	.9017	.381	1.155	.731	1.367	1.049	1.261	.837	.413	-.646	-.010	-.96	-.010	-.434	.202
70.0	36.7	36.0	37.9	-44.5	-2.0659	.381	.805	.641	.915	.751	.805	.641	.423	-.233	.150	-.28	.204	-.069	.204
71.0	33.6	33.1	34.4	21.2	.9842	.381	.911	.691	1.057	.911	.984	.764	.471	-.408	.031	-.48	.105	-.262	.178
72.0	32.7	32.2	33.5	7.9	.3652	.381	1.007	.763	1.170	.926	1.089	.845	.519	-.622	.030	-.54	-.052	-.296	.111
73.0	34.8	34.2	35.8	-17.1	-.7952	.381	.843	.649	1.036	.778	.972	.778	.455	-.383	.068	-.31	.068	-.125	.133
74.0	32.5	32.1	33.3	18.8	.8731	.381	1.030	.779	1.280	.946	1.197	.863	.362	-.557	-.056	-.55	-.056	-.306	.028
75.0	33.0	32.6	33.8	-5.0	-.2327	.381	1.024	.711	1.180	.946	1.180	.867	.321	-.538	.008	-.46	-.070	-.226	.008
76.0	32.0	31.6	32.7	10.5	.4882	.381	1.149	.789	1.239	1.059	1.329	.879	.339	-.650	-.110	-.56	-.110	-.380	-.020
77.0	36.9	36.2	38.1	-36.1	-1.6777	.381	.809	.595	.916	.755	.916	.702	.381	-.261	.113	-.15	.113	-.047	.113
78.0	32.3	31.9	33.1	32.7	1.5214	.381	1.093	.660	1.266	1.006	1.352	.920	.314	-.724	-.032	-.46	-.118	-.378	.055
79.0	33.4	32.9	34.2	-9.9	-.4583	.381	1.045	.666	1.121	.969	1.197	.818	.288	-.546	.060	-.31	-.091	-.243	-.015
80.0	33.6	33.1	34.4	-1.5	-.0690	.381	1.061	.615	1.135	.986	1.209	.838	.318	-.573	.021	-.35	-.053	-.276	.021
81.0	32.7	32.2	33.4	7.9	.3652	.381	1.086	.673	1.251	1.086	1.333	.921	.260	-.648	.013	-.40	-.152	-.400	-.070
82.0	37.1	36.4	38.2	-30.4	-1.4133	.381	.848	.579	.955	.794	1.009	.740	.311	-.334	.150	-.11	.042	-.119	.096
83.0	32.3	31.9	33.0	33.6	1.5616	.381	1.080	.727	1.256	1.080	1.433	.903	.286	-.772	-.067	-.33	-.243	-.331	-.067
84.0	33.9	33.4	34.8	-14.1	-.6574	.381	.969	.678	1.115	.969	1.260	.824	.314	-.560	.022	-.34	-.123	-.196	.022
85.0	32.3	31.9	33.0	14.1	.6574	.381	1.107	.754	1.284	1.019	1.372	.931	.313	-.746	-.040	-.48	-.216	-.305	-.040
86.0	33.9	33.4	34.8	-14.1	-.6574	.381	1.020	.656	1.093	.874	1.166	.874	.291	-.583	.073	-.29	-.073	-.146	-.000
87.0	33.8	33.2	34.6	1.4	.0654	.381	1.026	.655	1.026	.878	1.175	.878	.358	-.533	.061	-.31	-.087	-.162	-.013
88.0	30.8	30.4	31.3	31.3	1.4543	.381	1.323	.856	1.440	1.090	1.673	1.206	.390	-1.127	-.193	-.89	-.310	-.427	-.077
89.0	34.5	33.9	35.3	-36.2	-1.6814	.381	.963	.616	1.032	.824	1.171	.894	.338	-.495	.061	-.35	-.078	-.078	.061
90.0	33.2	32.7	34.0	9.9	.4578	.381	1.046	.649	1.125	.887	1.283	.887	.332	-.619	.015	-.46	-.064	-.144	.015
91.0	34.5	33.9	35.3	-9.9	-.4578	.381	.931	.653	1.070	.792	1.139	.792	.376	-.457	.029	-.38	-.041	-.041	.098
92.0	33.0	32.6	33.8	11.4	.5302	.381	1.023	.699	1.184	.861	1.266	.861	.375	-.516	-.030	-.51	-.111	-.192	.051
93.0	32.9	32.4	33.6	1.6	.0752	.381	1.068	.655	1.151	.903	1.234	.903	.324	-.587	-.007	-.50	-.090	-.090	-.007
94.0	36.9	36.2	38.0	-28.0	-1.3002	.381	.850	.570	.906	.738	.961	.738	.346	-.324	.123	-.21	.067	.067	.123
95.0	32.2	31.8	32.8	34.4	1.5986	.381	1.162	.790	1.255	.976	1.349	.976	.324	-.701	-.142	-.60	-.235	-.142	-.049
96.0	35.5	34.9	36.5	-26.7	-1.2427	.381	.889	.633	1.018	.761	1.018	.761	.376	-.330	.055	-.33	-.073	.055	.119
97.0	32.0	31.6	32.6	28.5	1.3254	.381	1.078	.789	1.369	.982	1.368	.982	.403	-.754	-.175	-.65	-.272	-.175	.017
98.0	33.9	33.4	34.7	-17.8	-.8277	.381	.928	.701	1.155	.852	1.155	.852	.398	-.434	-.056	-.51	-.131	-.056	.096
99.0	32.7	32.3	33.4	10.7	.4968	.381	1.033	.771	1.208	.858	1.295	.858	.421	-.540	-.103	-.62	-.191	-.103	.072
100.0	33.4	32.9	34.2	-6.4	-.2965	.381	.924	.764	1.165	.844	1.245	.844	.362	-.520	-.039	-.52	-.119	-.039	.041

XXX

Table 12 — Mean Values of All Quantities, Test Configuration 1

MEAN VALUES OF ALL QUANTITIES

TIME SEC	TMP,C INIT	THP,C	TMP,C	BETA	BETA/ THETA	X BAR	MEAN PRESSURANT FRACTIONS AT LOCATIONS I 1	2	3	4	5	6	7	8	9	10	11	12	13	TAU
0.0	29.2	29.2	287.5	2.5	0.0000	0.000	0.000	0.000	0.000	0.000	0.000	0.000	0.000	0.000	0.000	0.000	0.00	0.000	0.000	0.00
2.1	31.4	31.0	49.5	245.4	1.2406	.019	.016	.039	.308	.034	.080	-.072	.060	-.090	-.031	-.064	-.06	-.043	.071	.05
2.9	32.6	32.3	43.1	56.5	2.4176	.038	.003	.006	.362	-.001	.099	-.078	.058	-.034	.024	.029	-.01	-.021	.067	.10
3.9	34.3	34.3	34.8	2.0	.5181	.057	.050	.040	.272	.032	.088	-.008	.065	-.003	.056	.083	-.00	.013	.059	.15
4.9	35.4	35.7	32.4	35.3	.4389	.076	.081	.065	.196	.066	.105	.052	.070	.036	.059	.096	.05	.041	.060	.20
6.0	36.3	37.0	30.2	21.1	.5303	.095	.068	.108	.091	.128	.055	.092	.045	.191	.102	.082	.05	.106	.113	.25
6.9	36.8	37.8	29.4	21.9	.6416	.114	.054	.139	.024	.163	.023	.114	.027	.326	.126	.092	.07	.165	.156	.30
8.1	37.4	38.7	29.0	22.2	.5145	.133	.257	.140	.326	.136	.287	.148	.076	-.025	.126	.206	.08	-.083	.050	.35
9.4	37.8	39.4	28.9	23.5	.5159	.152	.183	.145	.190	.140	.233	.164	.139	.108	.132	.188	.14	.102	.111	.40
10.7	38.0	39.9	29.0	27.8	.4535	.171	.196	.160	.177	.158	.237	.189	.147	.156	.150	.200	.16	.138	.151	.45
12.1	38.1	40.2	29.1	24.0	.4388	.190	.212	.180	.183	.179	.267	.212	.170	.186	.164	.212	.18	.159	.168	.50
13.5	38.3	40.6	29.4	29.9	.5057	.209	.238	.208	.199	.205	.300	.242	.165	.208	.196	.222	.20	.149	.186	.55
15.3	38.1	40.7	29.6	45.3	.4102	.228	.251	.217	.204	.217	.314	.255	.204	.242	.205	.238	.20	.209	.210	.60
16.8	38.1	40.8	29.9	31.0	.5293	.247	.270	.232	.215	.233	.337	.273	.224	.260	.225	.260	23	.227	.223	.65
18.7	38.0	40.9	30.2	24.7	.4042	.266	.292	.257	.241	.256	.364	.298	.228	281	.242	.271	.26	.238	.236	.70
21.0	37.9	40.9	30.5	22.0	.3792	.285	.311	.277	.257	.275	.387	.321	.230	.302	.264	.311	.26	.264	.250	.75
22.7	37.7	40.8	30.7	24.8	.4941	.304	.328	.291	.273	.287	.405	.338	.274	.320	.278	.314	.28	283	.278	.80
25.3	37.6	40.8	31.0	27.8	.3217	.323	350	.312	.292	.308	.418	.356	.295	.342	.300	.348	.30	.296	.280	.85
27.8	37.5	40.7	31.3	26.6	.3567	.342	.369	.335	.311	.329	.444	.373	.304	.357	.309	.363	.32	.321	.314	.90
30.6	37.4	40.7	31.5	25.5	.3728	.361	.390	.355	.334	.348	.462	.394	.329	.380	.328	.380	.34	.328	.324	.95
33.4	37.3	40.6	32.0	20.2	.3945	.381	.421	.383	.364	.382	.488	.428	.342	.394	.333	.380	.35	.347	.326	1.00
38.3	36.9	40.0	31.9	2.7	.2191	.385	.424	.411	.344	.401	.444	438	.342	377	.339	.409	.35	.360	.356	1.05
42.8	36.0	38.9	31.5	-34.6	.5106	.387	.427	.425	.357	.407	.417	.439	.332	.392	.332	.425	.35	.375	.346	1.10
47.3	36.7	39.7	31.9	95.8	-.1122	.389	.429	.441	.373	.414	.400	.450	.367	.315	.355	.369	.36	.414	.366	1.15
51.7	35.7	38.4	31.5	-8.2	.1842	.391	.432	.463	.380	.414	.384	.460	.322	.421	.271	.437	.31	.420	.369	1.20
56.2	36.7	39.6	32.2	-116.2	-.3592	.393	.417	.460	.381	.412	.365	.444	.362	.377	.364	.442	.33	.388	.363	1.25
60.7	35.8	38.5	31.7	-12.4	.2848	.395	.416	.482	.388	.419	.358	.452	.339	.374	.341	.457	.33	.420	.358	1.30
65.1	35.8	38.5	31.9	29.5	.2463	.397	.398	.513	.389	.416	.348	.453	.367	.362	.327	.472	.32	.425	.371	1.35
69.6	36.2	38.9	32.2	-60.9	-.3689	.399	.434	.525	.417	.453	.371	.469	.330	.365	.346	.446	.29	.381	.359	1.40
62.2	31.7	34.1	28.2	85.0	.1704	.359	.369	.509	.381	.414	.284	.443	.289	.282	.274	.499	.25	.334	.327	1.45
65.8	31.6	34.1	28.2	-57.1	.2290	.361	.391	.500	.391	.438	.335	.445	.311	.256	.236	.426	.28	.365	.312	1.50
46.0	23.0	24.6	20.8	-13.2	-.0012	.279	.278	.432	.262	.338	.192	.345	.216	.213	.193	.391	.18	.303	.274	1.55
48.2	22.5	24.1	20.3	70.2	.1717	.281	.240	.465	.224	.361	.005	.328	.256	.216	.196	.485	.18	.394	.297	1.60
50.3	22.8	24.4	20.8	-58.2	-.0752	.283	.308	.422	.301	.366	.201	.363	.212	.236	183	.331	.18	.312	.255	1.65
40.9	19.2	20.7	17.4	-54.9	-.0916	.244	.462	.302	.501	.335	.621	.381	.103	.116	.194	-.005	.17	-.004	-.015	1.70
42.4	18.6	20.0	17.0	-103.7	-.0451	.246	1.508	-.127	1.094	.267	3.550	.277	.094	-.242	.500	-1.543	.09	-1.133	-1.144	1.75
44.0	17.9	19.2	16.4	79.8	.6446	.248	2.198	-5.773	4.184	-1.795	14.149	.201	-.004	-1.983	9.974	-9.962	1.99	-7.960	-1.998	1.80
34.3	14.7	16.2	13.1	-12.2	.1197	.207	.320	.336	.313	.323	.295	.324	.105	.121	.102	.128	.10	.115	.103	1.85
24.2	11.4	12.7	10.1	-5.1	-.1167	.166	.290	.294	.283	.290	.277	.293	.057	.073	.056	.073	.05	.059	.057	1.90
13.7	6.2	7.0	5.8	-9.4	.2103	.125	256	.266	.251	.258	.247	.262	.007	.017	.007	024	.01	.017	.003	1.95
14.1	6.2	7.1	5.8	-4.4	.1704	.127	.205	.268	.257	.264	.254	.268	000	.023	.006	.022	.00	.015	.004	2.00
14.4	6.3	7.1	5.8	5.2	.0905	.129	.276	.279	.268	.275	.265	.278	.001	.015	-.004	.016	.00	.009	.002	2.05
3.4	2.8	3.5	2.6	3.5	.1093	.089	.245	.240	.237	.241	.244	.245	-.048	-.034	-.043	-.036	-.04	-.045	-.047	2.10
3.4	2.7	3.5	2.6	3.5	.1128	.091	.254	.249	.247	.251	.253	.254	-.052	-.038	-.047	-.039	-.04	-.049	-.051	2.15
3.4	2.7	3.4	2.6	3.5	.1162	.093	.263	.258	.256	.260	.261	.263	-.056	-.042	-.051	-.043	-.05	-.053	-.055	2.20
3.4	2.6	3.4	2.5	3.5	.1197	.095	.272	.268	.265	.269	.270	.272	-.060	-.045	-.055	-.047	-.05	-.057	-.059	2.25
3.4	2.6	3.4	2.5	3.5	.1232	.097	.281	.277	.274	.278	.279	.281	-.063	-.049	-.059	-.051	-.05	-.061	-.063	2.30
3.4	2.5	3.3	2.5	3.5	.1267	.099	.291	.286	.284	.287	.287	.291	-.067	-.053	-.063	-.055	-.06	-.064	-.067	2.35
3.4	2.5	3.3	2.4	3.5	.1302	.102	.300	.295	.293	.297	.296	.300	-.071	-.057	-.067	-.059	-.06	-.068	-.071	2.40
3.4	2.5	3.3	2.4	3.5	.1337	.104	309	.304	.302	.306	.305	.309	-.075	-.061	-.070	-.063	-.07	-.072	- 075	2.45

UNCLASSIFIED

Table 13 — Normalized Mean Local Pressurant Fractions, Test Configuration 1

NORMALIZED MEAN LOCAL PRESSURANT FRACTIONS

LOCATIONS I

1	2	3	4	5	6	7	8	9	10	11	12	13	TAU
0.000	0.000	0.000	0.000	0.000	0.000	0.000	0.000	0.000	0.000	0.000	0.000	0.000	0.00
.041	.102	.795	.088	.207	-.185	.154	-.234	-.081	-.165	-.155	-.110	.184	.05
.008	.016	.937	-.004	.256	-.201	.149	-.089	.061	.072	-.049	-.054	.174	.10
.130	.103	.703	.084	.227	-.021	.169	-.008	.144	.215	-.012	.032	.152	.15
.209	.167	.506	.171	.270	.133	.182	.092	.177	.248	.139	.105	.155	.20
.175	.279	.234	.330	.142	.238	.117	.494	.263	.211	.143	.274	.293	.25
.141	.359	.061	.421	.059	.294	.071	.843	.325	.237	.194	.428	.403	.30
.665	.361	.842	.352	.741	.382	.196	-.064	.326	.532	.226	-.214	.128	.35
.473	.375	.492	.361	.602	.424	.359	.280	.341	.487	.369	.263	.288	.40
.508	.415	.458	.408	.613	.489	.379	.404	.389	.517	.433	.356	.391	.45
.547	.465	.473	.462	.690	.547	.441	.481	.423	.547	.475	.410	.434	.50
.615	.537	.513	.530	.776	.625	.428	.537	.507	.573	.523	.383	.485	.55
.649	.562	.528	.562	.811	.659	.527	.626	.531	.615	.521	.540	.543	.60
.698	.601	.555	.603	.872	.706	.579	.673	.582	.672	.613	.587	.576	.65
.754	.664	.624	.661	.941	.771	.589	.726	.627	.700	.675	.615	.610	.70
.803	.716	.664	.711	1.000	.829	.594	.780	.683	.804	.678	.682	.645	.75
.847	.753	.706	.742	1.047	.873	.709	.828	.718	.813	.747	.732	.720	.80
.904	.807	.755	.795	1.080	.920	.763	.883	.777	.899	.799	.765	.724	.85
.951	.866	.805	.850	1.147	.964	.786	.922	.800	.938	.841	.831	.812	.90
1.008	.918	.863	.900	1.193	1.020	.850	.983	.847	.984	.897	.849	.838	.95
1.088	.991	.940	.987	1.263	1.106	.885	1.018	.860	.982	.924	.896	.847	1.00
1.097	1.063	.889	1.037	1.147	1.134	.885	.975	.876	1.059	.913	.930	.921	1.05
1.104	1.098	.923	1.052	1.077	1.135	.859	1.012	.859	1.099	.918	.970	.893	1.10
1.109	1.140	.964	1.071	1.035	1.165	.949	.814	.919	.955	.935	1.070	.947	1.15
1.118	1.196	.983	1.072	.992	1.188	.833	1.087	.700	1.129	.801	1.085	.955	1.20
1.078	1.190	.985	1.065	.943	1.149	.935	.976	.941	1.142	.866	1.002	.938	1.25
1.077	1.247	1.003	1.082	.926	1.167	.877	.967	.881	1.180	.864	1.086	.925	1.30
1.028	1.327	1.006	1.074	.901	1.172	.949	.937	.845	1.221	.837	1.098	.958	1.35
1.123	1.358	1.077	1.172	.960	1.212	.852	.945	.894	1.152	.769	.985	.929	1.40
.953	1.317	.986	1.072	.733	1.144	.746	.730	.708	1.291	.670	.864	.845	1.45
1.011	1.292	1.011	1.132	.866	1.150	.804	.663	.610	1.103	.740	.943	.806	1.50
.720	1.117	.677	.873	.496	.892	.558	.550	.500	1.011	.480	.784	.709	1.55
.620	1.202	.580	.934	.012	.847	.661	.560	.506	1.255	.472	1.020	.767	1.60
.795	1.092	.777	.947	.520	.938	.548	.611	.474	.856	.487	.807	.659	1.65
1.196	.782	1.296	.865	1.606	.986	.266	.300	.501	-.012	.454	-.010	-.038	1.70
3.898	-.329	2.828	.691	9.178	.716	.243	-.625	1.292	-3.990	.247	-2.930	-2.957	1.75
5.683	-14.931	0.819	-4.641	36.582	.519	-.011	-5.126	25.787	-25.76	5.147	-20.58	-5.166	1.80
.827	.868	.810	.835	.764	.837	.270	.312	.263	.331	.275	.297	.267	1.85
.750	.761	.732	.749	.716	.758	.147	.188	.144	.188	.153	.153	.148	1.90
.661	.688	.649	.668	.639	.677	.019	.043	.018	.061	.026	.045	.007	1.95
.685	.694	.665	.683	.656	.692	.001	.061	.015	.057	.015	.038	.011	2.00
.713	.720	.693	.711	.685	.720	.001	.039	-.011	.042	.002	.024	.004	2.05
.633	.621	.614	.624	.631	.633	-.125	-.087	-.111	-.092	-.111	-.117	-.123	2.10
.657	.644	.638	.648	.653	.657	-.135	-.097	-.122	-.102	-.122	-.127	-.133	2.15
.680	.668	.662	.672	.675	.680	-.144	-.107	-.132	-.112	-.132	-.136	-.143	2.20
.704	.692	.686	.695	.698	.704	-.154	-.117	-.142	-.122	-.142	-.147	-.153	2.25
.728	.716	.710	.719	.720	.728	-.164	-.127	-.152	-.132	-.152	-.157	-.163	2.30
.751	.739	.733	.743	.743	.751	-.173	-.137	-.162	-.143	-.162	-.167	-.173	2.35
.775	.763	.758	.767	.765	.775	-.183	-.147	-.172	-.153	-.172	-.176	-.183	2.40
.799	.787	.781	.791	.787	.799	-.193	-.157	-.182	-.163	-.182	-.186	-.193	2.45

Table 14 — Standard Deviation of Mean Local Pressurant Fractions, Test Configuration 1

STANDARD DEVIATION OF MEAN LOCAL PRESSURANT FRACTIONS

LOCATIONS I

1	2	3	4	5	6	7	8	9	10	11	12	13	TAU
0.000	0.000	0.000	0.000	0.000	0.000	0.000	0.000	0.000	0.000	0.000	0.000	0.000	0.00
.336	.504	1.493	.499	.525	.478	.247	.947	.502	.595	.517	.430	328	.05
.227	.260	.856	.257	.217	.320	.091	.562	.231	272	.224	.323	.199	.10
.135	.130	.464	.148	.125	.184	.062	363	.107	.161	.291	.126	.099	.15
.080	.086	.319	.091	.095	.087	.045	.238	.055	.092	.075	.133	.060	.20
.239	.195	.673	.306	.480	.115	.324	.914	.091	.260	.150	.323	.184	.25
.408	.321	1.008	.490	.754	.152	.589	1.534	.141	447	.232	.483	.307	.30
.762	.167	1.042	172	.732	.150	.321	.935	.063	.308	.335	1.238	.467	.35
.107	.086	.158	.058	.187	.071	.047	.247	.070	.085	.092	.115	.170	.40
.068	.055	.069	.056	.087	.054	.054	.151	.065	.062	.048	.065	.050	.45
.051	.061	.062	.052	.069	.047	.029	.130	.066	.065	.058	.052	042	50
.079	.091	.091	.084	.088	.080	.155	.154	.070	.077	.059	.202	.039	.55
.049	.062	.064	.059	.042	.043	.024	.134	.052	.104	.160	.040	.035	.60
.047	.058	.053	.054	.053	.034	.040	.132	.046	.096	.052	.042	030	.65
.057	.069	.062	.066	.057	.050	.068	.136	.069	.128	.053	.046	.048	.70
.043	.061	.066	.056	.036	.052	.140	.141	.073	.082	.118	.048	.075	.75
.059	.068	.080	.064	.049	.050	.031	.155	.063	.103	.063	.041	.043	.80
.061	.066	.080	.064	.039	.051	.045	.148	.055	.079	.067	.048	.130	.85
.057	.070	.082	.066	.066	.055	.057	.156	.076	.074	.064	.047	.052	.90
.064	.077	.086	.068	.053	064	.039	.149	.073	.095	.069	.061	074	.95
.044	.052	.078	.047	.037	.061	.070	.167	095	.178	.102	.068	.115	1.00
.062	.031	.071	.050	.118	.064	.086	.192	.070	.076	.061	.072	.061	1.05
.124	.078	.110	.110	.206	.113	.099	177	.058	.058	.065	.099	.081	1.10
.221	.174	.199	.196	.326	.208	.180	.491	.096	.409	.112	.179	.148	1.15
.281	.220	.243	.262	.386	.268	.286	.208	.701	.140	.531	.219	.179	1.20
.361	.279	.321	.332	.482	.333	.217	.198	.206	.242	.193	.198	.194	1.25
.434	.352	.390	.402	.568	.404	.234	.261	.174	.338	.182	.278	.216	1.30
.576	.409	.487	.513	.671	.488	.352	.354	.197	.391	.213	.349	.279	1.35
.571	.505	.515	.522	.688	.547	.290	.304	.254	.343	.371	.284	.281	1.40
.823	.769	.687	.698	1.053	.722	.412	.439	.342	1.098	.406	.439	.484	1 45
.839	.775	.750	.757	.942	.781	.468	.508	509	.725	381	541	.440	1 50
1.100	1.055	1.043	.952	1.363	.980	.554	.463	.525	1.256	.531	.807	.784	1.55
1.344	1.166	1.294	1.008	2.545	1.070	.712	.659	.480	1.976	.582	1.434	.915	1.60
1.175	1.077	1.124	1.074	1.479	1.113	.603	.613	.492	.977	.561	.995	.770	1.65
1.521	1.212	1.701	1.170	2.528	1.234	.530	.486	.677	1.221	.655	1.254	1.230	1.70
8.661	3.726	5.721	1.32223	.715	1.348	.597	2.840	2.78712	.422	.562	9.441	9.308	1 75
13.59344	.90728	.15715	.744101	.13	1.711	1.08615	.45372	.02873	.92313	.67859	.31015	.561	1.80
1.412	1.384	1.357	1.389	1 421	1.413	.583	.531	.529	.566	.546	.591	.568	1.85
1.499	1.468	1.444	1.475	1.503	1.500	.539	.485	.484	.495	.498	.517	.528	1.90
1.579	1.554	1.525	1.557	1.581	1.582	.448	.344	.385	.407	.403	.470	.409	1 95
1.645	1.614	1.590	1.622	1.644	1.646	.450	.430	.420	.437	.420	.498	.459	2.00
1.712	1.680	1.657	1.688	1.707	1.713	.492	.418	.408	.441	.435	.504	.487	2.05
1.790	1.755	1.736	1.766	1.784	1.790	.353	.247	.315	.260	.315	.330	.347	2.10
1.857	1.823	1.804	1.833	1.847	1.857	.381	.275	.344	.288	.344	.358	.375	2.15
1.924	1.890	1.871	1.901	1.910	1.924	.408	.304	.373	.318	.373	.386	.404	2.20
1.991	1.957	1.940	1.967	1.974	1.991	.436	.332	.401	.346	.401	.414	.432	2.25
2.058	2.024	2.007	2.035	2.037	2.058	.463	.360	.430	.375	.430	.443	.461	2 30
2.125	2.091	2.074	2.102	2 100	2.125	.490	.388	.458	.404	.458	.471	.489	2.35
2.192	2 158	2.143	2.169	2.164	2 192	518	.417	.487	.432	.487	.499	.518	2.40
2.259	2.226	2.210	2.236	2.227	2.259	.545	.445	.515	.462	.515	.527	.546	2.45

UNCLASSIFIED

Table 15 — Deviations of Mean Local Pressurant Fractions, Test Configuration 1

DEVIATIONS OF MEAN LOCAL PRESSURANT FRACTIONS

LOCATIONS I

1	2	3	4	5	6	7	8	9	10	11	12	13	TAU
0.000	0.000	0.000	0.000	0.000	0.000	0.000	0.000	0.000	0.000	0.000	0.000	0.000	0.00
-.009	.053	.746	.038	.158	-.234	.105	-.283	-.130	-.214	-.204	-.159	.134	.05
-.090	-.083	.838	-.102	.157	-.300	.050	-.187	-.038	-.027	-.148	-.153	.076	.10
-.018	-.044	.556	-.064	.079	-.169	.021	-.155	-.004	.068	-.160	-.115	.004	.15
.012	-.030	.309	-.026	.074	-.063	-.015	-.105	-.020	.051	-.058	-.091	-.042	.20
-.071	.033	-.012	.084	-.104	-.008	-.128	.248	.017	-.035	-.103	.028	.047	.25
-.154	.064	-.234	.126	-.236	-.001	-.224	.548	.030	-.058	-.101	.133	.108	.30
.320	.016	.498	.007	.397	.038	-.149	-.408	-.018	.188	-.118	-.558	-.216	.35
.079	-.019	.099	-.032	.208	.030	-.034	-.113	-.052	.093	-.024	-.130	-.106	.40
.065	-.028	.016	-.035	.170	.046	-.063	-.038	-.054	.074	-.010	-.087	-.052	.45
.055	-.028	-.019	-.030	.198	.055	-.051	-.011	-.069	.055	-.017	-.082	-.058	.50
.074	-.004	-.028	-.011	.235	.084	-.113	-.004	-.034	.032	-.018	-.158	-.056	.55
.059	-.029	-.063	-.028	.220	.069	-.064	.035	-.060	.024	-.070	-.050	-.048	.60
.058	-.038	-.084	-.036	.232	.067	-.061	.034	-.057	.032	-.026	-.053	-.064	.65
.065	-.024	-.065	-.028	.253	.082	-.100	.037	-.062	.011	-.014	-.074	-.079	.70
.066	-.021	-.073	-.026	.263	.092	-.143	.043	-.055	.066	-.059	-.055	-.092	.75
.060	-.034	-.082	-.045	.260	.086	-.078	.041	-.070	.026	-.041	-.055	-.068	.80
.068	-.029	-.081	-.041	.244	.084	-.074	.047	-.059	.062	-.037	-.071	-.112	.85
.066	-.020	-.080	-.035	.261	.078	-.099	.037	-.086	.052	-.044	-.055	-.074	.90
.074	-.017	-.071	-.034	.259	.085	-.084	.048	-.088	.049	-.037	-.086	-.097	.95
.104	.007	-.044	.003	.279	.122	-.099	.034	-.124	-.002	-.060	-.088	-.137	1.00
.102	.069	-.105	.043	.153	.139	-.109	-.020	-.118	.064	-.081	-.064	-.074	1.05
.104	.098	-.077	.052	.077	.135	-.141	.012	-.141	.099	-.082	-.030	-.107	1.10
.103	.134	-.042	.065	.029	.159	-.057	-.192	-.086	-.051	-.070	.065	-.058	1.15
.107	.185	-.028	.061	-.019	.178	-.178	.076	-.311	.118	-.209	.074	-.056	1.20
.062	.174	-.031	.049	-.074	.132	-.081	-.041	-.075	.126	-.150	-.014	-.078	1.25
.055	.226	-.019	.060	-.096	.146	-.144	-.055	-.141	.159	-.158	.064	-.097	1.30
.001	.300	-.021	.047	-.127	.145	-.078	-.090	-.182	.194	-.190	.071	-.069	1.35
.090	.325	.044	.139	-.073	.179	-.181	-.088	-.139	.120	-.264	-.048	-.104	1.40
.026	.389	.058	.144	-.194	.217	-.182	-.198	-.220	.363	-.257	-.063	-.082	1.45
.078	.359	.078	.199	-.067	.217	-.129	-.270	-.323	.169	-.193	.010	-.128	1.50
-.001	.397	-.044	.153	-.225	.171	-.163	-.171	-.221	.291	-.241	.063	-.012	1.55
-.106	.476	-.146	.208	-.714	.121	-.065	-.167	-.220	.529	-.254	.294	.041	1.60
.063	.360	.046	.216	-.212	.207	-.184	-.121	-.258	.124	-.245	.075	-.073	1.65
.566	.152	.666	.235	.976	.356	-.364	-.330	-.129	-.642	-.176	-.640	-.668	1.70
3.263	-.964	2.193	.056	8.543	.080	-.392	-1.260	.656	-4.625	-.388	-3.566	-3.593	1.75
5.043	-15.571	0.178	-5.28	135.942	-.122	-.651	-5.766	25.147	-26.40	4.506	-21.22	-5.807	1.80
.292	.332	.275	.300	.229	.302	-.265	-.223	-.272	-.204	-.260	-.238	-.269	1.85
.321	.331	.302	.319	.286	.328	-.283	-.241	-.285	-.242	-.277	-.277	-.282	1.90
.338	.365	.326	.345	.316	.354	-.305	-.280	-.305	-.262	-.297	-.279	-.316	1.95
.356	.365	.336	.354	.327	.363	-.328	-.268	-.314	-.272	-.314	-.290	-.317	2.00
.379	.386	.359	.377	.351	.386	-.333	-.295	-.345	-.292	-.332	-.311	-.330	2.05
.403	.391	.384	.394	.401	.403	-.355	-.317	-.341	-.322	-.341	-.346	-.352	2.10
.421	.409	.402	.413	.418	.421	-.370	-.333	-.357	-.337	-.357	-.362	-.368	2.15
.440	.427	.421	.431	.435	.440	-.385	-.348	-.373	-.353	-.373	-.377	-.384	2.20
.458	.446	.440	.449	.452	.458	-.400	-.364	-.388	-.369	-.388	-.393	-.399	2.25
.476	.464	.458	.468	.469	.476	-.415	-.379	-.404	-.384	-.404	-.408	-.415	2.30
.494	.482	.476	.486	.485	.494	-.430	-.394	-.419	-.400	-.419	-.424	-.430	2.35
.512	.500	.495	.504	.502	.512	-.446	-.410	-.435	-.415	-.435	-.439	-.446	2.40
.531	.519	.513	.523	.519	.531	-.461	-.425	-.450	-.431	-.450	-.454	-.461	2.45

9 CASES

Table 16A — Scaling Run 300, Test Configuration 2: Two 1.52 cm Nozzles

5 C METER CHAMBER OBSTRUCTED GAS MIXING RUN 300

TIME (SEC)	PRESSURANT FOW - TOTAL, P (BAR)	T (DEG K)	FILL-TANK P (BAR)	THERMOCOUPLES LOCATION I T(DEG K) 1	2	3	4	5	6	7	8	9	10	11	12	13
-5	***	***	1.032	301.8	301.7	301.5	301.7	301.0	301.7	299.8	299.7	299.3	300.5	300.1	299.7	300.0
-4	***	***	1.054	301.7	301.7	301.5	301.7	301.0	301.7	299.9	299.7	299.5	300.5	300.1	299.7	299.9
-3	***	***	1.065	301.8	301.6	301.5	301.7	300.9	301.7	299.9	299.6	299.5	300.5	300.2	299.7	299.9
-2	***	***	1.047	301.8	301.7	301.5	301.7	301.0	301.7	299.9	299.7	299.5	300.5	300.2	299.7	300.0
-1	***	***	1.056	301.8	301.6	301.5	301.7	301.0	301.7	299.9	299.7	299.5	300.5	300.2	299.8	299.9
0	6.394	293.4	1.053	301.8	301.6	301.5	301.7	301.0	301.8	299.7	299.7	299.5	300.4	300.1	299.7	299.9
1	6.315	300.8	1.065	302.6	302.2	301.6	302.2	301.8	302.9	300.6	301.8	301.0	301.9	301.5	301.0	301.0
2	6.050	294.8	1.135	306.6	306.5	302.9	306.4	305.2	307.0	304.4	305.9	304.7	305.9	305.3	305.2	304.8
3	5.822	291.3	1.194	308.7	309.1	304.5	309.1	307.5	309.1	307.0	308.5	307.4	308.7	308.0	307.5	307.4
4	5.569	289.3	1.254	311.2	311.4	307.0	311.5	309.9	311.4	308.8	310.0	308.9	310.4	309.2	309.5	309.3
5	5.432	288.1	1.286	313.1	313.3	309.0	313.6	311.6	312.8	309.7	310.6	309.7	311.5	310.2	310.4	310.2
6	5.220	287.4	1.330	313.7	313.9	310.2	314.1	312.3	313.7	310.5	310.8	310.4	312.3	310.7	310.7	310.7
7	5.007	286.6	1.402	314.0	314.3	311.5	314.4	312.8	313.9	310.6	311.2	310.6	312.7	310.9	311.0	310.9
8	4.828	285.5	1.422	314.2	314.4	312.3	314.5	312.8	314.0	310.9	311.6	311.0	313.0	311.2	311.4	311.4
9	4.633	285.1	1.480	314.5	314.5	312.9	314.6	312.8	314.3	311.0	311.2	310.9	313.2	311.1	311.3	311.3
10	4.541	284.5	1.494	314.5	314.5	313.1	314.6	313.2	314.2	310.9	311.5	311.0	313.0	311.5	311.3	311.3
11	4.368	284.0	1.541	314.3	314.5	313.4	314.5	312.6	314.2	311.0	311.4	310.9	313.2	311.2	311.2	311.2
12	4.201	283.3	1.603	314.2	314.3	313.8	314.4	312.2	314.2	310.8	311.4	311.0	312.8	311.3	311.2	311.2
13	4.065	282.9	1.613	314.0	314.0	313.8	314.1	312.3	313.8	311.1	311.3	310.9	312.8	311.3	311.2	311.3
14	3.912	282.3	1.672	313.9	314.1	313.7	314.2	312.3	313.8	310.9	311.1	310.7	312.8	311.0	311.1	311.1
15	3.794	281.7	1.691	313.8	313.8	313.5	313.9	312.2	313.7	310.7	310.9	310.6	312.5	311.0	311.0	311.1
16	3.661	281.5	1.734	313.8	313.8	313.4	314.0	312.0	313.6	310.7	310.7	310.6	312.3	311.0	310.9	311.0
17	3.603	290.9	1.739	313.8	313.8	313.3	313.8	311.9	313.6	310.5	310.7	310.6	312.3	311.1	310.9	311.1
18	3.507	286.8	1.781	313.6	313.4	313.2	313.7	311.9	313.2	310.4	310.2	310.3	312.2	310.8	310.5	310.7
19	3.511	284.6	1.774	313.3	313.1	313.1	313.3	312.0	312.7	310.1	309.7	310.2	311.6	310.4	309.9	310.3
20	***	***	1.771	312.5	312.3	312.7	312.5	311.7	312.2	309.5	309.4	309.7	311.3	310.0	309.6	309.9
21	***	***	1.788	312.2	312.0	312.3	312.1	311.6	311.5	309.4	309.1	309.4	310.9	309.7	309.2	309.5
22	***	***	1.754	312.1	311.9	312.2	312.0	311.6	311.5	309.3	308.9	309.3	310.7	309.7	308.9	309.5
23	***	***	1.768	311.9	311.6	311.9	311.8	311.4	311.5	309.2	308.9	309.3	310.4	309.6	308.8	309.4
24	***	***	1.788	311.7	311.1	311.6	311.6	311.2	311.2	309.0	308.9	309.1	310.1	309.5	308.8	309.2
25	***	***	1.768	311.6	311.1	311.6	311.5	311.1	310.9	308.9	308.8	309.0	309.8	309.5	308.6	309.1
26	***	***	1.754	311.4	310.8	311.2	311.2	310.9	310.8	308.8	308.7	308.8	309.5	309.3	308.5	308.9
27	***	***	1.769	311.0	310.5	311.0	311.0	310.8	310.5	308.6	308.5	308.7	309.0	309.2	308.3	308.8
32	***	***	1.765	310.2	309.4	310.0	310.1	309.9	309.5	308.0	307.7	307.9	308.0	308.3	307.2	308.0
37	***	***	1.760	309.3	308.5	308.9	309.1	309.3	308.7	307.2	306.7	306.9	307.3	307.7	305.9	306.8
42	***	***	1.771	308.8	308.1	308.3	308.7	308.7	308.0	306.3	305.9	306.2	306.7	307.0	305.1	306.0
47	***	***	1.747	308.1	307.3	307.8	308.0	308.0	307.5	305.8	305.5	305.6	306.1	306.3	304.7	305.5
52	***	***	1.768	307.6	306.9	307.1	307.4	307.5	307.0	305.3	305.2	305.2	305.9	305.9	304.5	305.0
57	***	***	1.751	307.2	306.5	306.7	307.0	307.1	306.6	305.1	304.9	304.9	305.4	305.5	304.4	304.8
62	***	***	1.747	306.8	306.1	306.4	306.6	306.7	306.3	304.8	304.5	304.5	305.1	305.3	304.0	304.6
67	***	***	1.747	306.6	305.8	306.0	306.3	306.4	305.9	304.5	304.2	304.3	304.8	305.1	303.8	304.3
72	***	***	1.744	306.2	305.6	305.8	305.9	306.2	305.9	304.4	303.8	304.0	304.5	304.8	303.5	304.0
77	***	***	1.759	306.1	305.5	305.6	305.9	305.9	305.7	304.1	303.6	303.8	304.5	304.5	303.3	303.9
87	***	***	1.745	305.7	305.2	305.3	305.5	305.5	305.4	303.8	303.5	303.5	304.0	304.2	303.1	303.5

COORDINATES

I	R (M)	THETA (DEG)	Z (M)
1	0.229	00	0.152
2	0.229	00	0.000
3	0.076	00	0.152
4	0.102	00	0.076
5	0.076	00	-0.076
6	0.152	00	0.152
7	0.229	00	0.762
8	0.229	00	0.991
9	0.076	00	0.076
10	0.229	00	-0.076
11	0.152	00	0.762
12	0.229	00	0.914
13	0.229	00	0.838

(Table Continues)

UNCLASSIFIED

Table 16A — Scaling Run 300, Test Configuration 2: Two 1.52 cm Nozzles (Continued)

5 C METER CHAMBER OBSTRUCTED GAS MIXING RUN 107

TIME (SEC)	PRESSURANT FOW - TOTAL P (BAR)	T (DEG K)	FILL-TANK P (BAR)	THERMOCOUPLES LOCATION T (DEG K) 1	2	3	4	5	6	7	8	9	10	11	12	13
97	***	***	1.743	305.3	304.9	305.0	305.1	305.3	305.1	303.4	303.2	303.2	303.8	303.8	303.1	303.3
107	***	***	1.755	305.1	304.6	304.8	304.8	305.2	304.9	303.2	303.1	303.0	303.5	303.5	303.0	303.1
117	***	***	1.750	304.9	304.5	304.6	304.6	304.9	304.8	303.1	302.8	302.7	303.4	303.3	302.7	303.0
127	***	***	1.747	304.6	304.4	304.5	304.4	305.0	304.5	302.9	302.5	302.5	303.3	303.1	302.6	302.9
137	***	***	1.753	304.5	304.2	304.4	304.3	304.6	304.4	302.7	302.4	302.4	303.1	302.9	302.4	302.7
147	***	***	1.740	304.4	304.1	304.2	304.1	304.5	304.4	302.6	302.3	302.3	303.1	302.7	302.4	302.5
157	***	***	1.742	304.2	304.0	304.1	304.0	304.5	304.2	302.5	302.3	302.2	303.0	302.6	302.3	302.4
167	***	***	1.754	304.1	303.9	304.1	303.9	304.5	304.0	302.4	302.1	302.1	302.9	302.4	302.2	302.5
177	***	***	1.751	304.0	303.9	304.0	303.8	304.3	304.0	302.3	302.0	302.0	302.9	302.5	302.2	302.3
187	***	***	1.766	303.9	303.8	303.9	303.8	304.2	304.0	302.2	301.9	302.0	302.7	302.4	302.1	302.2
197	***	***	1.766	303.9	303.8	303.9	303.7	304.1	304.0	302.2	301.8	302.0	302.7	302.4	302.0	302.1
207	***	***	1.768	303.9	303.8	303.8	303.6	304.0	303.9	302.2	301.7	302.0	302.7	302.3	302.0	302.0
217	***	***	1.754	303.9	303.8	303.8	303.6	304.0	303.9	302.2	301.7	301.9	302.6	302.3	302.0	302.0
227	***	***	1.753	303.8	303.8	303.8	303.6	304.1	303.9	302.1	301.7	301.8	302.7	302.2	302.0	302.0
237	***	***	1.753	303.9	303.7	303.8	303.6	304.0	303.9	302.0	301.7	301.8	302.7	302.2	301.8	302.0
247	***	***	1.734	303.8	303.7	303.9	303.6	304.0	303.9	302.1	301.6	301.8	302.6	302.2	302.0	302.0
257	***	***	1.726	303.8	303.7	303.8	303.6	304.0	303.9	302.1	301.6	301.7	302.6	302.2	301.8	302.1
267	***	***	1.746	303.8	303.6	303.8	303.6	304.0	303.8	302.0	301.6	301.8	302.6	302.1	301.8	301.9
277	***	***	1.763	303.8	303.6	303.8	303.5	304.0	303.8	302.0	301.5	301.8	302.5	302.2	301.8	301.8
287	***	***	1.738	303.8	303.6	303.8	303.5	304.0	303.8	302.0	301.5	301.7	302.5	302.1	301.8	301.9
297	***	***	1.750	303.8	303.6	303.8	303.5	304.0	303.8	301.9	301.5	301.7	302.4	302.0	301.8	301.8
307	***	***	1.747	303.8	303.6	303.8	303.5	304.0	303.8	301.9	301.5	301.7	302.4	302.0	301.8	301.8

Table 16B — Scaling Run 301, Test Configuration 2: Two 1.52 cm Nozzles

5 C METER CHAMBER OBSTRUCTED GAS MIXING RUN 301

TIME (SEC)	PRESSURANT FOW - TOTAL, P (BAR)	T (DEG K)	FILL-TANK P (BAR)	THERMOCOUPLES LOCATION I T(DEG K) 1	2	3	4	5	6	7	8	9	10	11	12	13
-5	***	***	1.059	302.3	302.1	302.0	302.2	301.5	302.2	300.4	300 3	299.9	301.0	300 7	300.3	300 5
-4	***	***	1.035	302.3	302.1	302.0	302.2	301.5	302.2	300.4	300.3	299.9	301.0	300.6	300.3	300.6
-3	***	***	1.074	302.3	302.1	302.0	302.2	301.5	302.2	300.4	300.2	300.0	301.0	300.8	300.3	300.4
-2	***	***	1.052	302.3	302.1	302.0	302.2	301.5	302.2	300.4	300 2	299.9	301.0	300.7	300.4	300 5
-1	***	***	1.058	302.3	302.1	302.0	302.2	301.5	302.2	300.4	300 2	299.9	301.0	300 7	300.3	300.4
0	6.412	293.8	1.063	302.3	302.1	302.0	302 2	301.5	302.2	300.5	300.3	300 0	301.0	300 7	300.4	300 5
1	6.322	299.7	1.046	303.0	302.4	302.1	302.3	302.3	303.1	300.9	303.1	302.0	302.8	302.4	301.9	301.7
2	6.131	296.6	1.121	306.2	305.9	302.9	305.9	304.6	306.6	304.4	306.2	304.5	305.7	305.1	305.3	304.9
3	5.884	290 6	1.177	309.8	310.0	305.3	310.1	308.2	309.9	307.0	308 5	307.3	308 7	307.7	307.8	307 4
4	5.639	288.7	1.263	311.8	312.3	307.8	312.6	310.6	312.1	309.1	310.2	308.9	310.6	309.5	309.8	309.5
5	5.420	287.6	1.297	313.3	313.4	309.1	313.7	311.7	313.3	310.3	311.0	310 1	312.0	310 7	310.8	310 8
6	5.205	286.6	1.345	314.0	314.3	310.7	314.5	312.7	313.8	311.1	311.5	311.0	312.7	311.6	311.3	311.3
7	5.004	285.6	1.399	314.5	314.5	311.9	314.7	313.3	314.3	311.4	311.6	311.5	313.2	311.9	311.7	311.6
8	4.822	285.2	1.422	314.6	314.7	312.4	314.9	313.3	314.5	311.6	311.7	311.5	313.6	311.9	311.9	312.0
9	4.694	284.6	1.491	314.8	314.9	312.9	315.1	313.3	314.7	311.4	311.9	311.3	313.6	311.6	311.7	311.6
10	4.530	283.9	1.518	314.7	314.7	313.5	315.0	313.3	314.7	311.6	311 7	311.5	313.5	311.9	311.9	311 9
11	4.366	283.3	1.534	314.7	314.7	313.8	315.0	313.3	314.6	311.6	311.6	311.4	313.6	311.9	311.8	312.0
12	4.206	282.9	1.605	314.9	314.9	313.8	315.1	313.1	314.5	311.4	311.5	311.3	313.5	311.6	311.7	311.7
13	4.067	282.2	1.634	314.6	314.5	313.8	314.7	312.9	314.3	311.3	311.5	311.1	313.4	311.6	311.5	311.6
14	3.962	281.7	1.667	314.5	314.3	313.8	314.5	312.6	314.1	311.5	311.6	311.0	313.3	311.6	311.7	311.6
15	3.844	281.3	1.704	314.5	314.2	313.8	314.3	312 7	314 0	311.4	311.3	311.0	313.1	311.6	311.6	311 6
16	3.712	280 8	1.732	314.2	314.2	313.8	314.3	312.6	313.8	311.3	311.0	310.9	313.0	311.5	311.3	311.4
17	3.598	287.6	1.773	314.0	314.0	313.6	314.1	312.5	313.5	310.9	310.9	310.6	312.8	311.2	310.9	311.0
18	3.551	284.4	1.773	313.8	313.8	313.4	313.9	312.4	313.3	310.4	310.6	310.5	312.3	310.8	310.7	310.7
19	3.560	284.9	1.780	313.1	313.2	313.2	313.2	312.3	312.8	310.2	310.2	310.2	312.0	310.6	310.4	310.4
20	***	***	1.775	312.8	312.5	312.9	312.8	312.0	312.2	309.9	310.2	310.1	311.7	310.4	310.2	310.2
21	***	***	1.793	312.4	312.3	312.6	312.5	311.9	312.2	309.7	309.8	310.0	311.5	310.2	309.8	310.0
22	***	***	1.772	312.3	312.3	312.4	312.4	311.9	311.9	309.5	309.6	309.8	311.2	310.0	309.6	309.8
23	***	***	1.751	312.1	312.0	312.2	312.3	311.7	311.6	309.2	309.5	309.5	311.0	309.8	309.4	309.5
24	***	***	1.773	311.8	311.7	311.9	312.0	311.6	311.3	309.0	309.4	309.5	310.8	309.5	309.0	309.3
25	***	***	1.790	311.6	311.6	311.7	311.9	311.5	311.0	308.7	309.0	309.3	310.6	309.3	308.8	308.8
26	***	***	1.750	311.4	311.3	311.6	311.6	311.4	310.9	308.5	309.0	309.1	310.4	309.1	308.6	308.8
27	***	***	1.771	311.1	311.0	311.3	311.3	311.1	310.6	308.2	308.8	308.8	310.1	308.9	308.2	308.4
32	***	***	1.759	310.7	309.7	310.4	310.6	310.6	310.1	307.8	308.0	308.3	308.9	308.2	307.2	307.6
37	***	***	1.768	309.7	309.0	309.5	309.6	309.7	308.8	307.1	307.1	307.5	308.2	307.8	306.2	307 0
42	***	***	1.768	309.0	308.5	308.8	309.0	309.2	308.5	306.4	306.6	306.6	307.3	307.0	305.6	306.2
47	***	***	1.753	308.7	307.8	308.1	308.4	308.2	308.1	305.8	306.0	305.9	306.6	306.4	305.1	305.6
52	***	***	1.780	308.3	307.3	307 6	308.0	307.7	307.6	305.4	305.5	305.3	306.2	305.9	304.6	305.2
57	***	***	1.738	308.0	306.9	307.2	307.7	307 3	307.3	305.3	304.9	305.1	305.9	305.8	304.5	305.2
62	***	***	1.772	307.6	306.7	306.9	307.2	306.9	306.9	305.1	304.7	304.9	305.6	305.5	304.4	304.8
67	***	***	1.761	307.1	306.3	306.6	306.7	306.6	306.4	305.0	304.7	304.7	305.2	305.4	304.6	304.8
72	***	***	1.745	306.6	305.9	306.4	306.4	306.4	306.1	304.8	304.5	304.5	304.9	305.2	304.2	304.8
77	***	***	1.772	306.4	305.9	306.1	306.2	306.2	305.9	304.5	304.4	304.2	304.8	304.9	304.1	304.4
87	***	***	1.741	306.1	305.6	305.7	305.8	305.8	305.7	304.2	303.8	303.8	304.6	304.5	303 8	304.1

COORDINATES

I	R (M)	THETA (DEG)	Z (M)
1	0 229	00	0 152
2	0.229	00	0.000
3	0 076	00	0 152
4	0.102	00	0 076
5	0 076	00	-0.076
6	0 152	00	0.152
7	0.229	00	0.762
8	0 229	00	0.991
9	0 076	00	0 076
10	0 229	00	-0.076
11	0 152	00	0.762
12	0.229	00	0.914
13	0.229	00	0 838

(Table Continues)

UNCLASSIFIED

Table 16B — Scaling Run 301, Test Configuration 2: Two 1.52 cm Nozzles (Continued)

5 C METER CHAMBER OBSTRUCTED GAS MIXING RUN 107

TIME (SEC)	PRESSURANT FOW - TOTAL P (BAR)	PRESSURANT FOW - TOTAL T (DEG K)	FILL-TANK P (BAR)	THERMOCOUPLES LOCATION I T(DEG K) 1	2	3	4	5	6	7	8	9	10	11	12	13
97	***	***	1.757	305.7	305.4	305.4	305.5	305.6	305.4	303.8	303.6	303.5	304.2	304.2	303.6	303.7
107	***	***	1.755	305.4	305.1	305.2	305.2	305.3	305.2	303.6	303.5	303.3	304.1	303.9	303.3	303.6
117	***	***	1.747	305.2	304.9	305.0	305.0	305.2	305.0	303.5	303.1	303.1	303.8	303.8	303.1	303.3
127	***	***	1.741	305.1	304.8	304.9	304.9	305.2	304.9	303.3	303.1	303.0	303.7	303.6	303.1	303.3
137	***	***	1.746	304.9	304.6	304.7	304.6	305.2	304.7	303.1	303.0	302.9	303.6	303.4	303.0	303.1
147	***	***	1.770	304.8	304.5	304.6	304.5	305.2	304.6	303.1	303.1	303.0	303.8	303.7	303.2	303.1
157	***	***	1.751	304.6	304.5	304.6	304.5	305.2	304.5	303.0	302.7	302.7	303.5	303.3	302.9	303.0
167	***	***	1.758	304.6	304.4	304.5	304.4	305.2	304.5	302.8	302.5	302.6	303.3	303.1	302.7	302.7
177	***	***	1.752	304.5	304.3	304.5	304.3	305.2	304.5	302.7	302.5	302.7	303.4	303.0	302.8	303.0
187	***	***	1.760	304.5	304.2	304.5	304.2	305.1	304.5	303.0	302.4	302.5	303.3	303.1	302.8	302.8
197	***	***	1.750	304.4	304.2	304.4	304.1	305.0	304.4	302.8	302.4	302.5	303.1	302.9	302.6	302.7
207	***	***	1.769	304.3	304.2	304.4	304.0	304.9	304.3	302.6	302.3	302.4	303.1	302.9	302.5	302.5
217	***	***	1.757	304.2	304.2	304.3	304.0	304.6	304.3	303.6	303.4	303.3	304.5	303.7	303.4	303.8
227	***	***	1.741	304.2	304.2	304.2	304.0	304.6	304.4	302.9	302.4	302.5	303.3	303.1	302.9	303.1
237	***	***	1.754	304.2	304.1	304.2	304.0	304.6	304.3	302.7	302.5	302.8	303.7	303.0	302.8	302.4
247	***	***	1.757	304.2	304.0	304.3	304.0	304.6	304.3	302.5	302.2	302.4	303.1	302.6	302.4	302.4
257	***	***	1.761	304.2	304.0	304.4	304.0	304.6	304.3	302.7	302.4	302.8	303.2	302.8	302.8	302.7
267	***	***	1.757	304.2	304.0	304.3	303.9	304.5	304.2	302.9	302.2	302.3	303.0	302.8	302.5	302.5
277	***	***	1.729	304.2	303.9	304.2	303.9	304.6	304.2	302.5	302.1	302.3	303.0	302.6	302.3	302.4
287	***	***	1.761	304.1	303.9	304.2	303.9	304.5	304.2	302.4	302.1	302.3	302.9	302.5	302.4	302.3
297	***	***	1.758	304.1	303.9	304.2	303.9	304.5	304.2	302.4	302.0	302.3	302.9	302.5	302.4	302.4
307	***	***	1.749	304.0	303.9	304.2	303.9	304.5	304.1	302.4	302.2	302.4	303.3	302.7	302.4	302.5
317	***	***	1.755	304.0	303.9	304.1	303.9	304.4	304.0	302.4	302.0	302.3	302.9	302.5	302.3	302.4
327	***	***	1.754	304.0	303.9	304.0	303.9	304.5	304.0	302.5	302.0	302.3	303.0	302.5	302.3	302.4

Table 16C — Scaling Run 302, Test Configuration 2: Two 1.52 cm Nozzles

5 C METER CHAMBER OBSTRUCTED GAS MIXING RUN 302

TIME (SEC)	PRESSURANT FOW - TOTAL, P (BAR)	T (DEG K)	FILL-TANK P (BAR)	THERMOCOUPLES LOCATION I T(DEG K) 1	2	3	4	5	6	7	8	9	10	11	12	13
-5	***	***	1.059	302.4	302.3	302.3	302.3	301.7	302.3	300.6	300.3	300.1	301.0	300.8	300.6	300.6
-4	***	***	1.050	302.4	302.2	302.2	302.3	301.7	302.3	300.6	300.4	300.0	301.0	300.8	300.5	300.6
-3	***	***	1.058	302.4	302.2	302.2	302.3	301.7	302.3	300.6	300.3	300.1	301.0	300.9	300.5	300.5
-2	***	***	1.061	302.4	302.2	302.2	302.3	301.7	302.3	300.6	300.3	300.0	301.0	300.8	300.5	300.6
-1	***	***	1.053	302.4	302.2	302.2	302.3	301.7	302.3	300.5	300.3	300.0	301.0	300.8	300.5	300.6
0	6.387	293.8	1.064	302.4	302.3	302.2	302.3	301.7	302.3	300.6	300.3	300.1	301.0	300.9	300.5	300.6
1	6.308	300.1	1.081	303.5	303.2	302.4	303.2	302.7	303.7	301.9	303.0	302.0	302.9	302.6	302.4	302.2
2	6.047	292.9	1.130	307.5	307.6	303.8	307.6	305.9	308.0	305.5	307.1	305.8	306.8	306.5	306.3	305.9
3	5.865	290.0	1.173	309.9	310.0	305.4	310.2	308.5	309.8	307.0	308.8	307.0	308.8	307.8	308.1	307.9
4	5.630	288.8	1.245	311.5	311.7	307.0	312.0	310.2	311.3	309.3	310.2	309.1	310.7	309.8	309.8	309.7
5	5.394	287.4	1.315	312.9	313.3	309.1	313.4	311.9	312.9	310.4	311.1	310.2	312.0	310.6	310.9	310.7
6	5.196	286.4	1.337	314.0	314.4	310.7	314.5	312.6	313.9	311.0	311.6	310.8	312.8	311.2	311.5	311.6
7	4.985	285.6	1.410	314.3	314.6	311.7	314.8	313.0	314.2	311.3	311.6	311.4	313.4	311.7	311.7	311.7
8	4.874	284.9	1.409	314.7	315.0	312.6	315.1	313.4	314.6	311.2	311.9	311.3	313.6	311.6	311.6	311.6
9	4.689	284.0	1.472	314.6	315.0	313.4	315.0	313.4	314.6	311.5	311.7	311.6	313.7	312.0	312.0	312.0
10	4.511	283.7	1.536	314.7	314.8	313.8	314.9	313.0	314.6	311.7	311.6	311.6	313.6	312.2	311.9	311.9
11	4.354	283.0	1.549	314.8	314.8	313.8	315.0	313.0	314.5	311.5	311.8	311.6	313.4	312.0	311.8	311.8
12	4.194	282.4	1.601	314.7	314.8	314.0	315.1	313.3	314.5	311.7	311.7	311.5	313.6	312.0	312.1	312.0
13	4.109	281.9	1.621	315.0	314.8	314.1	315.1	313.0	314.6	311.5	311.7	311.3	313.5	311.9	312.1	312.2
14	3.964	281.5	1.659	314.7	314.6	314.1	314.9	312.6	314.3	311.5	311.6	311.2	313.4	311.7	311.9	312.0
15	3.817	280.9	1.712	314.5	314.6	314.0	314.8	312.8	314.2	311.2	311.3	311.1	313.3	311.6	311.6	311.8
16	3.712	280.4	1.737	314.3	314.5	313.8	314.6	312.5	314.1	311.3	311.1	311.1	313.2	311.7	311.5	311.6
17	3.589	289.3	1.767	314.2	314.3	313.8	314.4	312.1	314.0	311.1	310.9	311.1	312.9	311.6	311.3	311.5
18	3.558	286.5	1.783	313.9	313.9	313.7	314.0	312.1	313.6	310.7	310.3	310.7	312.5	311.0	310.7	310.9
19	3.563	285.5	1.773	313.0	313.4	313.4	313.5	312.3	313.0	310.3	309.9	310.3	312.1	310.7	310.2	310.6
20	***	***	1.771	312.8	312.9	313.2	313.1	312.2	312.6	310.2	309.8	310.2	311.9	310.4	310.2	310.4
21	***	***	1.765	312.5	312.5	312.8	312.7	312.0	312.3	309.8	310.2	310.4	311.7	310.3	310.1	310.4
22	***	***	1.789	312.3	312.3	312.6	312.4	311.7	311.9	310.2	309.8	310.2	311.6	310.3	309.5	310.2
23	***	***	1.769	312.0	311.9	312.3	312.1	311.6	311.6	309.6	309.8	310.0	311.0	310.0	309.8	310.2
24	***	***	1.770	311.9	311.5	312.1	311.9	311.3	311.3	309.4	309.4	309.5	310.4	309.7	309.4	309.4
25	***	***	1.770	311.7	311.2	311.8	311.6	311.1	311.0	309.1	309.5	309.5	310.0	309.4	309.1	309.5
26	***	***	1.769	311.5	310.9	311.5	311.3	310.9	310.8	308.7	308.9	309.1	309.8	309.2	308.6	309.0
27	***	***	1.751	311.3	310.9	311.4	311.2	310.9	310.7	308.6	308.8	308.8	309.6	308.9	308.2	308.8
32	***	***	1.746	310.4	309.8	310.2	310.3	310.2	309.6	308.0	308.0	308.0	308.8	308.3	307.2	308.0
37	***	***	1.754	309.8	309.0	309.4	309.5	309.5	308.9	307.3	307.3	307.2	308.0	307.6	306.6	307.0
42	***	***	1.778	309.2	308.6	308.8	308.9	308.8	308.2	307.2	306.6	306.6	307.3	307.2	305.9	307.1
47	***	***	1.762	308.7	307.9	308.3	308.5	308.4	307.8	306.3	306.2	306.1	306.6	306.7	305.4	305.9
52	***	***	1.749	308.1	307.1	307.8	307.8	308.0	307.3	305.9	305.7	305.7	305.9	306.3	304.8	305.4
57	***	***	1.765	307.5	306.6	307.2	307.3	307.6	307.0	305.4	305.2	305.3	305.5	305.9	304.6	305.0
62	***	***	1.756	307.0	306.3	306.8	306.9	307.1	306.6	305.2	305.0	305.1	305.2	305.6	304.5	304.9
67	***	***	1.749	306.7	306.2	306.6	306.6	306.7	306.4	305.1	304.8	304.8	305.1	305.5	304.4	304.9
72	***	***	1.775	306.6	306.1	306.3	306.5	306.6	306.2	304.9	304.5	304.5	305.0	305.3	304.3	304.8
77	***	***	1.750	306.4	305.9	306.1	306.2	306.4	305.9	304.6	304.3	304.3	304.6	305.0	303.9	304.4
87	***	***	1.735	306.0	305.6	305.9	305.9	306.1	305.8	304.4	303.9	303.9	304.5	304.6	303.8	304.2

COORDINATES

I	R (M)	THETA (DEG)	Z (M)
1	0.229	00	0.152
2	0.229	00	0.000
3	0.076	00	0.152
4	0.102	00	0.076
5	0.076	00	-0.076
6	0.152	00	0.152
7	0.229	00	0.762
8	0.229	00	0.991
9	0.076	00	0.076
10	0.229	00	-0.076
11	0.152	00	0.762
12	0.229	00	0.914
13	0.229	00	0.838

(Table Continues)

UNCLASSIFIED

Table 16C — Scaling Run 302, Test Configuration 2: Two 1.52 cm Nozzles (Continued)

5 C METER CHAMBER OBSTRUCTED GAS MIXING RUN 107

TIME (SEC)	PRESSURANT FOW - TOTAL P (BAR)	T (DEG K)	FILL-TANK P (BAR)	THERMOCOUPLES LOCATION I T(DEG K) 1	2	3	4	5	6	7	8	9	10	11	12	13
97	***	***	1.738	305.8	305.3	305.5	305.5	305.7	305.5	303.9	303.9	303.7	304.4	304.4	303.6	303.9
107	***	***	1.762	305.5	305.1	305.2	305.2	305.5	305.3	303.9	303.5	303.8	304.0	304.2	303.6	303.8
117	***	***	1.769	305.2	304.9	305.2	305.1	305.3	305.2	303.7	304.1	305.2	307.1	305.5	306.0	306.5
127	***	***	1.736	305.1	304.8	305.0	304.9	305.2	305.0	303.4	303.1	303.1	303.8	303.6	303.1	303.4
137	***	***	1.746	305.0	304.6	304.9	304.8	305.1	304.9	303.3	303.1	302.9	303.6	303.4	303.1	303.3
147	***	***	1.748	304.8	304.5	304.8	304.5	305.1	304.8	303.1	302.9	302.9	303.5	303.3	303.0	303.1
157	***	***	1.754	304.8	304.5	304.8	304.5	304.8	304.7	303.0	302.8	302.8	303.4	303.2	302.9	303.0
167	***	***	1.749	304.6	304.5	304.6	304.5	304.9	304.6	303.0	302.7	302.7	303.4	303.1	303.0	303.0
177	***	***	1.756	304.5	304.4	304.5	304.4	304.8	304.5	302.9	302.6	302.7	303.3	303.1	302.9	302.9
187	***	***	1.757	304.5	304.4	304.5	304.4	304.9	304.5	302.9	302.5	302.6	303.3	303.1	302.8	302.9
197	***	***	1.756	304.5	304.4	304.5	304.3	304.8	304.5	302.9	302.5	302.6	303.3	303.0	302.7	302.8
207	***	***	1.764	304.5	304.3	304.5	304.2	304.9	304.5	302.8	302.4	302.6	303.1	303.0	302.7	302.8
217	***	***	1.744	304.4	304.2	304.5	304.1	304.8	304.5	302.9	302.4	302.6	303.1	302.9	302.7	302.8
227	***	***	1.740	304.4	304.2	304.5	304.1	304.8	304.5	302.8	302.5	302.5	303.1	302.9	302.7	302.8
237	***	***	1.755	304.3	304.2	304.5	304.0	304.8	304.5	302.7	302.4	302.4	303.1	302.9	302.7	302.7
247	***	***	1.751	304.4	304.2	304.5	304.0	304.8	304.5	302.7	302.4	302.5	303.1	302.8	302.7	302.7
257	***	***	1.738	304.4	304.1	304.4	304.0	304.6	304.4	302.7	302.4	302.5	303.1	302.9	302.7	302.9
267	***	***	1.746	304.2	304.1	304.4	304.0	304.6	304.4	302.7	302.4	302.5	303.1	302.9	302.7	302.7
277	***	***	1.753	304.2	304.1	304.4	303.9	304.5	304.4	302.7	302.3	302.5	303.1	302.8	302.5	302.6
287	***	***	1.752	304.2	304.1	304.4	303.9	304.5	304.4	302.7	302.3	302.4	303.1	302.8	302.5	302.5
297	***	***	1.752	304.2	304.0	304.4	304.0	304.5	304.4	302.6	302.3	302.4	303.0	302.7	302.6	302.6
307	***	***	1.760	304.2	304.0	304.3	303.9	304.5	304.4	302.6	302.3	302.4	303.0	302.7	302.6	302.5
317	***	***	1.762	304.2	304.0	304.2	303.9	304.5	304.3	302.6	302.3	302.5	303.0	302.7	302.5	302.4
327	***	***	1.750	304.1	303.9	304.3	303.9	304.5	304.3	303.2	304.6	303.3	303.8	315.3	302.9	302.9
337	***	***	1.746	304.2	304.0	304.3	303.9	304.5	304.3	302.8	302.7	302.5	303.0	302.8	302.6	302.7
347	***	***	1.746	304.1	303.9	304.2	303.9	304.4	304.2	302.7	302.3	302.4	303.0	302.6	302.5	302.7
357	***	***	1.741	304.1	303.9	304.2	303.9	304.4	304.2	302.4	302.4	302.4	303.0	302.6	302.5	302.5
367	***	***	1.748	304.1	303.9	304.1	303.9	304.4	304.1	302.4	302.3	302.4	302.9	302.7	302.5	302.6

Table 16D — Scaling Run 306, Test Configuration 2: Two 1.52 cm Nozzles

5 C METER CHAMBER OBSTRUCTED GAS MIXING RUN 306

TIME (SEC)	PRESSURANT FOW - TOTAL, P (BAR)	T (DEG K)	FILL-TANK P (BAR)	THERMOCOUPLES LOCATION I T(DEG K) 1	2	3	4	5	6	7	8	9	10	11	12	13
-5	***	***	1.062	298.4	298.2	298.2	298.2	297.5	298.3	297.0	297.3	297.1	297.4	297.2	297.0	296.9
-4	***	***	1.035	298.3	298.2	298.2	298.2	297.5	298.4	297.1	297.2	297.1	297.4	297.1	296.9	296.9
-3	***	***	1.053	298.4	298.2	298.2	298.2	297.5	298.3	296.9	297.3	297.1	297.4	297.1	297.1	296.9
-2	***	***	1.054	298.4	298.2	298.2	298.2	297.5	298.4	297.0	297.2	297.0	297.4	297.0	296.9	297.0
-1	***	***	1.070	298.4	298.2	298.1	298.2	297.5	298.3	296.9	297.2	297.0	297.4	297.1	296.9	296.8
0	6.351	288.5	1.041	298.3	298.2	298.2	298.2	297.5	298.3	297.0	297.3	297.1	297.4	297.0	296.9	296.9
1	6.204	292.2	1.090	300.3	299.8	298.5	299.7	299.0	300.5	297.9	300.3	299.3	299.3	299.3	298.8	298.2
2	6.041	289.5	1.099	304.5	304.4	300.3	304.5	302.7	304.8	300.9	303.0	301.7	302.3	301.8	301.7	301.2
3	5.795	287.8	1.174	306.6	306.7	302.3	306.7	304.6	306.7	303.8	305.5	303.9	305.2	304.1	304.4	304.0
4	5.552	286.3	1.217	308.8	308.9	304.5	309.2	307.0	308.9	305.7	306.9	305.9	307.1	305.9	306.0	305.8
5	5.320	285.1	1.300	310.0	310.1	306.4	310.2	308.5	309.9	306.5	307.8	307.1	308.5	307.0	307.0	306.6
6	5.119	284.5	1.321	310.2	310.5	307.5	310.6	308.9	310.2	307.6	308.4	308.0	309.3	307.8	308.0	307.8
7	4.913	283.7	1.393	310.8	311.0	308.5	311.2	309.4	310.6	307.8	308.7	308.4	309.8	308.1	308.3	308.0
8	4.712	283.0	1.450	311.1	311.3	309.3	311.5	309.5	310.9	308.2	308.5	308.8	310.1	308.6	308.4	308.3
9	4.607	282.4	1.470	311.0	311.2	309.7	311.4	309.5	311.0	308.2	308.5	308.8	310.1	308.3	308.2	308.3
10	4.437	282.0	1.506	310.9	311.0	309.9	311.2	309.4	310.8	308.4	308.5	308.7	310.0	308.3	308.3	308.4
11	4.266	281.4	1.555	311.0	311.1	310.2	311.3	309.3	310.9	308.1	308.6	308.5	310.0	308.2	308.5	308.4
12	4.119	280.9	1.593	310.9	311.0	310.3	311.0	309.3	310.7	308.0	308.5	308.5	309.9	308.3	308.2	308.2
13	3.983	280.4	1.627	310.9	311.0	310.2	311.1	309.2	310.6	308.1	308.3	308.2	309.8	308.1	308.2	308.3
14	3.882	279.8	1.641	310.8	310.8	310.2	311.0	308.9	310.5	307.9	308.1	308.2	309.8	308.0	308.0	308.1
15	3.753	279.2	1.681	310.5	310.4	310.2	310.7	308.8	310.3	307.6	307.8	308.0	309.5	307.8	307.7	307.9
16	3.627	278.8	1.736	310.5	310.3	310.1	310.6	308.8	310.2	307.3	307.6	308.1	309.3	307.8	307.6	307.7
17	3.506	288.5	1.756	310.4	310.2	310.0	310.4	308.8	310.0	307.6	307.6	308.1	309.2	307.9	307.4	307.7
18	3.442	283.0	1.755	310.0	309.8	309.8	310.2	308.5	309.6	307.4	307.4	307.8	308.8	307.6	307.1	307.4
19	3.437	283.0	1.794	309.7	309.6	309.8	309.7	308.7	309.4	307.0	307.3	307.6	308.6	307.4	307.0	307.1
20	***	***	1.767	309.2	309.0	309.5	309.2	308.3	309.0	306.8	306.9	307.5	308.1	307.0	306.8	306.8
21	***	***	1.778	308.8	308.5	309.1	308.8	308.1	308.6	306.6	306.6	307.3	307.8	306.9	306.5	306.6
22	***	***	1.766	308.8	308.2	308.9	308.8	308.1	308.3	306.3	306.7	307.0	307.3	306.7	306.4	306.5
23	***	***	1.772	308.6	308.0	308.7	308.5	307.9	308.1	306.0	306.4	306.6	307.0	306.4	305.9	306.1
24	***	***	1.752	308.3	307.8	308.4	308.2	307.6	307.9	305.9	306.2	306.6	306.7	306.2	305.8	305.9
25	***	***	1.776	308.1	307.6	308.2	308.1	307.5	307.7	305.6	306.0	306.4	306.6	306.1	305.5	305.7
26	***	***	1.760	308.0	307.4	308.0	308.0	307.3	307.3	305.5	305.8	306.2	306.4	305.9	305.1	305.5
27	***	***	1.760	307.8	307.1	307.7	307.8	307.1	307.3	305.3	305.7	306.0	306.0	305.7	304.9	305.2
32	***	***	1.773	306.6	306.4	306.7	306.8	306.4	306.2	304.5	304.9	304.9	305.1	305.0	303.9	304.3
37	***	***	1.746	306.0	305.3	305.8	306.0	305.6	305.3	303.8	304.0	304.2	304.1	304.3	302.8	303.5
42	***	***	1.750	305.3	304.3	304.8	305.0	304.8	304.5	303.0	303.4	303.4	303.1	303.4	302.0	302.8
47	***	***	1.753	304.5	303.4	304.0	304.1	304.0	303.8	302.4	302.7	302.7	302.4	302.8	301.5	302.2
52	***	***	1.763	303.9	303.1	303.5	303.6	303.6	303.4	301.9	302.3	302.3	301.9	302.4	301.1	301.5
57	***	***	1.754	303.5	302.8	303.2	303.2	303.3	303.1	301.5	301.8	301.9	301.6	302.0	300.9	301.3
62	***	***	1.734	303.1	302.6	302.9	303.0	303.0	302.7	301.5	301.5	301.7	301.3	301.8	300.8	301.2
67	***	***	1.762	302.9	302.4	302.6	302.7	302.7	302.4	301.0	301.2	301.3	301.2	301.5	300.4	300.8
72	***	***	1.747	302.5	302.1	302.4	302.4	302.4	302.3	300.8	300.8	301.0	301.0	301.2	300.2	300.5
77	***	***	1.743	302.3	301.8	302.2	302.2	302.3	302.0	300.6	300.6	300.9	300.8	300.9	300.1	300.3
87	***	***	1.754	301.9	301.5	301.8	301.7	302.0	301.8	300.2	300.2	300.4	300.4	300.6	299.7	300.0

COORDINATES

I	R (M)	THETA (DEG)	Z (M)
1	0.229	00	0.152
2	0.229	00	0.000
3	0.076	00	0.152
4	0.102	00	0.076
5	0.076	00	-0.076
6	0.152	00	0.152
7	0.229	00	0.762
8	0.229	00	0.991
9	0.076	00	0.076
10	0.229	00	-0.076
11	0.152	00	0.762
12	0.229	00	0.914
13	0.229	00	0.838

(Table Continues)

UNCLASSIFIED

Table 16D — Scaling Run 306, Test Configuration 2: Two 1.52 cm Nozzles (Continued)

5 C METER CHAMBER OBSTRUCTED GAS MIXING RUN 107

TIME (SEC)	PRESSURANT FOW - TOTAL P (BAR)	T (DEG K)	FILL-TANK P (BAR)	THERMOCOUPLES LOCATION I T(DEG K) 1	2	3	4	5	6	7	8	9	10	11	12	13
97	***	***	1.749	301.7	301.2	301.5	301.3	301.8	301.3	300.0	300.0	300.2	300.2	300.2	299.7	299.8
107	***	***	1.751	301.4	301.0	301.2	301.2	301.7	301.2	299.7	299.9	299.9	300.1	299.9	299.5	299.5
117	***	***	1.753	301.2	300.9	301.0	301.0	301.7	301.0	299.5	299.7	299.7	299.9	299.7	299.4	299.4
127	***	***	1.756	301.0	300.8	300.9	300.8	301.6	300.9	299.5	299.5	299.5	299.7	299.5	299.3	299.3
137	***	***	1.748	300.9	300.6	300.8	300.6	301.5	300.9	299.3	299.4	299.5	299.7	299.4	299.1	299.2
147	***	***	1.740	300.9	300.6	300.8	300.6	301.5	300.9	299.3	299.3	299.4	299.5	299.2	299.1	299.1
157	***	***	1.748	300.8	300.5	300.8	300.4	301.4	300.8	299.2	299.2	299.3	299.5	299.1	299.0	299.0
167	***	***	1.744	300.8	300.5	300.8	300.4	301.2	300.8	299.0	299.1	299.3	299.5	299.1	298.9	298.9
177	***	***	1.745	300.7	300.4	300.6	300.3	300.9	300.8	299.0	299.0	299.3	299.5	299.0	298.8	298.8
187	***	***	1.745	300.6	300.4	300.5	300.3	300.9	300.7	299.0	299.0	299.3	299.4	299.0	298.8	298.9
197	***	***	1.748	300.6	300.4	300.5	300.3	300.9	300.6	299.0	298.9	299.2	299.4	299.0	298.8	298.8
207	***	***	1.723	300.6	300.4	300.5	300.3	300.9	300.6	299.0	298.8	299.1	299.4	298.9	298.8	298.8
217	***	***	1.740	300.6	300.3	300.4	300.2	300.5	300.6	298.9	298.8	299.2	299.5	298.8	298.8	298.8
227	***	***	1.747	300.5	300.3	300.4	300.2	300.4	300.5	298.9	298.8	299.1	299.3	298.8	298.8	298.8
237	***	***	1.731	300.5	300.2	300.4	300.2	300.3	300.5	298.9	298.8	299.0	299.2	298.8	298.8	298.8
247	***	***	1.729	300.5	300.2	300.4	300.2	300.4	300.5	298.8	298.8	299.0	299.2	298.8	298.8	298.8
257	***	***	1.743	300.4	300.3	300.3	300.2	300.4	300.5	298.9	298.8	299.0	299.1	298.9	298.8	298.8
267	***	***	1.746	300.3	300.2	300.2	300.0	300.6	300.4	298.8	298.8	298.8	299.2	298.8	298.7	298.7

Table 16E — Scaling Run 307, Test Configuration 2: Two 1.52 cm Nozzles

5 C METER CHAMBER OBSTRUCTED GAS MIXING RUN 307

TIME (SEC)	PRESSURANT FOW - TOTAL, P (BAR)	T (DEG K)	FILL-TANK P (BAR)	THERMOCOUPLES LOCATION I T(DEG K) 1	2	3	4	5	6	7	8	9	10	11	12	13
-5	***	***	1.054	299.1	299.0	299.0	299.0	298.3	299.1	297.7	298.0	297.7	298.1	297.8	297.6	297.7
-4	***	***	1.057	299.1	299.0	299.0	299.0	298.4	299.1	297.6	298.0	297.8	298.1	297.8	297.6	297.7
-3	***	***	1.073	299.1	299.0	299.0	299.0	298.3	299.1	297.7	298.0	297.7	298.1	297.8	297.6	297.7
-2	***	***	1.049	299.1	299.0	299.0	299.0	298.4	299.1	297.7	298.0	297.7	298.1	297.9	297.5	297.7
-1	***	***	1.042	299.1	299.0	298.9	299.0	298.3	299.1	297.7	298.0	297.7	298.1	297.8	297.6	297.7
0	6.286	297.1	1.075	300.2	299.8	299.0	299.8	299.2	300.3	298.2	299.7	299.0	299.2	299.0	298.7	298.6
1	6.042	291.3	1.125	304.0	304.2	300.5	304.0	302.5	304.5	301.8	304.1	302.4	303.1	302.4	302.7	302.4
2	5.886	289.0	1.167	306.5	306.6	302.3	306.4	304.9	306.6	303.6	305.9	304.2	305.2	304.6	304.4	304.1
3	5.646	287.3	1.213	308.8	309.0	304.5	309.0	307.3	308.8	305.5	307.7	306.1	307.3	305.9	306.3	306.0
4	5.404	286.0	1.273	310.2	310.6	306.6	310.7	309.0	310.2	307.0	308.5	307.6	308.8	307.5	307.6	307.4
5	5.190	285.4	1.337	310.7	311.1	307.6	311.2	309.3	310.6	307.9	309.2	308.5	309.8	308.1	308.5	308.3
6	4.981	284.5	1.399	311.2	311.6	308.9	311.6	309.9	311.2	308.5	309.3	309.2	310.2	309.1	308.8	308.8
7	4.869	283.7	1.409	311.6	311.6	309.7	311.6	310.0	311.3	308.7	309.4	309.3	310.3	308.9	308.9	309.1
8	4.676	283.2	1.461	311.7	311.9	310.2	312.0	310.2	311.6	308.9	309.4	309.4	310.7	309.0	309.0	309.0
9	4.500	282.8	1.497	311.8	311.7	310.4	311.9	310.6	311.5	308.8	309.4	309.4	310.6	309.1	308.9	308.9
10	4.339	282.2	1.541	311.8	311.9	310.8	312.0	310.2	311.6	308.7	309.5	309.1	310.7	309.0	308.9	308.9
11	4.171	281.6	1.603	311.6	311.6	310.9	311.7	309.9	311.4	308.6	309.4	309.2	310.6	309.0	308.9	308.9
12	4.087	281.1	1.588	311.6	311.7	310.9	311.9	309.8	311.5	308.7	309.4	308.8	310.5	308.7	308.8	308.8
13	3.952	280.5	1.651	311.3	311.3	310.9	311.5	309.7	311.0	308.6	309.1	309.0	310.3	308.9	308.7	308.8
14	3.805	279.8	1.681	311.1	311.1	310.8	311.2	309.5	311.0	308.5	309.1	308.9	310.1	308.9	308.7	308.8
15	3.684	279.5	1.711	311.2	311.1	310.7	311.4	309.6	311.0	308.5	308.9	308.8	310.1	308.7	308.7	308.8
16	3.554	289.2	1.771	235.2	311.1	310.8	311.3	236.8	235.4	308.2	308.7	308.6	310.0	308.5	308.4	308.4
17	3.481	284.2	1.779	310.8	310.7	310.6	310.9	309.1	310.5	307.9	308.5	308.3	309.7	308.1	308.0	308.0
18	3.487	283.5	1.767	310.3	310.2	310.4	310.4	309.3	309.8	307.5	307.9	308.1	309.2	307.6	307.6	307.8
19	***	***	1.773	310.0	309.7	310.1	310.0	309.0	309.5	307.3	307.7	308.0	308.9	307.6	307.3	307.5
20	***	***	1.777	309.5	309.4	309.8	309.5	308.8	309.2	307.0	307.6	307.8	308.5	307.4	307.1	307.4
21	***	***	1.794	309.3	309.1	309.5	309.1	308.7	308.8	306.6	307.3	307.6	308.2	307.3	306.8	307.0
22	***	***	1.758	309.1	308.8	309.4	309.0	308.7	308.4	306.3	307.2	307.4	308.1	307.0	306.6	306.8
23	***	***	1.781	308.8	308.7	309.0	308.8	308.5	308.0	305.9	306.9	307.3	307.7	306.7	306.2	306.4
24	***	***	1.790	308.5	308.4	308.8	308.7	308.4	308.1	305.9	306.7	307.0	307.5	306.6	305.9	306.3
25	***	***	1.766	308.4	308.2	308.8	308.4	308.2	307.8	305.8	306.6	306.8	307.3	306.4	305.6	306.0
26	***	***	1.789	308.3	308.1	308.5	308.3	308.1	307.9	305.4	306.4	306.6	307.0	306.1	305.2	305.8
31	***	***	1.757	307.3	307.0	307.4	307.4	307.3	306.7	304.8	305.5	305.8	305.9	305.5	304.2	304.9
36	***	***	1.769	306.5	306.0	306.5	306.4	306.6	305.8	304.3	304.7	305.0	305.0	304.9	303.7	304.4
41	***	***	1.762	305.9	305.1	305.6	305.5	305.8	305.2	303.6	304.0	304.2	304.4	304.2	302.9	303.5
46	***	***	1.758	305.3	304.5	304.9	305.1	305.3	304.8	303.1	303.4	303.6	303.7	303.7	302.4	303.1
51	***	***	1.780	305.0	304.3	304.4	304.5	304.9	304.2	302.7	303.0	303.1	303.3	303.1	301.9	302.6
56	***	***	1.761	304.5	304.0	303.9	304.2	304.6	303.8	302.4	302.5	302.7	303.1	302.7	301.5	302.2
61	***	***	1.747	304.2	303.6	303.8	303.9	304.3	303.8	302.3	302.4	302.6	302.6	302.6	301.5	302.0
66	***	***	1.761	304.0	303.3	303.5	303.6	303.8	303.4	302.1	302.3	302.4	302.3	302.4	301.5	301.8

COORDINATES

I	R (M)	THETA (DEG)	Z (M)
1	0.229	00	0.152
2	0.229	00	0.000
3	0.076	00	0.152
4	0.102	00	0.076
5	0.076	00	-0.076
6	0.152	00	0.152
7	0.229	00	0.762
8	0.229	00	0.991
9	0.076	00	0.076
10	0.229	00	-0.076
11	0.152	00	0.762
12	0.229	00	0.914
13	0.229	00	0.638

(Table Continues)

UNCLASSIFIED

Table 16E — Scaling Run 307, Test Configuration 2: Two 1.52 cm Nozzles (Continued)

5 C METER CHAMBER OBSTRUCTED GAS MIXING RUN 107

TIME (SEC)	PRESSURANT FOW - TOTAL P (BAR)	T (DEG K)	FILL-TANK P (BAR)	THERMOCOUPLES LOCATION I T(DEG K) 1	2	3	4	5	6	7	8	9	10	11	12	13
71	***	***	1.753	303.6	303.1	303.2	303.3	303.7	303.1	301.8	301.8	302.3	302.0	302.2	301.0	301.6
76	***	***	1.759	303.3	302.9	303.0	303.1	303.4	302.9	301.5	301.6	302.0	301.8	302.0	300.9	301.2
86	***	***	1.741	303.0	302.4	302.6	302.7	303.0	302.6	301.2	301.2	301.4	301.4	301.3	300.7	301.0
96	***	***	1.730	302.6	302.3	302.4	302.4	302.7	302.4	300.9	300.9	300.9	301.1	301.0	300.4	300.9
106	***	***	1.730	302.4	302.0	302.3	302.2	302.3	302.2	300.6	300.8	300.9	300.9	300.8	300.3	300.5
116	***	***	1.755	302.2	301.8	302.0	302.0	302.1	302.0	300.4	300.6	300.6	300.8	300.6	300.2	300.3
126	***	***	1.736	302.0	301.7	301.8	301.8	302.0	301.8	300.3	300.4	300.4	300.6	300.4	300.1	300.2
136	***	***	1.754	301.8	301.6	301.8	301.6	302.0	301.7	300.2	300.2	300.3	300.4	300.2	300.0	300.1
146	***	***	1.754	301.8	301.5	301.7	301.4	302.0	301.6	300.0	300.2	300.2	300.4	300.2	299.9	300.0
156	***	***	1.751	301.7	301.3	301.5	301.3	302.0	301.5	300.0	300.1	300.2	300.3	300.0	299.9	300.0
166	***	***	1.748	301.6	301.2	301.5	301.2	301.8	301.5	300.0	300.0	300.2	300.2	300.0	299.9	299.9
176	***	***	1.748	301.5	301.2	301.5	301.2	301.8	301.5	299.9	300.0	300.1	300.2	299.9	299.7	299.8
186	***	***	1.759	301.5	301.2	301.5	301.2	301.8	301.5	299.8	299.9	300.0	300.2	299.9	299.7	299.7
196	***	***	1.770	301.4	301.2	301.5	301.1	301.8	301.5	299.7	299.9	300.0	300.2	300.0	299.6	299.6
206	***	***	1.745	301.3	301.2	301.5	301.1	301.6	301.5	299.7	299.8	300.0	300.2	299.8	299.6	299.7
216	***	***	1.770	301.3	301.1	301.5	301.0	301.7	301.4	299.6	299.7	300.0	300.2	299.9	299.6	299.6
226	***	***	1.760	301.3	301.1	301.5	301.0	301.7	301.3	299.6	299.7	300.0	300.0	299.7	299.5	299.6
236	***	***	1.735	301.3	301.0	301.4	301.0	301.6	301.3	299.7	299.6	300.0	300.0	299.7	299.5	299.6
246	***	***	1.751	301.2	301.0	301.3	300.9	301.6	301.3	299.6	299.6	299.9	300.0	299.7	299.5	299.5
256	***	***	1.747	301.2	301.0	301.3	300.9	301.5	301.3	299.5	299.6	299.9	300.0	299.6	299.5	299.6

Table 16F — Scaling Run 308, Test Configuration 2: Two 1.52 cm Nozzles

5 C METER CHAMBER OBSTRUCTED GAS MIXING RUN 308

TIME (SEC)	PRESSURANT FOW - TOTAL, P (BAR)	T (DEG K)	FILL-TANK P (BAR)	THERMOCOUPLES LOCATION I T(DEG K) 1	2	3	4	5	6	7	8	9	10	11	12	13
-5	***	***	1.744	302.6	302.4	302.6	302.4	302.7	302.6	300.9	301.0	301.0	301.3	301.0	300.9	300.9
-4	***	***	1.722	302.6	302.4	302.6	302.4	302.7	302.6	300.9	301.0	301.0	301.3	301.0	300.9	300.9
-3	***	***	1.738	302.6	302.4	302.6	302.4	302.8	302.5	300.9	301.0	301.0	301.3	301.0	300.9	300.9
-2	***	***	1.733	302.6	302.4	302.6	302.4	302.8	302.6	300.9	301.0	301.0	301.3	301.0	300.9	300.9
-1	***	***	1.735	302.6	302.4	302.5	302.4	302.9	302.5	300.9	301.0	301.0	301.3	301.0	300.9	300.9
0	3.771	300.2	1.739	302.5	302.4	302.6	302.4	302.8	302.5	300.9	300.9	301.0	301.2	301.0	300.8	300.9
1	3.767	300.2	1.730	302.6	302.4	302.5	302.4	302.9	302.5	300.9	301.0	300.9	301.3	301.0	300.8	301.0
2	3.770	300.2	1.746	302.5	302.4	302.6	302.4	302.9	302.5	300.9	300.9	301.0	301.2	301.0	300.8	300.9
3	3.774	300.2	1.713	302.5	302.4	302.5	302.4	302.9	302.6	300.9	300.9	300.9	301.2	300.9	300.8	301.0
4	3.768	300.2	1.742	302.6	302.4	302.5	302.4	302.9	302.5	300.9	300.9	301.0	301.2	301.0	300.8	300.9
5	3.784	300.3	1.729	302.5	302.4	302.5	302.3	302.9	302.5	300.9	300.9	300.9	301.3	300.9	300.8	300.9
6	3.771	300.2	1.736	302.5	302.3	302.5	302.3	302.9	302.5	300.9	300.9	300.9	301.2	300.9	300.8	300.9
7	3.762	300.3	1.745	302.5	302.4	302.6	302.3	302.9	302.4	300.9	300.9	300.9	301.2	300.9	300.8	300.8
8	3.783	300.3	1.734	302.5	302.3	302.5	302.3	302.9	302.5	300.9	300.9	300.9	301.2	300.9	300.8	300.9
9	3.776	300.3	1.732	302.5	302.3	302.5	302.3	302.9	302.4	300.9	300.9	300.9	301.2	300.9	300.8	300.9
10	3.765	300.3	1.745	302.4	302.3	302.5	302.3	302.9	302.5	300.9	300.9	300.9	301.2	300.9	300.8	300.8
11	3.778	300.3	1.735	302.4	302.3	302.5	302.3	302.8	302.5	300.9	300.9	300.9	301.2	300.9	300.8	300.9
12	3.785	300.3	1.736	302.4	302.3	302.6	302.3	302.7	302.5	300.9	300.9	300.9	301.2	300.9	300.7	300.9
13	3.769	300.3	1.741	302.4	302.3	302.5	302.3	302.7	302.5	300.9	300.9	300.9	301.2	300.9	300.8	300.8
14	3.780	300.3	1.735	302.4	302.3	302.5	302.3	302.7	302.5	300.9	300.9	300.9	301.2	300.9	300.8	300.9
15	3.787	300.3	1.736	302.4	302.3	302.5	302.2	302.6	302.5	300.9	300.9	300.9	301.2	300.9	300.8	300.8
16	3.781	300.3	1.735	302.4	302.3	302.4	302.2	302.6	302.5	300.9	300.9	300.9	301.2	300.9	300.8	300.8
17	3.777	300.3	1.734	302.5	302.3	302.5	302.2	302.6	302.5	300.9	300.9	300.9	301.2	300.9	300.8	300.8
18	3.782	300.3	1.739	302.4	302.3	302.5	302.2	302.6	302.5	300.9	301.3	301.1	301.2	301.0	300.7	300.8
19	***	***	1.719	302.4	302.3	302.4	302.2	302.6	302.5	300.9	301.2	300.9	301.2	300.9	300.8	300.9
20	***	***	1.748	302.4	302.3	302.5	302.2	302.6	302.4	300.9	300.9	300.9	301.1	300.9	300.6	300.8
21	***	***	1.726	302.4	302.3	302.5	302.2	302.6	302.5	300.9	300.9	300.9	301.1	300.9	300.7	300.9
22	***	***	1.737	302.4	302.3	302.4	302.2	302.6	302.4	300.9	300.9	300.9	301.2	300.9	300.7	300.8
23	***	***	1.735	302.4	302.3	302.5	302.2	302.7	302.4	300.9	300.9	300.9	301.2	300.9	300.8	300.8
24	***	***	1.726	302.4	302.3	302.4	302.2	302.6	302.4	300.8	300.9	300.9	301.2	300.9	300.6	300.8
25	***	***	1.735	302.4	302.3	302.4	302.2	302.6	302.4	300.9	300.8	300.9	301.2	300.9	300.7	300.8
26	***	***	1.735	302.4	302.3	302.4	302.2	302.6	302.4	300.9	300.9	300.9	301.2	300.9	300.7	300.8
31	***	***	1.735	302.4	302.2	302.4	302.2	302.6	302.4	300.8	300.8	300.9	301.1	300.9	300.6	300.8
36	***	***	1.746	302.4	302.3	302.4	302.2	302.6	302.4	300.8	300.8	300.9	301.1	300.9	300.6	300.6
41	***	***	1.722	302.4	302.2	302.5	302.2	302.6	302.4	300.8	300.8	300.9	301.1	300.9	300.6	300.6
46	***	***	1.737	302.4	302.2	302.4	302.2	302.7	302.4	300.8	300.8	300.9	301.0	300.8	300.6	300.6
51	***	***	1.733	302.4	302.2	302.4	302.1	302.7	302.4	300.8	300.7	300.9	301.0	300.8	300.6	300.6
56	***	***	1.727	302.4	302.2	302.4	302.1	302.5	302.4	300.7	300.8	300.9	301.1	300.8	300.6	300.6
61	***	***	1.745	302.4	302.2	302.4	302.0	302.6	302.4	300.6	300.8	300.9	301.0	300.8	300.6	300.6
66	***	***	1.733	302.4	302.2	302.4	302.0	302.5	302.4	300.6	300.6	300.9	301.0	300.8	300.5	300.6

I	COORDINATES R (M)	THETA (DEG)	Z (M)
1	0.229	00	0.152
2	0.229	00	0.000
3	0.076	00	0.152
4	0.102	00	0.076
5	0.076	00	-0.076
6	0.152	00	0.152
7	0.229	00	0.762
8	0.229	00	0.991
9	0.076	00	0.076
10	0.229	00	-0.076
11	0.152	00	0.762
12	0.229	00	0.914
13	0.229	00	0.638

(Table Continues)

UNCLASSIFIED

Table 16F — Scaling Run 308, Test Configuration 2: Two 1.52 cm Nozzles (Continued)

5 C METER CHAMBER OBSTRUCTED GAS MIXING RUN 107

TIME (SEC)	PRESSURANT FOW - TOTAL P (BAR)	T (DEG K)	FILL-TANK P (BAR)	THERMOCOUPLES LOCATION I T(DEG K) 1	2	3	4	5	6	7	8	9	10	11	12	13
71	***	***	1.735	302.3	302.1	302.4	302.0	302.6	302.4	300.7	300.6	300.9	301.0	300.8	300.6	300.6
76	***	***	1.727	302.4	302.2	302.4	302.0	302.6	302.4	300.7	300.6	300.9	301.0	300.8	300.5	300.6
86	***	***	1.738	302.4	302.0	302.3	301.9	302.6	302.3	300.6	300.6	300.8	301.0	300.7	300.5	300.5
96	***	***	1.732	302.3	302.1	302.3	301.9	302.4	302.3	300.6	300.6	300.8	301.0	300.6	300.5	300.5
106	***	***	1.737	302.2	302.0	302.3	301.8	302.3	302.3	300.5	300.6	300.8	300.9	300.7	300.5	300.5
116	***	***	1.732	302.3	302.0	302.3	301.8	302.4	302.3	300.5	300.5	300.8	300.9	300.6	300.4	300.5
126	***	***	1.746	302.2	302.0	302.3	301.8	302.4	302.3	300.5	300.4	300.8	300.9	300.6	300.4	300.4
136	***	***	1.710	302.2	301.9	302.2	301.8	302.4	302.2	300.6	300.4	300.8	300.9	300.6	300.3	300.5
146	***	***	1.750	302.1	301.9	302.2	301.7	302.4	302.2	300.5	300.4	300.7	300.9	300.6	300.3	300.4
29	***	***	27.600	272.8	300.7	300.6	300.9	301.1	300.9	300.8	300.4	302.5	300.4	306.9	302.2	302.2
39	***	***	27.600	272.8	300.6	300.5	300.9	301.0	300.9	300.8	300.4	302.4	300.4	307.0	302.2	302.3
49	***	***	27.500	272.8	300.6	300.6	300.8	301.0	300.9	300.7	300.4	302.4	300.4	307.0	302.1	302.2
59	***	***	27.500	272.8	300.6	300.6	300.8	301.0	300.9	300.7	300.4	302.4	300.4	307.0	302.0	302.2
69	***	***	27.450	272.8	300.6	300.5	300.8	301.0	300.9	300.7	300.5	302.4	300.5	307.0	302.1	302.2
79	***	***	27.400	272.8	300.5	300.5	300.7	301.0	300.8	300.6	300.5	302.4	300.5	307.0	302.0	302.1
89	***	***	27.400	272.8	300.5	300.5	300.8	301.0	300.8	300.6	300.6	302.3	300.6	307.0	302.0	302.1
99	***	***	27.400	272.8	300.5	300.5	300.6	300.9	300.8	300.6	300.5	302.3	300.5	307.1	301.8	302.0
109	***	***	27.400	272.8	300.4	300.4	300.8	300.9	300.8	300.6	300.6	302.3	300.6	307.1	301.8	302.1
119	***	***	27.300	272.8	300.5	300.4	300.6	300.9	300.8	300.5	300.6	302.3	300.6	307.1	301.8	302.0

Table 16G — Scaling Run 309, Test Configuration 2: Two 1.52 cm Nozzles

5 C METER CHAMBER OBSTRUCTED GAS MIXING RUN 309

TIME (SEC)	PRESSURANT FOW - TOTAL, P (BAR)	PRESSURANT FOW - TOTAL, T (DEG K)	FILL-TANK P (BAR)	THERMOCOUPLES LOCATION I T(DEG K) 1	2	3	4	5	6	7	8	9	10	11	12	13
-5	***	***	1.045	301.5	301.0	301.2	301.3	300.6	301.4	299.9	300.0	299.7	300.2	300.0	299.6	299.8
-4	***	***	1.064	301.4	301.1	301.3	301.3	300.6	301.4	299.9	300.0	299.7	300.2	300.0	299.6	299.8
-3	***	***	1.070	301.4	301.0	301.3	301.3	300.5	301.4	299.8	299.9	299.7	300.2	300.0	299.6	299.7
-2	***	***	1.054	301.4	301.0	301.3	301.3	300.5	301.4	299.9	300.0	299.7	300.1	300.0	299.9	306.4
-1	***	***	1.054	301.5	301.0	301.2	301.3	300.5	301.3	299.8	300.0	299.7	300.2	300.0	299.7	299.8
0	6.391	292.0	1.061	301.5	301.0	301.3	301.3	300.7	301.5	299.8	299.9	299.7	300.2	300.0	299.6	299.7
1	6.243	299.8	1.086	304.8	304.4	301.9	304.4	303.3	305.2	301.7	303.9	302.4	302.9	302.6	302.3	302.0
2	5.960	292.9	1.165	307.3	307.3	303.4	307.3	305.8	308.0	305.3	307.3	305.9	306.8	306.1	306.0	305.7
3	5.729	290.5	1.220	310.0	310.3	305.9	310.3	308.7	310.3	307.6	309.1	308.0	309.0	308.1	308.0	307.9
4	5.489	289.1	1.286	311.7	312.0	308.2	312.0	310.6	311.9	308.9	310.2	309.5	310.7	309.5	309.4	309.2
5	5.365	288.5	1.299	312.5	312.7	309.4	312.8	311.1	312.7	309.5	310.6	310.0	311.2	310.0	309.8	309.7
6	5.165	287.5	1.353	313.1	313.5	310.7	313.5	311.9	313.1	310.3	311.1	310.7	311.8	310.7	310.5	310.5
7	4.940	286.7	1.425	313.8	313.8	311.6	314.0	312.0	313.6	310.8	311.4	311.0	312.3	310.9	310.9	310.9
8	4.755	286.2	1.453	314.0	314.1	312.2	314.2	312.3	313.8	310.9	311.5	311.1	312.6	311.3	311.2	311.3
9	4.577	285.5	1.490	314.0	314.2	312.6	314.3	312.4	313.7	311.1	311.3	311.1	312.7	311.3	311.1	311.4
10	4.468	284.7	1.527	313.8	314.0	312.9	314.2	312.3	313.6	310.9	311.3	311.1	312.8	311.0	311.1	311.1
11	4.306	284.2	1.558	313.8	313.8	312.9	313.8	312.2	313.6	310.8	311.2	311.2	312.5	311.2	311.0	311.0
12	4.147	283.8	1.610	313.7	313.7	313.1	313.8	312.0	313.4	310.7	311.0	311.0	312.6	311.2	310.9	311.0
13	4.012	283.2	1.643	313.6	313.6	313.0	313.7	311.7	313.3	310.6	311.0	311.0	312.4	311.0	310.7	310.8
14	3.883	282.6	1.663	313.4	313.5	313.0	313.7	311.7	312.9	310.3	310.7	310.8	312.3	310.9	310.4	310.5
15	3.785	282.3	1.722	313.3	313.3	312.9	313.5	311.6	313.1	310.2	310.9	310.4	312.1	310.6	310.6	310.5
16	3.666	281.9	1.727	313.1	313.3	312.9	313.4	311.5	312.9	310.2	310.7	310.4	312.2	310.5	310.5	310.8
17	3.547	289.7	1.770	312.9	313.0	312.8	313.2	311.1	312.6	310.1	310.2	310.2	311.9	310.2	310.2	310.4
18	3.534	286.7	1.777	312.3	312.4	312.6	312.3	311.4	312.3	309.4	309.6	309.7	311.4	309.6	309.5	309.7
19	3.562	287.2	1.764	312.1	312.1	312.3	312.1	311.3	311.9	309.0	309.5	309.4	311.0	309.4	309.3	309.3
20	***	***	1.767	311.6	311.6	312.0	311.6	310.9	311.5	308.9	309.2	309.2	310.7	309.2	309.0	309.2
21	***	***	1.783	311.4	311.3	311.9	311.4	310.9	310.9	308.7	308.9	309.1	310.2	309.0	308.7	308.9
22	***	***	1.753	311.1	311.0	311.6	311.1	310.7	310.8	308.6	308.9	309.1	310.2	308.8	308.5	308.8
23	***	***	1.766	311.0	310.7	311.2	310.9	310.6	310.6	308.4	308.8	308.9	309.9	308.7	308.3	308.6
24	***	***	1.771	310.9	310.6	311.1	310.9	310.5	310.5	308.1	308.7	308.7	309.5	308.4	308.1	308.2
25	***	***	1.761	310.6	310.4	310.9	310.7	310.3	310.1	308.0	308.5	308.2	309.4	308.2	307.8	308.1
26	***	***	1.780	310.4	310.2	310.6	310.4	310.2	309.7	307.8	308.1	308.1	309.1	308.0	307.5	307.8
27	***	***	1.749	310.2	310.0	310.4	310.2	310.1	309.5	307.6	308.1	308.1	308.9	308.0	307.3	307.7
32	***	***	1.753	309.7	309.0	309.4	309.6	309.2	308.9	306.8	307.3	307.2	307.8	307.1	306.4	306.8
37	***	***	1.763	308.8	308.2	308.5	308.8	308.4	308.1	306.2	306.6	306.6	307.0	306.6	305.5	306.1
42	***	***	1.744	308.2	307.5	307.8	308.1	307.8	307.5	305.8	305.9	306.0	306.3	306.2	304.5	305.4
47	***	***	1.770	307.7	306.6	307.1	307.4	307.0	306.8	305.2	305.3	305.4	305.6	305.8	304.2	305.0
52	***	***	1.761	306.8	306.1	306.4	306.6	306.6	306.1	304.7	304.7	304.9	305.2	305.3	303.7	304.4
57	***	***	1.746	306.4	305.8	306.0	306.2	306.1	305.9	304.4	304.4	304.5	304.8	304.8	303.4	304.0
62	***	***	1.751	306.1	305.4	305.8	305.9	305.8	305.8	304.1	304.0	304.4	304.4	304.5	303.3	303.9
67	***	***	1.743	305.8	305.2	305.5	305.5	305.5	305.4	303.9	303.8	304.1	304.1	304.4	303.1	303.8

I	COORDINATES R (M)	THETA (DEG)	Z (M)
1	0.229	00	0.152
2	0.229	00	0.000
3	0.076	00	0.152
4	0.102	00	0.076
5	0.076	00	-0.076
6	0.152	00	0.152
7	0.229	00	0.762
8	0.229	00	0.991
9	0.076	00	0.076
10	0.229	00	-0.076
11	0.152	00	0.762
12	0.229	00	0.914
13	0.229	00	0.838

(Table Continues)

UNCLASSIFIED

Table 16G — Scaling Run 309, Test Configuration 2: Two 1.52 cm Nozzles (Continued)

5 C METER CHAMBER OBSTRUCTED GAS MIXING RUN 107

TIME (SEC)	PRESSURANT FOW - TOTAL P (BAR)	T (DEG K)	FILL-TANK P (BAR)	THERMOCOUPLES LOCATION I T(DEG K) 1	2	3	4	5	6	7	8	9	10	11	12	13
72	***	***	1.740	305.5	304.9	305.1	305.2	305.2	305.2	303.8	303.8	303.9	303.8	304.1	303.1	303.5
77	***	***	1.739	305.3	304.6	304.8	305.1	304.9	305.1	303.5	303.5	303.7	303.7	303.9	303.0	303.3
87	***	***	1.747	304.9	304.4	304.5	304.6	304.6	304.6	303.1	303.1	303.3	303.5	303.5	302.7	303.0
97	***	***	1.750	304.5	304.2	304.3	304.4	304.4	304.4	302.9	303.0	303.0	303.1	303.1	302.5	302.7
107	***	***	1.756	304.3	303.9	304.0	304.0	304.1	304.0	302.6	302.7	302.6	302.9	302.8	302.3	302.5
117	***	***	1.757	304.0	303.7	303.9	303.8	304.0	303.9	302.4	302.5	302.4	302.7	302.6	302.2	302.3
127	***	***	1.728	303.9	303.6	303.8	303.7	303.9	303.8	302.3	302.3	302.3	302.5	302.4	302.0	302.3
137	***	***	1.735	303.8	303.5	303.8	303.5	303.8	303.8	302.1	302.2	302.2	302.4	302.3	301.9	302.1
147	***	***	1.740	303.6	303.3	303.6	303.4	303.8	303.6	302.0	302.1	302.0	302.4	302.0	301.8	302.0
157	***	***	1.741	303.5	303.3	303.6	303.3	303.5	303.6	301.8	302.0	302.0	302.2	302.0	301.8	301.9
167	***	***	1.752	303.4	303.2	303.5	303.2	303.5	303.5	301.8	301.9	302.0	302.3	302.0	301.7	301.8
177	***	***	1.734	303.4	303.1	303.5	303.1	303.3	303.5	301.7	301.8	302.0	302.1	301.9	301.7	301.8
187	***	***	1.746	303.4	303.1	303.3	303.1	303.3	303.3	301.8	301.7	302.0	302.1	301.8	301.7	301.7
197	***	***	1.747	303.3	303.1	303.4	303.1	303.4	303.4	301.8	301.7	301.9	302.0	301.8	301.6	301.7
207	***	***	1.751	303.3	303.0	303.3	303.0	303.3	303.3	301.7	301.6	301.8	302.0	301.8	301.6	301.6
217	***	***	1.750	303.3	303.0	303.3	303.0	303.4	303.3	301.7	301.7	301.8	302.0	301.8	301.5	301.5
227	***	***	1.746	303.2	303.0	303.3	303.0	303.5	303.2	301.7	301.5	301.7	301.9	301.7	301.5	301.5
237	***	***	1.729	303.1	303.0	303.2	302.9	303.6	303.2	301.6	301.6	301.7	301.9	301.7	301.5	301.6
247	***	***	1.753	303.1	303.0	303.3	302.9	303.5	303.3	301.6	301.5	301.6	301.8	301.7	301.5	301.5
257	***	***	1.758	303.1	302.9	303.1	302.9	303.2	303.1	301.6	301.4	301.7	301.8	301.6	301.4	301.4
267	***	***	1.763	303.1	302.9	303.1	302.9	303.3	303.1	301.5	301.4	301.7	301.8	301.7	301.3	301.4
277	***	***	1.748	303.1	303.0	303.1	302.9	303.4	303.1	301.5	301.5	301.7	301.9	301.5	301.4	301.5
287	***	***	1.737	303.1	303.0	303.1	302.8	303.3	303.1	301.5	301.4	301.6	301.8	301.5	301.4	301.4
297	***	***	1.736	303.1	302.9	303.1	302.7	303.3	303.1	301.5	301.3	301.6	301.9	301.5	301.3	301.4
307	***	***	1.744	303.1	302.9	303.1	302.7	303.3	303.1	301.4	301.3	301.6	301.7	301.5	301.3	301.3
317	***	***	1.746	303.0	302.9	303.1	302.7	303.3	303.1	301.4	301.3	301.6	301.7	301.5	301.3	301.3
327	***	***	1.757	303.0	302.8	303.1	302.7	303.3	303.1	301.3	301.3	301.6	301.8	301.5	301.2	301.3
337	***	***	1.738	303.0	302.8	303.0	302.7	303.3	303.1	301.3	301.3	301.5	301.8	301.5	301.2	301.3
347	***	***	1.748	303.0	302.9	303.1	302.6	303.3	303.1	301.3	301.3	301.5	301.8	301.5	301.2	301.3

Table 16H — Scaling Run 310, Test Configuration 2: Two 1.52 cm Nozzles

5 C METER CHAMBER OBSTRUCTED GAS MIXING RUN 310

TIME (SEC)	PRESSURANT FOW - TOTAL, P (BAR)	T (DEG K)	FILL-TANK P (BAR)	THERMOCOUPLES LOCATION I T(DEG K) 1	2	3	4	5	6	7	8	9	10	11	12	13
-5	***	***	1.053	302.0	301.8	301.8	301.8	301.2	302.0	300.2	300.4	300.2	300.8	300.4	300.2	300.3
-4	***	***	1.058	302.0	301.8	301.8	301.8	301.2	301.9	300.2	300.4	300.2	300.8	300.4	300.2	300.3
-3	***	***	1.040	302.0	301.8	301.8	301.9	301.2	302.0	300.3	300.4	300.1	300.8	300.4	300.2	300.4
-2	***	***	1.051	302.0	301.8	301.8	301.8	301.2	301.9	300.2	300.4	300.2	300.8	300.5	300.2	300.3
-1	***	***	1.054	302.0	301.8	301.8	301.8	301.2	301.9	300.2	300.4	300.2	300.7	300.4	300.2	300.3
0	6.393	299.2	1.059	302.5	302.1	301.8	302.0	301.8	302.5	300.3	300.4	300.2	300.8	300.4	300.2	300.3
1	6.184	297.0	1.100	306.2	306.2	302.9	306.1	304.8	306.6	302.9	305.2	304.0	304.5	304.3	304.0	303.7
2	5.922	293.0	1.172	308.7	308.9	304.4	309.1	307.3	309.1	306.6	308.6	306.8	307.8	307.0	307.4	307.2
3	5.689	290.8	1.219	311.4	311.8	306.8	311.8	310.0	311.5	308.7	310.1	308.7	310.2	309.1	309.2	309.0
4	5.461	289.5	1.280	313.0	313.4	309.1	313.5	311.6	312.8	309.6	311.2	310.2	311.6	310.2	310.6	310.2
5	5.308	288.8	1.318	313.6	314.1	310.2	314.3	312.2	313.4	310.3	311.3	310.9	312.3	310.7	310.7	310.6
6	5.104	288.0	1.365	314.2	314.5	311.4	314.6	312.8	313.9	310.9	311.8	311.3	312.9	311.4	311.3	311.2
7	4.921	287.2	1.394	314.6	315.0	312.3	315.2	313.1	314.1	311.1	311.9	311.6	313.4	311.7	311.6	311.7
8	4.730	286.7	1.456	314.7	314.7	312.8	315.0	313.1	314.3	311.6	311.9	311.8	313.5	311.9	311.6	311.7
9	4.541	286.1	1.510	314.7	314.9	313.2	315.2	312.9	314.4	311.1	311.9	311.7	313.6	311.6	311.6	311.5
10	4.447	285.4	1.521	314.7	314.8	313.5	315.1	312.8	314.4	311.5	311.7	311.6	313.6	311.7	311.6	311.6
11	4.288	284.6	1.567	314.5	314.7	313.8	314.8	313.3	314.3	311.4	312.0	311.6	313.5	311.6	311.6	311.6
12	4.127	284.2	1.624	314.5	314.6	313.8	314.6	312.7	314.2	311.6	311.6	311.7	313.3	312.0	311.8	311.9
13	3.997	283.7	1.643	314.4	314.5	313.8	314.6	312.7	314.1	311.4	311.6	311.6	313.2	311.8	311.5	311.7
14	3.859	283.1	1.672	314.2	314.2	313.7	314.5	312.5	313.8	311.4	311.3	311.6	313.1	311.7	311.3	311.5
15	3.731	282.8	1.719	314.2	314.0	313.6	314.2	312.6	313.8	311.4	311.4	311.4	312.8	311.5	311.3	311.6
16	3.618	292.3	1.730	314.0	313.8	313.5	314.1	312.2	313.7	311.0	311.1	311.1	312.8	311.3	311.0	311.2
17	3.541	291.5	1.772	313.8	313.7	313.4	313.8	311.8	313.4	311.0	311.1	311.1	312.4	311.3	311.1	311.3
18	3.502	287.0	1.778	313.3	313.6	313.3	313.6	312.3	313.2	310.5	310.8	311.0	312.2	310.9	310.6	310.9
19	***	***	1.790	312.9	312.7	313.0	312.9	312.0	312.5	310.2	310.4	310.8	311.7	310.6	310.2	310.4
20	***	***	1.771	312.3	312.2	312.6	312.5	311.7	312.0	310.1	310.3	310.5	311.3	310.3	309.9	310.3
21	***	***	1.771	312.3	312.0	312.4	312.3	311.6	311.6	309.8	309.8	310.0	310.9	310.0	309.5	309.9
22	***	***	1.778	312.0	311.7	312.2	312.1	311.6	311.3	309.6	309.5	309.8	310.6	309.9	309.4	309.7
23	***	***	1.774	311.7	311.4	311.9	311.8	311.4	311.2	309.4	309.5	309.7	310.3	309.7	309.1	309.5
24	***	***	1.756	311.4	311.2	311.6	311.6	311.3	310.9	309.0	309.3	309.5	309.9	309.4	308.8	309.1
25	***	***	1.769	311.2	310.9	311.4	311.4	311.1	310.7	308.8	309.2	309.4	309.6	309.3	308.6	308.9
26	***	***	1.787	311.0	310.8	311.2	311.1	310.9	310.4	308.5	308.9	309.3	309.4	309.1	308.3	308.7
31	***	***	1.769	310.1	309.6	310.1	310.1	310.2	309.5	307.6	308.4	308.5	308.4	308.2	307.3	307.7
36	***	***	1.754	309.5	308.8	309.3	309.5	309.4	308.8	306.9	307.6	307.7	307.6	307.6	306.4	306.8
41	***	***	1.762	308.9	308.3	308.5	308.8	308.7	308.3	306.3	306.7	307.0	307.0	307.0	305.4	306.4
46	***	***	1.762	308.2	307.5	308.1	308.2	308.0	307.9	305.8	306.2	306.3	306.4	306.4	304.8	305.6
51	***	***	1.761	307.9	306.9	307.5	307.8	307.5	307.3	305.2	305.7	305.8	305.8	305.9	304.5	305.1
56	***	***	1.740	307.5	306.6	307.0	307.3	306.9	306.9	305.1	305.4	305.3	305.3	305.7	304.4	304.9
61	***	***	1.759	307.0	306.2	306.6	306.7	306.7	306.6	304.9	305.1	305.0	305.1	305.3	304.0	304.6
66	***	***	1.756	306.6	306.0	306.2	306.5	306.4	306.3	304.6	304.8	304.8	304.9	305.1	304.0	304.5

COORDINATES

I	R (M)	THETA (DEG)	Z (M)
1	0.229	00	0.152
2	0.229	00	0.000
3	0.076	00	0.152
4	0.102	00	0.076
5	0.076	00	-0.076
6	0.152	00	0.152
7	0.229	00	0.762
8	0.229	00	0.991
9	0.076	00	0.076
10	0.229	00	-0.076
11	0.152	00	0.762
12	0.229	00	0.914
13	0.229	00	0.838

(Table Continues)

UNCLASSIFIED

Table 16H — Scaling Run 310, Test Configuration 2: Two 1.52 cm Nozzles (Continued)

5 C METER CHAMBER OBSTRUCTED GAS MIXING RUN 107

TIME (SEC)	PRESSURANT FOW - TOTAL P (BAR)	PRESSURANT FOW - TOTAL T (DEG K)	FILL-TANK P (BAR)	THERMOCOUPLES LOCATION I T(DEG K) 1	2	3	4	5	6	7	8	9	10	11	12	13
71	***	***	1.756	306.4	305.8	305.9	306.2	306.2	305.9	304.4	304.5	304.6	304.8	304.9	303.8	304.3
76	***	***	1.744	306.1	305.5	305.8	305.9	305.9	305.7	304.2	304.4	304.5	304.5	304.7	303.8	304.1
86	***	***	1.777	305.8	305.2	305.4	305.5	305.7	305.3	303.8	304.0	304.0	304.3	304.2	303.5	303.8
96	***	***	1.762	305.3	305.1	305.2	305.2	305.3	305.2	303.8	303.8	303.8	303.9	304.0	303.3	303.6
106	***	***	1.762	305.1	304.8	304.9	304.8	305.1	304.9	303.5	303.4	303.6	303.8	303.8	303.1	303.4
116	***	***	1.772	304.9	304.5	304.6	304.6	305.1	304.8	303.1	303.3	303.3	303.5	303.5	303.1	303.3
126	***	***	1.759	304.8	304.5	304.5	304.5	305.0	304.5	303.1	303.1	303.1	303.5	303.3	302.9	303.1
136	***	***	1.763	304.5	304.4	304.5	304.4	304.9	304.5	302.9	303.0	303.1	303.3	303.1	302.7	302.9
146	***	***	1.762	304.5	304.2	304.4	304.2	304.9	304.4	302.8	302.9	302.9	303.1	303.0	302.6	302.7
156	***	***	1.756	304.4	304.1	304.4	304.1	304.8	304.2	302.7	302.7	302.9	303.1	302.9	302.5	302.7
166	***	***	1.759	304.2	304.0	304.2	304.0	304.5	304.2	302.6	302.6	302.8	303.1	302.8	302.4	302.5
176	***	***	1.760	304.2	303.9	304.1	303.9	304.4	304.1	302.5	302.5	302.7	303.0	302.7	302.4	302.5
186	***	***	1.769	304.0	303.9	304.1	303.8	304.2	304.0	302.5	302.5	302.6	302.9	302.6	302.4	302.4
196	***	***	1.776	304.0	303.8	304.1	303.8	304.4	304.1	302.5	302.4	302.6	302.8	302.6	302.4	302.4
206	***	***	1.757	304.0	303.8	304.0	303.8	304.3	304.0	302.4	302.4	302.6	302.8	302.6	302.4	302.4
216	***	***	1.750	303.9	303.8	304.0	303.8	304.2	304.0	302.4	302.4	302.5	302.7	302.5	302.4	302.5
226	***	***	1.751	303.9	303.8	304.0	303.7	304.0	304.0	302.4	302.4	302.5	302.7	302.5	302.4	302.4
236	***	***	1.744	303.9	303.8	304.0	303.7	304.0	304.0	302.4	302.4	302.5	302.6	302.5	302.3	302.3
246	***	***	1.740	303.9	303.6	303.9	303.6	304.0	303.9	302.3	302.3	302.4	302.6	302.5	302.3	302.4
256	***	***	1.735	303.9	303.6	303.9	303.7	304.2	303.9	302.3	302.3	302.5	302.6	302.4	302.2	302.4
266	***	***	1.733	303.8	303.7	303.9	303.6	304.2	303.9	302.4	302.3	302.5	302.6	302.4	302.2	302.4
276	***	***	1.744	303.9	303.7	303.9	303.6	304.3	303.8	302.4	302.3	302.4	302.5	302.4	302.3	302.4
286	***	***	1.751	303.8	303.6	303.9	303.6	304.4	303.8	302.3	302.3	302.4	302.6	302.4	302.3	302.3
296	***	***	1.738	303.8	303.6	303.8	303.6	304.3	303.8	302.3	302.2	302.4	302.6	302.4	302.2	302.4
306	***	***	1.731	303.8	303.6	303.8	303.5	304.3	303.8	302.3	302.2	302.3	302.6	302.4	302.2	302.4
316	***	***	1.733	303.8	303.6	303.8	303.5	304.4	303.7	302.2	302.2	302.3	302.5	302.4	302.2	302.3
326	***	***	1.731	303.8	303.6	303.8	303.5	304.4	303.7	302.3	302.2	302.4	302.5	302.3	302.1	302.3
336	***	***	1.742	303.8	303.5	303.8	303.5	304.4	303.8	302.2	302.2	302.4	302.4	302.3	302.2	302.3
346	***	***	1.746	303.8	303.6	303.8	303.5	304.4	303.8	302.2	302.2	302.4	302.5	302.3	302.2	302.2

Table 16I — Scaling Run 311, Test Configuration 2: Two 1.52 cm Nozzles

5 C METER CHAMBER OBSTRUCTED GAS MIXING RUN 311

TIME (SEC)	PRESSURANT FOW - P (BAR)	PRESSURANT FOW - TOTAL, T (DEG K)	FILL-TANK P (BAR)	THERMOCOUPLES LOCATION I T(DEG K) 1	2	3	4	5	6	7	8	9	10	11	12	13
-5	***	***	1.052	303.0	302.8	302.7	302.9	302.3	302.9	301.2	301.3	301.0	301.8	301.5	301.2	301.3
-4	***	***	1.054	303.0	302.8	302.7	302.9	302.3	302.9	301.2	301.3	301.0	301.8	301.5	301.2	301.3
-3	***	***	1.062	303.0	302.7	302.7	302.9	302.3	302.9	301.2	301.3	301.0	301.8	301.4	301.1	301.2
-2	***	***	1.040	302.9	302.8	302.8	302.9	302.3	302.9	301.3	301.3	301.0	301.7	301.5	301.1	301.3
-1	***	***	1.076	303.0	302.8	302.7	302.9	302.3	302.9	301.2	301.3	301.1	301.8	301.5	301.2	301.2
0	6.401	294.5	1.049	302.9	302.8	302.7	302.9	302.3	303.0	301.2	301.4	301.0	301.8	301.5	301.1	301.3
1	6.251	306.0	1.087	305.5	305.2	303.1	305.2	304.7	305.8	302.4	304.8	303.8	304.3	303.9	303.5	303.1
2	6.007	296.3	1.157	308.4	308.4	304.5	308.4	307.3	308.9	306.8	308.8	307.1	308.0	307.5	307.5	307.1
3	5.759	293.7	1.195	311.4	311.9	307.3	311.7	310.3	311.6	309.3	310.9	309.5	310.6	310.0	309.8	309.7
4	5.524	292.2	1.270	313.4	313.8	309.4	313.9	312.3	313.5	311.0	312.0	311.2	312.3	311.3	311.3	311.2
5	5.303	291.3	1.339	314.5	314.8	310.7	314.9	313.1	314.3	311.7	312.6	312.0	313.5	312.2	312.0	311.9
6	5.173	290.5	1.341	315.0	315.5	312.2	315.7	314.0	315.0	312.4	313.1	312.4	314.0	312.7	312.4	312.3
7	4.962	289.5	1.398	315.3	315.6	313.3	315.8	314.2	315.4	312.5	313.0	312.8	314.4	312.9	312.7	312.7
8	4.767	289.0	1.460	315.6	316.0	313.9	316.0	314.4	315.6	312.9	313.2	312.9	314.7	313.1	313.0	313.0
9	4.604	288.3	1.481	315.9	316.0	314.4	316.2	314.5	315.7	312.6	313.3	313.0	314.8	313.1	313.0	312.9
10	4.424	287.5	1.548	315.8	316.0	314.7	316.1	313.9	315.5	312.5	313.3	312.9	314.8	312.9	312.8	312.8
11	4.326	287.3	1.556	315.7	315.9	314.9	316.0	314.0	315.5	312.6	313.3	312.8	314.7	312.9	313.2	313.1
12	4.173	286.7	1.589	315.8	315.8	315.0	315.9	313.9	315.6	312.8	313.2	313.0	314.7	313.2	313.1	313.2
13	4.030	286.2	1.636	315.7	315.6	315.0	315.8	314.1	315.3	312.6	312.8	312.9	314.5	313.1	312.8	312.9
14	3.893	285.5	1.677	315.5	315.5	315.0	315.6	314.1	315.2	312.4	312.6	312.5	314.4	312.8	312.5	312.8
15	3.753	285.0	1.724	315.2	315.2	314.9	315.3	313.7	315.0	312.4	312.6	312.3	314.3	312.7	312.4	312.5
16	3.684	284.6	1.719	315.2	315.3	314.8	315.4	314.0	314.9	312.2	312.4	312.3	314.1	312.6	312.3	312.4
17	3.566	293.9	1.766	315.0	314.9	314.7	315.2	313.6	314.7	312.2	312.1	312.2	314.0	312.4	312.1	312.3
18	3.520	289.8	1.799	314.9	314.8	314.6	315.0	313.8	314.7	312.0	311.7	312.3	313.6	312.2	311.7	312.0
19	3.535	289.5	1.773	314.3	314.2	314.4	314.4	313.4	313.8	311.6	311.9	312.0	313.1	312.0	311.6	312.0
20	***	***	1.772	313.8	313.7	314.0	313.8	313.2	313.4	311.2	311.3	311.6	312.6	311.6	311.0	311.4
21	***	***	1.776	313.6	313.4	313.8	313.8	313.1	313.2	311.0	311.1	311.3	312.3	311.3	310.9	311.2
22	***	***	1.770	313.3	313.2	313.7	313.3	312.9	312.8	310.9	310.8	311.0	312.2	311.0	310.3	310.9
23	***	***	1.774	312.9	312.7	313.2	313.1	312.5	312.5	310.6	310.6	310.7	311.8	310.8	310.0	310.6
24	***	***	1.771	312.8	312.5	312.9	312.9	312.4	312.3	310.2	310.4	310.6	311.6	310.6	309.8	310.3
25	***	***	1.774	312.6	312.4	312.6	312.8	312.3	312.1	310.0	310.2	310.6	311.4	310.3	309.5	310.0
26	***	***	1.767	312.5	312.3	312.5	312.7	312.3	311.9	309.8	310.1	310.4	311.2	310.2	309.2	309.9
27	***	***	1.746	312.3	312.0	312.3	312.4	312.1	311.8	309.5	309.8	310.3	311.0	310.0	308.9	309.6
32	***	***	1.779	311.7	311.0	311.5	311.7	311.4	310.9	308.8	308.8	309.5	309.8	309.2	307.8	308.5
37	***	***	1.754	311.0	309.9	310.7	310.9	310.7	310.2	308.2	308.3	308.8	308.7	308.7	307.5	308.1
42	***	***	1.740	310.1	308.9	309.8	309.8	309.9	309.5	307.9	308.0	308.1	307.8	308.3	306.9	307.8
47	***	***	1.738	309.1	308.1	309.0	309.8	309.2	308.5	307.2	307.5	307.5	307.1	307.8	306.3	307.3
52	***	***	1.756	308.7	308.0	308.4	308.5	308.7	308.1	306.8	306.7	306.9	306.8	307.2	305.7	306.6
57	***	***	1.768	308.4	307.8	308.1	308.3	308.4	308.0	306.4	306.1	306.4	306.6	306.8	305.3	306.2
62	***	***	1.773	308.1	307.5	307.7	308.1	308.1	307.5	306.1	305.8	306.0	306.4	306.4	305.1	305.8
67	***	***	1.774	307.8	307.0	307.3	307.6	307.9	307.1	305.8	305.8	305.8	305.9	306.1	305.0	305.5
72	***	***	1.762	307.5	306.7	307.0	307.2	307.6	307.0	305.5	305.5	305.7	305.7	305.9	305.1	305.3
77	***	***	1.761	307.1	306.6	306.8	306.9	307.3	306.7	305.3	305.3	305.5	305.5	305.9	304.8	305.2
87	***	***	1.757	306.7	306.2	306.6	306.6	306.9	306.6	305.0	304.9	305.1	305.1	305.5	304.5	304.9

COORDINATES

I	R (M)	THETA (DEG)	Z (M)
1	0.229	00	0.152
2	0.229	00	0.000
3	0.076	00	0.152
4	0.102	00	0.076
5	0.076	00	-0.076
6	0.152	00	0.152
7	0.229	00	0.762
8	0.229	00	0.991
9	0.076	00	0.076
10	0.229	00	-0.076
11	0.152	00	0.762
12	0.229	00	0.914
13	0.229	00	0.638

UNCLASSIFIED

Table 17A — Inferred Pressurant Distribution, Scaling Run 300: Test Configuration 2

INFERRED PRESSURANT DISTRIBUTION - 5 C METER CHAMBER OBSTRUCTED GAS MI

TIME (SEC)	TEMP(DEG C) MEAN	AIR	PRESSURANT	BETA	BETA/TSTAR	PRESSURANT FRACTION MEAN	I = 1	2	3	4	5	6	7	8	9	10	11	12	13
CONMENCE VALVE OPENING																			
0.0	27 4	27 4	32.6	.3	0.0000	0.000	0.000	0.000	0.000	0.000	0.000	0.000	0.000	0.000	0.000	0.00	0 000	0.000	
1.0	28.5	28.5	24.2	-106.0	-.8246	.008	.070	.116	.231	.139	.070	.001	.047	-.230	-.092	-.09	-.092	-.069	.001
VALVE FULLY OPEN																			
2.0	32.2	32.5	27.8	34.7	1.7805	.057	.057	.036	.781	.079	.185	-.028	.079	-.240	-.028	-.09	-.028	-.091	.036
3.0	34.7	35.4	27.7	19.3	.8254	.097	.141	.063	.648	.076	.193	.089	.089	-.106	.011	-.04	.011	.024	.063
4.0	36.7	38.0	27.9	15.3	.6515	.134	.118	.079	.504	.079	.168	.099	.148	.029	.118	.05	.148	.079	.119
5.0	38.0	39.8	28.2	7.7	.1606	.152	.088	.054	.418	.036	.149	.114	.201	.123	.184	.10	.192	.140	.175
6.0	38.6	40.9	28.4	16.5	.5212	.179	.121	.089	.378	.081	.170	.121	.210	.186	.202	.12	.234	.194	.218
7.0	39.0	41.9	28.8	18.1	.9310	.220	.172	.133	.340	.133	.202	.179	.271	.225	.256	.16	.279	.241	.264
8.0	39.3	42.4	29.0	13.9	.1842	.230	.190	.161	.310	.161	.235	.205	.280	.228	.258	.17	.288	.243	.258
9.0	39.4	42.9	29.4	17.9	.7107	.260	.204	.189	.300	.189	.270	.219	.307	.293	.300	.19	.330	.285	.300
10.0	39.5	43.1	29.5	16.2	.1487	.267	.217	.202	.298	.202	.253	.239	.327	.283	.305	.22	.312	.298	.312
11.0	39.4	43.3	29.7	18.3	.5721	.290	.248	.219	.292	.226	.314	.256	.337	.307	.329	.22	.351	.322	.337
12.0	39.3	43.6	30.1	18.1	.7166	.317	.278	.256	.286	.256	.367	.278	.375	.330	.345	.27	.367	.345	.360
13.0	39.3	43.6	30.1	20.0	.1286	.322	.292	.277	.285	.277	.359	.307	.352	.337	.352	.27	.367	.344	.352
14.0	39.2	43.8	30.5	18.2	.6603	.346	.317	.287	.309	.287	.377	.324	.384	.369	.384	.29	.407	.369	.384
15.0	39.0	43.7	30.5	20.5	.2421	.353	.320	.305	.320	.305	.381	.328	.396	.381	.388	.31	.404	.373	.381
CONMENCE VALVE CLOSURE																			
16.0	38.9	43.8	30.7	18.4	.4659	.370	.331	.315	.338	.308	.407	.346	.407	.407	.400	.33	.415	.392	.400
17.0	38.9	43.7	30.7	8.2	.0641	.371	.330	.315	.345	.322	.415	.345	.422	.407	.399	.33	.407	.392	.392
VALVE FULLY CLOSED																			
18.0	38.6	43.3	31.3	71.9	.5614	.387	.337	.337	.345	.320	.412	.370	.428	.453	.420	.33	.428	.420	.420
19.0	37.4	41.7	30.6	37.1	.2894	.387	.330	.330	.321	.321	.375	.384	.429	.465	.402	.35	.438	.447	.429
20.0	36.9	41.0	30.4	17.3	.1352	.387	.356	.356	.310	.347	.356	.385	.441	.450	.403	.33	.431	.431	.422
21.0	39.9	44.9	31.9	-87.1	-.6804	.387	.359	.359	.328	.359	.344	.413	.413	.436	.397	.35	.420	.426	.420
22.0	33.9	37.0	29.0	201.6	1.5731	.387	.341	.341	.291	.341	.304	.417	.429	.480	.404	.34	.429	.480	.429
23.0	36.4	40.3	30.2	-101.9	-.7961	.387	.356	.366	.326	.356	.326	.396	.416	.446	.386	.36	.416	.456	.416
24.0	39.9	44.8	32.0	-105.0	-.8202	.387	.362	.393	.346	.362	.339	.401	.409	.417	.386	.37	.401	.425	.409
25.0	36.4	40.3	30.2	105.0	.8202	.387	.354	.384	.324	.354	.324	.424	.414	.424	.384	.39	.394	.443	.414
26.0	33.9	37.0	29.0	101.9	.7961	.387	.344	.394	.332	.357	.306	.420	.407	.420	.382	.40	.394	.445	.420
27.0	36.5	40.5	30.3	-108.0	-.8433	.387	.371	.400	.341	.361	.312	.420	.400	.410	.371	.43	.381	.430	.400
28.0	35.5	39.1	29.8	39.2	.3063	.387	.355	.408	.333	.365	.322	.430	.397	.397	.376	.43	.367	.430	.397
29.0	38.3	42.8	31.2	-94.9	-.7412	.387	.366	.409	.349	.366	.340	.418	383	.392	.366	.43	.375	.427	.401
30.0	35.3	38.9	29 7	101.8	.7949	.387	.365	419	.343	.376	.310	.430	.387	.387	.354	.43	.365	.452	.409
31.0	33.7	36.8	29.0	71.2	.5560	.387	.361	.438	.348	.361	.297	.438	.374	.400	.348	.43	.348	.477	.400
32.0	35.8	39.6	30.0	-91.5	-.7149	.387	.359	.422	.349	.359	.307	.432	.370	.401	.359	.44	.380	.453	.391
33.0	35.3	38.9	29.7	20.7	.1614	.387	.352	.418	.352	.352	.287	.440	.363	.418	.363	.44	.363	.472	.407
34.0	36.2	40.0	30.1	-33.7	-.2633	.387	.363	.423	.352	.363	.292	.444	.373	.413	.352	.43	.352	.464	.403
35.0	34.6	37.9	29.4	63.4	.4949	.387	.344	.425	.355	.355	.274	.449	.379	.414	.355	.42	.344	.495	.414
36.0	35.5	39.1	29.8	-36.8	-.2876	.387	.351	.405	.351	.362	.265	.426	.383	.426	.362	.43	.351	.491	.416
37.0	35.0	38.4	29.5	21.6	.1687	.387	.355	.423	.367	.367	.265	.423	.355	.412	.367	.42	.344	.502	.423
38.0	33.6	36.5	28.9	65.7	.5133	.387	.333	.412	.360	.346	.255	.425	.386	.412	.360	.43	.346	.517	.438
39.0	35.7	39.3	29.9	-93.7	-.7323	.387	.344	.407	.354	.354	.280	.418	.386	.418	.375	.42	.344	.492	.428
40.0	35.0	38.4	29.5	28.5	.2224	.387	.335	.414	.357	.346	.278	.436	.380	.425	.357	.42	.346	.504	.425
41.0	31.1	33.1	28.0	220.3	1.7206	.387	.310	.408	.330	.310	.174	.466	.369	.486	.349	.44	.310	.622	.447
42.0	36.9	40.9	30.5	-281.9	-2.2020	.387	.345	.393	.365	.345	.278	.422	.384	.422	.374	.41	.355	.499	.432
43.0	35.0	38.4	29.5	72.6	.5674	.387	.355	.378	.344	.344	.265	.423	.389	.423	.367	.41	.355	.525	.446
44.0	32.7	35.3	28.5	114.1	.8913	.387	.357	.401	.328	.343	.240	.431	.401	.431	.372	.40	.328	.548	.446
45.0	35.8	39.6	30.0	-147.8	-1.1549	.387	.363	.404	.352	.352	.279	.415	.384	.404	.373	.40	.352	.509	.436
46.0	37.2	41.4	30.7	-49.3	-.3849	.387	.348	.404	.348	.348	.292	.413	.385	.413	.376	.41	.357	.497	.432
47.0	32.7	35.3	28.6	193.7	1.5129	.387	.340	.429	.340	.340	.235	.429	.370	.414	.370	.42	.355	.534	.444
48.0	35.1	38.6	29.7	-121.2	-.9468	.387	.336	.403	.358	.347	.257	.415	.392	.415	.392	.41	.369	.493	.437
49.0	37.2	41.3	30.8	-76.9	-.6004	.387	.347	.404	.366	.357	.281	.414	.385	.414	.385	.39	.366	.480	.433
50.0	32.7	35.2	28.6	193.7	1.5129	.387	.340	.416	.355	.340	.234	.446	.386	.416	370	.41	.355	.522	.431

(Table Continues)

Table 17A — Inferred Pressurant Distribution, Scaling Run 300: Test Configuration 2 (Continued)

INFERRED PRESSURANT DISTRIBUTION - 5 C METER CHAMBER OBSTRUCTED GAS MIXI

TIME (SEC)	TEMP(DEG C) MEAN	AIR	PRESSURANT	BETA	BETA/TSTAR	PRESSURANT FRACTION MEAN I = 1	2	3	4	5	6	7	8	9	10	11	12	13
VALVE FULLY CLOSED																		
51.0	33.4	36.2	29.0	-40.1	-.3129	.387	.332	.402	.360	.346	.249	.443	.388	.415	.374	.41	.360	.512	.429
52.0	36.4	40.1	30.4	-128.1	-1.0008	.387	.361	.413	.382	.372	.289	.423	.382	392	372	.39	.361	.464	.423
53.0	33.4	36.2	29.0	128.1	1.0008	.387	.352	.435	.379	.379	.255	.421	.379	.379	.365	.40	.365	.476	.435
54.0	31.3	33.3	28.1	137.3	1.0728	.387	.332	.447	.371	.390	.218	.466	.371	.371	.371	40	.352	.504	.426
55.0	35.3	38.8	29.9	-220.0	-1.7182	.387	.359	.426	.370	.382	.281	.426	.370	.393	.370	.40	.359	.460	.426
56.0	37.8	42.0	31.1	-86.2	-.6735	.387	.364	.410	.382	.382	.300	.419	.373	.392	.373	.41	.364	.438	.419
57.0	33.4	36.2	29.0	172.2	1.3451	.387	.360	.429	.388	.374	.263	.443	.360	.388	.360	.41	.360	.457	.429
58.0	30.8	32.6	27.9	181.4	1.4169	.387	.354	.461	.375	.375	.182	.461	.332	.418	.354	.44	.332	.525	.418
59.0	34.4	37.6	29.5	-228.1	-1.7817	.387	.360	.422	.372	.385	.274	.422	.360	.397	.372	.42	.360	.447	.434
60.0	35.8	39.4	30.2	-58.2	-.4549	.387	.367	.421	.378	.388	.291	.432	.356	.399	.367	.41	.356	.443	.421
61.0	33.2	35.9	28.9	118.6	.9267	.387	.365	.436	.379	.393	.265	.436	.351	.393	.365	.42	.351	.450	.422
62.0	32.7	35.2	28.7	30.5	.2384	.387	.369	.445	.384	.384	.262	.445	.354	.400	.354	.41	.339	.461	.415
63.0	34.8	38.0	29.7	-106.8	-.8341	.387	.376	.423	.388	.376	.292	.435	.364	.388	.364	.41	.352	.447	.412
64.0	36.9	40.8	30.7	-80.1	-.6255	.387	.381	.421	.381	.371	.302	.431	.371	.391	.361	.41	.352	.441	.411
65.0	34.3	37.3	29.4	103.3	.8071	.387	.376	.439	.389	.376	.275	.439	.363	.401	.351	.41	.338	.452	.414
66.0	32.9	35.5	28.8	73.2	.5720	.387	.363	.437	.392	.378	.243	.452	.363	.407	.348	.42	.333	.467	.422
67.0	32.7	35.2	28.7	10.5	.0821	.387	.353	.444	.398	.383	.261	.459	.353	.398	.353	.42	.322	.459	.414
68.0	35.3	38.7	29.9	-128.1	-1.0009	.387	.366	.423	.400	.388	.286	.434	.366	.388	.366	.42	.343	.434	.411
69.0	37.4	41.5	31.0	-75.3	-.5886	.387	.373	.421	.393	.383	.307	.421	.364	.402	.364	.41	.345	.421	.421
70.0	33.2	35.9	28.9	170.8	1.3343	.387	.377	.434	.391	.391	.276	.434	.348	.406	.348	.42	.319	.449	.434
71.0	31.1	33.0	28.1	142.4	1.1126	.387	.362	.442	.382	.402	.222	.442	.322	.422	.362	.44	.302	.482	.442
72.0	32.2	34.5	28.5	-80.1	-.6259	.387	.376	.443	.393	.410	.243	.427	.326	.427	.360	.42	.326	.460	.410
73.0	35.1	38.5	29.9	-153.4	-1.1983	.387	.371	.417	.394	.394	.289	.417	.359	.406	.371	.40	.347	.441	.417
74.0	37.2	41.2	31.0	-76.9	-.6004	.387	.370	.409	.390	.390	.302	.409	.360	.419	.370	.40	.360	.439	.409
75.0	33.0	35.6	28.9	174.7	1.3647	.387	.362	.421	.391	.391	.257	.421	.347	.436	.362	.40	.347	.466	.421
76.0	30.1	31.5	27.8	231.8	1.8111	.387	.354	.461	.407	.381	.194	.461	.301	.461	.354	.40	.301	.541	.407
77.0	34.8	38.0	29.8	-303.5	-2.3712	.387	.369	.418	.393	.381	.295	.418	.357	.418	.369	.39	.357	.455	.406
78.0	36.7	40.5	30.8	-74.2	-.5794	.387	.372	.413	.382	.382	.310	.413	.361	.413	.372	.39	.361	.444	.413
79.0	36.9	40.7	30.9	-6.0	-.0468	.387	.378	.409	.388	.388	.317	.409	.358	.419	.368	.38	.358	.439	.409
80.0	32.9	35.4	28.9	173.3	1.3541	.387	.383	.429	.383	.383	.275	.414	.352	.429	.352	.39	.337	.476	.414
81.0	29.9	31.2	27.7	242.2	1.8918	.387	.363	.477	.391	.363	.191	.420	.305	.448	.363	.42	.305	.563	.420
82.0	35.7	39.1	30.3	-346.7	-2.7080	.387	.374	.419	.396	.385	.306	.408	.362	.396	.374	.40	.351	.442	.408
83.0	34.3	37 3	29 5	59.6	.4655	.387	.367	.419	.393	.380	.289	.419	.367	.406	.367	.40	.341	.457	.419
84.0	31.5	33.5	28.3	165.4	1.2917	.387	.368	.444	.387	.387	.253	.425	.348	.406	.368	.40	.329	.483	.425
85.0	35.3	38.6	30.1	-207.3	-1.6193	.387	.371	.418	.395	.383	.313	.406	.360	.395	.371	.40	.360	.442	.406
86.0	34.3	37.3	29.5	45.8	.3575	.387	.366	.418	.392	.392	.301	.418	.353	.392	.366	.41	.353	.443	.418
87.0	32.3	34.7	28.6	105.2	.8217	.387	.375	.425	.392	.392	.276	.425	.359	.392	.359	.42	.342	.456	.408
88.0	29.9	31.3	27.7	213.7	1.6694	.387	.361	.445	.389	.417	.194	.473	.305	.389	.361	.44	.333	.500	417
89.0	31.8	33.9	28.5	-180.8	-1.4128	.387	.378	.433	.397	.415	.269	.433	.324	.397	.360	.41	.360	.451	.397
90.0	35.0	38.1	30.0	-169.6	-1.3249	.387	.377	.414	.390	.402	.304	.414	.365	.402	.365	.40	.365	.426	.402
91.0	33.9	36.7	29.4	48.0	.3753	.387	.375	.416	.389	.402	.307	.416	.362	.389	.362	.41	.362	.430	.402
92.0	32.2	34.4	28.6	100.1	.7821	.387	.380	.414	.397	.414	.277	.432	.346	.397	.363	.41	.363	.432	.397
93.0	30.2	31.8	27.8	164.0	1.2811	.387	.375	.451	.400	.426	.223	.451	.324	.400	.350	.45	.350	.451	.375
94.0	32.5	34.9	28 8	-185.2	-1.4466	.387	.392	.424	.392	.408	.277	.424	.343	.392	.375	.42	.359	.424	.392
95.0	35.5	38.8	30.2	-145.2	-1.1344	.387	.397	.420	.385	.397	.303	.408	.362	.397	.373	.40	.362	.408	.408
96.0	37.1	40.8	31.1	-57.1	-.4458	.387	.392	.413	.382	.403	.310	.403	.361	.403	382	.40	.372	.403	.403
97.0	32.0	34.1	28.6	229.4	1.7916	.387	.394	.430	.394	.412	.248	.430	.357	.394	.357	.43	.357	.412	.412
98.0	33.4	36.0	29.3	-85.4	-.6674	.387	.390	.435	.390	.405	.270	.420	.360	.375	.375	.43	.360	.405	.405
99.0	34.8	37.8	30.0	-67.4	-.5268	.387	.397	.422	.397	.397	.294	.410	.358	.397	.371	.42	.358	.397	.410
100.0	32.3	34.6	28.8	128.1	1.0010	.387	.401	.436	.401	.419	.263	.419	.349	.401	.367	.43	.349	.401	.384

UNCLASSIFIED

Table 17B — Inferred Pressurant Distribution, Scaling Run 301: Test Configuration 2

INFERRED PRESSURANT DISTRIBUTION - 5 C METER CHAMBER OBSTRUCTED GAS MI

TIME (SEC)	TEMP(DEG C) MEAN	AIR	PRESSURANT	BETA	BETA/TSTAR	PRESSURANT FRACTION MEAN I = 1	2	3	4	5	6	7	8	9	10	11	12	13
COMMENCE VALVE OPENING																		
0.0	28.0	28.0	13.5	-.3	0.0000	0.000	0.000	0.000	0.000	0.000	0.000	0.000	0.000	0.000	0.00	0.000	0.000	
1.0	29.1	29.0	23.5	773.7	-15.2734	-.020	.052	.125	.181	.162	.034	.015	.107	-.333	-.187	-.15	-.131	-.095	-.040
VALVE FULLY OPEN																		
2.0	32.0	32.2	27.5	62.8	3.7372	.039	.067	.088	.727	.109	.237	-.040	.067	-.359	-.061	-.10	-.040	-.146	-.040
3.0	35.1	35.7	27.1	11.7	.4556	.076	.026	-.021	.525	-.021	.119	.002	.142	-.056	.049	.00	.084	.037	.095
4.0	37.2	38.7	27.1	19.6	1.2476	.133	.103	.042	.431	.025	.137	.068	.181	.068	.155	.09	.163	.112	.146
5.0	38.4	40.3	27.5	10.4	.2357	.152	.101	.077	.413	.062	.163	.093	.194	.124	.171	.10	.179	.147	.155
6.0	39.1	41.6	27.9	15.6	.5263	.180	.139	.102	.364	.095	.182	.146	.219	.175	.189	.13	.197	.197	.204
7.0	39.6	42.6	28.3	16.8	.6394	.211	.166	.152	.334	.145	.194	.173	.257	.229	.215	.16	.236	.229	.243
8.0	39.8	43.0	28.5	16.0	.2505	.223	.186	.165	.324	.158	.220	.186	.268	.248	.241	.16	.262	.241	.241
9.0	39.8	43.5	29.1	18.2	.8606	.259	.209	.188	.326	.181	.257	.209	.319	.271	.292	.20	.319	.292	.306
10.0	39.9	43.8	29.3	17.1	.3020	.272	.234	.220	.303	.206	.275	.227	.324	.303	.296	.22	.317	.303	.303
11.0	39.9	43.9	29.4	17.4	.1816	.280	.243	.229	.291	.215	.284	.243	.332	.319	.312	.22	.325	.312	.305
12.0	39.8	44.3	29.9	18.0	.8174	.312	.255	.241	.318	.234	.325	.276	.373	.353	.346	.26	.373	.346	.353
13.0	39.6	44.2	30.1	19.6	.3620	.324	.276	.269	.318	.262	.340	.290	.382	.354	.361	.26	.375	.361	.361
14.0	39.6	44.3	30.3	18.2	.3680	.338	.292	.292	.328	.285	.371	.314	.378	.356	.378	.28	.385	.356	.371
15.0	39.5	44.4	30.5	18.4	.4085	.352	.301	.308	.337	.308	.373	.330	.394	.387	.387	.30	.394	.373	.380
COMMENCE VALVE CLOSURE																		
16.0	39.4	44.4	30.6	19.5	.3267	.363	.323	.308	.337	.308	.381	.345	.403	.410	.396	.31	.403	.396	.396
17.0	39.1	44.1	30.9	-26.5	.5175	.378	.332	.317	.347	.317	.385	.363	.431	.416	.416	.32	.423	.423	.423
VALVE FULLY CLOSED																		
18.0	38.8	43.7	30.8	-3.9	.0765	.379	.327	.311	.342	.311	.374	.358	.451	.420	.405	.34	.436	.420	.428
19.0	40.1	45.4	31.4	13.8	-.2691	.379	.355	.333	.333	.340	.355	.369	.434	.419	.398	.34	.419	.412	.419
20.0	39.2	44.2	31.0	-9.7	.1893	.379	.353	.361	.331	.346	.353	.391	.437	.399	.384	.33	.414	.406	.414
21.0	42.4	48.4	32.5	31.7	-.6204	.379	.368	.362	.343	.356	.349	.375	.425	.406	.375	.34	.406	.412	.406
22.0	38.7	43.5	30.8	-37.8	.7390	.379	.360	.344	.337	.344	.329	.384	.439	.415	.376	.34	.415	.423	.415
23.0	35.0	38.5	29.2	-53.7	1.0492	.379	.351	.340	.319	.319	.308	.394	.469	.415	.383	.32	.426	.437	.437
24.0	38.8	43.7	30.9	55.7	-1.0883	.379	.364	.356	.341	.341	.317	.395	.442	.395	.364	.34	.418	.434	.418
25.0	41.8	47.7	32.3	31.0	-.6068	.379	.364	.351	.345	.338	.319	.397	.436	.403	.364	.34	.410	.423	.429
26.0	34.8	38.2	29.3	-87.4	1.7083	.379	.358	.347	.313	.325	.269	.403	.481	.403	.358	.32	.437	.459	.448
27.0	38.5	43.1	30.9	54.8	-1.0706	.379	.364	.356	.331	.339	.299	.396	.454	.388	.364	.33	.413	.445	.437
28.0	40.4	45.7	31.8	21.6	-.4228	.379	.358	.366	.337	.344	.301	.394	.438	.402	.351	.35	.409	.438	.438
29.0	37.8	42.2	30.6	-30.4	.5949	.379	.352	.378	.327	.335	.275	.378	.447	.404	.344	.36	.421	.455	.447
30.0	38.0	42.4	30.6	2.3	-.0446	.379	.337	.396	.328	.328	.277	.379	.438	.404	.345	.37	.413	.464	.447
31.0	37.1	41.3	30.2	-11.8	.2313	.379	.342	.387	.324	.333	.269	.378	.442	.396	.342	.36	.405	.476	.460
32.0	36.4	40.3	29.9	-10.3	.2019	.379	.328	.405	.338	.328	.261	.376	.434	.395	.338	.37	.414	.482	.453
33.0	40.4	45.7	31.8	49.8	-.9739	.379	.336	.393	.343	.343	.293	.379	.422	.393	.343	.37	.400	.456	.444
34.0	37.3	41.5	30.3	-37.4	.7313	.379	.338	.391	.338	.338	.275	.391	.418	.391	.338	.38	.391	.489	.445
35.0	37.4	41.7	30.4	2.4	-.0472	.379	.335	.379	.344	.326	.264	.396	.423	.405	.344	.38	.388	.493	.441
36.0	36.4	40.3	29.9	-15.2	.2968	.379	.342	.390	.352	.332	.256	.400	.419	.400	.342	.38	.380	.495	.438
37.0	38.0	42.4	30.6	22.1	-.4324	.379	.348	.390	.348	.348	.280	.415	.415	.398	.339	.36	.373	.483	.424
38.0	37.8	42.2	30.5	-2.3	.0446	.379	.345	.387	.345	.345	.276	.405	.413	.396	.345	.37	.379	.482	.439
39.0	37.8	42.2	30.5	0.0	0.0000	.379	.341	.384	.350	.341	.273	.401	.418	.401	.350	.37	.376	.478	.436
40.0	38.5	43.1	30.9	8.9	-.1738	.379	.351	.391	.359	.343	.277	.383	.424	.400	.351	.38	.367	.473	.424
41.0	36.9	41.0	30.1	-20.9	.4088	.379	.351	.387	.351	.341	.259	.378	.424	.387	.360	.38	.378	.479	.442
42.0	38.0	42.4	30.6	14.3	-.2802	.379	.352	.377	.352	.343	.267	.385	.419	.385	.360	.38	.385	.478	.436
43.0	40.1	45.2	31.6	24.5	-.4797	.379	.353	.375	.353	.353	.294	.382	.419	.382	.353	.37	.390	.463	.434
44.0	36.2	40.1	29.9	-48.9	.9559	.379	.347	.367	.357	.338	.269	.386	.435	.377	.357	.37	.386	.474	.455
45.0	35.9	39.6	29.7	-5.6	.1098	.379	.333	.373	.353	.343	.262	.384	.424	.373	.363	.38	.394	.495	.444
46.0	39.2	44.1	31.2	45.0	-.8790	.379	.340	.379	.363	.348	.309	.379	.418	.379	.363	.37	.379	.457	.433
47.0	35.3	38.9	29.5	-53.6	1.0468	.379	.311	.385	.354	.332	.279	.364	.428	.385	.364	.39	.385	.492	.449
48.0	33.0	35.7	28.6	-47.4	.9275	.379	.311	.381	.353	.325	.241	.367	.451	.395	.353	.39	.381	.521	.451
49.0	38.5	43.2	30.8	90.0	-1.7598	.379	.338	.395	.355	.346	.298	.371	.419	.379	.363	.38	.379	.460	.436
50.0	36.7	40.8	30.0	-23.4	.4584	.379	.323	.397	.351	.342	.286	.370	.425	.388	.360	.38	.379	.472	.444

(Table Continues)

Table 17B — Inferred Pressurant Distribution, Scaling Run 301: Test Configuration 2 (Continued)

INFERRED PRESSURANT DISTRIBUTION - 5 C METER CHAMBER OBSTRUCTED GAS MIXI

TIME (SEC)	TEMP(DEG C) MEAN	AIR	PRESSURANT	BETA	BETA/TSTAR	PRESSURANT FRACTION MEAN I = 1	2	3	4	5	6	7	8	9	10	11	12	13
VALVE FULLY CLOSED																		
51.0	35.3	38.9	29.4	-22.5	.4392	.379	.308	.403	.351	.329	.287	.361	.424	.382	.372	.39	.382	.487	.445
52.0	40.1	45.3	31.6	62.7	-1.2264	.379	.327	.386	.364	.342	.313	.371	.407	.386	.378	.38	.386	.459	.422
53.0	36.6	40.6	29.9	-43.7	.8541	.379	.318	.384	365	.328	.299	.365	.412	.393	.375	.39	.384	.478	.431
54.0	35.3	38.9	29.4	-19.9	.3886	.379	.313	.397	.365	.323	.292	.365	418	.397	.376	.39	.376	.481	.428
55.0	39.4	44.4	31.2	55.5	-1.0841	.379	.325	.394	.371	.340	.317	.371	401	.394	.371	.39	.378	.454	.416
56.0	37.4	41.8	30.3	-23.8	.4658	.379	.323	.393	.367	.332	.315	.376	.402	.393	.376	.39	.376	.463	.419
57.0	32.7	35.2	28.5	-86.2	1.6859	.379	.278	.412	.367	.308	.263	.367	.412	442	.367	.39	.367	.516	.427
58.0	37.1	41.2	30.3	81.9	-1.6010	.379	.317	.399	.372	.335	.308	.372	.399	.408	.381	.39	.363	.454	.427
59.0	38.5	43.1	30.9	18.4	-.3601	.379	.328	.393	.377	.344	.320	.377	.393	.402	.369	.38	.369	.451	.418
60.0	35.7	39.4	29.7	-39.7	.7761	.379	.321	.393	.373	.342	.311	.383	.393	.393	.373	.39	.362	465	.424
61.0	34.4	37.7	29.1	-22.4	.4371	.379	.311	.393	.370	.346	.300	.382	.393	.417	.370	.39	.358	.463	.428
62.0	38.7	43.4	31.0	63.2	-1.2361	.379	.332	.389	.373	.357	.324	.381	.389	.405	.365	.38	.373	.437	.413
63.0	39.9	45.0	31.6	14.0	-.2733	.379	.338	.390	.375	.367	.330	.390	.382	.397	.367	.39	.367	.427	.405
64.0	35.5	39.1	29.6	-58.1	1.1356	.379	.328	.401	.370	.359	.307	.401	.380	.401	.359	.40	.359	.443	.412
65.0	34.4	37.7	29.1	-19.4	.3794	.379	.319	.413	.366	.366	.308	.401	378	.390	.355	.41	.366	.448	.401
66.0	38.3	42.9	30.8	59.2	-1.1570	.379	.347	.397	.380	.372	.330	.397	.372	.388	.364	.40	.364	.413	.397
67.0	36.7	40.8	30.1	-21.3	.4164	.379	.349	.406	.377	.377	.321	.406	.377	.387	.359	.40	.359	.406	.396
68.0	34.3	37.4	29.1	-42.1	.8228	.379	.347	.418	.371	.383	.299	.406	.383	.394	.347	.41	.347	.418	.394
69.0	34.6	37.9	29.2	7.0	-.1369	.379	.357	.426	.368	.380	.299	.414	.368	.391	.357	.40	.345	.426	.391
70.0	39.0	43.8	31.2	63.9	-1.2490	.379	.365	.404	.365	.373	.333	.404	.373	.389	.365	.39	.357	.404	.396
71.0	35.3	38.9	29.5	-51.6	1.0089	.379	.367	.410	.367	.378	.314	.410	.378	.378	.357	.41	.346	.410	.399
72.0	33.9	37.0	28.9	-27.3	.5328	.379	.369	.432	.369	.382	.295	.419	.369	.382	.344	.41	.344	.432	.369
73.0	36.4	40.3	29.9	44.2	-.8634	.379	.365	.413	.384	.384	.317	.403	.384	.374	.355	.40	.345	.413	.384
74.0	38.3	42.9	30.8	26.5	-.5185	.379	.365	.407	.382	.382	.324	.407	.382	.374	.357	.39	.349	.407	.390
75.0	35.2	38.6	29.4	-46.5	.9084	.379	.359	.413	.381	.381	.315	.413	.381	.370	.348	.41	.348	.413	.391
76.0	34.3	37.4	29.1	-16.8	.3286	.379	.376	.412	.376	.388	.304	.412	.388	.364	.364	.40	.340	.412	.388
77.0	38.7	43.4	31.0	66.6	-1.3010	.379	.372	.396	.380	.380	.324	.404	.380	.372	.364	.39	.364	.404	.388
78.0	37.6	42.0	30.5	-13.3	.2607	.379	.370	.396	.379	.379	.318	.405	.379	.370	.370	.39	.353	.414	.396
79.0	35.2	38.7	29.4	-37.7	.7362	.379	.364	.396	.396	.386	.310	.407	.375	.364	364	.39	.353	.418	.396
80.0	35.7	39.4	29.6	9.1	-.1784	.379	.369	.399	.389	.379	.307	.399	.369	.379	.369	.39	.358	.410	.399
81.0	38.5	43.1	30.9	39.7	-.7761	.379	.369	.393	.385	.377	328	.393	.377	.385	369	.39	.361	.402	.393
82.0	36.0	39.8	29.8	-34.1	.6662	.379	.371	.391	.381	.381	.322	.391	.381	.381	.361	.40	.361	.411	.391
83.0	33.7	36.7	28.8	-42.6	.8325	.379	.364	.402	.377	.390	.301	.402	.390	.390	.352	.40	.352	.415	.390
84.0	34.1	37.2	29.0	7.6	-.1491	.379	.377	.401	.377	.389	.304	.401	.389	.389	.365	.38	.353	.413	.377
85.0	38.7	43.4	31.0	69.9	-1.3673	.379	.373	.389	.381	.389	.324	.389	.381	.389	.365	.38	.365	405	.389
86.0	37.3	41.5	30.3	-18.1	.3537	.379	.369	.386	.386	.386	.315	.395	.378	.386	.360	.39	.369	.404	.395
87.0	33.2	36.0	28.7	-71.7	1.4011	.379	.361	.402	.388	.388	.292	.402	.375	.402	.361	.38	.361	.416	.388
88.0	34.4	37.7	29.2	27.1	-.5297	.379	.382	.405	.382	.382	.299	.405	.382	.393	.358	.39	.358	.417	.370
89.0	37.3	41.5	30.4	45.9	-.8981	.379	.377	.396	.377	.377	.323	.396	.387	.387	.359	.38	.359	.405	.396
90.0	39.6	44.5	31.5	28.2	-.5505	.379	.375	.391	.375	.383	.329	.391	.383	.383	.360	.38	.368	.406	.398
91.0	36.0	39.8	29.8	-46.1	.9002	.379	.373	.394	.384	.384	.313	.404	.384	.394	.353	.38	.353	.414	.394
92.0	33.9	36.9	29.0	-38.8	.7588	.379	.380	.405	.392	.380	.292	.405	.392	.380	.342	.39	.355	.417	.392
93.0	35.3	38.9	29.5	27.3	-.5328	.379	.378	.400	.389	.378	.303	.400	.389	.378	.357	.38	.357	.410	.400
94.0	35.0	38.4	29.4	-6.3	.1234	.379	.373	.406	.384	.384	.295	.406	.384	.384	.351	.38	.373	.406	395
95.0	32.2	34.5	28.4	-64.9	1.2683	.379	.369	.402	.385	.402	.271	.418	.385	.385	.353	.38	.353	.416	.402
96.0	32.5	35.0	28 5	10.4	-.2038	.379	.381	.397	.381	.397	.273	.412	.381	.381	.350	.39	.366	.412	.397
97.0	36.0	39.8	29.9	72.0	-1.4069	.379	.376	.386	.386	.386	.305	.396	.386	.386	.366	.39	.366	.396	.396
98.0	36.9	41.0	30.3	13.3	-.2602	.379	.372	.391	.391	.391	.316	.391	.382	.382	.363	.39	.363	.400	.391
99.0	37.3	41.4	30.4	5.0	-.0970	.379	.371	.389	.389	.389	.316	.398	.380	.380	.361	.38	.371	.398	.398
100.0	39.2	44.0	31.3	24.2	-.4738	.379	.371	.387	.387	.387	.324	.395	.379	.387	363	.38	.371	.395	.395

UNCLASSIFIED

Table 17C — Inferred Pressurant Distribution, Scaling Run 302: Test Configuration 2

INFERRED PRESSURANT DISTRIBUTION - 5 C METER CHAMBER OBSTRUCTED GAS MI

TIME (SEC)	TEMP(DEG C) MEAN	AIR	PRESSURANT	BETA	BETA/TSTAR	PRESSURANT FRACTION MEAN	I = 1	2	3	4	5	6	7	8	9	10	11	12	13
COMMENCE VALVE OPENING																			
0.0	28.1	28.1	-6.7	-.1	0.0000	0.000	0.000	0.000	0.000	0.000	0.000	0.000	0.000	0.000	0.000	0.00	0.000	0.000	
1.0	29.5	29.6	24.3	-49.3	-.5496	.011	.072	.110	.241	.110	.091	.015	.034	-.229	-.079	-.07	-.041	-.079	-.022
VALVE FULLY OPEN																			
2.0	33.3	33.6	25.9	-4.7	-.1495	.042	.050	.024	.502	.024	.166	-.027	.076	-.169	-.027	-.04	-.014	-.040	.024
3.0	35.2	36.0	25.4	15.9	.4961	.072	.032	.013	.439	-.006	.098	.032	.136	-.063	.088	.00	.088	.022	.051
4.0	37.0	38.5	26.0	19.7	1.0615	.120	.101	.077	.445	.053	.149	.109	.133	.037	.109	.05	.117	.085	.101
5.0	38.3	40.5	27.0	17.5	.8811	.164	.139	.102	.405	.095	.161	.132	.191	.117	.169	.10	.198	.146	.169
6.0	39.2	41.7	27.3	6.5	.0895	.175	.135	.100	.352	.093	.184	.135	.219	.156	.198	.12	.226	.177	.177
7.0	39.5	42.7	28.1	18.0	.9355	.217	.183	.155	.347	.141	.224	.183	.265	.224	.224	.14	.258	.231	.237
8.0	39.7	42.9	28.1	52.3	-.0731	.216	.169	.142	.298	.136	.210	.169	.284	.217	.244	.14	.278	.251	.257
9.0	39.9	43.6	28.7	17.3	.7479	.249	.222	.188	.288	.188	.255	.215	.309	.275	.268	.18	.295	.268	.275
10.0	39.9	44.1	29.2	18.0	.7650	.280	.245	.231	.292	.225	.312	.245	.326	.312	.299	.22	.312	.306	.312
11.0	39.9	44.1	29.3	18.7	.1602	.286	.242	.235	.296	.221	.316	.255	.343	.303	.303	.24	.330	.316	.323
12.0	40.0	44.5	29.8	16.9	.5543	.309	.278	.264	.311	.244	.325	.284	.359	.339	.339	.25	.359	.325	.339
13.0	39.9	44.6	29.9	17.6	.2190	.318	.265	.271	.312	.251	.353	.285	.380	.346	.360	.27	.373	.333	.333
14.0	39.8	44.6	30.1	18.9	.4493	.334	.288	.288	.316	.268	.385	.309	.385	.357	.371	.28	.392	.350	.350
15.0	39.6	44.7	30.4	18.3	.5843	.355	.313	.299	.334	.285	.383	.327	.418	.390	.390	.29	.411	.383	.376
COMMENCE VALVE CLOSURE																			
16.0	39.5	44.7	30.5	19.2	.2853	.364	.328	.307	.350	.300	.406	.335	.413	.406	.392	.30	.406	.392	.392
17.0	39.4	44.5	30.8	33.1	.3713	.375	.334	.319	.348	.312	.436	.341	.429	.422	.392	.32	.414	.407	.400
VALVE FULLY CLOSED																			
18.0	39.0	43.9	30.9	27.0	.3023	.382	.330	.322	.330	.315	.415	.346	.438	.446	.400	.33	.438	.430	.423
19.0	37.2	41.6	30.2	39.2	.4396	.382	.366	.322	.314	.314	.366	.358	.445	.454	.401	.32	.436	.445	.419
20.0	36.9	41.1	30.0	8.8	.0983	.382	.364	.346	.310	.328	.353	.373	.437	.446	.392	.31	.446	.428	.419
21.0	35.8	39.7	29.6	28.6	.3201	.382	.376	.366	.326	.346	.356	.386	.465	.396	.356	.31	.445	.425	.405
22.0	40.0	45.3	31.4	-95.9	-1.0740	.382	.377	.370	.341	.362	.370	.398	.398	.406	.362	.32	.413	.442	.398
23.0	36.5	40.6	29.8	77.1	.8641	.382	.381	.381	.335	.363	.353	.409	.437	.390	353	.34	.428	.409	.381
24.0	36.7	40.9	29.9	-4.6	-.0517	.382	.357	.385	.321	.348	.348	.403	.421	.394	.366	.36	.421	.412	.421
25.0	36.7	40.9	29.9	0.0	0.0000	.382	.356	.393	.329	.356	.347	.411	.430	.366	.347	.38	.430	.420	.393
26.0	36.5	40.6	29.8	4.6	.0517	.382	.344	.390	.325	.353	.335	.400	.437	.390	.353	.37	.418	.437	.409
27.0	33.4	36.3	28.6	103.4	1.1579	.382	.333	.373	.294	.333	.294	.399	.452	.386	.360	.37	.452	.491	.425
28.0	36.5	40.6	29.9	-103.4	-1.1579	.382	.346	.374	.337	.346	.318	.402	.430	.383	.365	.36	.430	.458	.411
29.0	36.7	40.8	29.9	-4.6	-.0517	.382	.343	.389	.334	.352	.325	.407	.435	.380	.361	.36	.426	.444	.407
30.0	35.5	39.2	29.4	34.4	.3858	.382	.334	.395	.334	.344	.323	.416	.426	.364	.354	.37	.426	.457	.416
31.0	35.6	39.4	29.5	-5.3	-.0590	.382	.337	.397	.337	.347	.317	.417	.417	.387	.357	.37	.407	.458	.407
32.0	32.5	35.0	28.4	118.6	1.3288	.382	.331	.406	.331	.331	.255	.436	.421	.376	.346	.36	.421	.527	.421
33.0	35.8	39.6	29.6	-123.4	-1.3822	.382	.351	.381	.341	.341	.301	.431	.411	.371	.351	.37	.401	.481	.431
34.0	34.2	37.5	29.0	51.0	.5716	.382	.337	.384	.337	.348	.278	.431	.419	.360	.360	.37	.407	.501	.431
35.0	35.6	39.4	29.5	-45.9	-.5146	.382	.345	.396	.345	.355	.295	.436	.406	.365	.365	.36	.396	.477	.416
36.0	38.1	42.7	30.6	-62.7	-.7019	.382	.348	.389	.348	.365	.307	.414	.406	.365	.365	.37	.398	.455	.431
37.0	33.9	37.0	28.9	119.4	1.3374	.382	.322	.409	.346	.346	.272	.421	.409	.371	.359	.37	.409	.483	.446
38.0	36.0	39.8	29.7	-68.9	-.7719	.382	.347	.406	.347	.347	.297	.406	.406	.376	.367	.37	.396	.456	.436
39.0	32.0	34.2	28.3	153.8	1.7234	.382	.308	.411	.325	.308	.240	.411	.428	.359	.377	.37	.411	.548	.462
40.0	35.5	39.0	29.6	-140.1	-1.5692	.382	.337	.390	.358	.337	.294	.422	.411	.337	.379	.37	.401	.475	.443
41.0	32.7	35.2	28.6	105.4	1.1812	.382	.307	.383	.338	.322	.262	.444	.413	.383	.368	.38	.398	.519	.444
42.0	38.1	42.6	30.7	-167.3	-1.8736	.382	.348	.390	.365	.365	.323	.424	.365	.390	.373	.39	.390	.466	.373
43.0	33.9	36.9	29.0	119.4	1.3374	.382	.324	.388	.337	.337	.274	.426	.413	.388	.362	.37	388	.514	.438
44.0	34.8	38.1	29.3	-31.6	-.3535	.382	.329	.386	.340	.340	.272	.421	.398	.386	.363	.39	.398	.489	.443
45.0	36.5	40.5	30.1	-52.1	-.5832	.382	.344	.383	.354	.344	.296	.411	392	.373	.363	.39	.392	.489	.431
46.0	31.1	32.7	28.4	213.8	2.3946	.382	.268	.407	.314	.314	.176	.453	.407	.337	.337	.43	.407	.661	.453
47.0	35.3	38.5	30.1	-185.6	-2.0787	.382	.324	.407	.348	.336	.276	.419	.396	.372	.360	.40	.384	.491	.443
48.0	36.3	39.9	30.6	-30.5	-.3420	.382	.336	.423	.347	.358	.282	.412	.390	.358	.358	.40	.379	.487	.433
49.0	32.3	34.4	28.9	145.1	1.6260	.382	.301	.446	.319	.337	.211	.428	.410	.373	.337	.42	.355	.554	464
50.0	35.6	38.9	30.4	-127.1	-1.4237	.382	.320	.437	.343	.343	.273	.413	.390	.366	.355	.41	.378	.495	.437

(Table Continues)

Table 17C — Inferred Pressurant Distribution, Scaling Run 302: Test Configuration 2 (Continued)

INFERRED PRESSURANT DISTRIBUTION - 5 C METER CHAMBER OBSTRUCTED GAS MIXI

VALVE FULLY CLOSED

TIME (SEC)	TEMP(DEG C) MEAN	AIR	PRESSURANT	BETA	BETA/TSTAR	PRESSURANT FRACTION MEAN	I = 1	2	3	4	5	6	7	8	9	10	11	12	13
51.0	35.3	38.4	30.2	10.7	.1194	.382	.323	.444	.347	.359	.262	.408	.384	.372	.347	.43	.359	.493	.432
52.0	33.0	35.4	29.1	84.4	.9457	.382	.314	.458	.330	.346	.218	.426	.378	.362	.330	.44	.362	.538	.458
53.0	33.5	36.1	29.4	-22.8	-.2554	.382	.329	.448	.359	.374	.240	.404	389	.314	.344	.43	.374	.508	.448
54.0	39.1	43.5	32.1	-152.4	-1.7070	.382	.353	.424	.362	.371	.292	397	380	.371	.353	.40	.371	.459	.424
55.0	33.7	36.3	29.5	146.1	1.6363	.382	.343	.461	.343	.373	.240	.402	.387	.358	.329	.43	.358	.491	.446
56.0	32.5	34.6	29.0	55.1	.6170	.382	.328	.469	.345	.363	.204	.398	.363	.363	.328	.45	.363	.539	.451
57.0	35.8	39.1	30.5	-123.4	-1.3822	.382	.351	.444	.363	.363	.258	.398	.386	.375	.340	42	.363	.468	.433
58.0	34.8	37.7	30.0	32.8	.3671	.382	.344	.447	.383	.370	.267	.422	.383	.370	.331	.43	.344	.447	.422
59.0	31.1	32.7	28.5	171.3	1.9186	.382	.333	.479	.358	.358	.164	.454	.382	.358	.285	.47	.333	.551	.430
60.0	35.1	38.1	30.3	-181.0	-2.0272	.382	.361	.425	.361	.361	.259	.425	.387	.361	.336	.43	.361	.463	.425
61.0	36.7	40.1	31.1	-45.3	-.5072	.382	.366	.432	.377	.366	.289	.410	.377	.366	.344	.42	.355	.443	.421
62.0	34.2	36.9	29.8	74.6	.8361	.382	.373	.458	.373	.373	.260	.415	.373	.359	.317	.42	.359	.458	.415
63.0	32.3	34.4	29.0	83.6	.9365	.382	.368	.479	.386	.368	.238	.442	.368	349	.312	.44	.330	.479	.405
64.0	35.8	39.0	30.6	-131.8	-1.4765	.382	.376	.436	.376	.376	.293	.424	.376	.364	.341	.41	.341	.436	.412
65.0	35.3	38.3	30.3	15.8	.1770	.382	.383	.445	.383	.370	.295	.420	.370	.370	.333	.42	.345	.433	.395
66.0	31.1	32.6	28.6	185.6	2.0787	.382	.384	.510	.384	.359	.207	.459	.333	.359	.283	.45	.333	.485	.409
67.0	33.0	35.2	29.5	-109.8	-1.2297	.382	.391	.461	.374	.391	.269	.426	.356	.356	.321	.42	.339	.461	.391
68.0	36.3	39.5	31.2	-113.5	-1.2712	.382	.385	.444	.385	.385	.313	.420	.361	.373	.337	.40	.349	.420	.385
69.0	33.7	36.1	29.8	85.0	.9527	.382	.382	.461	.366	.382	.287	.429	.350	.382	.318	.44	.334	.445	.382
70.0	32.3	34.3	29.1	64.1	.7178	.382	.394	.472	.394	.374	.257	.452	.335	.355	.316	.41	.335	.472	.394
71.0	35.3	38.2	30.6	-117.2	-1.3132	.382	.384	.437	.384	.384	.292	.423	.371	.371	.344	.41	.357	.423	.384
72.0	37.6	41.1	31.8	-61.3	-.6862	.382	.380	.423	.391	.380	.305	.413	.369	.380	.359	.40	.359	.423	.380
73.0	31.8	33.4	29.1	197.1	2.2080	.382	.373	.489	.419	.396	.210	.466	.350	.350	.303	.44	.326	.489	.350
74.0	31.8	33.4	29.1	0.0	0.0000	.382	.360	.476	.407	.384	.221	.453	.337	.360	.314	.43	.337	.523	.360
75.0	36.0	38.9	31.3	-163.0	-1.8257	.382	.357	.435	.383	.383	.291	.422	.383	.370	.343	.40	.343	.449	.396
76.0	34.8	37.3	30.6	37.8	.4231	.382	.362	.437	.377	.377	.273	.437	.377	.377	.347	.42	.333	.452	.392
77.0	33.2	35.3	29.8	60.2	.6744	.382	.365	.438	.383	.383	.238	.438	.365	.365	.329	.43	.347	.474	.401
78.0	32.5	34.4	29.4	33.2	.3723	.382	.371	.452	.411	.411	.230	.452	.250	.371	.351	.43	.331	.492	.411
79.0	35.1	37.8	30.8	-103.4	-1.1587	.382	.372	.415	.400	.386	.258	.415	.372	.372	.343	.41	.358	.443	.415
80.0	35.6	38.4	31.1	-16.2	-.1813	.382	.389	.430	.403	.389	.281	.416	.294	.376	.348	.41	.362	.443	.416
81.0	33.7	36.0	30.0	65.7	.7360	.382	.400	.450	.417	.417	.265	.434	.383	.349	.333	.43	.333	.450	.299
82.0	31.8	33.4	29.1	93.1	1.0430	.382	.391	.459	.414	.436	.230	.436	.368	.368	.322	.43	.345	.482	.276
83.0	32.7	34.6	29.5	-47.8	-.5350	.382	.394	.453	.394	.413	.237	.433	.355	.374	.335	.41	.355	.453	.355
84.0	35.6	38.4	31.1	-110.4	-1.2367	.382	.397	.452	.397	.411	.289	.425	.140	.397	.370	.42	.397	.452	.411
85.0	39.5	43.3	33.3	-91.2	-1.0211	.382	.377	.417	.377	.387	.307	.397	.377	.377	.357	.39	.377	.417	.397
86.0	32.5	34.2	29.6	199.0	2.2290	.382	.368	.456	.368	.390	.216	.412	.368	.368	.347	.43	.368	.456	.412
87.0	30.6	31.7	28.7	126.8	1.4202	.382	.397	.498	.364	.397	.128	.431	.330	.397	.330	.43	.364	.498	.397
88.0	34.2	36.5	30.6	-192.4	-2.1548	.382	.397	.448	.381	.397	.246	.397	.381	.364	.347	.39	.381	.431	.397
89.0	35.5	38.0	31.3	-40.7	-.4562	.382	.392	.436	.377	.392	.274	.392	.377	.377	.348	.39	.377	.422	.407
90.0	35.6	38.3	31.4	-5.3	-.0590	.382	.391	.434	.376	.391	.289	.391	.376	.376	.347	.39	.376	.420	.405
91.0	32.8	34.7	29.8	102.4	1.1473	.382	.388	.450	.368	.388	.245	.409	.388	.368	.347	.40	.368	.429	.409
92.0	31.1	32.4	28.9	102.1	1.1435	.382	.393	.479	.364	.393	.191	.422	.364	.393	.335	.39	.364	.451	.422
93.0	33.2	35.1	30.0	-117.1	-1.3122	.382	.383	.442	.364	.403	.247	403	.383	.364	.344	.40	.383	.442	.403
94.0	35.5	38.0	31.3	-82.0	-.9190	.382	.390	.420	.375	.390	.271	.390	.390	.375	.345	.39	.375	.434	.420
95.0	35.6	38.2	31.4	-5.3	-.0590	.382	.384	.428	.369	.384	.282	.384	.399	.369	.355	.39	.369	.428	.413
96.0	32.7	34.5	29.7	110.4	1.2367	.382	.379	.463	.379	.421	.230	.421	.379	.357	.315	.42	.357	.442	.400
97.0	31.1	32.4	28.9	94.0	1.0532	.382	.375	.491	.404	.433	.201	.433	.404	.317	.317	.37	.346	.462	.404
98.0	33.4	35.4	30.1	-124.2	-1.3911	.382	.405	.482	.405	.424	.272	.424	.405	.348	.310	.34	.348	.405	.386
99.0	35.1	37.6	31.1	-64.0	-.7170	.382	.382	.444	.382	.397	.273	.397	.351	.382	.351	.41	.382	.413	.397
100.0	35.5	38.0	31.3	-10.9	-.1224	.382	.390	.435	.375	.405	.270	.405	.375	.375	.345	.40	.375	.405	.405

UNCLASSIFIED

Table 17D — Inferred Pressurant Distribution, Scaling Run 306: Test Configuration 2

INFERRED PRESSURANT DISTRIBUTION - 5 C METER CHAMBER OBSTRUCTED GAS MI

TIME (SEC)	TEMP(DEG C) MEAN	AIR	PRESSURANT	BETA	BETA/TSTAR	PRESSURANT FRACTION MEAN I = 1	2	3	4	5	6	7	8	9	10	11	12	13
COMMENCE VALVE OPENING																		
0.0	24.4	24.4	-25.3	-1.0	0.0000	0.000	0.000	0.000	0.000	0.000	0.000	0.000	0.000	0.000	0.00	0.000	0.000	
1.0	26.1	26.2	22.3	189.3	7.6112	.039	-.005	.096	.398	.096	.096	-.106	.272	-.308	-.081	-.00	-.081	-.005	.146
VALVE FULLY OPEN																		
2.0	29.4	29.7	20.6	963.4	-2.6665	.037	-.091	-.091	.356	-.102	.018	-.123	.171	-.047	.084	.05	.073	.062	.116
3.0	31.8	32.7	22.1	24.1	1.4007	.091	.006	-.013	.400	-.013	.119	-.003	.156	.006	.147	.05	.128	.081	.119
4.0	33.8	35.2	22.8	8.2	.2420	.118	.029	.013	.367	-.011	.110	.021	.182	.093	.166	.09	.166	.142	.158
5.0	34.9	37.2	24.1	18.5	1.1516	.171	.083	.068	.351	.060	.137	.091	.259	.167	.213	.12	.221	.206	.236
6.0	35.6	38.1	24.4	8.9	.1218	.182	.135	.106	.326	.099	.172	.135	.238	.187	.209	.13	.223	.194	.209
7.0	36.1	39.2	25.3	17.4	.8993	.223	.166	.145	.325	.130	.209	.181	.296	.238	.253	.17	.274	.245	.267
8.0	36.4	39.9	26.0	16.8	.6567	.253	.196	.175	.318	.160	.254	.211	.318	.304	.275	.20	.289	.289	.297
9.0	36.4	40.0	26.1	18.3	.2523	.263	.212	.190	.298	.176	.262	.212	.327	.313	.284	.21	.320	.313	.305
10.0	36.3	40.2	26.4	18.1	.4405	.281	.234	.220	.299	.205	.285	.241	.328	.328	.307	.23	.336	.321	.314
11.0	36.3	40.5	26.8	17.6	.5614	.304	.251	.236	.302	.221	.317	.258	.375	.346	.346	.25	.368	.331	.338
12.0	36.2	40.6	27.1	18.5	.4523	.320	.267	.252	.304	.252	.326	.282	.393	.363	.356	.27	.371	.363	.363
13.0	36.2	40.7	27.3	18.2	.3886	.335	.276	.261	.321	.254	.343	.299	.396	.388	.388	.29	.396	.373	.366
14.0	36.1	40.6	27.3	20.7	.1862	.341	.279	.272	.317	.256	.362	.302	.408	.400	.385	.28	.400	.385	.377
15.0	35.8	40.4	27.5	19.8	.4930	.357	.299	.299	.314	.276	.368	.314	.430	.422	.399	.30	.414	.407	.391
COMMENCE VALVE CLOSURE																		
16.0	35.7	40.5	27.7	18.6	.6042	.377	.311	.319	.334	.295	.381	.334	.467	.451	.405	.33	.428	.428	.420
17.0	35.7	40.5	28.0	5.8	.2362	.385	.321	.329	.345	.313	.385	.353	.449	.457	.409	.34	.425	.449	.425
VALVE FULLY CLOSED																		
18.0	35.4	40.1	27.8	1.8	.0755	.385	.328	.336	.336	.303	.385	.360	.442	.450	.409	.35	.426	.450	.426
19.0	42.2	49.0	31.4	-28.9	-1.1881	.385	.351	.351	.340	.345	.363	.368	.437	.425	.402	.36	.414	.425	.420
20.0	37.5	42.9	28.9	18.7	.7665	.385	.351	.358	.323	.351	.358	.366	.437	.437	.387	.36	.423	.423	.423
21.0	39.4	45.4	29.9	-8.4	-.3435	.385	.361	.374	.336	.355	.355	.374	.426	.433	.381	.36	.407	.420	.413
22.0	37.3	42.6	28.8	9.2	.3771	.385	.347	.383	.332	.339	.339	.383	.441	.419	.390	.39	.412	.419	.412
23.0	38.4	44.0	29.4	-4.8	-.1959	.385	.342	.377	.329	.342	.336	.377	.438	.417	.397	.39	.411	.431	.417
24.0	34.8	39.4	27.6	17.5	.7188	.385	.340	.374	.323	.340	.332	.374	.441	.424	.382	.39	.416	.433	.424
25.0	39.1	44.9	29.7	-20.4	-.8384	.385	.351	.377	.338	.344	.338	.377	.437	.417	.384	.39	.404	.430	.417
26.0	36.2	41.3	28.3	12.9	.5294	.385	.337	.375	.329	.329	.329	.391	.437	.422	.383	.39	.406	.452	.422
27.0	36.2	41.3	28.3	0.0	0.0000	.385	.336	.382	.336	.328	.328	.374	.436	.413	.382	.40	.405	.451	.428
28.0	40.5	46.7	30.5	-18.4	-.7541	.385	.348	.373	.342	.336	.342	.373	.422	.410	.385	.39	.404	.447	.428
29.0	37.0	42.2	28.6	14.9	.6130	.385	.340	.362	.340	.325	.333	.384	.429	.414	.392	.39	.406	.458	.429
30.0	34.3	38.7	27.3	14.3	.5854	.385	.342	.369	.334	.316	.316	.395	.430	.413	.386	.39	.404	.474	.430
31.0	37.3	42.6	28.8	-15.9	-.6532	.385	.357	.371	.349	.335	.313	.400	.429	.400	.385	.40	.393	.451	.422
32.0	38.5	44.2	29.4	-5.5	-.2271	.385	.360	.367	.347	.340	.320	.388	.421	.401	.394	.40	.388	.448	.428
33.0	34.8	39.4	27.6	18.3	.7493	.385	.339	.373	.339	.331	.306	.390	.424	.415	.399	.40	.390	.466	.424
34.0	32.9	36.8	26.6	12.4	.5087	.385	.318	.377	.347	.318	.308	.386	.416	.416	.406	.40	.396	.484	.426
35.0	35.2	39.9	27.7	-14.4	-.5902	.385	.332	.381	.348	.323	.315	.381	.422	.406	.389	.41	.389	.480	.422
36.0	39.8	45.8	30.1	-21.2	-.8717	.385	.345	.383	.357	.338	.319	.383	.415	.402	.389	.40	.377	.466	.421
37.0	33.8	38.0	27.1	29.4	1.2046	.385	.330	.385	.339	.321	.293	.394	.422	.412	.385	.42	.376	.495	.431
38.0	37.0	42.1	28.7	-17.5	-.7193	.385	.334	.385	.356	.326	.304	.385	.423	.408	.385	.41	.378	.475	.430
39.0	36.6	41.7	28.5	1.7	.0709	.385	.325	.394	.356	.333	.303	.386	.424	.401	.386	.41	.378	.477	.424
40.0	37.5	42.8	28.9	-4.2	-.1735	.385	.328	.393	.357	.343	.300	.386	.422	.400	.386	.42	.379	.465	.422
41.0	36.4	41.5	28.4	5.1	.2096	.385	.323	.400	.361	.338	.300	.392	.415	.407	.384	.41	.384	.469	.415
42.0	34.5	38.9	27.4	10.6	.4361	.385	.319	.406	.363	.337	.302	.380	.415	.389	.380	.43	.380	.476	.424
43.0	36.8	41.9	28.6	-12.4	-.5073	.385	.335	.403	.358	.350	.305	.395	.410	.395	.380	.42	.380	.455	.410
44.0	36.8	41.9	28.6	0.0	0.0000	.385	.333	.408	.363	.348	.303	.393	.408	.385	.378	.43	.378	.468	.408
45.0	31.5	34.9	26.1	32.9	1.3498	.385	.307	.409	.341	.330	.262	.398	.421	.398	.375	.46	.364	.511	.421
46.0	36.8	41.9	28.6	-32.9	-1.3498	.385	.337	.398	.360	.352	.307	.383	.413	.398	.375	.43	.375	.465	.405
47.0	35.0	39.6	27.7	9.3	.3813	.385	.330	.415	.364	.356	.305	.389	.406	.389	.381	.43	.373	.457	.406
48.0	39.2	45.1	29.9	-20.1	-.8269	.385	.341	.400	.367	.361	.321	.387	.400	.394	.380	.42	.374	.453	.407
49.0	33.4	37.5	27.0	29.5	1.2121	.385	.332	.418	.361	.351	.285	.389	.408	.389	.370	.43	.370	.485	.408
50.0	37.7	43.0	29.1	-23.0	-.9440	.385	.348	.406	.363	.356	.305	.384	.406	.384	.377	.42	.370	.464	.413

(Table Continues)

Table 17D — Inferred Pressurant Distribution, Scaling Run 306: Test Configuration 2 (Continued)

INFERRED PRESSURANT DISTRIBUTION - 5 C METER CHAMBER OBSTRUCTED GAS MIXI

TIME (SEC)	TEMP(DEG C) MEAN	AIR	PRESSURANT	BETA	BETA/TSTAR	PRESSURANT FRACTION MEAN	I = 1	2	3	4	5	6	7	8	9	10	11	12	13
VALVE FULLY CLOSED																			
51.0	32.2	35.8	26.4	31.4	1.2903	.385	.327	.412	.359	.337	.273	.391	.412	.391	.369	.45	.369	.487	.423
52.0	36.8	41.8	28.7	-27.5	-1.1292	.385	.346	.400	.369	.361	.308	.384	.407	.384	.377	.43	.369	.453	.415
53.0	32.6	36.3	26.6	25.0	1.0245	.385	.333	.406	.364	.354	.271	.395	.416	.375	.364	.45	.375	.478	.416
54.0	36.2	41.1	28.4	-22.4	-.9200	.385	.342	.405	.373	.358	.295	.389	.413	.381	.373	.43	.373	.452	.413
55.0	33.6	37.7	27.1	15.2	.6244	.385	.337	.403	.365	.356	.280	.394	.413	.375	.375	.44	.375	.469	.422
56.0	34.5	38.8	27.5	-5.5	-.2270	.385	.342	.404	.377	.360	.289	.386	.413	.386	.377	.43	.369	.457	.413
57.0	35.2	39.8	27.9	-4.1	-.1679	.385	.347	.397	.363	.363	.296	.380	.414	.397	.380	.43	.372	.446	.414
58.0	36.8	41.8	28.7	-8.3	-.3406	.385	.354	.400	.370	.370	.309	.377	.408	.377	.385	.43	.370	.436	.415
59.0	36.1	40.9	28.4	3.6	.1459	.385	.358	.398	.366	.366	.310	.382	.406	.390	.382	.43	.366	.438	.414
60.0	34.3	38.6	27.5	9.9	.4061	.385	.350	.395	.359	.359	.297	.386	.404	.395	.377	.44	.377	.440	.413
61.0	36.1	40.9	28.4	-9.9	-.4061	.385	.359	.398	.374	.359	.303	.382	.398	.406	.382	.43	.374	.430	.406
62.0	31.7	35.1	26.2	28.2	1.1561	.385	.355	.400	.366	.343	.264	.400	.400	.411	.377	.45	.366	.456	.411
63.0	35.7	40.4	28.2	-26.4	-1.0836	.385	.353	.402	.369	.353	.304	.394	.402	.410	.377	.41	.369	.443	.410
64.0	34.0	38.1	27.3	10.2	.4197	.385	.347	.402	.365	.356	.291	.393	.411	.411	.374	.43	.365	.448	.411
65.0	38.2	43 6	29.5	-22.0	-.9014	.385	.358	.393	.372	.358	.322	.386	.400	.407	.379	.41	.365	.443	.407
66.0	34.0	38.1	27.3	22.0	.9014	.385	.353	.390	.371	.362	.297	.399	.399	.408	.381	.42	.362	.445	.408
67.0	36.6	41.6	28.7	-14.7	-.6042	.385	.355	.386	.370	.362	.308	.393	.409	.401	.386	.41	.370	.440	.409
68.0	34.1	38.4	27.4	13.6	.5594	.385	.355	.382	.364	.355	.300	.391	.409	.419	.391	.41	.373	.446	.400
69.0	35.5	40.2	28.1	-8.2	-.3358	.385	.357	.382	.365	.357	.307	.390	.407	.415	.382	.42	.365	.440	.415
70.0	33.8	37.9	27.2	10.4	.4269	.385	.363	.381	.363	.353	.306	.391	.409	.419	.381	.40	.372	.447	.409
71.0	34.7	39.0	27.7	-5.4	-.2230	.385	.350	.386	.368	.359	.307	.386	.403	.412	.377	.42	.377	.447	.412
72.0	34.0	38.1	27.3	4.3	.1768	.385	.361	.388	.361	.361	.296	.379	.407	.416	.388	.41	.370	.444	.416
73.0	34.8	39.3	27.8	-5.3	-.2191	.385	.350	.393	.367	.358	.297	.384	.410	.410	.384	.41	.376	.436	.419
74.0	38.2	43.6	29.5	-16.8	-.6878	.385	.366	.388	.366	.366	.310	.381	.409	.402	.388	.41	.366	.430	.416
75.0	33.6	37.7	27.2	24.2	.9914	.385	.358	.405	.358	.358	.282	.396	.405	.405	.386	.42	.377	.434	.415
76.0	35.4	40.0	28.0	-10.6	-.4343	.385	.358	.400	.358	.366	.299	.391	.408	.408	.383	.41	.375	.433	.408
77.0	33.3	37.2	27.0	12.9	.5304	.385	.359	.398	.359	.359	.281	.389	.408	418	.379	.41	.379	.438	.418
78.0	34.3	38.6	27.5	-6.8	-.2800	.385	.358	.394	.358	.367	.295	.394	.403	.412	.385	.42	.367	.439	.412
79.0	38.4	43.8	29.6	-20.6	-.8448	.385	.366	.395	.359	.366	.310	.388	.409	.409	.381	.40	.374	.430	.409
80.0	32.9	36.7	26.9	29.5	1.2097	.385	.357	.397	.357	.367	.276	.397	.408	.428	.377	.41	.367	.438	.418
81.0	36.4	41.3	28.6	-20.8	-.8538	.385	.367	.390	.367	.367	.304	.382	.406	.414	.382	.41	.375	.430	.406
82.0	32.6	36.2	26.7	23.3	.9555	.385	.357	.399	.357	.367	.273	.388	.409	.430	.388	.42	.367	.441	.409
83.0	37.0	42.0	28.9	-25.8	-1.0582	.385	.371	.386	.355	.371	.302	.386	.409	.417	.386	.40	.378	.424	.409
84.0	32.4	36.0	26.6	27.0	1.1099	.385	.359	.402	.349	.370	.274	.381	.402	.434	.381	.41	.381	.445	.413
85.0	34.0	38.1	27.4	-11.0	-.4494	.385	.360	.389	.351	.370	.285	.379	.407	.426	.389	.41	.379	.445	.407
86.0	34.5	38.8	27.7	-3.3	-.1338	.385	.360	.396	.369	.369	.288	.378	.405	.423	.387	.40	.378	.441	.405
87.0	35.2	39.7	28.0	-4.1	-.1679	.385	.365	.391	.365	.374	.288	.374	.408	.417	.391	.41	.374	.434	.408
88.0	35.2	39.7	28.0	0.0	0.0000	.385	.363	.389	.363	.372	.303	.372	.406	.415	.389	.41	.380	.432	.406
89.0	31.5	34.8	26.2	25.1	1.0282	.385	.351	.397	.362	.362	.257	.374	.409	.432	.386	.43	.386	.444	.409
90.0	34.5	38.7	27.7	-21.1	-.8662	.385	.367	.394	.367	.367	.285	.376	.403	.421	.385	.42	.385	.430	.403
91.0	36.6	41.5	28.8	-11.5	-.4720	.385	.366	.397	.366	.366	.295	.381	.405	.413	.389	.41	.381	.429	.405
92.0	32.7	36.4	26.8	22.9	.9392	.385	.368	.399	.358	.368	.253	.389	.399	.420	.389	.42	.389	.441	.410
93.0	37.3	42.4	29.2	-26.2	-1.0733	.385	.369	.391	.369	.376	.293	.384	.406	.399	.391	.41	.384	.422	.406
94.0	32.2	35.7	26.6	29.9	1.2275	.385	.359	.403	.359	.370	.260	.381	.414	.414	.392	.42	.392	.436	.403
95.0	36.6	41.5	28.8	-26.7	-1.0953	.385	.365	.389	.365	.381	.286	.389	.404	.412	.389	.41	.389	.412	.412
96.0	34.3	38.5	27.6	12.6	.5154	.385	.361	.398	.370	.370	.278	.379	.407	.416	.388	.41	.388	.425	.407
97.0	34.3	38.5	27.6	0.0	0.0000	.385	.358	.395	.367	.386	.275	.395	.404	.413	.386	.41	.386	.413	.413
98.0	37.0	41.9	29.0	-14.3	-.5854	.385	.368	.391	.368	.376	.291	.391	.407	.407	.391	.40	.384	.415	.407
99.0	32.7	36.4	26.9	24.5	1.0073	.385	.358	.390	.369	.379	.264	.390	.411	.411	.390	.41	.390	.432	.411
100.0	34.3	38.5	27.7	-10.5	-.4322	.385	.371	.389	.361	.380	.278	.389	.408	.408	.389	.40	.389	.426	.408

UNCLASSIFIED

Table 17E — Inferred Pressurant Distribution, Scaling Run 307: Test Configuration 2

INFERRED PRESSURANT DISTRIBUTION - 5 C METER CHAMBER OBSTRUCTED GAS MI

TIME (SEC)	TEMP(DEG C) MEAN	AIR	PRESSURANT	BETA	BETA/TSTAR	PRESSURANT FRACTION MEAN	I = 1	2	3	4	5	6	7	8	9	10	11	12	13
CONMENCE VALVE OPENING																			
0.0	26.1	26.1	24.9	.8	0.0000	0.000	0.000	0.000	0.000	0.000	0.000	0.000	0.000	0.000	0.000	0.00	0.000	0.000	
1.0	29.8	30.0	22.9	-.2	-.0069	.033	.016	-.068	.356	-.054	.087	-.040	.045	-.068	.073	.00	.073	-.012	.016
VALVE FULLY OPEN																			
2.0	31.8	32.4	22.8	17.8	.5316	.061	.003	-.049	.324	-.039	.065	.003	.096	.013	.117	.03	.076	.065	.086
3.0	33.9	35.0	23.0	12.0	.3815	.091	.024	-.026	.292	-.034	.066	.033	.133	.075	.150	.06	.167	.108	.125
4.0	35.4	37.1	23.8	17.2	.7460	.129	.077	.017	.265	.002	.092	.085	.167	.167	.182	.10	.190	.160	.167
5.0	36.1	38.4	24.8	19.7	.9211	.169	.133	.074	.280	.060	.162	.148	.192	.206	.206	.12	.236	.184	.192
6.0	36.7	39.5	25.7	18.5	.8028	.204	.174	.116	.261	.109	.196	.182	.225	.276	.232	.17	.240	.240	.232
7.0	36.8	39.7	25.8	14.8	.0980	.210	.163	.134	.220	.127	.206	.191	.227	.285	.242	.18	.271	.249	.227
8.0	37.0	40.3	26.4	18.7	.6652	.237	.198	.154	.226	.140	.233	.212	.255	.327	.277	.19	.305	.284	.277
9.0	37.0	40.6	26.8	19.6	.4779	.256	.208	.186	.230	.165	.223	.237	.281	.346	.295	.22	.317	.310	.303
10.0	37.0	40.8	27.2	19.4	.5616	.277	.229	.193	.222	.178	.273	.251	.310	.362	.340	.23	.347	.332	.325
11.0	36.9	41.0	27.7	20.0	.7956	.305	.263	.233	.233	.218	.316	.286	.339	.392	.354	.26	.369	.354	.346
12.0	36.9	40.8	27.6	18.2	-.1684	.299	.253	.216	.223	.193	.314	.268	.321	.382	.374	.26	.382	.351	.344
13.0	36.7	40.9	28.0	20.3	.8019	.326	.290	.259	.236	.236	.344	.321	.344	.421	.375	.29	.383	.375	.360
14.0	36.6	40.9	28.2	20.7	.3800	.338	.310	.278	.247	.263	.357	.325	.357	.427	.388	.31	.388	.380	.364
CONMENCE VALVE CLOSURE																			
15.0	36.6	41.0	28.3	19.6	.3477	.350	.312	.288	.265	.257	.359	.336	.367	.454	.407	.32	.414	.391	.375
16.0	19.2	26.1	23.9	52.4	1.7715	3.144	29.753	-5.173	-5.356	-5.31028	.56329	.708	-4.577	-4.120	-4.394	-4.94	-4.349	-4.440	-4.486
VALVE FULLY CLOSED																			
17.0	36.1	37.8	33.3	-222.0	-7.5002	.375	.250	.183	.051	.117	.404	.338	.449	.647	.537	.27	.581	.537	.515
18.0	34.0	35.5	31.6	17.2	.5804	.375	.257	.178	-.057	.100	.257	.414	.466	.754	.518	.28	.649	.571	.492
19.0	35.1	36.6	32.5	-9.1	-.3081	.375	.274	.250	-.013	.155	.274	.418	.442	.705	.466	.29	.561	.561	.490
20.0	35.8	37.4	33.0	-5.5	-.1863	.375	.330	.262	.013	.217	.262	.421	.443	.648	.443	.33	.534	.534	.443
21.0	38.7	40.7	35.4	-19.6	-.6621	.375	.322	.285	.079	.266	.248	.434	.453	.602	.416	.34	.472	.509	.453
22.0	32.5	33.7	30.5	48.7	1.6436	.375	.289	.258	-.149	.164	.101	.539	.539	.727	.445	.28	.570	.602	.508
23.0	36.5	38.2	33.6	-35.3	-1.1932	.375	.315	.249	.030	.205	.161	.512	.512	.622	.381	.33	.512	.556	.490
24.0	38.0	39.9	34.9	-10.4	-.3505	.375	.348	.289	.071	.210	.170	.447	.467	.605	.407	.34	.487	.566	.467
25.0	33.9	35.2	31.6	31.3	1.0584	.375	.313	.259	-.094	.177	.096	.503	.476	.666	.421	.34	.530	.666	.530
26.0	37.9	39.7	34.7	-30.3	-1.0233	.375	.309	.269	.049	.209	.149	.409	.490	.590	.409	.36	.510	.630	.490
27.0	33.5	34.8	31.3	33.5	1.1324	.375	.276	.220	-.090	.135	.023	.445	.501	.726	.445	.38	.529	.726	.557
28.0	34.6	36.0	32.1	-9.7	-.3283	.375	.244	.269	-.063	.141	.039	.423	.499	.678	.423	.42	.525	.704	.576
29.0	36.3	38.0	33.5	-13.8	-.4656	.375	.278	.300	.009	.166	.099	.479	.479	.613	.389	.41	.479	.657	.523
30.0	32.6	33.9	30.6	32.2	1.0894	.375	.309	.278	-.093	.092	-.000	.525	.494	.711	.402	.40	.463	.742	.556
31.0	32.3	33.5	30.3	4.0	.1363	.375	.294	.262	-.092	.101	-.028	.519	.455	.712	.390	.42	.487	.806	.551
32.0	35.1	36.6	32.5	-27.1	-.9155	.375	.324	.300	.030	.202	.054	.472	.447	.644	.374	.39	.447	.693	.496
33.0	34.0	35.4	31.7	9.1	.3081	.375	.268	.322	-.027	.187	-.001	.510	.429	.644	.402	.45	.456	.725	.510
34.0	32.5	33.7	30.5	16.2	.5462	.375	.351	.288	-.058	.194	-.027	.603	.383	.635	.383	.44	.446	.760	.477
35.0	30.9	31.9	29.3	20.7	.6989	.375	.307	.307	-.156	.114	-.079	.616	.384	.732	.384	.46	.462	.848	.500
36.0	34.4	35.8	32.0	-39.3	-1.3265	.375	.320	.346	.034	.216	.034	.527	.372	.657	.397	.44	.423	.657	.449
37.0	36.1	37.8	33.4	-14.0	-.4745	.375	.322	.344	.096	.254	.073	.525	.344	.615	.367	.41	.412	.660	.457
38.0	31.6	32.7	29.8	43.1	1.4544	.375	.278	.313	-.111	.172	-.075	.631	.348	.737	.384	.41	.454	.843	.490
39.0	29.2	29.9	28.0	42.0	1.4175	.375	.216	.325	-.328	.053	-.328	.706	.271	.979	.434	.48	.434	1.033	.598
40.0	33.9	35.2	31.6	-64.1	-2.1641	.375	.283	.392	.066	.229	.038	.528	.338	.637	.365	.41	.392	.719	.474
41.0	33.2	34.4	31.0	6.9	.2342	.375	.266	.382	.033	.237	.003	.499	.353	.673	.411	.41	.411	.703	.499
42.0	30.4	31.3	28.9	36.2	1.2236	.375	.214	.340	-.123	.129	-.165	.550	.340	.803	.424	.50	.466	.887	.508
43.0	35.1	36.6	32.5	-52.3	-1.7674	.375	.265	.362	.094	.241	.070	.484	.362	.606	.411	.43	.411	.679	.460
44.0	36.3	38.0	33.5	-9.4	-.3171	.375	.256	.345	.122	.256	.078	.478	.367	.589	.411	.43	.411	.656	.478
45.0	34.2	35.6	31.8	16.9	.5693	.375	.238	.369	.107	.212	.028	.474	.369	.632	.422	.44	.422	.684	.474
46.0	32.5	33.7	30.5	17.8	.5997	.375	.277	.402	.058	.183	-.035	.464	.339	.714	.433	.46	.402	.714	.464
47.0	34.4	35.8	32.0	-19.3	-.6518	.375	.270	.373	.115	.218	.012	.477	.348	.658	.425	.45	.373	.684	.477
48.0	29.9	30.6	28.5	55.5	1.8737	.375	.182	.324	-.055	.087	-.292	.561	.277	.941	.467	.46	.419	.988	.514
49.0	33.0	34.2	30.9	-43.4	-1.4662	.375	.230	.352	.109	.170	-.074	.504	.322	.717	.443	.44	.413	.748	.504
50.0	33.3	34.6	31.2	-3.6	-.1229	.375	.240	.328	.093	.240	-.024	.504	.328	.680	.445	.41	.445	.710	.475

(Table Continues)

Table 17E — Inferred Pressurant Distribution, Scaling Run 307: Test Configuration 2 (Continued)

INFERRED PRESSURANT DISTRIBUTION - 5 C METER CHAMBER OBSTRUCTED GAS MIXI

TIME (SEC)	TEMP(DEG C) MEAN	AIR	PRESSURANT		BETA	BETA/TSTAR	PRESSURANT FRACTION MEAN	I = 1	2	3	4	5	6	7	8	9	10	11	12	13
VALVE FULLY CLOSED																				
51.0	36.3	37.9	33.6		-25.1	-.8467	.375	.268	.337	.154	.268	.062	.474	.337	.612	.428	.42	.428	.634	.451
52.0	32.8	34.0	30.8		30.4	1.0269	.375	.242	.304	.055	.211	-.007	.521	.304	.708	.428	.42	.428	.770	.490
53.0	28.8	29.4	27.8		62.6	2.1146	.375	.234	.234	-.211	.043	-.466	.679	.234	1.124	.424	.48	.424	1.124	.552
54.0	33.5	34.8	31.4		-68.4	-2.3123	.375	.288	.318	.108	.198	-.042	.498	.318	.737	.438	.40	.408	.737	.468
55.0	31.8	32.8	30.1		19.6	.6633	.375	.289	.289	.071	.143	-.111	.543	.289	.798	.434	.39	.434	.796	.507
56.0	33.0	34.2	31.0		-14.3	-.4835	.375	.266	.298	.108	.203	-.081	.519	.298	.740	.456	.39	.456	.740	.487
57.0	30.9	31.8	29.4		26.4	.8904	.375	.262	.303	.015	.180	-.190	.549	.262	.837	.467	.38	.467	.837	.508
58.0	34.6	35.9	32.3		-40.7	-1.3746	.375	.317	.317	.154	.236	-.009	.480	.317	.643	.426	.42	.426	.670	.480
59.0	33.0	34.2	31.0		15.1	.5092	.375	.320	.320	.099	.225	-.058	.477	.320	.698	.414	.47	.414	.698	.477
60.0	33.7	35.0	31.6		-7.1	-.2399	.375	.312	.342	.107	.253	-.040	.459	.312	.665	.430	.45	.430	.665	.488
61.0	30.6	31.4	29.1		38.4	1.2972	.375	.272	.359	-.033	.185	-.207	.489	.228	.837	.446	.53	.446	.794	.533
62.0	31.6	32.6	29.9		-15.5	-.5228	.375	.278	.352	.053	.203	-.096	.465	.278	.764	.427	.53	.427	.689	.502
63.0	32.6	33.8	30.7		-12.8	-.4324	.375	.264	.396	.099	.231	-.000	.429	.264	.693	.429	.52	.429	.660	.462
64.0	31.2	32.2	29.7		17.6	.5936	.375	.237	.433	.041	.198	-.077	.511	.237	.746	.433	.55	.433	.668	.472
65.0	35.8	37.3	33.2		-45.1	-1.5226	.375	.292	.391	.144	.243	.094	.440	.317	.613	.415	.48	.415	.563	.465
66.0	33.0	34.2	31.0		24.8	.8387	.375	.286	.380	.096	.254	.033	.507	.254	.665	.412	.50	.412	.601	.475
67.0	33.3	34.6	31.3		-3.6	-.1229	.375	.303	.394	.089	.242	.028	.486	.242	.669	.394	.51	.394	.638	.486
68.0	28.1	28.5	27.5		83.2	2.8099	.375	.094	.490	-.500	-.005	-.797	.787	-.104	1.381	.391	.78	.490	1.282	.589
69.0	33.0	33.9	31.4		-80.6	-2.7246	.375	.280	.396	.085	.241	-.110	.591	.202	.747	.357	.51	.396	.708	.474
70.0	30.4	31.1	29.2		34.5	1.1649	.375	.257	.367	-.075	.201	-.295	.643	.146	.974	.367	.58	.367	.809	.533
71.0	31.6	32.4	30.2		-18.4	-.6207	.375	.297	.344	-.025	.251	-.210	.574	.205	.897	.344	.57	.390	.759	.482
72.0	31.2	32.0	30.0		4.8	.1629	.375	.301	.349	-.037	.253	-.230	.543	.156	.929	.349	.59	.349	.833	.494
73.0	33.9	34.9	32.1		-29.8	-1.0083	.375	.312	.384	.061	.276	-.083	.491	.240	.743	.348	.52	.348	.707	.527
74.0	32.8	33.8	31.2		10.6	.3598	.375	.299	.379	.020	.259	-.099	.538	.219	.817	.339	.49	.379	.737	.498
75.0	31.4	32.2	30.1		17.1	.5765	.375	.303	.350	-.074	.209	-.215	.538	.162	.915	.397	.58	.397	.774	.538
76.0	32.6	33.6	31.1		-15.1	-.5118	.375	.332	.332	.007	.210	-.115	.535	.210	.819	.372	.57	.372	.697	.535
77.0	29.5	30.1	28.6		46.4	1.5684	.375	.279	.279	-.250	.081	-.448	.609	.147	1.138	.411	.67	.477	.873	.609
78.0	34.4	35.5	32.5		-61.5	-2.0777	.375	.315	.349	.076	.213	-.061	.486	.247	.759	.418	.52	.418	.622	.520
79.0	30.7	31.4	29.5		41.8	1.4116	.375	.319	.319	-.102	.109	-.259	.529	.214	.897	.477	.63	.477	.739	.529
80.0	31.8	32.6	30.4		-15.0	-.5052	.375	.351	.306	-.058	.124	-.194	.487	.260	.851	.442	.62	.442	.669	.578
81.0	32.3	33.2	30.8		-6.5	-.2194	.375	.300	.343	-.041	.129	-.126	.471	.300	.812	.428	.59	.471	.641	.556
82.0	29.5	30.1	28.6		42.8	1.4445	.375	.268	.335	-.196	.069	-.395	.467	.202	1.065	.534	.73	.534	.733	.534
83.0	33.2	34.1	31.6		-51.5	-1.7389	.375	.307	.346	-.004	.190	-.082	.462	.268	.773	.462	.57	.423	.617	.540
84.0	30.6	31.2	29.4		33.4	1.1298	.375	.262	.371	-.118	.099	-.282	.534	.208	.970	.480	.58	.534	.698	.534
85.0	33.7	34.7	32.0		-38.4	-1.2972	.375	.307	.344	.012	.233	-.099	.455	.270	.750	.492	.56	.455	.603	.492
86.0	29.5	30.1	28.6		56.0	1.8933	.375	.239	.375	-.238	.103	-.443	.580	.103	1.125	.512	.64	.580	.785	.512
87.0	35.4	36.6	33.5		-68.6	-2.3166	.375	.299	.363	.042	.235	-.022	.459	.299	.716	.459	.52	.459	.588	.459
88.0	30.4	31.0	29.3		54.8	1.8499	.375	.277	.335	-.188	.103	-.304	.510	.161	.975	.568	.62	.568	.742	.510
89.0	31.6	32.4	30.3		-18.4	-.6207	.375	.271	.319	-.117	.174	-.214	.514	.222	.950	.514	.56	.514	.659	.514
90.0	29.3	29.9	28.5		38.2	1.2901	.375	.221	.293	-.352	.078	-.495	.579	.149	1.224	.579	.65	.579	.794	.579
91.0	31.8	32.6	30.5		-40.3	-1.3623	.375	.342	.295	-.086	.152	-.181	.533	.200	.914	.485	.58	.485	.676	.485
92.0	33.7	34.7	32.1		-21.3	-.7200	.375	.340	.301	-.008	.185	-.085	.494	.263	.803	.494	.53	.494	.610	.456
93.0	31.4	32.2	30.2		25.9	.8738	.375	.318	.318	-.081	.118	-.181	.517	.218	.917	.567	.56	.517	.617	.468
94.0	31.9	32.7	30.6		-6.9	-.2330	.375	.311	.311	-.062	.171	-.156	.497	.218	.918	.544	.54	.497	.636	.451
95.0	33.0	33.9	31.5		-12.1	-.4088	.375	.315	.315	-.017	.190	-.100	.481	.232	.854	.522	.52	.481	.605	.481
96.0	27.6	27.8	27.3		94.8	3.2036	.376	.198	-.032	-1.876	-.493	-2.337	.890	-.493	2.964	1.350	1.35	1.120	1.812	.429
97.0	35.1	35.7	34.0		-105.4	-3.5606	.375	.306	.250	-.201	.137	-.258	.475	.193	.982	.588	.64	.532	.701	.532
98.0	30.2	30.6	29.5		55.0	1.8572	.375	.250	.148	-.667	-.056	-.769	.556	.046	1.473	.760	.76	.760	.963	.658
99.0	33.3	33.9	32.4		-40.7	-1.3765	.375	.339	.272	-.335	.069	-.335	.474	.137	1.081	.609	.67	.609	.744	.541
100.0	32.3	32.8	31.5		11.5	.3877	.375	.242	.242	-.361	.016	-.437	.544	.167	1.147	.619	.69	.619	.845	.544

UNCLASSIFIED

Table 17F — Inferred Pressurant Distribution, Scaling Run 309: Test Configuration 2

INFERRED PRESSURANT DISTRIBUTION - 5 C METER CHAMBER OBSTRUCTED GAS NI

TIME (SEC)	TEMP(DEG C) MEAN	AIR	PRESSURANT	BETA	BETA/TSTAR	PRESSURANT FRACTION MEAN I = 1	2	3	4	5	6	7	8	9	10	11	12	13
COMMENCE VALVE OPENING																		
0.0	27.3	27.3	28.0	.4	0.0000	0.000	0.000	0.000	0.000	0.000	0.000	0.000	0.000	0.000	0.00	0.000	0.000	
1.0	30.0	30.1	23.4	-143.9	-2.0534	.014	-.057	-.072	.315	-.042	.032	-.131	.136	-.176	.018	.01	.032	.032	.077
VALVE FULLY OPEN																		
2.0	33.1	33.6	27.2	34.0	2.0381	.072	.093	.015	.640	.046	.187	-.032	.124	-.172	.015	-.04	.031	-.016	.046
3.0	35.5	36.5	27.4	13.8	.5282	.107	.087	-.001	.493	.021	.131	.043	.153	-.001	098	.04	.120	.087	.109
4.0	37.1	38.7	27.8	17.4	.8295	.148	.121	.048	.405	.066	.140	.094	.213	.103	.149	.08	.176	.149	.176
5.0	37.7	39.5	28.0	3.7	.0300	.155	.115	.054	.349	.063	.158	.089	.219	.132	.167	.10	.193	.176	193
6.0	38.4	40.8	28.3	16.9	.6497	.187	.159	.087	.320	.103	.184	.151	.240	.184	.200	.15	.224	.206	216
7.0	38.9	41.8	28.9	17.9	.9040	.227	.180	.141	.319	.141	.249	.187	.273	.234	.249	.18	.280	.249	257
8.0	39.1	42.3	29.2	15.8	.2947	.241	.200	.154	.307	.162	.261	.208	.299	.261	.276	.20	.284	.261	261
9.0	39.2	42.6	29.4	18.0	.4498	.260	.223	.170	.299	.177	.276	.238	.306	.299	.299	.21	.306	.291	.276
10.0	39.1	42.8	29.6	19.0	.4709	.278	.250	.196	.288	.196	.295	.257	.333	.311	.311	.21	.341	.303	.311
11.0	39.0	42.9	29.8	19.1	.3892	.292	.258	.219	.296	.235	.311	.265	.349	.327	.311	.25	.334	.319	.327
12.0	39.0	43.1	30.1	18.7	.6173	.315	.283	.244	.298	.252	.344	.298	.375	.360	.344	.26	.352	.344	.344
13.0	38.8	43.1	30.2	19.6	.4063	.329	.294	.255	.310	.263	.372	.310	.388	.364	.349	.27	.372	.364	.364
14.0	38.7	42.9	30.3	21.4	.2711	.338	.304	.256	.304	.256	.367	.335	.407	.383	.359	.28	.375	.383	.383
15.0	38.6	43.1	30.6	19.0	.6670	.361	.328	.288	.328	.288	.391	.336	.431	.383	407	.31	.415	.383	.399
COMMENCE VALVE CLOSURE																		
16.0	38.5	43.0	30.6	21.8	.0665	.363	.342	.286	.326	.294	.398	.350	.430	.398	.406	.30	.422	.390	.374
17.0	38.2	42.7	30.9	39.7	.5705	.379	.350	.299	.325	.299	.426	.367	.435	.435	.418	.31	.443	.409	.401
VALVE FULLY CLOSED																		
18.0	37.7	42.0	30.8	16.6	.2387	.382	.360	.307	.298	.334	.360	.351	.458	.449	.422	.31	.458	.431	.422
19.0	35.5	39.1	29.6	42.5	.6104	.382	.349	.296	.285	.317	.338	.359	.487	.444	.434	.31	.465	.434	.444
20.0	36.0	39.8	29.9	-10.8	-.1555	.382	.369	.318	.288	.338	.349	.369	.460	.440	.420	.31	.450	.430	.420
21.0	38.8	43.4	31.3	-48.2	-.6927	.382	.367	.334	.292	.342	.334	.400	.441	.433	.400	.35	.433	.425	.417
22.0	33.5	36.5	28.8	102.9	1.4780	.382	.376	.324	.259	.337	.311	.402	.468	.441	.389	.31	.468	.455	.428
23.0	35.8	39.5	29.9	-53.5	-.7694	.382	.367	.346	.304	.346	.315	.398	.450	.419	.388	.33	.440	.440	.419
24.0	36.7	40.6	30.3	-17.0	-.2439	.382	.360	.340	.301	.331	.311	.389	.457	.408	.389	.36	.447	.436	.438
25.0	34.9	38.3	29.5	35.7	.5129	382	.364	.330	.285	.319	.296	.409	.454	.409	.420	.34	.454	.454	.432
26.0	38.3	42.7	31.1	-62.1	-.8921	.382	.363	.337	.311	.337	.303	.416	.433	.416	.398	.35	.433	.442	.424
27.0	32.8	35.5	28.6	114.2	1.6404	.382	.360	.316	.272	.316	.243	.447	.476	.418	.389	.34	.447	.491	.447
28.0	35.6	39.2	29.9	-70.0	-1.0064	.382	.346	.346	.303	.325	.292	.422	.444	.411	.379	.35	.433	.476	.433
29.0	35.5	38.9	29.8	3.7	.0529	.382	.342	.342	.321	.310	.288	.408	.441	.419	.397	.36	.430	.474	.430
30.0	33.7	36.6	29.0	41.7	.5989	.382	.319	.332	.306	.293	.280	.410	.463	.410	.410	.37	.423	.502	.449
31.0	37.4	41.5	30.8	-77.3	-1.1113	.382	.332	.341	.332	.313	.303	.397	.435	.407	.397	.37	.425	.472	.435
32.0	33.5	36.4	28.9	81.9	1.1766	.382	.316	.343	.303	.290	.263	.410	.463	.410	.397	.38	.450	.490	.450
33.0	34.9	38.2	29.6	-35.0	-.5032	.382	.338	.349	.326	.291	.303	.430	.442	.384	.395	.38	.430	.465	.430
34.0	32.8	35.5	28.6	55.3	.7948	.382	.337	.323	.308	.279	.264	.439	.454	.396	.396	.38	.439	.512	.439
35.0	34.8	38.0	29.5	-51.4	-.7384	.382	.353	.353	.330	.306	.283	.424	.436	.388	.388	.38	.412	.483	.424
36.0	30.9	32.8	27.9	120.6	1.7326	.382	.311	.332	.271	.271	.209	.454	.475	.414	.373	.39	.434	.557	.475
37.0	35.3	38.7	29.8	-130.8	-1.8801	.382	.343	.354	.331	.309	.286	.411	.434	.400	.377	.38	.411	.490	.434
38.0	35.5	38.9	29.9	-3.8	-.0540	.382	.340	.362	.340	.329	.284	.407	.429	.385	.362	.39	.396	.497	.441
39.0	31.1	33.0	28.0	127.0	1.8251	.382	.317	.357	.297	.277	.216	.438	.478	.398	.357	.39	.378	.599	.458
40.0	34.8	37.9	29.7	-113.3	-1.6282	.382	.343	.355	.330	.330	.269	.416	.416	.404	.367	.39	.392	.526	.428
41.0	36.0	39.5	30.4	-26.3	-.3784	.382	.340	.362	.329	.329	.274	.406	.417	.417	.373	.39	.384	.515	.428
42.0	32.0	34.2	28.4	104.6	1.5035	.382	.315	.350	.315	.280	.228	.420	.420	.420	.367	.40	.385	.595	.472
43.0	36.2	39.7	30.5	-107.8	-1.5486	.382	.323	.356	.345	.313	.291	.411	.422	.411	.367	.40	.389	.509	.432
44.0	37.4	41.2	31.2	-22.5	-.3226	.382	.329	.358	.339	.319	.299	.398	.418	.418	.368	.40	.388	.497	.428
45.0	32.3	34.6	28.7	116.7	1.6765	.382	.304	.355	.321	.304	.254	.439	.422	.439	.355	.40	.372	.557	.439
46.0	34.6	37.6	29.8	-64.2	-.9222	.382	.320	.371	.333	.320	.294	.410	.410	.423	.384	.41	.371	.500	.423
47.0	36.5	40.0	30.8	-40.5	-.5821	.382	.329	.394	.350	.329	.307	.416	.405	.405	.372	.40	.361	.492	.405
48.0	32.5	34.8	28.8	97.0	1.3942	.382	.308	.374	.325	.291	.241	.441	.408	.408	.374	.44	.374	.556	.424
49.0	30.7	32.4	28.0	70.3	1.0103	.382	.310	.355	.332	.287	.220	.444	.377	.444	.355	.44	.355	.601	.444
50.0	32.5	34.8	28.8	-70.3	-1.0103	.382	.344	.377	.344	.327	244	.444	.394	.410	.360	.41	.344	.544	.427

(Table Continues)

Table 17F — Inferred Pressurant Distribution, Scaling Run 309: Test Configuration 2 (Continued)

INFERRED PRESSURANT DISTRIBUTION - 5 C METER CHAMBER OBSTRUCTED GAS MIXI

VALVE FULLY CLOSED

TIME (SEC)	TEMP(DEG C) MEAN	AIR	PRESSURANT	BETA	BETA/TSTAR	PRESSURANT FRACTION MEAN	I = 1	2	3	4	5	6	7	8	9	10	11	12	13
51.0	36.9	40.5	31.1	-103.0	-1.4795	.382	.353	.385	.353	.342	.299	.417	.395	.395	.374	.39	.363	.480	.417
52.0	34.9	38.0	30.0	38.9	.5585	.382	.359	.384	.359	.347	.271	.434	.397	.409	.359	.38	.347	.497	.422
53.0	29.9	31.1	27.9	172.5	2.4792	.382	.329	.392	.297	.265	.139	.487	.423	.455	.329	.42	.297	.676	.455
54.0	32.8	35.0	29.4	-127.2	-1.8285	.382	.356	.392	.338	.320	.230	.446	.392	.428	.356	.41	.338	.535	.428
55.0	35.5	38.3	30.9	-66.5	-.9555	.382	.354	.381	.354	.354	.273	.435	.395	.408	.368	.39	.341	.489	.422
56.0	34.1	36.5	30.1	32.6	.4679	.382	.367	.382	.351	.351	.258	.429	.382	.413	.367	.39	.336	.506	.429
57.0	32.3	34.3	29.1	51.6	.7409	.382	.353	.372	.353	.333	.237	.430	.391	.410	.353	.41	.353	.545	.430
58.0	29.7	30.8	27.9	122.8	1.7652	.382	.335	.369	.335	.301	.166	.471	.369	.471	.301	.47	.301	.606	.471
59.0	32.3	34.3	29.2	-122.8	-1.7652	.382	.364	.384	.344	.364	.246	.423	.384	.423	.344	.42	.325	.521	.423
60.0	35.5	38.2	31.0	-83.0	-1.1922	.382	.362	.390	.348	.362	.280	.417	.390	.417	.348	.40	.362	.472	.417
61.0	34.2	36.7	30.2	28.2	.4047	.382	.370	.386	.339	.355	.277	.401	.401	.432	.355	.40	.355	.478	.417
62.0	33.2	35.4	29.6	28.4	.4082	.382	.363	.398	.346	.346	.259	.398	.398	.433	.329	.41	.363	.503	.416
63.0	29.9	31.0	28.0	136.3	1.9593	.382	.341	.374	.308	.308	.175	.408	.408	.507	.341	.40	.341	.640	.408
64.0	33.2	35.3	29.7	-136.3	-1.9593	.382	.379	.361	.343	.343	.254	.415	.397	.433	.343	.41	.343	.523	.415
65.0	36.0	38.8	31.4	-66.7	-.9582	.382	.375	.388	.348	.361	.294	.429	.388	.429	.348	.38	.348	.470	.402
66.0	32.8	34.9	29.6	76.9	1.1044	.382	.379	.379	.342	.360	.266	.436	.398	.436	.323	.41	.342	.492	.396
67.0	31.8	33.5	29.0	36.3	.5218	.382	.369	.391	.347	.369	.237	.434	.391	.434	.325	.43	.325	.522	.391
68.0	34.6	37.1	30.6	-82.5	-1.1854	.382	.377	.393	.347	.377	.285	.424	.393	.408	.347	.42	.331	.454	.406
69.0	36.3	39.2	31.6	-37.2	-.5348	.382	.371	.397	.371	.371	.305	.411	.384	.397	.345	.41	.358	.450	.397
70.0	32.7	34.6	29.5	88.6	1.2729	.382	.381	.419	.361	.381	.264	.439	.381	.400	.323	.41	.323	.477	.400
71.0	29.7	30.7	28.0	133.0	1.9106	.382	.399	.435	.363	.399	.182	.471	.363	.399	.290	.47	.290	.544	.363
72.0	31.3	32.8	28.8	-85.8	-1.2333	.382	.382	.407	.382	.382	.232	.432	.382	.407	.307	.45	.332	.482	.382
73.0	35.8	38.5	31.5	-126.6	-1.8185	.382	.376	.390	.390	.376	.304	.404	.390	.404	.347	.41	.347	.433	.390
74.0	36.5	39.4	31.9	-13.7	-.1971	.382	.372	.399	.399	.372	.305	.399	.385	.399	.345	.41	.358	.426	.399
75.0	34.1	36.3	30.4	53.2	.7651	.382	.377	.411	.394	.377	.293	.411	.394	.394	.326	.41	.343	.427	.411
76.0	31.4	33.0	28.9	83.5	1.2002	.382	.367	.416	.391	.367	.271	.416	.391	.416	.295	.41	.343	.464	.416
77.0	31.1	32.6	28.7	15.3	.2198	.382	.382	.434	.408	.356	.253	.408	.382	.408	.305	.43	.331	.459	.408
78.0	34.6	37.0	30.7	-109.6	-1.5751	.382	.374	.405	.405	.358	.310	.389	.389	.389	.342	.40	.358	.437	.405
79.0	36.0	38.7	31.6	-30.4	-.4372	.382	.382	.396	.382	.368	.312	.396	.396	.396	.340	.41	.354	.424	.410
80.0	32.5	34.4	29.5	87.6	1.2581	.382	.381	.401	.401	.360	.278	.401	.401	.401	.319	.42	.340	.442	.422
81.0	32.7	34.6	29.6	-5.8	-.0827	.382	.370	.390	.410	.370	.270	.410	.390	.410	.330	.41	.330	.470	.410
82.0	34.2	36.5	30.5	-44.4	-.6384	.382	.364	.398	.398	.364	.298	.414	.398	.414	.331	.39	.348	.447	.398
83.0	29.9	30.9	28.2	159.6	2.2941	.382	.330	.405	.405	.368	.218	.443	.443	.443	.255	.44	.293	.518	.405
84.0	33.7	35.7	30.5	-148.7	-2.1364	.382	.368	.387	.387	.368	.292	.424	.405	.424	.330	.40	.349	.443	.387
85.0	32.0	33.6	29.4	54.8	.7876	.382	.386	.386	.386	.386	.266	.434	.410	.434	.290	.41	.338	.457	.386
86.0	36.3	38.9	32.1	-110.8	-1.5926	.382	.375	.375	.390	.375	.302	.419	.390	.405	.346	.40	.361	.434	.390
87.0	32.5	34.2	29.7	93.9	1.3499	.382	.392	.392	.392	.392	.260	.437	.392	.415	.326	.39	.348	.437	.392
88.0	35.1	37.4	31.4	-70.1	-1.0069	.382	.377	.377	.377	.377	.295	.426	.394	.394	.344	.41	.377	.426	.394
89.0	29.2	29.7	28.3	213.2	3.0638	.382	.365	.365	.365	.439	-.005	.587	.365	.439	.291	.51	.365	.587	.291
90.0	32.7	33.8	30.8	-167.7	-2.4104	.382	.398	.364	.398	.398	.197	.465	.398	.398	.331	.43	.364	.465	.364
91.0	36.3	38.0	33.6	-88.6	-1.2729	.382	.387	.387	.387	.387	.250	.433	.410	.387	.342	.41	.365	.433	.387
92.0	32.7	33.8	30.8	88.6	1.2729	.382	.421	.421	.387	.387	.186	.455	.387	.387	.320	.42	.387	.455	.354
93.0	29.0	29.4	28.3	180.5	2.5933	.382	.453	.453	.361	.361	-.190	.636	.361	.361	.269	.45	.453	.636	.361
94.0	36.5	38.1	34.0	-239.4	-3.4407	.382	.423	.399	.399	.375	.229	.447	.399	.375	.326	.39	.375	.423	.399
95.0	31.6	32.5	30.2	125.7	1.8067	.382	.455	.412	.412	.369	.109	.499	.369	.369	.282	.41	.412	.499	.369
96.0	30.9	31.7	29.7	30.6	.4397	.382	.446	.397	.397	.348	.103	.495	.397	.397	.299	.39	.397	.446	.446
97.0	33.0	34.1	31.3	-78.1	-1.1218	.382	.450	.379	.379	.379	.168	.450	.379	.379	.309	.45	.379	.450	.415
98.0	32.1	33.1	30.6	28.8	.4133	.382	.443	.364	.364	.364	.126	.483	.404	.364	.324	.44	.364	.483	.443
99.0	32.0	32.9	30.4	6.4	.0918	.382	.442	.360	.401	.360	.156	.482	.401	.360	.319	.44	.360	.482	.401
100.0	32.3	33.3	30.7	-12.5	-.1802	.382	.412	.373	.373	.412	.180	.489	.412	.373	.296	.41	.373	.451	.412

UNCLASSIFIED

Table 17G — Inferred Pressurant Distribution, Scaling Run 310: Test Configuration 2

INFERRED PRESSURANT DISTRIBUTION - 5 C METER CHAMBER OBSTRUCTED GAS MI

TIME (SEC)	TEMP(DEG C) MEAN	AIR	PRESSURANT	BETA	BETA/TSTAR	PRESSURANT FRACTION MEAN I = 1	2	3	4	5	6	7	8	9	10	11	12	13
COMMENCE VALVE OPENING																		
0.0	28.0	28.0	31.8	.8	0.0000	0.000	0.000	0.000	0.000	0.000	0.000	0.000	0.000	0.000	0.00	0.000	0.000	
1.0	31.5	31.6	26.5	-27.9	-.7349	.026	-.007	-.085	.498	-.085	.129	-.065	.207	-.221	-.026	-.00	-.026	-.026	.051
VALVE FULLY OPEN																		
2.0	34.4	35.0	27.2	26.7	1.4420	.077	.106	.029	.567	-.010	.195	.067	.093	-.151	.054	.00	.054	-.022	.016
3.0	36.7	37.7	27.6	9.7	.3095	.106	.085	.006	.469	-.004	.154	.085	.134	.006	.124	.03	.105	.075	.105
4.0	38.1	39.8	28.0	16.8	.7410	.145	.113	.045	.385	.028	.172	.138	.215	.087	.155	.08	.172	.121	.164
5.0	38.7	40.8	28.4	17.2	.4722	.168	.136	.064	.354	.039	.193	.160	.225	.152	.169	.10	.201	.185	.201
6.0	39.3	41.8	28.9	16.8	.5573	.195	.164	.109	.326	.094	.218	.194	.249	.187	.210	.13	.218	.210	.225
7.0	39.7	42.5	29.2	15.3	.3016	.211	.180	.120	.300	.097	.240	.225	.277	.225	.232	.14	.240	.232	.232
8.0	39.8	43.0	29.7	18.4	.7959	.244	.213	.183	.303	.153	.280	.251	.280	.265	.258	.17	.265	.273	.273
9.0	39.7	43.3	30.1	18.8	.6867	.271	.238	.193	.299	.163	.321	.268	.344	.291	.291	.19	.314	.299	.314
10.0	39.8	43.4	30.2	17.8	.1280	.277	.245	.208	.283	.177	.336	.275	.321	.313	.306	.20	.313	.306	.313
11.0	39.8	43.7	30.5	18.2	.5415	.298	.282	.237	.282	.222	.320	.305	.350	.312	.327	.22	.342	.327	.335
12.0	39.7	44.0	30.8	18.3	.6545	.322	.304	.266	.304	.259	.388	.335	.358	.365	.342	.26	.335	.335	.335
13.0	39.6	43.9	30.9	20.0	.2394	.331	.312	.273	.304	.258	.388	.342	.373	.365	.350	.27	.350	.358	.350
14.0	39.5	43.9	31.0	20.1	.3618	.342	.326	.295	.311	.264	.404	.365	.373	.388	.350	.28	.357	.373	.365
COMMENCE VALVE CLOSURE																		
15.0	39.4	44.0	31.3	18.8	.5264	.361	.338	.323	.330	.299	.409	.378	.385	.393	.378	.31	.385	.385	.370
16.0	39.2	43.7	31.3	7.2	.1929	.365	.340	.324	.324	.291	.428	.372	.404	.404	.388	.29	.388	.396	.388
VALVE FULLY CLOSED																		
17.0	39.0	43.4	32.0	20.8	.5556	.380	.360	.333	.333	.316	.473	.403	.412	.412	.395	.33	.395	.395	.386
18.0	40.1	44.8	32.5	-8.5	-.2281	.380	.383	.326	.326	.318	.407	.399	.432	.416	.383	.33	.407	.416	.399
19.0	42.2	47.4	33.7	-15.0	-.4012	.380	.379	.364	.321	.342	.393	.415	.415	.408	.364	.34	.393	.406	.401
20.0	38.9	43.2	31.9	25.0	.6664	.380	.402	.376	.314	.340	.393	.438	.402	.393	.358	.34	.393	.411	.385
21.0	38.9	43.2	31.9	0.0	0.0000	.380	.376	.367	.305	.331	.376	.446	.402	.411	.376	.34	.393	.420	.393
22.0	40.1	44.8	32.5	-10.0	-.2681	.380	.384	.375	.310	.334	.359	.449	.400	.416	.375	.35	.384	.408	.392
23.0	39.4	43.8	32.2	5.6	.1498	.380	.391	.382	.314	.340	.357	.442	.399	.399	.365	.36	.382	.417	.391
24.0	36.2	39.7	30.5	30.2	.8068	.380	.396	.375	.299	.320	.331	.461	.418	.396	.353	.37	.385	.429	.407
25.0	38.5	42.7	31.7	-22.9	-.6101	.380	.394	.385	.313	.331	.340	.449	.413	.385	.349	.38	.376	.422	.403
26.0	41.7	46.8	33.4	-24.5	-.6543	.380	.390	.375	.323	.345	.345	.443	.413	.390	.345	.38	.375	.420	.396
27.0	37.5	41.3	31.2	34.2	.9122	.380	.409	.399	.311	.340	.331	.458	.409	.380	.331	.38	.370	.429	.399
28.0	39.0	43.4	32.0	-14.5	-.3861	.380	.421	.395	.324	.351	.333	.447	.403	.368	.333	.38	.359	.421	.403
29.0	34.8	37.9	29.9	44.3	1.1817	.380	.426	.413	.300	.338	.313	.476	.413	.351	.313	.38	.338	.463	.413
30.0	38.3	42.5	31.6	-38.4	-1.0251	.380	.399	.399	.334	.353	.334	.454	.408	.362	.325	.38	.362	.436	.399
31.0	38.5	42.7	31.7	-1.6	-.0422	.380	.391	.400	.327	.345	.318	.455	.418	.354	.327	.39	.373	.437	.409
32.0	37.6	41.5	31.3	8.2	.2183	.380	.398	.398	.330	.330	.310	.456	.417	.359	.330	.38	.368	.456	.407
33.0	41.3	46.3	33.3	-30.1	-.8043	.380	.393	.393	.340	.347	.324	.439	.409	.363	.340	.37	.370	.439	.409
34.0	37.3	41.1	31.1	33.5	.8946	.380	.387	.397	.337	.337	.317	.457	.427	.347	.317	.37	.367	.457	.417
35.0	38.7	42.9	31.8	-13.2	-.3523	.380	.383	.401	.338	.338	.329	.446	.410	.347	.347	.38	.365	.446	.410
36.0	35.9	39.2	30.4	28.4	.7579	.380	.376	.410	.320	.320	.308	.466	.421	.353	.320	.39	.353	.466	.433
37.0	38.3	42.4	31.7	-25.3	-.6760	.380	.370	.398	.342	.333	.323	.453	.407	.360	.333	.38	.360	.462	.416
38.0	37.3	41.1	31.1	10.1	.2689	.380	.362	.392	.342	.332	.332	.442	.402	.382	.322	.39	.352	.472	.422
39.0	34.1	36.9	29.6	38.5	1.0280	.380	.375	.416	.321	.334	.307	.470	.416	.362	.307	.38	.334	.498	.416
40.0	39.2	43.6	32.1	-55.1	-1.4714	.380	.374	.400	.339	.339	.330	.435	.400	.374	.339	.39	.356	.469	.400
41.0	37.3	41.1	31.1	17.7	.4719	.380	.370	.390	.340	.331	.321	.440	.410	.380	.331	.39	.350	.490	.400
42.0	35.9	39.3	30.4	15.4	.4100	.380	.367	.390	.322	.311	.322	.446	.412	.379	.345	.39	.345	.502	.412
43.0	40.1	44.7	32.6	-39.6	-1.0568	.380	.374	.382	.341	.341	.333	.423	.407	.366	.349	.39	.358	.464	.415
44.0	38.[illegible]	42.0	31.4	17.9	.4779	.380	.376	.386	.338	.329	.338	.423	.414	.376	.338	.39	.348	.471	.414
45.0	35.0	38.1	29.9	33.0	.8804	.380	.374	.398	.313	.313	.325	.435	.411	.386	.325	.39	.337	.509	.423
46.0	37.3	41.1	31.1	-26.3	-.7023	.380	.380	.410	.320	.330	.330	.420	.400	.370	.340	.39	.350	.489	.420
47.0	39.8	44.3	32.4	-21.9	-.5855	.380	.372	.414	.330	.338	.330	.422	.397	.380	.347	.38	.355	.456	.414
48.0	36.6	40.2	30.7	29.2	.7789	.380	.368	.421	.315	.315	.326	.432	.411	.379	.337	.40	.347	.474	.421
49.0	33.4	36.0	29.2	42.4	1.1314	.380	.352	.441	.307	.293	.322	.456	.411	.367	.337	.39	.322	.530	.411
50.0	38.5	42.7	31.7	-60.0	-1.6013	.380	.362	.417	.335	.326	.335	.417	.408	.380	.344	.39	.344	.462	.417

(Table Continues)

Table 17G — Inferred Pressurant Distribution, Scaling Run 310: Test Configuration 2 (Continued)

INFERRED PRESSURANT DISTRIBUTION - 5 C METER CHAMBER OBSTRUCTED GAS MIXI

TIME (SEC)	TEMP(DEG C) MEAN	AIR	PRESSURANT	BETA	BETA/TSTAR	PRESSURANT FRACTION MEAN	I = 1	2	3	4	5	6	7	8	9	10	11	12	13
VALVE FULLY CLOSED																			
51.0	37.1	40.9	31.0	13.4	.3586	.380	.359	.420	.329	.319	.329	.430	.410	.370	.339	.40	.349	.470	.420
52.0	34.8	37.9	29.8	26.9	.7179	.380	.362	.424	.337	.312	.325	.462	.412	.350	.325	.41	.337	.474	.412
53.0	38.2	42.3	31.5	-36.9	-.9840	.380	.360	.415	.341	.332	.341	.434	.406	.350	.360	.39	.350	.443	.415
54.0	40.3	45.0	32.6	-17.6	-.4704	.380	.373	.405	.340	.340	.349	.422	.397	.373	.357	.39	.349	.438	.405
55.0	38.5	42.7	31.7	14.5	.3860	.380	.373	.418	.346	.327	.346	.418	.391	.373	.355	.40	.346	.436	.409
56.0	33.4	35.9	29.3	60.0	1.6013	.380	.356	.431	.326	.311	.341	.461	.386	.356	.341	.43	.311	.476	.416
57.0	36.4	39.9	30.7	-40.6	-1.0821	.380	.365	.431	.354	.333	.354	.431	.376	.365	.354	.40	.333	.442	.398
58.0	39.9	44.4	32.6	-32.4	-.8654	.380	.362	.413	.354	.345	.354	.421	.379	.371	.354	.40	.345	.430	.413
59.0	37.8	41.7	31.4	18.2	.4856	.380	.372	.421	.353	.343	.353	.430	.372	.372	.353	.41	.333	.430	.401
60.0	35.7	39.0	30.3	22.6	.6027	.380	.374	.432	.351	.351	.339	.444	.363	.363	.328	.40	.328	.455	.409
61.0	36.8	40.4	30.9	-12.0	-.3207	.380	.380	.422	.348	.359	.337	.432	.369	.359	.348	.40	.337	.453	.401
62.0	39.0	43.3	32.1	-21.6	-.5775	.380	.375	.420	.337	.366	.348	.428	.375	.375	.348	.39	.339	.428	.393
63.0	37.8	41.7	31.4	11.1	.2952	.380	.379	.418	.350	.359	.340	.427	.369	.379	.350	.40	.340	.427	.398
64.0	36.9	40.6	31.0	8.8	.2346	.380	.388	.420	.357	.357	.336	.430	.368	.368	.347	.40	.336	.430	.399
65.0	35.3	38.5	30.2	18.2	.4862	.380	.397	.421	.349	.349	.325	.445	.385	.361	.337	.40	.325	.445	.397
66.0	36.2	39.7	30.6	-10.6	-.2823	.380	.397	.419	.364	.353	.342	.442	.375	.364	.342	.39	.331	.430	.386
67.0	38.5	42.6	31.8	-22.9	-.6101	.380	.390	.409	.363	.363	.341	.437	.381	.372	.353	.39	.335	.418	.390
68.0	40.3	44.9	32.8	-14.5	-.3860	.380	.384	.409	.368	.359	.343	.434	.376	.376	.351	.38	.351	.409	.401
69.0	37.8	41.7	31.4	20.9	.5575	.380	.381	.410	.371	.352	.342	.449	.371	.381	.352	.38	.333	.420	.401
70.0	35.9	39.2	30.4	20.5	.5470	.380	.388	.411	.377	.354	.343	.468	.366	.366	.331	.38	.331	.422	.400
71.0	36.2	39.7	30.6	-4.1	-.1092	.380	.394	.416	.372	.361	.339	.460	.372	.372	.339	.38	.328	.427	.383
72.0	38.7	42.9	31.9	-24.4	-.6509	.380	.397	.415	.369	.369	.351	.451	.369	.369	.342	.38	.333	.406	.387
73.0	38.3	42.4	31.7	3.1	.0837	.380	.401	.411	.364	.364	.345	.448	.373	.373	.345	.39	.326	.411	.392
74.0	37.3	41.0	31.2	10.1	.2689	.380	.400	.410	.359	.370	.339	.450	.380	.370	.339	.40	.329	.410	.390
75.0	37.1	40.8	31.1	1.8	.0478	.380	.405	.425	.364	.374	.354	.456	.364	.364	.333	.39	.333	.405	.374
76.0	34.1	36.9	29.6	36.8	.9821	.380	.411	.438	.356	.370	.342	.480	.370	.356	.315	.39	.315	.411	.384
77.0	33.9	36.7	29.5	2.7	.0729	.380	.411	.439	.369	.369	.341	.481	.369	.355	.313	.39	.313	.425	.369
78.0	36.9	40.6	31.0	-37.7	-1.0053	.380	.399	.420	.368	.368	.347	.461	.368	.357	.336	.39	.336	.409	.378
79.0	37.8	41.7	31.4	-8.8	-.2346	.380	.401	.420	.362	.362	.342	.459	.371	.371	.342	.39	.333	.410	.381
80.0	37.6	41.5	31.3	1.7	.0452	.380	.408	.418	.359	.369	.349	.458	.359	.369	.349	.38	.339	.399	.379
81.0	39.0	43.3	32.1	-12.8	-.3403	.380	.404	.413	.360	.369	.351	.449	.369	.369	.351	.38	.342	.404	.378
82.0	39.8	44.2	32.5	-5.8	-.1544	.380	.399	.416	.365	.373	.348	.450	.373	.373	.348	.38	.339	.399	.382
83.0	40.5	45.1	32.9	-5.4	-.1454	.380	.403	.411	.362	.370	.346	.444	.379	.370	.354	.37	.346	.403	.379
84.0	40.5	45.1	32.9	0.0	0.0000	.380	.401	.409	.368	.368	.344	.442	.377	.368	.360	.37	.344	.401	.385
85.0	40.1	44.7	32.7	2.7	.0716	.380	.398	.414	.364	.381	.339	.448	.373	.364	.356	.38	.348	.398	.381
86.0	39.9	44.4	32.6	1.4	.0366	.380	.395	.412	.369	.378	.344	.445	.378	.369	.352	.37	.352	.395	.378
87.0	39.2	43.5	32.2	5.7	.1520	.380	.403	.412	.368	.376	.341	.447	.376	.368	.359	.38	.341	.394	.376
88.0	37.1	40.8	31.1	19.5	.5193	.380	.403	.414	.362	.383	.342	.455	.373	.373	.352	.38	.342	.393	.373
89.0	36.8	40.4	30.9	3.7	.0985	.380	.404	.415	.362	.383	.341	.457	.372	.362	.351	.39	.341	.393	.372
90.0	36.2	39.7	30.6	5.8	.1554	.380	.414	.414	.359	.381	.348	.459	.370	.359	.348	.39	.337	.392	.370
91.0	34.5	37.4	29.8	22.4	.5984	.380	.428	.415	.362	.389	.336	.467	.362	.362	.336	.40	.336	.389	.362
92.0	34.8	37.8	29.9	-5.0	-.1324	.380	.424	.412	.361	.399	.336	.462	.361	.374	.336	.39	.323	.399	.361
93.0	33.6	36.2	29.3	18.6	.4961	.380	.425	.411	.367	.396	.338	.484	.352	.367	.338	.39	.323	.396	.352
94.0	34.6	37.6	29.8	-16.2	-.4313	.380	.431	.418	.367	.392	.341	.470	.354	.354	.341	.39	.328	.405	.354
95.0	35.9	39.2	30.4	-15.9	-.4240	.380	.421	.409	.364	.387	.352	.455	.352	.364	.341	.39	.330	.409	.364
96.0	37.3	41.0	31.2	-15.4	-.4100	.380	.425	.405	.364	.384	.354	.445	.354	.364	.344	.39	.344	.394	.374
97.0	37.5	41.3	31.3	-1.8	-.0469	.380	.422	.412	.362	.392	.352	.442	.362	.362	.342	.39	.342	.392	.372
98.0	39.4	43.8	32.3	-17.4	-.4639	.380	.421	.413	.360	.386	.352	.430	.369	.360	.343	.38	.352	.395	.378
99.0	39.2	43.5	32.2	1.5	.0389	.380	.422	.413	.360	.387	.351	.431	.369	.360	.342	.38	.351	.395	.378
100.0	38.5	42.6	31.8	6.1	.1619	.380	.420	.411	.356	.393	.346	.439	.365	.365	.346	.39	.346	.393	.374

UNCLASSIFIED

Table 17H — Inferred Pressurant Distribution, Scaling Run 311: Test Configuration 2

INFERRED PRESSURANT DISTRIBUTION - 5 C METER CHAMBER OBSTRUCTED GAS MI

TIME (SEC)	TEMP(DEG C) MEAN	AIR	PRESSURANT	BETA	BETA/TSTAR	PRESSURANT FRACTION MEAN I = 1	2	3	4	5	6	7	8	9	10	11	12	13
COMMENCE VALVE OPENING																		
0.0	28.8	28.8	37.9	1.1	0.0000	0.000	0.000	0.000	0.000	0.000	0.000	0.000	0.000	0.000	0.00	0.000	0.000	
1.0	31.1	31.1	28.6	79.3	2.2260	.028	-.101	-.021	.774	.019	-.021	-.180	.456	-.419	-.180	-.10	-.021	-.021	.178
VALVE FULLY OPEN																		
2.0	34.4	34.6	31.4	32.2	1.6584	.076	.112	.081	1.241	.112	.264	-.010	.081	-.468	-.071	-.13	-.041	-.163	-.010
3.0	37.1	37.7	31.6	-4.1	-.0960	.098	.070	-.029	.714	.021	.153	.054	.136	-.095	.070	.00	.070	.037	.070
4.0	38.8	40.2	31.1	18.3	1.0138	.146	.099	.044	.516	.044	.154	.099	.176	.088	.132	.08	.176	.132	.154
5.0	39.7	41.7	31.3	18.6	.9294	.188	.127	.088	.473	.088	.204	.156	.233	.165	.184	.10	.213	.194	.213
6.0	40.4	42.4	31.6	264.3	-.1572	.188	.143	.088	.383	.078	.180	.152	.226	.180	.208	.12	.226	.217	.235
7.0	40.7	43.2	31.7	18.1	.7358	.220	.177	.113	.333	.134	.221	.177	.273	.247	.229	.15	.264	.255	.255
8.0	41.0	44.0	32.0	17.4	.7399	.252	.211	.169	.336	.178	.261	.219	.294	.286	.277	.18	.302	.277	.286
9.0	41.1	44.3	32.1	17.1	.2399	.263	.204	.188	.311	.179	.270	.229	.336	.295	.286	.19	.319	.295	.311
10.0	41.0	44.5	32.4	18.7	.0317	.295	.236	.211	.310	.211	.342	.269	.367	.318	.318	.21	.359	.334	.342
11.0	41.0	44.7	32.4	16.2	.0810	.299	.251	.227	.300	.227	.341	.276	.366	.325	.333	.23	.366	.309	.325
12.0	41.0	44.9	32.6	17.4	.3631	.313	.262	.254	.311	.254	.367	.286	.367	.351	.335	.25	.359	.335	.335
13.0	40.9	45.0	32.7	18.9	.5616	.333	.276	.276	.317	.268	.358	.317	.391	.391	.350	.27	.375	.366	.366
14.0	40.7	44.9	32.9	19.3	.4885	.350	.295	.287	.320	.287	.361	.328	.411	.411	.386	.28	.403	.394	.378
15.0	40.5	44.9	33.0	19.4	.5484	.368	.322	.314	.330	.314	.397	.347	.414	.414	.406	.29	.414	.406	.406
COMMENCE VALVE CLOSURE																		
16.0	40.5	44.8	32.9	14.6	-.0401	.366	.316	.300	.333	.300	.367	.350	.426	.426	.400	.30	.417	.409	.409
17.0	40.5	44.6	33.3	20.5	.5840	.383	.332	.332	.341	.314	.402	.367	.429	.455	.411	.31	.438	.429	.420
VALVE FULLY CLOSED																		
18.0	40.1	44.4	33.6	15.1	.4313	.395	.335	.335	.344	.326	.381	.363	.447	.493	.400	.34	.456	.465	.447
19.0	35.6	38.5	31.1	43.7	1.2455	.395	.341	.341	.300	.327	.381	.422	.476	.463	.395	.34	.463	.463	.422
20.0	35.4	38.3	31.1	2.3	.0646	.395	.344	.344	.289	.344	.344	.413	.468	.482	.385	.34	.455	.482	.441
21.0	36.1	39.2	31.4	-8.7	-.2488	.395	.347	.360	.296	.322	.335	.412	.463	.476	.399	.36	.463	.463	.438
22.0	35.1	37.8	30.9	13.4	.3828	.395	.344	.344	.258	.344	.315	.430	.445	.488	.402	.33	.473	.517	.445
23.0	35.8	38.7	31.2	-9.2	-.2619	.395	.357	.370	.290	.330	.330	.424	.437	.464	.397	.34	.450	.504	.437
24.0	35.3	38.1	31.0	6.8	.1938	.395	.340	.368	.297	.326	.312	.424	.467	.467	.382	.34	.452	.509	.452
25.0	35.8	38.7	31.2	-6.8	-.1938	.395	.344	.357	.317	.317	.304	.424	.464	.464	.357	.34	.464	.517	.464
26.0	34.6	37.1	30.6	16.8	.4770	.395	.330	.346	.300	.300	.269	.437	.483	.468	.361	.34	.468	.560	.468
27.0	30.9	32.0	29.2	81.3	2.3138	.395	.236	.306	.166	.201	.097	.446	.621	.586	.271	.27	.551	.796	.586
28.0	37.5	40.9	32.3	-107.0	-3.0459	.395	.327	.362	.315	.327	.292	.397	.467	.478	.350	.35	.455	.537	.478
29.0	34.7	37.3	30.8	33.3	.9481	.395	.298	.359	.282	.282	.251	.406	.483	.498	.328	.37	.467	.606	.498
30.0	30.7	31.7	29.2	89.0	2.5343	.395	.133	.254	.092	.133	.011	.417	.620	.620	.254	.33	.579	.985	.701
31.0	34.0	36.8	31.2	-87.1	-2.4787	.395	.270	.359	.270	.270	.217	.413	.502	.520	.324	.35	.466	.645	.520
32.0	36.8	39.4	32.4	-26.9	-.7655	.395	.291	.376	.291	.291	.248	.419	.462	.490	.334	.39	.448	.590	.505
33.0	31.9	33.3	29.9	74.8	2.1301	.395	.168	.434	.257	.168	.109	.434	.522	.551	.227	.43	.463	.758	.610
34.0	36.0	38.4	32.2	-68.0	-1.9368	.395	.269	.430	.317	.269	.237	.430	.462	.478	.301	.41	.446	.590	.494
35.0	32.8	34.4	30.4	49.1	1.3980	.395	.207	.454	.257	.232	.134	.429	.503	.503	.257	.47	.478	.675	.528
36.0	35.3	37.5	31.8	-40.7	-1.1594	.395	.257	.449	.309	.292	.239	.431	.449	.466	.292	.46	.431	.571	.484
37.0	32.3	33.7	30.1	52.0	1.4814	.395	.198	.473	.225	.225	.115	.446	.501	.529	.280	.50	.446	.666	.529
38.0	32.5	34.0	30.2	-4.2	-.1209	.395	.219	.485	.272	.245	.139	.458	.458	.485	.272	.51	.432	.671	.485
39.0	33.7	35.5	30.9	-24.9	-.7089	.395	.263	.480	.307	.307	.220	.458	.437	.458	.285	.45	.393	.610	.458
40.0	33.2	34.8	30.6	9.9	.2810	.395	.267	.478	.314	.314	.173	.478	.408	.455	.290	.47	.408	.619	.455
41.0	34.7	36.8	31.5	-26.6	-.7578	.395	.291	.460	.328	.328	.234	.460	.404	.422	.310	.47	.404	.573	.441
42.0	29.8	30.0	29.7	121.8	3.4672	.395	-1.500	2.669	-1.121	-.363	-3.016	1.153	.395	.774	-1.121	2.66	.016	3.806	.774
43.0	34.2	34.6	33.6	-117.5	-3.3442	.395	-.173	1.111	.041	.255	-.494	.683	.362	.469	-.173	.89	.255	1.325	.576
44.0	33.9	34.2	33.3	5.8	.1656	.395	-.157	1.189	-.045	.179	-.606	.628	.516	.404	-.157	1.07	.179	1.414	.516
45.0	33.0	33.3	32.5	16.5	.4684	.395	-.178	1.107	-.178	.336	-.821	.721	.593	.336	-.050	1.23	.207	1.364	.464
46.0	34.2	34.6	33.6	-22.2	-.6321	.395	.058	1.127	-.049	.486	-.584	.806	.486	.272	-.156	1.02	.165	1.127	.379
47.0	29.5	29.5	29.6	134.0	3.8160	.395	2.450	-5.838	3.370	-.314	8.897	-3.997	.608	1.529	5.213	-4.91	3.370	-6.760	1.529
48.0	33.8	33.7	34.2	-131.5	-3.7450	.395	.851	-.677	1.042	.468	2.188	-.486	.469	.277	1.424	-.48	.851	-1.059	.277
49.0	34.2	34.0	34.5	-5.8	-.1656	.395	.647	-.445	.029	.465	1.922	-.627	.647	.283	1.375	-.26	1.011	-.992	.283
50.0	29.5	29.6	29.4	134.0	3.8160	.395	-.280	2.854	-.908	-.280	-5.297	4.109	-.908	.974	-2.162	2.85	-1.535	5.990	-.280

(Table Continues)

Table 17H — Inferred Pressurant Distribution, Scaling Run 311: Test Configuration 2 (Continued)

INFERRED PRESSURANT DISTRIBUTION - 5 C METER CHAMBER OBSTRUCTED GAS MIXI

TIME (SEC)	TEMP(DEG C) MEAN	AIR	PRESSURANT	BETA	BETA/TSTAR	PRESSURANT FRACTION MEAN I = 1	2	3	4	5	6	7	8	9	10	11	12	13
VALVE FULLY CLOSED																		
51.0	34.7	35.1	34.2	-137.3	-3.9085	.395	.155	.732	.155	.155	-.653	.964	.271	.617	-.076	.73	.155	1.310	.617
52.0	32.6	32.9	32.3	37.4	1.0642	.395	-.092	.858	.066	.225	-1.042	1.016	.225	.699	-.250	1.01	.066	1.807	.541
53.0	31.1	31.2	30.8	44.7	1.2720	.395	.002	.930	.002	.002	-1.853	1.162	.234	.930	-.229	1.16	-.229	2.321	.698
54.0	36.1	36.5	35.5	-92.0	-2.6184	.395	.150	.536	.247	.150	-.427	.632	.343	.728	.150	.63	.247	1.113	.632
55.0	33.3	33.6	32.9	41.1	1.1700	.395	-.004	.678	.133	.133	-.686	.678	.269	.815	-.004	.81	.133	1.497	.678
56.0	31.1	31.2	30.8	58.0	1.6507	.395	-.238	.904	-.238	-.238	-1.608	.904	.448	1.361	-.238	.90	-.009	2.503	.676
57.0	34.7	35.1	34.2	-77.8	-2.2163	.395	.015	.576	.127	.127	-.658	.576	.352	.913	.127	.68	.240	1.474	.576
58.0	34.9	35.3	34.4	-2.5	-.0721	.395	.048	.488	.048	.158	-.611	.598	.268	1.037	.048	.59	.268	1.477	.708
59.0	30.9	31.1	30.7	85.3	2.4272	.395	-.127	.395	-.388	-.388	-1.955	.917	.395	1.700	-.388	.91	.134	2.745	1.178
60.0	29.0	28.9	29.1	144.4	4.1114	.395	1.678	-.622	2.253	1.678	5.702	-1.196	.528	-2.347	1.678	-.04	1.103	-4.646	-.622
61.0	33.3	32.4	34.8	-160.4	-4.5658	.395	.511	.348	.470	.511	.798	.266	.389	.225	.470	.34	.470	.021	.307
62.0	35.6	34.3	37.6	-34.9	-.9942	.395	.505	.353	.444	.505	.688	.292	.414	.261	.444	.35	.414	.139	.322
63.0	34.7	33.6	36.5	12.0	.3407	.395	.488	.354	.455	.488	.724	.253	.421	.253	.488	.35	.421	.118	.320
64.0	30.6	30.2	31.1	95.0	2.7041	.395	.770	.148	.563	.666	1.496	-.060	.355	.044	.666	.14	.563	-.371	.148
65.0	29.3	29.2	29.5	91.9	2.6162	.395	1.162	-.597	.576	.869	3.507	-.890	.576	-.304	1.162	-.30	.869	-1.477	-.011
66.0	33.9	33.0	35.1	-141.0	-4.0150	.395	.531	.244	.435	.483	.914	.148	.435	.292	.531	.24	.483	.100	.292
67.0	35.8	34.7	37.4	-27.8	-.7927	.395	.535	.269	.421	.459	.801	.231	.421	.345	.497	.26	.421	.156	.307
68.0	34.6	33.7	35.9	16.8	.4770	.395	.482	.264	.439	.482	.874	.177	.439	.308	.526	.26	.439	.133	.308
69.0	31.2	30.8	32.0	70.4	2.0052	.395	.599	.086	.342	.514	1.284	-.000	.428	.257	.770	.08	.514	-.000	.257
70.0	30.2	29.9	30.7	47.1	1.3406	.395	.751	-.149	.365	.623	1.780	-.149	.494	.108	.880	-.14	.623	-.149	.108
71.0	30.9	30.5	31.5	-34.5	-.9816	.395	.580	.002	.388	.484	1.256	.002	.484	.291	.773	.00	.580	.002	.291
72.0	33.7	32.9	34.9	-69.6	-1.9812	.395	.546	.184	.391	.391	.907	.236	.391	.288	.598	.23	.443	.236	.288
73.0	34.6	33.7	35.9	-14.3	-.4073	.395	.504	.183	.413	.367	.826	.275	.413	.275	.596	.27	.459	.229	.321
74.0	33.2	32.5	34.2	24.1	.6852	.395	.498	.162	.386	.386	.947	.218	.442	.218	.667	.21	.499	.162	.330
75.0	32.5	31.8	33.4	15.1	.4313	.395	.473	.156	.410	.346	.981	.156	.473	.219	.727	.15	.537	.156	.346
76.0	31.1	30.6	31.7	40.9	1.1636	.395	.437	.077	.347	.347	1.246	.077	.437	.257	.796	.16	.617	-.013	.347
77.0	33.5	32.8	34.7	-60.9	-1.7336	.395	.452	.241	.399	.346	.873	.188	.399	.294	.610	.24	.557	.188	.346
78.0	34.9	34.0	36.3	-22.5	-.6413	.395	.449	.274	.361	.361	.799	.230	.405	.318	.580	.27	.493	.230	.361
79.0	32.6	32.0	33.6	39.8	1.1328	.395	.428	.244	.367	.367	.981	.182	.428	.244	.612	.18	.551	.182	.367
80.0	32.3	31.7	33.2	8.3	.2360	.395	.456	.193	.390	.324	.982	.193	.390	.259	.653	.12	.587	.193	.390
81.0	30.0	29.8	30.4	83.4	2.3742	.395	.637	-.149	.322	.322	1.736	.008	.479	.165	.951	-.30	.794	-.149	.322
82.0	29.3	29.2	29.5	67.7	1.9271	.395	.896	-.584	.304	.008	2.969	-.288	.600	.008	1.192	-.88	1.192	-.881	.600
83.0	31.6	31.1	32.3	-117.8	-3.3543	.395	.554	.059	.389	.224	1.131	.224	.471	.306	.636	.05	.636	.059	.389
84.0	34.6	33.7	35.8	-60.5	-1.7214	.395	.473	.231	.425	.328	.813	.279	.473	.328	.522	.23	.473	.182	.376
85.0	34.6	33.7	35.8	0.0	0.0000	.395	.436	.194	.436	.339	.824	.291	.436	.339	.581	.24	.485	.194	.339
86.0	34.2	33.4	35.4	5.5	.1553	.395	.446	.192	.446	.344	.851	.294	.446	.294	.547	.24	.496	.192	.344
87.0	32.8	32.2	33.8	25.8	.7356	.395	.419	.168	.482	.356	.922	.293	.419	.231	.608	.16	.545	.168	.356
88.0	32.1	31.6	33.0	16.6	.4719	.395	.362	.146	.434	.362	1.010	.290	.434	.290	.650	.14	.506	.145	.362
89.0	28.6	28.8	21.3	329.7	9.3879	.019	.017	.057	.017	.030	-.090	.044	.017	.044	-.023	.07	-.010	.057	.017
90.0	28.5	28.8	21.3	120.7	3.4365	.042	.038	.092	.038	.051	-.069	.065	.038	.065	.011	.07	.025	.078	.038
91.0	30.6	30.7	30.4	-175.6	-5.0000	.395	.246	1.539	.246	.892	-2.340	1.216	-.078	.892	-.401	1.53	-.078	1.216	.246
92.0	33.3	33.6	33.0	-77.2	-2.1992	.395	.260	.899	.420	.579	-1.019	.739	.260	.579	.100	.89	.260	.739	.420
93.0	33.9	34.1	33.5	-9.5	-.2709	.395	.224	.964	.372	.520	-.959	.816	.372	.668	.076	.81	.224	.668	.372
94.0	34.7	35.0	34.3	-13.9	-.3945	.395	.233	.760	.365	.629	-.823	.760	.233	.629	.233	.76	.233	.629	.496
95.0	32.8	33.0	32.5	33.7	.9586	.395	.112	.987	.287	.637	-1.287	.812	.287	.987	.112	.98	.112	.637	.462
96.0	31.6	31.8	31.3	31.2	.8888	.395	-.024	1.338	.430	.884	-1.840	.884	.430	.657	-.024	1.11	-.024	.657	.657
97.0	30.2	30.3	30.0	57.6	1.6409	.395	-.130	1.765	.628	1.007	-3.161	1.386	.249	.628	-.130	1.76	-.509	1.007	.628
98.0	29.7	29.8	29.6	39.4	1.1213	.395	-.337	2.307	.192	1.249	-4.568	1.778	.720	1.249	-.338	1.77	-.866	1.249	.720
99.0	29.7	29.8	29.6	0.0	0.0000	.395	-.378	2.266	.680	1.209	-4.609	1.737	.151	1.209	-.378	1.73	-.378	1.209	.680
100.0	31.6	31.8	31.3	-90.4	-2.5729	.395	.223	1.117	.223	.670	-1.565	.893	.447	.447	.223	1.11	-.001	.670	.670

XXX

UNCLASSIFIED

Table 18 — Mean Values of All Quantities, Test Configuration 2

MEAN VALUES OF ALL QUANTITIES

TIME SEC	TMP,C INIT	TMP,C	TMP,C	BETA	BETA/ THETA	X BAR	MEAN PRESSURANT FRACTIONS AT LOCATIONS I 1	2	3	4	5	6	7	8	9	10	11	12	13	TAU
0.0	27.3	27.3	17.1	.3	0.0000	0.000	0.000	0.000	0.000	0.000	0.000	0.000	0.000	0.000	0.000	0.000	0.00	0.000	0.000	0.00
1.0	29.5	29.5	22.6	24.3	-.0371	.019	.010	.019	.358	.034	.075	-.049	.119	-.202	-.047	-.043	-.02	-.036	.035	.05
1.4	30.9	31.1	25.7	27.6	1.6383	.038	.021	.016	.545	.032	.125	-.060	.151	-.243	-.037	-.045	-.01	-.043	.052	.10
2.0	32.6	33.0	26.0	92.3	.8590	.057	.032	-.000	.595	.011	.138	-.029	.127	-.174	.018	-.029	.02	-.022	.054	.15
2.5	33.8	34.4	26.3	52.7	.9737	.077	.058	.011	.592	.014	.149	.012	.118	-.121	.052	-.013	.05	.004	.062	.20
3.1	35.1	36.0	26.5	14.7	.6986	.096	.068	.008	.503	.012	.137	.047	.134	-.029	.092	.024	.09	.059	.092	.25
3.6	36.0	37.2	26.7	13.7	.6263	.115	.081	.024	.461	.021	.136	.068	.153	.031	.120	.055	.13	.094	.120	.30
4.0	36.7	38.2	26.9	15.9	.7891	.134	.096	.044	.423	.036	.141	.088	.176	.080	.146	.081	.16	.122	.148	.35
4.7	37.5	39.3	27.2	14.3	.6262	.153	.105	.061	.390	.051	.153	.109	.202	.127	.171	.102	.19	.155	.176	.40
5.4	38.0	40.2	27.5	15.1	.6059	.173	.125	.081	.366	.073	.173	.132	.219	.164	.190	.120	.21	.185	.200	.45
6.1	38.4	41.0	27.8	37.4	.5179	.192	.151	.106	.336	.100	.190	.158	.236	.198	.211	.141	.23	.210	.221	.50
6.8	38.7	41.5	28.2	19.4	.6625	.211	.169	.131	.320	.123	.210	.180	.260	.229	.230	.158	.25	.234	.241	.55
7.7	39.0	42.0	28.5	19.4	.5192	.230	.188	.155	.303	.148	.236	.200	.279	.255	.254	.176	.27	.256	.261	.60
8.4	39.1	42.4	28.8	17.6	.6099	.249	.206	.176	.299	.168	.257	.219	.299	.285	.277	.194	.29	.278	.284	.65
9.5	39.1	42.7	29.1	18.1	.5059	.268	.225	.198	.292	.188	.278	.239	.323	.304	.297	.214	.31	.303	.307	.70
10.6	39.0	42.9	29.3	18.4	.4238	.287	.246	.219	.286	.211	.309	.260	.340	.324	.320	.232	.34	.321	.325	.75
11.5	39.0	43.2	29.7	18.2	.5738	.307	.266	.243	.292	.236	.331	.281	.361	.346	.339	.255	.35	.337	.341	.80
12.8	38.9	43.3	29.9	19.0	.4528	.326	.284	.265	.299	.258	.356	.307	.374	.370	.360	.276	.37	.357	.355	.85
14.2	38.7	43.2	30.1	19.6	.4176	.345	.306	.287	.309	.276	.375	.328	.393	.391	.379	.293	.39	.378	.375	.90
15.7	38.6	43.3	30.3	19.3	.3651	.364	.332	.305	.324	.293	.397	.354	.408	.415	.397	.314	.41	.395	.388	.95
17.4	38.2	42.8	30.7	21.7	.3453	.383	.368	.314	.319	.305	.426	.393	.426	.443	.402	.327	.42	.420	.410	1.00
19.6	37.6	42.0	30.4	6.0	.0799	.386	.415	.334	.295	.321	.413	.442	.419	.429	.382	.326	.41	.416	.401	1.05
21.6	35.8	39.7	29.5	22.4	.5636	.388	.438	.331	.282	.313	.410	.481	.417	.423	.371	.329	.41	.430	.402	1.10
23.7	37.3	41.6	30.3	11.6	.1442	.390	.464	.343	.294	.309	.433	.507	.408	.401	.358	.341	.39	.418	.398	1.15
25.8	36.6	40.7	29.9	1.4	-.1106	.393	.485	.337	.293	.303	.444	.539	.403	.390	.348	.344	.39	.427	.396	1.20
27.8	35.9	39.7	29.7	8.8	.2822	.395	.492	.333	.273	.285	.442	.560	.413	.397	.334	.338	.39	.460	.408	1.25
29.9	36.2	40.2	29.9	9.4	.0620	.397	.513	.338	.285	.282	.473	.581	.393	.386	.333	.347	.37	.454	.400	1.30
32.0	36.0	39.9	29.8	-4.5	-.2004	.400	.534	.334	.282	.275	.492	.610	.386	.387	.330	.347	.37	.453	.394	1.35
34.0	35.2	38.7	29.4	27.0	.4026	.402	.551	.338	.279	.261	.499	.643	.382	.382	.313	.347	.35	.469	.400	1.40
36.1	35.2	38.7	29.5	16.1	.2738	.404	.578	.339	.272	.266	.518	.664	.374	.374	.315	.353	.35	.459	.392	1.45
38.2	36.2	40.1	29.9	-7.7	-.1053	.407	.606	.337	.272	.267	.553	.683	.368	.367	.313	.351	.34	.443	.385	1.50
40.2	35.4	38.9	29.6	-20.6	-.0452	.409	.631	.334	.271	.261	.569	.711	.357	.365	.309	.349	.33	.447	.380	1.55
42.3	35.0	38.4	29.4	9.2	-.0527	.411	.656	.329	.272	.259	.599	.736	.348	.351	.309	.344	.32	.442	.374	1.60
44.3	34.9	38.3	29.5	23.2	.3390	.414	.480	.576	.105	.185	.264	.840	.337	.390	.139	.588	.27	.794	.401	1.65
46.4	35.2	38.5	29.8	-1.3	.1422	.416	.652	.414	.219	.240	.552	.802	.347	.344	.248	.412	.29	520	.367	1.70
48.5	34.7	37.9	29.6	19.9	.2429	.418	.701	.397	.214	.265	.563	.856	.336	.330	.243	.409	.28	.496	.346	1.75
50.3	35.3	38.6	30.0	-32.0	-.3672	.421	.897	-.031	.446	.240	1.215	.583	.331	.364	.582	.029	.46	-.024	.374	1.80
52.6	34.2	37.3	29.5	49.1	.5361	.423	.769	.426	.197	.214	.433	1.055	.243	.366	.180	.442	.19	691	.288	1.85
54.7	34.8	37.9	29.9	-26.3	-.3432	.425	.788	.352	.230	.233	.622	.957	.287	.357	.224	.365	.25	.505	.353	1.90
56.7	34.9	38.1	29.8	14.3	.1941	.428	.813	.356	.214	.212	.548	.987	.278	.382	.222	.389	.22	571	.364	1.95
58.8	35.2	38.4	30.0	-11.9	-.0742	.430	.833	.333	.217	.222	.669	.967	.278	.379	.231	.357	.24	503	.354	2.00
60.8	34.8	37.9	30.0	-5.4	.0454	.432	.865	.320	.213	.220	.701	.976	.285	.383	.242	.338	.25	.484	.336	2.05
62.9	34.3	37.4	29.5	43.1	.4412	.435	.881	.289	.153	.160	.593	1.038	.283	.471	.183	.351	.24	.615	.391	2.10
65.0	33.8	36.6	29.5	-3.3	-.1770	.437	1.031	.244	.327	.312	1.131	.939	.282	.178	.321	.273	.29	.101	.245	2.15
67.0	35.0	38.0	30.4	-4.1	.1136	.439	1.008	.273	.248	.258	.953	1.012	.278	.287	.271	.284	.26	.291	.285	2.20
56.6	29.5	32.1	25.7	37.5	.4373	.394	1.036	.162	.215	.239	1.121	.904	.224	.189	.273	.183	.25	.123	.204	2.25
58.2	30.1	32.6	26.3	-23.2	-.3805	.396	1.015	.201	.196	.204	.974	.997	.221	.236	.226	.213	.21	232	.221	2.30
59.9	29.9	32.2	26.3	25.5	.3102	.399	1.032	.201	.194	.196	.999	1.020	.212	.236	.225	.205	.21	.231	.220	2.35
48.8	25.5	27.6	22.4	-4.0	.1000	.353	1.044	.094	.132	.163	1.109	.953	.173	.156	.215	.095	.18	.127	.140	2.40
50.1	24.9	26.6	22.3	14.9	.1739	.355	1.047	.130	.135	.129	1.023	1.021	.152	.174	.176	.133	.16	.176	.160	2.45

Table 19 — Normalized Mean Local Pressurant Fractions, Test Configuration 2

NORMALIZED MEAN LOCAL PRESSURANT FRACTIONS

LOCATIONS I

1	2	3	4	5	6	7	8	9	10	11	12	13	TAU
0.000	0.000	0.000	0.000	0.000	0.000	0.000	0.000	0.000	0.000	0.000	0.000	0.000	0.00
.026	.049	.922	.088	.192	-.127	.306	-.522	-.120	-.111	-.059	-.093	.089	.05
.054	.042	1.405	.083	.322	-.154	.388	-.625	-.094	-.116	-.038	-.112	.133	.10
.082	-.000	1.533	.029	.356	-.075	.328	-.449	.047	-.075	.071	-.056	.139	.15
.148	.027	1.526	.037	.385	.031	.305	-.313	.135	-.033	.150	.010	.159	.20
.176	.022	1.298	.030	.354	.120	.346	-.075	.237	.061	.250	.152	.237	.25
.208	.063	1.188	.055	.351	.175	.393	.081	.309	.141	.335	.242	.310	.30
.247	.113	1.091	.094	.364	.228	.455	.206	.376	.210	.419	.314	.381	.35
.270	.157	1.005	.131	.395	.281	.520	.329	.442	.264	.492	.399	.455	.40
.323	.208	.944	.189	.447	.341	.565	.424	.490	.308	.551	.477	.516	.45
.390	.275	.866	.258	.491	.407	.609	.512	.544	.363	.597	.542	.570	.50
.436	.339	.826	.318	.542	.463	.670	.591	.593	.409	.652	.602	.622	.55
.484	.400	.782	.380	.608	.516	.721	.658	.656	.453	.719	.660	.672	.60
.532	.453	.772	.434	.662	.566	.770	.734	.713	.499	.767	.718	.731	.65
.579	.510	.752	.484	.717	.617	.833	.785	.767	.551	.824	.781	.792	.70
.633	.566	.738	.544	.797	.671	.876	.835	.825	.599	.881	.828	.838	.75
.687	.627	.753	.609	.855	.726	.930	.892	.874	.659	.921	.868	.880	.80
.733	.684	.772	.665	.918	.791	.965	.954	.927	.711	.962	.920	.917	.85
.789	.740	.798	.711	.968	.846	1.012	1.008	.978	.754	1.011	.974	.968	.90
.857	.786	.835	.756	1.023	.912	1.053	1.071	1.023	.809	1.057	1.019	1.002	.95
.949	.810	.823	.787	1.100	1.013	1.098	1.142	1.036	.845	1.098	1.083	1.058	1.00
1.070	.861	.761	.927	1.065	1.141	1.082	1.106	.986	.842	1.073	1.073	1.035	1.05
1.128	.854	.728	.806	1.058	1.239	1.076	1.091	.957	.847	1.069	1.108	1.038	1.10
1.198	.883	.758	.797	1.117	1.307	1.051	1.033	.925	.880	1.026	1.079	1.025	1.15
1.250	.869	.755	.781	1.144	1.389	1.040	1.007	.898	.888	1.013	1.101	1.022	1.20
1.269	.859	.704	.735	1.139	1.443	1.064	1.025	.862	.872	1.022	1.187	1.053	1.25
1.324	.871	.734	.728	1.219	1.499	1.014	.996	.860	.895	.972	1.171	1.033	1.30
1.377	.861	.726	.710	1.268	1.574	.994	.997	.851	.895	.954	1.169	1.016	1.35
1.422	.872	.719	.674	1.286	1.658	.985	.985	.809	.896	.926	1.210	1.030	1.40
1.490	.874	.701	.685	1.335	1.711	.963	.964	.811	.911	.910	1.183	1.010	1.45
1.562	.870	.701	.688	1.426	1.761	.949	.947	.807	.906	.878	1.142	.994	1.50
1.626	.861	.699	.673	1.467	1.834	.919	.942	.796	.901	.858	1.152	.979	1.55
1.692	.849	.700	.669	1.544	1.899	.897	.905	.798	.886	.843	1.140	.964	1.60
1.238	1.496	.270	.478	.681	2.167	.868	1.005	.360	1.516	.713	2.049	1.034	1.65
1.682	1.067	.564	.620	1.424	2.069	.894	.886	.640	1.062	.747	1.342	.946	1.70
1.808	1.023	.552	.682	1.453	2.207	.868	.850	.626	1.054	.728	1.280	.892	1.75
2.314	-.081	1.151	.619	3.134	1.505	.854	.939	1.500	.074	1.188	-.063	.965	1.80
1.983	1.098	.509	.553	1.116	2.721	.625	.945	.465	1.140	.501	1.781	.742	1.85
2.033	.909	.593	.601	1.605	2.467	.740	.920	.579	.941	.658	1.302	.910	1.90
2.096	.917	.553	.547	1.413	2.546	.717	.984	.572	1.002	.579	1.472	.938	1.95
2.148	.859	.559	.573	1.726	2.494	.716	.976	.596	.919	.638	1.296	.913	2.00
2.230	.824	.550	.567	1.808	2.517	.735	.988	.623	.870	.663	1.249	.867	2.05
2.271	.746	.395	.412	1.530	2.676	.730	1.215	.473	.905	.623	1.587	1.008	2.10
2.658	.630	.844	.804	2.917	2.421	.728	.460	.827	.703	.766	.261	.632	2.15
2.599	.703	.639	.665	2.458	2.609	.717	.740	.699	.733	.683	.750	.735	2.20
2.671	.418	.555	.617	2.890	2.331	.577	.488	.704	.473	.645	.318	.527	2.25
2.617	.519	.504	.526	2.513	2.572	.570	.608	.582	.549	.564	.597	.570	2.30
2.662	.519	.500	.506	2.576	2.631	.548	.610	.579	.530	.548	.595	.567	2.35
2.693	.241	.341	.421	2.861	2.458	.446	.403	.555	.244	.483	.328	.362	2.40
2.701	.336	.349	.333	2.638	2.634	.392	.449	.455	.343	.417	.454	.413	2.45

UNCLASSIFIED

Table 20 — Standard Deviation of Mean Local Pressurant Fractions, Test Configuration 2

STANDARD DEVIATION OF MEAN LOCAL PRESSURANT FRACTIONS

LOCATIONS I

1	2	3	4	5	6	7	8	9	10	11	12	13	TAU
0.000	0.000	0.000	0.000	0.000	0.000	0.000	0.000	0.000	0.000	0.000	0.000	0.000	0.00
.125	.174	319	.179	.133	.121	.228	229	.140	.121	.103	.122	.130	.05
.095	.156	.431	.166	.138	.109	.276	.286	.168	.118	.117	.125	.148	.10
.094	.099	.582	.136	.119	.083	.107	.338	.172	.140	.106	.153	.073	.15
.118	.092	.643	.127	.152	.079	.066	.341	.156	.136	.129	.171	.100	.20
.098	.076	325	.080	.092	.075	.054	.150	.110	.082	.112	.072	.064	.25
.073	.071	264	.075	.073	.069	.047	.126	.082	.062	.073	.071	.055	.30
.056	.058	204	.063	.058	.062	.047	.102	.060	.042	.041	.066	.050	.35
.047	.040	.159	.045	.042	.057	.048	.068	.047	.026	.031	.045	.045	.40
.037	.027	.139	.037	.040	.047	.045	.048	.036	.025	.035	.026	.040	.45
.018	.025	.077	.026	.027	.034	.032	.047	.022	.024	.032	.021	.030	.50
.017	.029	.081	.031	.037	.042	.039	.053	.027	.032	.030	.023	.027	.55
.018	.021	.084	.034	.036	.041	.042	.058	.015	.027	.030	.020	.022	.60
.022	.023	.077	.033	.040	.037	.040	.055	.022	.024	.036	.020	.024	.65
.020	.026	.065	.040	.057	.036	.040	.053	.023	.028	.025	.025	.025	.70
.020	.028	.063	.035	.050	.031	.036	.048	.028	.027	.031	.018	.021	.75
.028	.027	.064	.034	.047	.037	.033	.049	.018	.019	.024	.019	.014	.80
.031	.031	068	.039	.045	.039	.047	.054	.027	.015	.038	.031	.027	.85
.031	.028	.063	.035	.035	.043	.052	.054	.033	.021	.040	.032	.026	.90
.053	.038	.072	.051	.039	.062	.069	.051	.022	.023	.033	.035	.042	.95
.205	.078	108	.097	.199	.205	.106	.066	.044	.058	.072	.086	.086	1.00
.351	.136	.123	.149	.380	.350	.135	.077	.063	.094	.092	.111	.105	1.05
.522	.166	.153	.177	.567	.503	.163	.102	.080	.140	.124	.156	.137	1.10
.688	.214	.192	.211	.728	.669	.185	.099	.102	.178	.136	.177	.165	1.15
.860	.244	225	.242	.902	.828	.214	.126	.123	.217	.163	.220	.198	1.20
1.048	.279	264	274	1.097	1.000	.284	.197	.151	.255	.216	.350	.262	1.25
1 218	.320	299	.302	1 245	1.171	.277	.188	.173	.285	.217	.334	.275	1.30
1.390	.347	329	.328	1.410	1.335	.303	215	.195	.319	.236	.356	299	1.35
1.570	.388	.365	.369	1.593	1.495	.331	.246	.229	.354	.255	.425	.352	1.40
1.735	.426	394	.396	1.756	1.667	.353	.249	.248	.397	.280	.417	.354	1.45
1.899	.458	431	431	1.906	1.840	.374	.275	.273	.428	.290	.431	.378	1.50
2.067	.493	462	.457	2.074	2.005	.392	298	.301	.463	.312	.472	.399	1.55
2.233	.524	.490	.490	2.229	2 173	.414	.309	.330	.488	.337	.489	.426	1 60
2.960	1.935	1.184	.700	3.735	2.336	.437	.470	1.174	1.891	.418	2.692	.555	1.65
2.655	944	.616	.560	2.747	2.499	.487	.353	.554	.836	.392	1.001	.487	1.70
2.781	.926	.658	.614	2.917	2.651	.508	383	.553	.849	.416	.852	.493	1.75
2.837	2.307	1.445	.625	4 129	3 527	.536	.495	2.034	1.955	1.232	2.817	.591	1.80
3.090	1.112	.724	674	3.815	3.094	.685	.516	.934	1.137	.701	2.121	.626	1.85
3.270	.818	.708	.697	3.439	3.147	.559	.532	.606	.801	.491	1.141	.613	1.90
3.439	.870	742	.749	3.871	3.313	.581	.679	.620	.927	.598	1.547	.675	1.95
3.616	.844	.772	.779	3.745	3.493	.609	.697	.597	.847	.542	1.250	.696	2.00
3.774	.843	.799	.807	3 877	3.670	.644	.754	.579	.823	.554	1.206	.689	2.05
3.959	.836	938	.935	4.410	3.818	.674	1 223	.760	.916	.583	1.985	.955	2.10
4.011	.893	1.118	1.037	4.149	4.124	.707	.971	.812	.812	.704	1.733	.731	2.15
4 202	.892	.918	.929	4.110	4.210	.734	.610	.671	.840	.648	.755	.722	2.20
4 408	983	.995	1.057	4.467	4.561	.786	.716	.893	.907	.795	1.199	.781	2.25
4.593	961	.934	1 005	4 484	4.623	812	.689	.770	.912	.740	.834	.793	2.30
4.767	.999	1.028	1.033	4.647	4.792	.835	.721	.802	.935	.759	.860	821	2.35
4.968	1.027	1.035	1.100	4.871	5.065	.880	.730	.984	.960	.850	.886	.829	2.40
5.147	1.042	1.077	1.065	5.002	5.179	.872	.761	.881	.966	.814	.893	.866	2.45

Table 21 — Deviations of Mean Local Pressurant Fractions, Test Configuration 2

DEVIATIONS OF MEAN LOCAL PRESSURANT FRACTIONS

LOCATIONS I

1	2	3	4	5	6	7	8	9	10	11	12	13	TAU
0.000	0.000	0.000	0.000	0.000	0.000	0.000	0.000	0.000	0.000	0.000	0.000	0.000	0.00
-.023	.000	.873	.039	.143	-.176	.256	-.571	-.170	-.161	-.108	-.142	.040	.05
-.045	-.057	1.306	-.015	.223	-.253	.290	-.724	-.193	-.215	-.137	-.210	.034	.10
-.066	-.148	1.385	-.119	.208	-.223	.180	-.597	-.101	-.223	-.077	-.204	-.009	.15
-.049	-.170	1.329	-.160	.187	-.166	.108	-.510	-.063	-.230	-.047	-.187	-.038	.20
-.071	-.226	1.051	-.218	.106	-.128	.098	-.323	-.011	-.187	.003	-.095	-.011	.25
-.088	-.234	.892	-.241	.055	-.122	.097	-.215	.012	-.156	.038	-.055	.014	.30
-.099	-.233	.745	-.252	.018	-.118	.109	-.140	.030	-.136	.073	-.032	.035	.35
-.126	-.239	.610	-.264	-.000	-.115	.124	-.067	.046	-.132	.096	.004	.059	.40
-.122	-.237	.499	-.256	.002	-.104	.121	-.021	.045	-.137	.106	.032	.072	.45
-.104	-.220	.371	-.237	-.004	-.087	.115	.017	.050	-.131	.103	.048	.076	.50
-.107	-.204	.282	-.225	-.001	-.080	.127	.048	.050	-.134	.109	.059	.078	.55
-.109	-.192	.190	-.212	.016	-.076	.129	.065	.063	-.140	.127	.067	.080	.60
-.110	-.189	.130	-.208	.020	-.076	.128	.092	.071	-.143	.125	.076	.089	.65
-.112	-.181	.061	-.207	.026	-.074	.142	.094	.076	-.140	.133	.091	.101	.70
-.107	-.175	-.002	-.196	.056	-.070	.135	.094	.085	-.142	.140	.087	.098	.75
-.104	-.164	-.037	-.181	.064	-.065	.139	.102	.083	-.132	.131	.077	.089	.80
-.107	-.156	-.068	-.175	.078	-.049	.125	.114	.087	-.129	.122	.080	.077	.85
-.100	-.149	-.091	-.177	.079	-.043	.123	.119	.090	-.134	.122	.085	.079	.90
-.082	-.153	-.104	-.183	.084	-.026	.114	.132	.084	-.130	.118	.080	.063	.95
-.039	-.178	-.165	-.201	.112	.025	.110	.154	.048	-.143	.110	.094	.070	1.00
.075	-.133	-.233	-.167	.071	.147	.087	.112	-.008	-.152	.079	.079	.041	1.05
.128	-.146	-.272	-.194	.058	.239	.076	.091	-.043	-.153	.069	.108	.038	1.10
.191	-.123	-.249	-.209	.111	.301	.045	.027	-.082	-.126	.020	.073	.019	1.15
.238	-.143	-.257	-.231	.132	.377	.028	-.005	-.114	-.124	.001	.088	.010	1.20
.250	-.159	-.314	-.284	.121	.425	.046	.006	-.156	-.146	.004	.168	.035	1.25
.300	-.153	-.290	-.296	.195	.475	-.010	-.028	-.164	-.129	-.053	.146	.009	1.30
.347	-.169	-.304	-.321	.238	.544	-.036	-.034	-.179	-.135	-.076	.139	-.014	1.35
.386	-.164	-.318	-.363	.250	.621	-.051	-.052	-.228	-.141	-.111	.173	-.006	1.40
.447	-.168	-.341	-.358	.292	.669	-.079	-.079	-.231	-.132	-.133	.141	-.032	1.45
.513	-.179	-.348	-.360	.378	.713	-.100	-.101	-.242	-.143	-.170	.093	-.054	1.50
.572	-.194	-.356	-.381	.413	.780	-.135	-.113	-.258	-.154	-.197	.098	-.076	1.55
.632	-.211	-.360	-.392	.484	.838	-.164	-.156	-.263	-.175	-.218	.079	-.096	1.60
.171	.420	-.797	-.589	-.386	1.101	-.199	-.062	-.707	.449	-.353	.982	-.033	1.65
.610	-.096	-.508	-.453	.351	.996	-.178	-.186	-.433	-.011	-.325	.269	-.126	1.70
.729	-.056	-.527	-.396	.374	1.128	-.211	-.229	-.453	-.025	-.351	.201	-.186	1.75
1.229	-1.165	.066	-.466	2.049	.420	-.230	-.145	.415	-1.010	.103	-1.147	-.120	1.80
.892	.007	-.582	-.538	.025	1.630	-.466	-.146	-.626	.049	-.590	.690	-.349	1.85
.936	-.138	-.504	-.496	.508	1.371	-.357	-.177	-.518	-.156	-.439	.206	-.186	1.90
.993	-.186	-.550	-.556	.310	1.443	-.386	-.119	-.531	-.101	-.524	.369	-.165	1.95
1.039	-.250	-.550	-.536	.617	1.385	-.393	-.133	-.513	-.190	-.471	.187	-.196	2.00
1.115	-.291	-.565	-.548	.693	1.402	-.380	-.127	-.492	-.245	-.452	.134	-.249	2.05
1.150	-.375	-.726	-.709	.409	1.555	-.390	.094	-.648	-.216	-.497	.466	-.113	2.10
1.531	-.497	-.283	-.323	1.790	1.294	-.399	-.667	-.300	-.424	-.361	-.866	-.495	2.15
1.466	-.430	-.494	-.468	1.325	1.476	-.417	-.394	-.435	-.400	-.450	-.383	-.398	2.20
1.654	-.598	-.462	-.400	1.874	1.314	-.440	-.529	-.313	-.544	-.372	-.699	-.490	2.25
1.595	-.504	-.518	-.496	1.490	1.550	-.453	-.415	-.441	-.474	-.459	-.425	-.452	2.30
1.633	-.509	-.529	-.522	1.547	1.603	-.481	-.419	-.450	-.499	-.489	-.434	-.462	2.35
1.783	-.669	-.569	-.489	1.950	1.547	-.465	-.508	-.356	-.667	-.428	-.582	-.549	2.40
1.784	-.581	-.568	-.583	1.721	1.717	-.525	-.468	-.462	-.574	-.500	-.463	-.504	2.45

8 CASES

UNCLASSIFIED