NRL Report 8

NRL 5-m^3 Chamber Pressurization Experiment: Pressurant Concentration Histories

J. P. Stone, J. I. Alexander, and F. W. Williams

Combustion and Fuels Branch
Chemistry Division

R. C. Corlett

University of Washington

September 8, 1981

NAVAL RESEARCH LABORATORY
Washington, D.C.

Approved for public release; distribution unlimited.

SECURITY CLASSIFICATION OF THIS PAGE (When Data Entered)

REPORT DOCUMENTATION PAGE		READ INSTRUCTIONS BEFORE COMPLETING FORM
1. REPORT NUMBER NRL Report 8503	2. GOVT ACCESSION NO.	3. RECIPIENT'S CATALOG NUMBER
4. TITLE (and Subtitle) NRL 5-m^3 CHAMBER PRESSURIZATION EXPERIMENT: PRESSURANT CONCENTRATION HISTORIES		5. TYPE OF REPORT & PERIOD COVERED Final report on one phase of a continuing NRL problem. 6. PERFORMING ORG. REPORT NUMBER
7. AUTHOR(s) J. P. Stone, R. C. Corlett,* J. I. Alexander, and F. W. Williams		8. CONTRACT OR GRANT NUMBER(s)
9. PERFORMING ORGANIZATION NAME AND ADDRESS Naval Research Laboratory Washington, DC 20375		10. PROGRAM ELEMENT, PROJECT, TASK AREA & WORK UNIT NUMBERS 61153N-1-3 RR013-01-44 NRL Problem 61-0056-0-1
11. CONTROLLING OFFICE NAME AND ADDRESS Office of Naval Research Arlington, VA 22217		12. REPORT DATE September 8, 1981 13. NUMBER OF PAGES 131
14. MONITORING AGENCY NAME & ADDRESS(if different from Controlling Office) Naval Research Laboratory Washington, DC 20375 ATT: A. Schindler, Code 6000		15. SECURITY CLASS. (of this report) UNCLASSIFIED 15a. DECLASSIFICATION/DOWNGRADING SCHEDULE

16. DISTRIBUTION STATEMENT (of this Report)

Approved for public release; distribution unlimited.

17. DISTRIBUTION STATEMENT (of the abstract entered in Block 20, if different from Report)

18. SUPPLEMENTARY NOTES

*University of Washington
Seattle, WA 98105

19. KEY WORDS (Continue on reverse side if necessary and identify by block number)

Fire suppression
Enclosed spaces
Gas mixing
Scale modeling

20. ABSTRACT (Continue on reverse side if necessary and identify by block number)

Gas-mixing rates are inferred at interior locations of a minimally cluttered 5-m^3 chamber from temperature measurements during pressurization from 1 to 2 atmospheres (101.3 to 202.6 kPa) with an inert pressurant gas, a proposed method of fire suppression. Analysis for this inference is presented and experimental data are reduced accordingly. In addition, the data support a scale modeling theory already reported.

These findings show that, for injection times of 10 to 30 seconds, good mixing is experienced in 1.5 injection times in this minimally cluttered space.

DD FORM 1 JAN 73 1473 EDITION OF 1 NOV 65 IS OBSOLETE
S/N 0102-014-6601

SECURITY CLASSIFICATION OF THIS PAGE (When Data Entered)

CONTENTS

INTRODUCTION 1

DESCRIPTION OF EXPERIMENT 1

DESCRIPTION OF ANALYSIS 4

REDUCED DATA 6

DISCUSSION 7

LIST OF SYMBOLS 128

REFERENCES 129

NRL 5-m^3 CHAMBER PRESSURIZATION EXPERIMENT: PRESSURANT CONCENTRATION HISTORIES

INTRODUCTION

Carhart and Fielding [1] proposed suppression of unwanted, free-burning fires in pressurizable spaces by the injection of nitrogen gas. Preliminary tests have demonstrated their concept [2-5]. Liquid-fuel (class B) fires in 0.27- and 5-m^3 chambers at one atmosphere are quickly controlled by addition of nitrogen; flames extinguish at oxygen concentrations of 12 to 14% by volume, yet partial pressure of oxygen is essentially unchanged. Thus, spaces remain habitable provided extinguishment is timely and excessive accumulation of toxic combustion products is avoided. Additional advantages of this suppression technique as compared to others include the inertness of nitrogen gas to machines, electronics, electrical wiring, and air-purification devices. Further, a space can easily be returned to normal condition following a suppression action.

This promising method, however, poses questions and problems that require exploration, some perhaps not yet defined. Since fire suppression by nitrogen pressurization may be a last-resort method used only after other methods have failed, well-developed-fire encounters are likely. Rapid extinguishment becomes imperative—seconds may count. Thus, knowledge of the mixing rates of pressurant and resident gases is essential, particularly at fire seats. Such conditions as extreme geometries, cluttered spaces, nozzle design and location, injection times, or combinations of these affect gas-mixing rates. As a result, it is conceivable that pockets of poorly mixed gas may in one case increase fire intensity or in the other reduce the quality of the atmosphere to support life.

To explore pressurant gas concentration profiles during injection and to implement scale modeling techniques, different sizes of enclosures with similar geometry are used. In this way, identity of controlling parameters allows inference of concentration profiles in other similar spaces and provides additional insight as to controlling mechanisms.

The Naval Research Laboratory (NRL) 5-m^3 chamber was one enclosure used in these studies. This set of experiments was with minimal clutter and no fire. Pressurant gas injection times varied from 8 to 30 s, depending upon nozzle size and configuration. Because of these short injection times, large experimental distances (approximately 8 m), the relatively slow response times of chemical detectors, and the need for information at several points in space simultaneously, we used fine-wire thermocouples to measure local temperature histories. By this indirect method, we exploited temperature differences between the pressurant gas stream and resident gas to infer local pressurant concentration histories [6].

In this report, we describe the analysis and the evaluation of previously reported temperature and pressure measurements.

DESCRIPTION OF EXPERIMENT

We have described the experiment previously [7-11]. Briefly, we blew pressurant gas from a pressure tank at 6.5 atmospheres (659 kPa) via an actuated control valve, a 3-in. (7.62-cm) pipe, and one, two, or three nozzles into a 5-m^3 chamber, initially containing one atmosphere of ambient air. This is schematically shown in Fig. 1. We increased chamber pressures from one to two atmospheres (101.3

Manuscript submitted June 9, 1981.

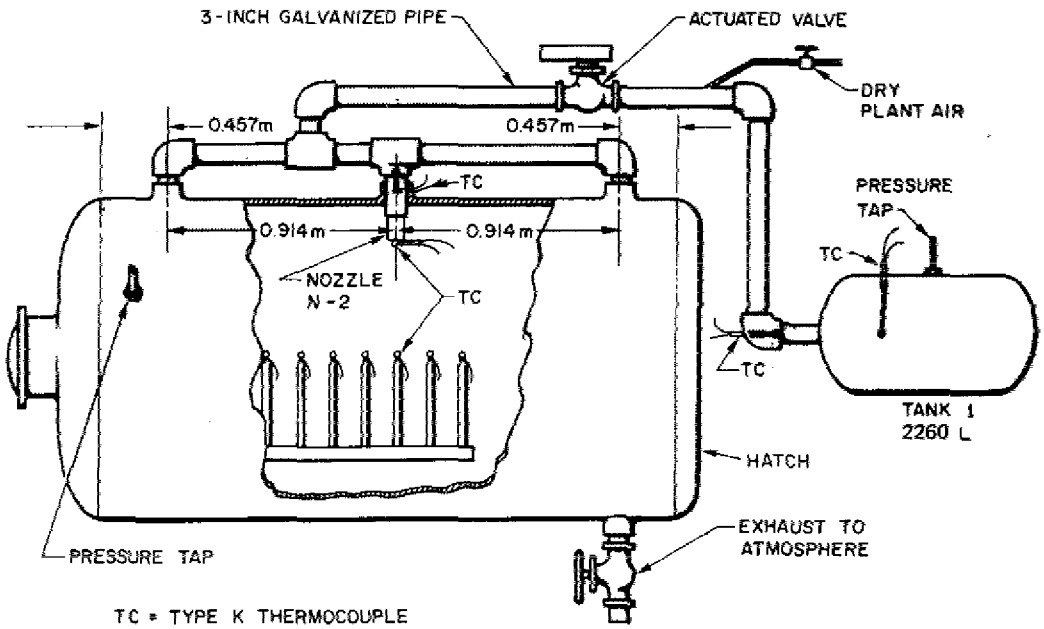

Fig. 1 — Schematic of apparatus

kPa to 202.6 kPa) while monitoring interior temperatures and pressures. To collect these data, we used two Doric Data Loggers, each coupled to a magnetic-tape device. Each system scanned ten channels with a scan time of about 0.5 s so that each thermocouple and pressure transducer output was recorded at 0.5-s intervals. The two systems produced data on two magnetic tapes with channels 60 to 69 on one and 70 to 79 on the other. We assured simultaneous operation of the two systems by use of a common control circuit.

We conducted gas-mixing experiments with minimal clutter. The parameters are summarized in Table 1. There are 12 sets of experiments: all sets but the first have three experiments each; the first has nine. To generate the 12 sets, we adjusted three variables: nozzle array, nozzle diameter, and thermocouple array. The three nozzle arrays included No. I, the center nozzle only; No. II, the center plus one end nozzle; and No. III, all three nozzles (see Fig. 1). We used two nozzle diameters (2.54 cm and 1.52 cm) and two thermocouple arrays. In thermocouple array I, we placed 13 thermocouples along the chamber axis in the airlock end of the chamber (see Fig. 1 and subtable in Table 2A). In array II, we shifted each thermocouple in array I by 0.457 m along radial lines, normal to the chamber axis and making 45° angles with the horizontal, when viewed from the hatch end of the chamber (see Fig. 2). Table 1 gives set numbers, designated run numbers, and NRL Memorandum Report numbers.

Our format for collecting data for each experiment was the same. With the pressure tank at 6.5 atmospheres and ambient temperature and the chamber at 1 atmosphere and ambient temperature, we collected data for 30 s, then opened the control valve and blew pressurant gas through the nozzles into the chamber until its pressure increased to 2 atmospheres. We then closed the control valve and continued collecting data for a total time of 4 min. We edited the two data tapes and copied the edited data onto a single tape with channels 60-69 preceeding 70-79 for each experimental run.

Table 1 — Summary of 41 Gas-Mixing Experiments with Minimal Clutter

Set Number	Nozzle Array	Nozzle Diameter (cm)	Thermo-Couple Array	Number of Runs	Run Numbers	NRL Memo. Rpt. No.	Ref. No.
1	I	2.54	I	9	23-31	3740	7
2	II	2.54	I	3	32-34	3776	8
3	III	2.54	I	3	35-37*	3776	8
4	III	1.52	I	3	39-41	3791	9
5	II	1.52	I	3	42-44	3791	9
6	I	1.52	I	3	45-47	3791	9
7	I	1.52	II	3	48-50	3792	10
8	II	1.52	II	3	51-53	3792	10
9	III	1.52	II	3	54-56*	3792	10
10	III	2.54	II	3	58-60	3793	11
11	II	2.54	II	3	61-63	3793	11
12	I	2.54	II	3	64-66	3793	11

*Runs 38 and 57 were deleted.

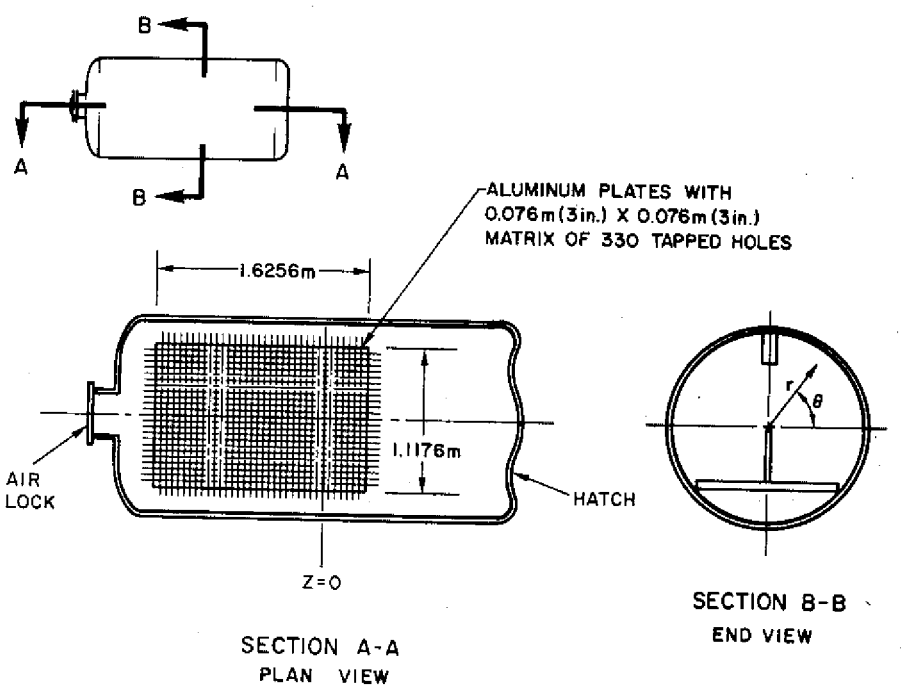

Fig. 2 — Plan and end views of Tank 2 showing cylindrical coordinates and matrix of 330 tapped holes

DESCRIPTION OF ANALYSIS

The pressurant gas may be air or nitrogen, but it is assumed to have the same specific heat ratio γ, one that remains constant over the temperature range of interest. The chamber volume is V and initial absolute temperature and pressure are T_0 and P_0, respectively. The subscript zero denotes initial condition. The total chamber molar contents N and pressure P are considered to be known functions of time t, as is the total temperature T_s of the influent pressurant. The pressurant flow rate dN/dt is suddenly increased from zero at time $t = 0$ and suddenly dropped to zero at time $t = t_c$, where t_c is time of valve closure. During the filling interval $0 \leqslant t \leqslant t_c$, dN/dt may be constant or may vary gradually. The chamber walls and any interior structure are considered isothermal at temperature T_0. At a set of n interior locations (index i), temperature histories $T_i(t)$ are measured. The objective is to infer the pressurant mole fraction history $X_i(t)$ corresponding to each $T_i(t)$.

This problem is not strictly determinant for two reasons. First, good experimental evidence indicates that the chamber contents are far from adiabatic. Gas-to-wall heat transfer from gas arriving at each interior point of interest undoubtedly varies from point to point. However, quantification of such spatial variation of heat-transfer effects on measured temperatures is a complex problem comparable to that of determining transient pressurant distribution, the solution of which was our original purpose. Thus, we make the modeling assumption that the molar gas-to-wall heat-transfer coefficient is independent of interior position; the validity of this assumption depends on the extent to which spatial variability averages out along fluid particle trajectories.

The second reason for indeterminacy is that after the pressurant enters the chamber its temperature T_p depends on age. "Old" pressurant is compressed in the chamber through a higher pressure ratio than "new" pressurant which is added later, hence old pressurant tends toward a higher temperature relative to its value at entrance. Here we make a second modeling assumption, that the pressurant age distribution is the same at every interior point.

Except for small volumes, at most a few diameters down-jet from each inlet nozzle, kinetic energy of the fluid is thermodynamically negligible and no distinction need be made between total and static temperatures within the chamber. Therefore, from the ideal gas law,

$$V = \int_{tc} RTP^{-1} dN = RP^{-1} \int_{tc} T \, dN = NR\bar{T}P^{-1}, \tag{1}$$

where tc denotes that the integration is over the total chamber contents, R is the universal gas constant, and $\bar{T}$ is the molar mean temperature. The chamber content total internal energy U may be written

$$U = N\bar{u} = \int_{tc} u \, dN = N[u_0 + c_v(\bar{T} - T_0)] = N[u_0 + \frac{R}{\gamma - 1}(\bar{T} - T_0)], \tag{2}$$

where again tc denotes that the integration is over the total chamber contents; u and $\bar{u}$, respectively, are local and mean specific internal energy; c_v is molar constant volume specific heat; and u_0 corresponds to T_0. This thermodynamic description, which is not in question, and the two modeling assumptions render our problem fully determinate.

To describe gas-to-wall heat transfer, we characterize the molar heat-transfer coefficient by a dimensionless parameter β, such that the local heat flow per mole, from gas at local temperature T to the chamber wall at temperature T_0, is $(\beta R/\theta)\ T - (T_0)$. Here θ is a characteristic time. Since turbulent convective heat transfer is nearly proportional to flow velocity, which in turn is roughly proportional to $d\ln N/dt$ during filling, we take $\theta = (d\ln N/dt)^{-1}$ for the filling interval $0 \leqslant t \leqslant t_c$. During this interval β should be nearly constant. After filling we take θ as constant at its value just prior to the time $t = t_c$. For post-filling times, $t > t_c$, β should decline to a much lower free-convection driven value as filling turbulence decays. The heat-removal rate $\dot{Q}$ from total chamber contents may be written

$$\dot{Q} = \beta R\theta^{-1} \int_{tc} (T - T_0) dN = \beta NR\theta^{-1}(\bar{T} - T_0). \tag{3}$$

The temperature linearity exhibited by Eqs. (1) to (3) signifies that the temperature T_i at a point can be calculated as if resident air and pressurant were perfectly stratified and suddenly mixed adiabatically at constant pressure to pressurant fraction X_i. Further, our assumption of uniform pressurant age distribution means that the pressurant temperature for this calculation is the average temperature $\bar{T}_p$ for all the pressurant in the chamber. Thus, if the mean resident air temperature $\bar{T}_a$ is known in addition to the molar mean temperature $\bar{T}$ of chamber contents from Eq. (1), an internal energy summation determines $\bar{T}_p$, i. e.,

$$N\bar{T} = (N - N_0)\bar{T}_p + N_0\bar{T}_a, \tag{4}$$

then

$$T_i = X_i\bar{T}_p + (1 - X_i)\bar{T}_a. \tag{5}$$

We have, finally, the pressurant mole fraction at any point,

$$X_i = \frac{\bar{T}_a - T_i}{\bar{T}_a - \bar{T}_p} = \left(1 - \frac{N_0}{N}\right)\left(\frac{\bar{T}_a - \bar{T}_i}{\bar{T}_a - \bar{T}}\right) = \bar{X}\left(\frac{\bar{T}_a - \bar{T}_i}{\bar{T}_a - \bar{T}}\right), \tag{6}$$

where $\bar{X}$ is the molar average pressurant fraction for the entire chamber contents.

To derive $\bar{T}_a$, the first step is to determine β from experimental data. A control volume energy balance gives

$$h_s\, dN/dt = (u_s + RT_s)\, dN/dt = dU/dt + \dot{Q}, \tag{7}$$

where h_s is the pressurant specific enthalpy corresponding to its supply temperature T_s. Combined with Eqs. (1) to (3) and the previously assigned value for θ, Eq. (7) yields for the filling interval

$$\beta = \frac{\gamma T_s - \bar{T} - d\bar{T}/d\ln N}{(\gamma - 1)(\bar{T} - T_0)} \qquad (0 \leqslant t \leqslant t_c) \tag{8}$$

and for the post-filling interval

$$\beta = -\frac{d\ln(\bar{T} - T_0)/dt}{(\gamma - 1)/\theta_c} \qquad (t > t_c), \tag{9}$$

where subscript c denotes that θ is evaluated just prior to time $t = t_c$.

And finally, with the resident gas and pressurant modeled as perfectly stratified, an energy balance on the resident gas is written as a system,

$$\frac{d(N_0\bar{u}_a)}{dt} + \frac{d(N_0R\bar{T}_a/P)}{dt}P + \frac{\beta RN_0}{\theta}(\bar{T}_a - T_0) = 0. \tag{10}$$

By combining Eqs. (8) and (10), noting that $\theta d\ln N/dt = 1$ and that $d\ln P = d\ln N + d\ln T$, one obtains

$$d\bar{T}_a = \frac{\gamma - 1}{\gamma}\bar{T}_a(d\ln P) - \mu[(T_s - \bar{T}/\gamma)d\ln P - \bar{T}_s d\ln\bar{T}], \tag{11}$$

where $\mu = (\bar{T}_a - T_0)/(\bar{T} - T_0)$.

An examination of the initial behavior of Eq. (11), i.e., with $\bar{T}_a = T_0$, $\bar{T} = T_0$, $T_s = T_{s_0}$, and $P = P_0$ at the time the control valve is opened ($t = 0$), shows that

$$\mu_0 = \frac{(\gamma - 1)T_0}{\gamma(T_0 - T_{s_0})(d\ln\bar{T}/d\ln P)_0 + \gamma T_{s_0} - T_0} \approx 1. \tag{12}$$

Then, with Eq. (12) as a starting value of μ, Eq. (11) is readily integrated numerically on the basis of measured $\bar{T}$ and P data. This procedure, valid for both the filling and post-filling processes, gives values of $\bar{T}_a$. Pressurant mole-fraction concentrations X_i at any local point of interest are obtained from Eq. (6). Comparison of X_i and $\bar{X}$ values at any time t indicates pressurant excess or deficiency.

From scale modeling considerations previously reported [12], an appropriate dimensionless time τ was described for both pressurization ($t < t_c$) and post-pressurization times ($t > t_c$). The definition was

$$\tau = \bar{X}/\bar{X}_c \quad (t < t_c) \tag{13a}$$

and

$$\tau = 1 - \frac{t - t_c}{\theta_c} \quad (t > t_c), \tag{13b}$$

where

$$\theta_c = -\left[\frac{d\ln(1 - \bar{X})}{dt}\right]_{t \to t_c > t}. \tag{13c}$$

In addition, a working hypothesis for scale modeling was stated. Irrespective of pressure level or pressurization rate, for a given enclosure geometry and nozzle configuration, at homologous model and prototype points, dimensionless pressurant deviation

$$\xi = (X - \bar{X})/\bar{X}_c \tag{14}$$

is a unique function of τ.

REDUCED DATA

Data of each experimental run were collected into tables in which temperatures and pressures were averaged at 1-s intervals, Tables 2A-43A (the A tables). The time $t = 0$ was arbitrarily taken at the instant the control valve began to open. Total time intervals over which each run was considered started at $t = -5$ s and continued long enough to include desired information. The captions give run number and nozzle configuration. In the upper-right-hand corner, a subtable gives the I locations of the 13 thermocouples and their cylindrical coordinates (r, θ, z). As shown in Fig. 2, $r = 0$ is along the chamber axis, and the plane $z = 0$ is normal to the axis and passes through the center nozzle with the positive direction toward the air-lock end. The first four columns of these tables give, respectively, time t, absolute pressure of the pressure tank (Tank 1 in Fig. 1) in atmospheres, total temperature T_s of inflowing pressurant in K, and absolute pressure P of the chamber in atmospheres. The next 13 columns, i.e., columns 5 through 17, give absolute temperatures in K for the 13 thermocouple locations. Notice that (I), when it follows an I location, indicates an inlet-jet centerline.

In the facing B tables (Tables 2B through 43B), we present the inferred values of pressurant mole fraction concentration X_I; columns 8 through 20 give values for I locations 1 through 13, respectively. These I locations correspond to the thermocouple locations in the A tables. The first seven columns give the time t, the molar mean temperature $\bar{T}$ in °C, the mean resident air temperature $\bar{T}_p$ in °C, the dimensionless molar heat-transfer coefficient β, the ratio β/θ, where θ is the defined characteristic time, and the mean pressurant mole fraction $\bar{X}$. Notice that Tables 2A and 2B give data for a single experimental run and are on facing pages, as are all the A and B Tables.

Next, consider the sets of replicate runs as given in Table 1. Set 1 has nine such runs, while the remaining eleven sets have three each. Our purpose is to organize our data by set into a convenient form for comparison with other data according to our working hypothesis and to examine standard deviations within our data sets.

For example, Set 1, Table C gives mean values for the nine replicate runs 23 through 31 presented in Tables 2A and 2B through 10A and 10B. The headings for this table are the same as those for the B tables. In addition, these mean values are at dimensionless times τ taken arbitrarily at 0.05 intervals over the range 0.00 to 2.45, as interpolated from τ values calculated by Eq. (13) and appropriate B tables. Set 1, Table D gives standard deviations of the mean local pressurant fractions, and Set 1, Table E gives the dimensionless pressurant deviations ξ for values of dimensionless time τ.

Similar Tables C, D, and E follow for each of the remaining 11 sets. The zeros in these tables at higher τ values are due to limiting the number of data scans processed by the computer. Thus, for the slower pressurant dumps, the calculation is turned off before $\tau = 2.45$.

DISCUSSION

We present results from 12 sets of replicated sequences that include 41 experimental runs with minimal clutter in the NRL 5-m^3 chamber. Pressurant concentration deviations (from perfectly mixed mean values) for a range of dimensionless times are inferred from measured local temperature histories. We call this the *thermal method* and describe its thermodynamic analysis.

Standard deviations of local pressurant fractions show that the means of these values are statistically meaningful at dimensionless times τ above 0.5 or 0.6, but below these values they are meaningless. We explain this condition as follows. First, the control valve is not instantaneous, but opens in about 2 s. Second, stagnant chamber gases require sufficient momentum transport to drive the turbulent, quasi-steady flow that the analysis assumes, and this process needs an interval of time to develop after the valve opens.

We see evidence of this flow regime through its effect on values of the dimensionless volumetric heat-transfer coefficient β in the C tables. As dimensionless time passes, β values tend to constancy. After the control valve is closed and momentum forces are overcome by viscous ones, turbulence decays. As a result, β values decrease to much lower values and data scatter increases.

Improved flow measurement, pressure-tank pressure regulation, increased number of local measurement points, and increased rates of data collection would improve data precision. Nevertheless, the E tables show that dimensionless pressurant deviations ξ sensitively indicate gas-mixing rates. Positive values of ξ signal a pressurant excess, negative values signal a deficiency, and values near zero signal thorough mixing. The data show thorough mixing by dimensionless time $\tau = 1.5$.

Except for strong positive peaks under the inlet nozzles, data taken at stations along the chamber center line show a pressurant defect which declines as the end of the chamber is reached. There is no significant difference in this pattern for one-, two-, or three-nozzle cases. However, when observation stations are located along the vessel radii, 0.6 of the distance to the wall and in a plane rotated 45° to the horizontal, this is not true. At these locations, the single center nozzle configuration shows a pressurant deficiency in the center section that changes to an excess toward the chamber end. The two- and three-nozzle configurations show an opposite effect. Although not large, these concentration differences are statistically significant. By dimensionless time $\tau = 1.5$, the data show thorough mixing. No significant effect of nozzle diameter, and hence filling rate (varied by a factor of 3.5), is seen. To exercise our model more severely, injection times can be extended and spaces made more cluttered.

Table 2A — Scaling Run 23, Test Configuration 1: One 2.54-cm Nozzle
[(J) indicates thermocouple on an inlet jet centerline]

t (s)	Press Tank P (atm)	T_t (K)	Chamber P (atm)	Chamber Absolute Temperatures (K) at Locations I 1	2	3(J)	4	5	6	7	8	9	10	11	12	13
-5	***	***	1.025	299.2	299.2	299.2	299.2	299.2	299.2	298.5	297.0	296.7	298.4	298.3	298.2	298.2
-4	***	***	1.025	299.2	299.2	299.2	299.2	299.2	299.2	298.6	296.9	296.8	298.2	298.2	298.3	298.2
-3	***	***	1.026	299.2	299.2	299.2	299.2	299.2	299.2	298.5	297.0	296.7	298.2	298.3	298.2	298.2
-2	***	***	1.025	299.2	299.2	299.2	299.2	299.2	299.2	298.5	296.9	296.7	298.5	298.2	298.1	298.2
-1	***	***	1.025	299.2	299.2	299.2	299.2	299.2	299.2	298.5	297.0	296.8	298.3	298.4	298.2	298.2
0	6.477	299.2	1.026	299.2	299.2	299.2	299.2	299.2	299.2	298.3	297.1	296.7	298.2	298.4	298.1	298.1
1	6.404	309.2	1.056	300.7	300.2	301.7	299.7	300.2	300.2	299.5	298.8	298.1	299.8	299.5	299.2	299.0
2	6.071	287.2	1.165	306.2	307.2	297.2	304.2	304.2	304.2	303.3	303.0	301.4	303.8	303.8	302.8	303.0
3	5.772	286.2	1.269	309.2	305.2	299.2	307.2	307.2	306.2	306.5	305.5	304.5	306.4	306.3	305.8	305.9
4	5.515	284.7	1.362	311.2	307.7	302.7	310.2	309.7	309.7	308.0	307.4	306.6	308.6	308.3	307.8	308.1
5	5.224	283.2	1.451	313.2	309.2	304.2	311.2	311.2	311.2	310.0	308.7	307.8	309.8	309.6	309.1	309.2
6	4.969	282.7	1.534	313.2	309.7	304.7	312.7	312.7	312.2	310.8	309.4	308.5	310.2	310.4	310.0	309.7
7	4.777	281.2	1.612	313.2	309.2	304.2	313.2	313.2	312.2	311.4	309.6	309.1	310.8	310.5	310.3	310.3
8	4.517	280.7	1.687	314.2	310.2	305.2	313.2	313.2	313.2	311.5	310.2	309.3	310.9	311.0	310.7	310.4
9	4.318	279.2	1.757	313.2	309.2	305.2	313.2	313.2	313.2	311.9	309.9	309.7	311.2	311.1	310.9	310.9
10	4.178	279.2	1.826	313.2	310.2	305.2	313.2	313.2	313.2	311.9	310.3	309.7	311.0	311.2	310.8	311.0
11	3.943	279.2	1.889	313.2	309.2	305.2	312.7	313.2	313.2	311.8	310.0	309.7	311.1	311.0	310.9	310.9
12	3.829	279.2	1.952	313.2	310.2	304.2	312.2	313.2	313.2	311.6	310.2	309.5	310.9	311.5	310.9	310.2
13	3.628	278.2	2.011	313.2	309.2	305.2	312.2	313.2	313.2	311.6	309.9	309.5	311.0	310.7	310.7	310.8
14	3.521	278.2	2.067	312.2	309.2	304.2	312.2	313.2	313.2	311.3	309.8	309.2	310.6	310.9	310.4	310.3
15	3.466	275.2	2.073	312.2	310.2	306.2	312.2	312.2	312.2	311.1	309.3	308.9	310.4	310.4	310.2	310.2
16	3.532	277.7	2.067	311.7	310.2	307.7	311.7	311.7	311.7	310.5	308.9	308.4	310.0	310.2	309.8	309.9
17	***	***	2.065	311.2	310.2	308.2	311.2	311.2	311.2	310.2	308.5	308.4	309.5	309.9	309.7	309.6
18	***	***	2.061	311.2	310.2	309.2	310.2	310.7	310.7	309.7	308.2	307.8	309.3	309.5	309.3	309.4
19	***	***	2.060	310.2	309.2	308.2	310.2	310.2	310.2	309.5	308.0	307.7	308.8	309.3	309.1	309.1
20	***	***	2.057	310.2	309.2	308.2	310.2	310.2	310.2	309.1	307.9	307.0	308.6	309.1	308.7	308.8
21	***	***	2.056	310.2	309.2	308.2	310.2	310.2	310.2	309.2	307.3	306.8	308.3	308.7	308.6	308.8
22	***	***	2.054	310.2	309.2	308.2	310.2	309.2	310.2	308.7	307.1	306.4	307.6	308.6	308.0	308.3
23	***	***	2.052	309.2	309.2	308.2	309.2	309.2	309.7	308.5	306.8	306.0	307.5	308.0	307.8	308.2
24	***	***	2.052	309.2	309.2	308.2	309.2	309.2	309.2	308.2	306.5	306.0	307.0	308.0	307.6	307.9
29	***	***	2.046	308.2	308.2	307.2	308.2	308.2	308.2	306.8	305.4	304.5	305.9	307.0	306.4	306.8
34	***	***	2.042	307.2	307.2	306.2	307.2	306.2	307.2	305.6	304.5	304.0	305.1	306.4	305.9	306.0
39	***	***	2.039	306.2	306.2	306.2	306.2	306.2	306.2	305.1	303.7	303.3	304.3	305.2	305.0	305.1
44	***	***	2.036	305.2	306.2	306.2	305.2	305.2	305.2	304.7	303.5	302.7	303.8	304.9	304.2	304.4
49	***	***	2.032	305.2	305.2	305.2	305.2	305.2	305.2	304.5	303.1	302.0	303.6	304.4	303.6	303.9
54	***	***	2.030	305.2	305.2	305.2	305.2	305.2	305.2	303.8	302.7	301.8	303.2	304.1	303.5	303.5
59	***	***	2.028	304.2	305.2	305.2	304.2	304.2	304.2	303.6	302.1	301.3	303.1	303.5	303.3	303.4
64	***	***	2.026	304.2	305.2	304.2	304.2	304.2	304.2	303.3	302.0	301.2	302.8	303.5	303.1	303.1
69	***	***	2.024	304.2	304.2	304.2	304.2	303.2	304.2	303.1	301.7	301.1	302.5	303.3	302.7	302.9
74	***	***	2.022	304.2	304.2	304.2	304.2	303.2	303.2	303.0	301.4	300.9	302.4	302.9	302.4	302.5
84	***	***	2.018	303.2	304.2	304.2	303.2	303.2	303.2	302.4	300.8	300.6	302.1	302.3	302.1	302.3
94	***	***	2.016	303.2	303.2	303.2	303.2	303.2	303.2	302.1	300.6	300.2	301.5	301.8	301.7	302.0
104	***	***	2.014	303.2	303.2	303.2	303.2	302.2	303.2	301.6	300.4	299.7	301.2	301.7	301.3	301.3
114	***	***	2.011	302.2	303.2	303.2	303.2	302.2	302.2	301.5	300.1	299.7	301.1	301.4	301.1	301.2
124	***	***	2.009	302.2	303.2	303.2	303.2	302.2	302.2	301.3	300.0	299.6	301.0	301.1	301.0	301.0
134	***	***	2.007	302.2	303.2	303.2	303.2	302.2	302.2	301.0	299.8	299.4	300.9	301.0	300.9	301.0
144	***	***	2.005	302.2	303.2	303.2	302.2	302.2	302.2	300.8	299.8	299.1	300.8	300.9	300.6	300.7
154	***	***	2.004	302.2	303.2	303.2	302.2	302.2	302.2	300.9	299.6	299.4	300.5	300.8	300.7	300.7
164	***	***	2.002	302.2	303.2	303.2	302.2	302.2	302.2	300.8	299.5	299.0	300.6	300.6	300.4	300.5
174	***	***	2.001	302.2	303.2	303.2	302.2	302.2	301.2	300.8	299.4	299.2	300.5	300.5	300.5	300.5

COORDINATES

I	R (M)	THETA (DEG)	Z (M)
1	0.0	***	-0.152
2	0.0	***	-0.076
3	0.0	***	0.0
4	0.0	***	0.076
5	0.0	***	0.152
6	0.0	***	0.229
7	0.0	***	0.530
8	0.0	***	0.610
9	0.0	***	0.686
10	0.0	***	0.762
11	0.0	***	0.838
12	0.0	***	0.914
13	0.0	***	0.991

Table 2B — Inferred Pressurant Distribution, Scaling Run 23, Test Configuration 1: One 2.54-cm Nozzle [(J) indicates thermocouple on an inlet jet centerline]

t (s)	$\bar{T}$ (°C)	$\bar{T}_s$ (°C)	$\bar{T}_p$ (°C)	β	β/θ	$\bar{X}$	Pressurant Fractions (X) at Locations I: 1	2	3(J)	4	5	6	7	8	9	10	11	12	13
COMMENCE VALVE OPENING																			
0.0	25.3	25.3	87.7	2.2	0.0000	0.000	0.000	0.000	0.000	0.000	0.000	0.000	0.000	0.000	0.000	0.000	0.000	0.000	
1.0	26.5	26.4	31.0	296.0	7.2734	.024	.075	-.035	.293	-.144	-.035	-.035	.009	.118	.053	.097	-.013	-.013	-.056
VALVE FULLY OPEN																			
2.0	29.9	30.0	28.8	65.6	5.7105	.106	-1.800	.613	5.438	-.191	-.191	-.191	-.191	-.915	.050	-.674	-.513	.050	-.111
3.0	32.6	33.7	27.1	26.0	1.9920	.172	-.233	.368	1.269	.068	.068	.218	.038	.008	.098	.038	.083	.113	.098
4.0	35.0	37.1	27.7	15.8	.9896	.222	-.019	.355	.890	.088	.142	.142	.142	.163	.206	.152	.206	.227	.195
5.0	36.4	39.3	28.3	15.7	.9274	.267	.002	.367	.822	.185	.185	.185	.212	.221	.267	.221	.258	.276	.267
6.0	37.1	40.8	28.8	15.7	.8342	.305	.124	.418	.838	.166	.166	.208	.250	.267	.309	.292	.292	.301	.326
7.0	37.4	41.5	29.2	16.6	.8117	.338	.182	.507	.912	.182	.182	.264	.253	.304	.312	.296	.337	.328	.329
8.0	37.8	42.5	29.7	14.6	.6433	.366	.176	.486	.874	.253	.253	.233	.315	.323	.362	.354	.382	.362	.385
9.0	37.8	42.9	29.9	16.3	.6641	.392	.278	.585	.891	.278	.278	.278	.308	.370	.354	.354	.377	.370	.370
10.0	37.9	43.4	30.1	15.4	.5869	.414	.310	.536	.914	.310	.310	.310	.340	.370	.385	.400	.400	.408	.393
11.0	37.7	43.4	30.3	16.8	.5787	.434	.317	.621	.926	.355	.317	.317	.355	.401	.393	.401	.424	.408	.408
12.0	37.6	43.5	30.5	16.6	.5496	.453	.328	.558	1.019	.405	.328	.328	.382	.397	.420	.428	.397	.420	.474
COMMENCE VALVE CLOSURE																			
13.0	37.6	43.7	30.7	16.4	.4899	.469	.340	.649	.957	.417	.340	.340	.394	.433	.433	.433	.471	.448	.440
14.0	37.3	43.5	30.8	20.8	.5172	.484	.408	.645	1.039	.408	.330	.330	.408	.432	.448	.456	.448	.464	.471
VALVE FULLY CLOSED																			
15.0	37.2	43.4	30.7	2.7	.0664	.485	.404	.562	.878	.404	.404	.404	.419	.467	.467	.467	.483	.475	.475
16.0	36.3	42.1	30.2	7.8	.1950	.485	.420	.545	.754	.420	.420	.420	.445	.478	.487	.478	.478	.487	.478
17.0	36.0	41.7	30.0	2.8	.0686	.485	.439	.524	.695	.439	.439	.439	.447	.490	.464	.498	.481	.473	.481
18.0	35.4	40.9	29.7	5.7	.1430	.485	.405	.494	.672	.494	.450	.450	.459	.485	.485	.485	.485	.476	.467
19.0	35.3	40.7	29.6	1.5	.0371	.485	.462	.552	.642	.462	.462	.462	.444	.471	.462	.498	.471	.462	.462
20.0	34.8	40.1	29.3	4.6	.1146	.485	.444	.537	.630	.444	.444	.444	.463	.463	.510	.500	.472	.482	.472
21.0	34.7	39.9	29.2	1.6	.0394	.485	.433	.527	.621	.433	.433	.433	.443	.508	.518	.518	.499	.480	.461
22.0	34.4	39.4	29.0	3.2	.0808	.485	.402	.499	.595	.402	.499	.402	.460	.499	.527	.556	.479	.508	.479
23.0	34.1	39.0	28.9	3.4	.0835	.485	.465	.465	.564	.465	.465	.416	.446	.495	.535	.535	.505	.495	.436
24.0	34.1	39.0	28.9	0.0	0.0000	.485	.450	.450	.548	.450	.450	.450	.459	.509	.519	.568	.489	.499	.469
25.0	33.8	38.6	28.7	3.5	.0863	.485	.421	.523	.523	.421	.472	.421	.472	.482	.543	.563	.462	.523	.482
26.0	33.6	38.4	28.6	1.8	.0443	.485	.490	.490	.490	.490	.490	.388	.459	.500	.531	.551	.480	.500	.449
27.0	33.6	38.4	28.6	0.0	0.0000	.485	.460	.460	.562	.460	.460	.460	.460	.501	.511	.562	.470	.480	.460
28.0	33.3	38.0	28.5	3.7	.0910	.485	.446	.446	.552	.446	.446	.446	.488	.488	.541	.573	.457	.499	.478
29.0	33.2	37.7	28.4	1.9	.0468	.485	.435	.435	.542	.435	.435	.435	.488	.510	.563	.574	.478	.510	.467
30.0	33.0	37.5	28.3	1.9	.0477	.485	.457	.457	.511	.457	.511	.403	.479	.511	.565	.554	.479	.479	.446
31.0	33.0	37.5	28.3	0.0	0.0000	.485	.483	.483	.483	.483	.483	.483	.472	.504	.537	.537	.472	.461	.429
32.0	32.9	37.3	28.2	2.0	.0486	.485	.473	.473	.473	.473	.473	.473	.506	.517	.528	.550	.462	.462	.441
33.0	32.9	37.3	28.2	0.0	0.0000	.485	.456	.456	.511	.456	.511	.456	.511	.511	.521	.554	.434	.478	.456
34.0	32.6	36.9	28.0	4.0	.1002	.485	.439	.439	.552	.439	.552	.439	.518	.496	.518	.563	.439	.462	.451

Table 3A — Scaling Run 24, Test Configuration 1: One 2.54-cm Nozzle
[(J) indicates thermocouple on an inlet jet centerline]

t (s)	Press Tank P (atm)	T_t (K)	Chamber P (atm)	Chamber Absolute Temperatures (K) at Locations I: 1	2	3(J)	4	5	6	7	8	9	10	11	12	13
-5	***	***	1.043	300.2	299.2	299.2	299.2	299.2	299.2	298.6	296.9	296.7	298.1	298.4	298.1	298.1
-4	***	***	1.043	300.2	299.2	299.2	299.2	299.2	299.2	298.8	297.1	296.7	298.4	298.5	298.4	298.4
-3	***	***	1.040	300.2	299.2	299.2	299.2	299.2	299.2	299.0	297.0	296.8	298.4	298.4	298.4	298.5
-2	***	***	1.043	300.2	299.2	299.2	299.2	299.2	299.2	298.8	296.9	296.7	298.1	298.3	298.4	298.3
-1	***	***	1.044	300.2	299.2	299.2	299.2	299.2	299.2	298.5	296.8	296.6	298.4	298.4	298.2	298.3
0	6.556	299.2	1.042	300.2	299.2	299.2	299.2	299.2	299.2	298.6	297.0	296.5	298.2	298.2	298.0	298.2
1	6.473	299.2	1.055	300.2	300.2	299.2	299.2	299.2	300.2	298.8	298.5	297.7	299.3	299.1	298.6	298.4
2	6.192	292.7	1.172	305.2	302.7	299.2	303.7	304.2	303.7	303.0	302.2	301.0	303.0	303.0	302.3	302.6
3	5.839	286.2	1.278	310.2	306.2	300.2	308.2	309.2	308.2	306.4	305.2	304.2	306.4	306.0	305.4	305.9
4	5.592	285.2	1.374	311.2	308.2	303.2	310.2	310.2	310.2	309.0	307.2	306.1	308.5	308.4	307.6	308.0
5	5.294	283.7	1.461	312.7	309.2	304.2	311.7	311.7	311.2	310.0	308.7	308.1	309.4	309.6	309.2	309.1
6	5.068	283.2	1.545	314.2	309.2	305.2	313.2	313.2	312.2	311.1	309.5	308.3	310.5	310.2	309.6	310.2
7	4.836	281.7	1.623	314.2	310.2	305.2	313.2	313.2	313.2	311.6	309.5	309.1	311.1	310.2	310.4	310.7
8	4.622	281.2	1.699	314.2	309.2	305.2	313.2	313.2	313.2	312.0	310.0	309.6	311.2	311.1	310.8	310.8
9	4.406	280.2	1.770	314.2	309.2	305.2	313.2	313.2	313.2	312.1	310.2	309.5	311.3	311.4	310.8	311.1
10	4.212	279.7	1.838	313.7	309.2	305.2	313.2	314.2	313.2	312.1	310.3	309.6	311.4	311.3	311.0	311.0
11	4.012	279.2	1.903	313.2	309.2	305.2	313.2	314.2	313.2	312.3	310.2	310.1	311.3	311.0	311.0	311.0
12	3.976	279.2	1.946	313.2	309.7	305.2	313.2	313.2	313.2	312.0	310.0	309.5	311.0	311.1	310.7	311.2
13	3.740	278.2	2.028	313.2	308.2	305.2	313.2	313.2	313.2	311.7	309.8	309.1	310.6	311.3	310.4	310.6
14	3.653	274.2	2.049	313.2	309.2	304.2	312.2	313.2	313.2	311.5	309.4	309.1	310.3	310.3	310.4	310.2
15	3.667	275.2	2.042	312.2	310.2	307.7	312.2	312.2	312.2	311.1	309.2	308.5	310.1	310.2	309.8	310.0
16	***	***	2.039	311.2	310.2	308.2	312.2	312.2	312.2	310.8	308.8	308.3	309.8	310.3	310.0	309.8
17	***	***	2.036	311.2	310.2	309.2	311.2	311.2	311.2	310.3	308.5	308.2	309.7	309.5	309.5	309.6
18	***	***	2.034	311.2	310.2	309.2	311.2	311.2	311.2	310.1	308.3	307.6	308.8	309.5	309.0	309.5
19	***	***	2.031	310.2	310.2	308.7	310.2	310.2	310.7	309.8	308.0	307.5	309.1	309.5	309.0	309.3
20	***	***	2.030	310.2	309.2	308.2	310.2	310.2	310.2	309.8	307.7	307.3	308.5	308.9	308.8	308.9
21	***	***	2.029	310.2	309.2	308.2	310.2	310.2	310.2	309.3	307.2	307.0	307.9	308.7	308.5	308.7
22	***	***	2.027	310.2	309.2	308.2	310.2	310.2	310.2	309.0	307.0	306.4	308.0	308.6	308.1	308.5
23	***	***	2.027	309.2	309.2	308.2	309.2	309.2	310.2	308.9	306.9	306.2	307.6	308.1	308.0	308.3
28	***	***	2.021	308.2	308.2	307.2	308.2	308.2	308.2	307.5	305.8	305.0	306.2	307.3	306.6	306.7
33	***	***	2.018	308.2	307.2	307.2	307.2	307.2	308.2	306.6	304.6	304.4	305.3	306.3	305.9	306.0
38	***	***	2.014	307.2	307.2	307.2	307.2	307.2	307.2	306.0	304.3	303.3	304.8	305.6	305.0	305.5
43	***	***	2.010	306.2	307.2	306.2	306.2	306.2	306.2	305.3	303.8	302.7	304.1	304.9	304.4	305.0
48	***	***	2.005	306.2	306.2	306.2	306.2	305.2	306.2	304.8	303.0	302.3	303.5	304.5	304.0	304.1
53	***	***	2.005	305.2	306.2	305.2	305.2	305.2	305.2	304.3	302.6	301.3	302.9	303.7	303.2	303.8
58	***	***	2.003	305.2	305.2	305.2	305.2	304.2	305.2	303.8	302.3	301.2	302.6	303.3	302.7	303.2
63	***	***	2.001	305.2	305.2	305.2	305.2	304.2	305.2	303.3	301.8	301.1	302.5	303.2	302.7	303.0
68	***	***	2.000	304.7	305.2	305.2	304.7	304.2	304.2	303.1	301.6	300.9	302.4	303.1	302.5	302.6
73	***	***	1.997	304.2	305.2	305.2	304.2	304.2	304.2	303.0	301.4	300.7	302.3	302.8	302.4	302.5
83	***	***	1.995	304.2	304.2	304.2	304.2	303.2	303.2	302.6	300.9	300.4	301.6	302.1	302.0	302.2
93	***	***	1.992	303.2	304.2	304.2	303.2	303.2	303.2	302.2	300.6	300.1	301.3	302.0	301.7	301.7
103	***	***	1.989	303.2	303.2	303.2	303.2	303.2	303.2	302.1	300.2	300.0	301.2	301.3	301.4	301.6
113	***	***	1.987	303.2	303.2	303.2	303.2	303.2	303.2	301.8	300.1	299.7	301.0	301.3	301.1	301.3
123	***	***	1.985	303.2	303.2	303.2	303.2	302.2	302.2	301.5	299.9	299.5	300.9	301.0	301.0	301.0
133	***	***	1.983	302.2	303.2	303.2	303.2	302.2	302.2	301.3	299.7	299.4	300.8	300.9	300.9	301.0
143	***	***	1.981	302.2	303.2	303.2	303.2	302.2	302.2	301.3	299.7	299.2	300.5	300.9	300.8	300.6

COORDINATES

I	R (M)	THETA (DEG)	Z (M)
1	0.0	***	-0.152
2	0.0	***	-0.076
3	0.0	***	0.0
4	0.0	***	0.076
5	0.0	***	0.152
6	0.0	***	0.229
7	0.0	***	0.530
8	0.0	***	0.610
9	0.0	***	0.686
10	0.0	***	0.762
11	0.0	***	0.838
12	0.0	***	0.914
13	0.0	***	0.991

Table 3B — Inferred Pressurant Distribution, Scaling Run 24, Test Configuration 1: One 2.54-cm Nozzle [(J) indicates thermocouple on an inlet jet centerline]

							Pressurant Fractions (X) at Locations I												
t (s)	$\bar{T}$ (°C)	$\bar{T}_s$ (°C)	$\bar{T}_p$ (°C)	β	β/θ	$\bar{X}$	1	2	3(J)	4	5	6	7	8	9	10	11	12	13
COMMENCE VALVE OPENING																			
0.0	25.3	25.3	26.4	1.0	0.0000	0.000	0.000	0.000	0.000	0.000	0.000	0.000	0.000	0.000	0.000	0.000	0.000	0.000	
1.0	25.9	25.9	26.1	562.8	5.8912	.011	-3.478	2.570	-3.478	-3.478	-3.478	2.570	-2.269	5.594	3.174	3.174	1.965	-.454	-2.269
VALVE FULLY OPEN																			
2.0	29.6	29.8	27.5	77.0	7.1619	.098	-.231	.411	1.909	-.017	-.231	-.017	.026	-.316	-.017	-.188	-.188	.111	.026
3.0	33.0	34.1	27.5	23.2	1.7461	.164	-.193	.265	1.181	-.041	-.041	-.041	.143	.081	.173	.081	.143	.219	.158
3.0	33.0	34.1	27.5	23.2	1.7461	.164	-.193	.265	1.181	-.041	-.041	-.041	.143	.081	.173	.081	.143	.219	.158
4.0	35.1	37.1	27.8	17.4	1.1421	.217	.084	.299	.837	.084	.084	.084	.148	.170	.245	.159	.170	.245	.213
5.0	36.4	39.2	28.4	16.0	.9162	.260	.127	.358	.819	.127	.127	.173	.228	.201	.215	.247	.228	.256	.275
6.0	37.3	40.9	29.0	15.1	.8012	.299	.127	.463	.800	.127	.127	.211	.253	.253	.321	.270	.295	.337	.295
7.0	37.7	41.8	29.4	15.7	.7530	.331	.200	.441	.842	.200	.200	.200	.280	.320	.320	.288	.360	.336	.320
8.0	37.9	42.5	29.7	16.0	.7268	.361	.244	.557	.870	.244	.244	.244	.291	.322	.322	.322	.330	.346	.354
9.0	37.9	42.9	30.0	16.0	.6507	.387	.277	.585	.894	.277	.277	.277	.315	.338	.362	.346	.338	.377	.362
10.0	38.0	43.3	30.2	15.7	.5884	.409	.343	.610	.916	.305	.225	.305	.343	.359	.381	.366	.374	.389	.397
11.0	38.0	43.6	30.5	16.0	.5565	.429	.400	.628	.933	.324	.248	.324	.347	.385	.362	.392	.415	.408	.415
COMMENCE VALVE CLOSURE																			
12.0	37.8	43.6	30.5	17.2	.3920	.442	.401	.393	.938	.325	.325	.325	.371	.401	.409	.417	.409	.432	.401
13.0	37.5	43.5	30.7	69.5	.7317	.465	.403	.715	.949	.325	.325	.325	.395	.418	.442	.450	.395	.457	.450
VALVE FULLY CLOSED																			
14.0	37.3	43.3	30.6	21.6	.2277	.471	.388	.625	1.019	.388	.305	.305	.396	.435	.427	.459	.459	.443	.467
15.0	36.2	41.8	30.0	22.1	.2323	.471	.461	.546	.757	.377	.377	.377	.419	.445	.470	.470	.461	.487	.478
16.0	35.8	41.2	29.7	10.1	.1066	.471	.537	.537	.711	.363	.363	.363	.433	.468	.476	.485	.442	.459	.485
17.0	35.3	40.6	29.4	10.6	.1114	.471	.508	.508	.598	.419	.419	.419	.446	.464	.455	.464	.481	.472	.472
18.0	35.0	40.1	29.3	7.3	.0771	.471	.492	.492	.583	.400	.400	.400	.446	.464	.492	.528	.464	.501	.464
19.0	34.6	39.5	29.0	11.4	.1202	.471	.554	.459	.601	.459	.459	.411	.440	.459	.468	.468	.430	.468	.449
20.0	34.4	39.3	28.9	3.9	.0414	.471	.523	.523	.619	.427	.427	.427	.407	.456	.456	.494	.456	.456	.456
21.0	34.2	39.1	28.8	4.0	.0422	.471	.504	.504	.602	.407	.407	.407	.436	.485	.465	.533	.455	.465	.455
22.0	34.0	38.7	28.7	8.2	.0864	.471	.492	.492	.592	.392	.392	.392	.452	.492	.512	.512	.452	.492	.462
23.0	34.0	38.7	28.7	0.0	0.0000	.471	.556	.456	.556	.456	.456	.357	.427	.466	.496	.516	.466	.467	.447
24.0	33.7	38.2	28.5	8.5	.0895	.471	.542	.440	.542	.440	.440	.440	.429	.450	.491	.552	.440	.470	.450
25.0	33.4	37.8	28.3	8.8	.0929	.471	.521	.521	.521	.415	.415	.415	.457	.457	.510	.531	.436	.489	.436
26.0	33.2	37.6	28.2	4.5	.0478	.471	.502	.502	.502	.396	.502	.396	.438	.470	.492	.534	.460	.481	.449
27.0	33.5	38.0	28.4	-9.0	-.0946	.471	.564	.460	.460	.460	.460	.408	.439	.450	.491	.543	.439	.460	.491
28.0	33.0	37.4	28.2	13.6	.1433	.471	.540	.432	.540	.432	.432	.432	.443	.454	.486	.540	.421	.486	.486
29.0	32.9	37.2	28.1	4.7	.0497	.471	.529	.420	.529	.420	.420	.420	.431	.431	.496	.562	.464	.529	.475
30.0	32.7	37.0	28.0	4.8	.0507	.471	.521	.409	.521	.409	.409	.409	.443	.487	.521	.554	.487	.499	.454
31.0	32.6	36.8	27.9	4.9	.0517	.471	.509	.395	.509	.395	.395	.395	.429	.509	.509	.542	.509	.531	.497
32.0	32.6	36.8	27.9	0.0	0.0000	.471	.498	.385	.498	.385	.498	.385	.464	.475	.509	.577	.487	.498	.464
33.0	32.6	36.8	27.9	0.0	0.0000	.471	.464	.464	.464	.464	.464	.351	.464	.509	.487	.566	.453	.487	.487
34.0	32.4	36.5	27.8	5.0	.0528	.471	.560	.445	.445	.445	.445	.387	.445	.502	.502	.525	.468	.491	.468

Table 4A — Scaling Run 25, Test Configuration 1: One 2.54-cm Nozzle
[(J) indicates thermocouple on an inlet jet centerline]

t (s)	Press Tank P (atm)	T_t (K)	Chamber P (atm)	Chamber Absolute Temperatures (K) at Locations I 1	2	3(J)	4	5	6	7	8	9	10	11	12	13
-5	***	***	1.044	300.2	300.2	300.2	300.2	300.2	300.2	298.4	297.2	296.7	298.2	298.4	298.1	298.1
-4	***	***	1.043	300.2	300.2	300.2	300.2	300.2	300.2	298.5	297.1	296.8	298.3	298.3	298.2	298.2
-3	***	***	1.044	300.2	300.2	300.2	300.2	300.2	300.2	298.4	297.3	296.7	298.1	298.4	298.1	298.1
-2	***	***	1.043	300.2	300.2	300.2	300.2	300.2	300.2	298.5	297.2	296.7	298.3	298.3	298.1	298.2
-1	***	***	1.042	300.2	300.2	300.2	300.2	300.2	300.2	298.6	296.9	296.8	298.3	298.1	298.1	298.2
0	6.528	300.2	1.048	300.2	300.2	300.2	300.2	300.2	300.2	298.5	297.8	297.4	298.7	298.6	298.4	298.3
1	6.202	300.2	1.168	305.2	303.2	300.7	303.2	303.7	303.7	302.8	302.5	301.4	303.4	303.2	302.5	302.7
2	5.868	287.2	1.274	310.2	306.2	300.2	308.2	308.2	307.2	306.4	305.4	304.1	306.6	306.1	305.5	305.5
3	5.581	286.2	1.370	312.2	308.2	303.2	310.2	310.2	309.2	308.5	307.4	306.4	308.6	308.5	307.8	308.0
4	5.300	285.2	1.459	313.2	309.2	304.7	311.7	311.7	311.2	310.2	308.7	308.1	309.8	309.4	309.2	309.2
5	5.060	284.2	1.543	314.2	310.2	305.2	313.2	313.2	312.2	311.1	309.7	308.8	310.5	310.4	309.9	310.2
6	4.884	283.2	1.623	314.2	310.7	305.7	313.7	313.7	313.2	311.5	310.0	309.2	311.0	310.8	310.3	310.7
7	4.599	282.2	1.696	314.2	310.2	306.2	314.2	314.2	313.2	312.0	310.3	309.7	311.4	311.1	310.9	311.0
8	4.462	281.2	1.768	314.2	310.2	306.2	314.2	314.2	313.2	312.0	310.6	309.7	311.3	311.5	311.0	311.0
9	4.216	280.7	1.836	314.2	310.2	306.2	314.2	314.2	314.2	312.2	310.5	310.0	311.4	311.3	311.1	311.1
10	4.077	280.2	1.900	314.2	310.2	306.2	313.2	314.2	313.2	312.0	310.6	309.8	311.5	311.5	310.9	311.0
11	3.854	280.2	1.963	314.2	310.2	306.2	313.2	314.2	313.7	312.1	310.3	309.8	311.4	311.1	311.1	311.1
12	3.787	280.2	2.023	314.2	310.2	305.2	312.2	314.2	313.2	311.8	310.2	309.8	311.1	311.3	310.9	310.9
13	3.588	279.2	2.065	314.2	309.2	306.2	313.2	313.2	313.2	311.7	309.9	309.6	311.0	310.9	310.8	310.7
14	3.636	274.2	2.067	312.7	310.2	307.2	312.7	312.7	312.7	311.0	309.7	309.1	310.7	310.7	310.2	310.3
15	***	***	2.063	312.2	310.2	309.2	312.2	312.2	312.2	311.0	309.4	309.0	310.0	310.2	310.0	310.0
16	***	***	2.059	311.7	310.7	309.7	312.2	312.2	312.2	310.5	309.1	308.4	309.7	309.8	309.5	309.5
17	***	***	2.057	311.2	310.2	309.2	311.2	311.2	312.2	310.4	308.8	308.3	309.1	309.6	309.4	309.4
18	***	***	2.054	311.2	310.2	309.2	311.2	311.2	311.2	310.0	308.5	307.7	308.9	309.3	308.8	309.1
19	***	***	2.053	311.2	310.2	309.2	311.2	310.7	311.2	309.7	308.3	307.5	308.5	309.2	308.7	308.8
20	***	***	2.051	310.2	310.2	309.2	310.2	310.2	310.2	309.3	307.8	307.1	308.4	308.8	308.3	308.7
21	***	***	2.050	310.2	310.2	309.2	310.2	310.2	310.2	309.0	307.6	306.8	307.8	308.7	308.2	308.2
22	***	***	2.048	310.2	310.2	309.2	310.2	310.2	310.2	308.7	307.4	306.2	307.7	308.4	307.6	308.1
27	***	***	2.043	309.2	309.2	308.2	309.2	308.2	309.2	307.8	306.1	305.6	306.7	307.2	306.8	307.1
32	***	***	2.038	308.2	308.2	308.2	308.2	308.2	308.2	306.8	305.5	304.5	305.9	306.5	305.9	306.3
37	***	***	2.035	307.2	307.2	307.2	307.2	307.2	307.2	305.9	304.7	304.1	304.9	306.1	305.5	305.5
42	***	***	2.032	306.2	307.2	306.2	306.2	306.2	306.2	305.2	304.0	303.5	304.3	305.4	304.9	305.0
47	***	***	2.028	306.2	306.2	306.2	306.2	306.2	306.2	304.5	303.6	302.7	303.9	304.9	304.2	304.5
52	***	***	2.027	306.2	306.2	306.2	306.2	305.2	305.2	304.4	303.0	302.5	303.5	304.2	304.0	304.2
57	***	***	2.023	305.2	305.2	305.2	305.2	305.2	305.2	304.0	303.0	302.3	303.2	304.0	303.3	303.7
62	***	***	2.022	305.2	305.2	305.2	305.2	305.2	305.2	303.9	302.5	302.2	303.1	303.6	303.2	303.3
67	***	***	2.020	305.2	305.2	305.2	305.2	305.2	305.2	303.7	302.5	301.8	302.8	303.3	302.8	303.0
72	***	***	2.017	304.2	305.2	305.2	305.2	304.2	304.2	303.4	302.3	301.4	302.6	303.1	302.8	303.0
82	***	***	2.014	304.2	304.2	304.2	304.2	304.2	304.2	302.8	301.5	300.9	302.2	302.5	302.2	302.4
92	***	***	2.011	304.2	304.2	304.2	304.2	303.2	303.2	302.4	301.0	300.5	301.7	302.2	301.9	302.0
102	***	***	2.009	303.2	304.2	304.2	303.2	303.2	303.2	301.8	300.8	300.1	301.6	302.0	301.5	301.6
112	***	***	2.007	303.2	304.2	304.2	303.2	303.2	303.2	301.8	300.6	300.2	301.0	301.6	301.3	301.3
122	***	***	2.005	303.2	304.2	304.2	303.2	303.2	303.2	301.3	300.4	299.7	301.0	301.4	300.9	301.0
132	***	***	2.002	303.2	304.2	304.2	303.2	302.2	302.2	301.2	300.1	299.5	301.0	301.1	300.9	301.0
142	***	***	2.000	302.2	303.2	303.2	303.2	302.2	302.2	301.1	299.9	299.6	300.9	301.0	300.9	300.8
152	***	***	1.999	302.2	303.2	303.2	303.2	302.2	302.2	301.0	299.8	299.4	300.9	300.8	300.7	300.7
162	***	***	1.997	302.2	303.2	303.2	303.2	302.2	302.2	300.9	299.5	299.5	300.7	300.5	300.7	300.7
172	***	***	1.994	302.2	303.2	303.2	303.2	302.2	302.2	300.6	299.5	299.3	300.7	300.4	300.4	300.6
182	***	***	1.993	302.2	303.2	303.2	303.2	302.2	302.2	300.5	299.4	299.2	300.6	300.3	300.3	300.5

COORDINATES

I	R (M)	THETA (DEG)	Z (M)
1	0.0	***	-0.152
2	0.0	***	-0.076
3	0.0	***	0.0
4	0.0	***	0.076
5	0.0	***	0.152
6	0.0	***	0.229
7	0.0	***	0.530
8	0.0	***	0.610
9	0.0	***	0.686
10	0.0	***	0.762
11	0.0	***	0.838
12	0.0	***	0.914
13	0.0	***	0.991

Table 4B — Inferred Pressurant Distribution, Scaling Run 25, Test Configuration 1: One 2.54-cm Nozzle [(J) indicates thermocouple on an inlet jet centerline]

t (s)	$\bar{T}$ (°C)	$\bar{T}_s$ (°C)	$\bar{T}_p$ (°C)	β	β/θ	$\bar{X}$	Pressurant Fractions (X) at Locations I: 1	2	3(J)	4	5	6	7	8	9	10	11	12	13
COMMENCE VALVE OPENING																			
0.0	25.9	25.9	60.0	6.0	0.0000	0.000	0.000	0.000	0.000	0.000	0.000	0.000	0.000	0.000	0.000	0.000	0.000	0.000	
1.0	29.7	29.8	29.1	105.3	10.0864	.091	-1.639	1.208	4.768	1.208	.497	.497	-.358	-1.354	-.215	-1.212	-1.070	-.358	-.785
VALVE FULLY OPEN																			
2.0	32.9	33.6	29.4	30.0	2.2870	.158	-.551	.392	1.807	-.079	-.079	.156	-.032	-.009	.227	-.056	.038	.133	.109
3.0	35.1	36.8	29.0	18.7	1.2243	.212	-.191	.366	1.012	.107	.107	.236	.120	.146	.236	.120	.120	.185	.146
4.0	36.5	39.0	29.4	17.1	.9971	.256	.002	.420	.891	.159	.159	.211	.149	.211	.243	.201	.232	.232	.222
5.0	37.5	40.6	29.9	15.9	.8422	.295	.064	.436	.902	.157	.157	.230	.204	.250	.306	.269	.269	.297	.269
6.0	37.9	41.7	30.2	16.4	.8020	.328	.152	.458	.896	.196	.196	.240	.248	.301	.345	.301	.310	.336	.292
7.0	38.2	42.5	30.6	16.0	.6872	.357	.213	.549	.885	.213	.213	.297	.263	.330	.355	.322	.339	.339	.322
8.0	38.3	42.9	30.8	16.6	.6861	.383	.246	.575	.904	.246	.246	.328	.295	.337	.386	.361	.337	.361	.353
9.0	38.4	42.4	31.0	15.9	.5931	.405	.281	.603	.926	.281	.281	.281	.313	.378	.394	.386	.386	.386	.378
10.0	38.2	43.5	31.1	17.4	.6070	.426	.286	.610	.933	.367	.286	.367	.335	.375	.416	.383	.375	.408	.392
COMMENCE VALVE CLOSURE																			
11.0	38.2	43.7	31.3	16.4	.5349	.444	.306	.628	.951	.387	.306	.346	.346	.419	.435	.411	.427	.411	.403
12.0	38.0	43.6	31.4	5.7	.5693	.461	.299	.627	1.038	.463	.299	.381	.364	.422	.430	.430	.406	.422	.414
VALVE FULLY CLOSED																			
13.0	37.9	43.6	31.5	3.7	.3737	.472	.299	.714	.963	.382	.382	.382	.374	.449	.449	.440	.440	.432	.432
14.0	38.2	44.0	31.7	-.6	-.0624	.472	.400	.604	.848	.400	.400	.400	.408	.441	.465	.441	.433	.457	.441
15.0	37.6	43.2	31.3	1.3	.1264	.472	.426	.595	.680	.426	.426	.426	.392	.451	.460	.485	.460	.460	.451
16.0	37.0	42.3	30.9	1.3	.1332	.472	.451	.538	.626	.407	.407	.407	.416	.459	.495	.495	.477	.486	.477
17.0	36.7	41.9	30.8	.7	.0693	.472	.461	.550	.640	.461	.461	.371	.389	.452	.470	.514	.461	.461	.452
18.0	36.2	41.3	30.5	1.1	.1078	.472	.434	.526	.619	.434	.434	.434	.397	.452	.499	.508	.462	.489	.452
19.0	36.1	41.1	30.4	.4	.0370	.472	.418	.512	.605	.418	.465	.418	.409	.456	.502	.530	.456	.484	.465
20.0	35.8	40.7	30.2	.8	.0756	.472	.470	.470	.566	.470	.470	.470	.403	.461	.499	.499	.451	.480	.432
21.0	35.6	40.5	30.1	.4	.0387	.472	.454	.454	.551	.454	.454	.454	.416	.464	.512	.541	.445	.474	.464
22.0	35.3	40.1	30.0	.8	.0793	.472	.437	.437	.536	.437	.437	.437	.427	.467	.556	.536	.457	.516	.457
23.0	35.3	40.1	30.0	0.0	0.0000	.472	.409	.508	.508	.459	.459	.409	.419	.498	.508	.547	.468	.488	.459
24.0	35.2	39.9	29.9	.4	.0406	.472	.381	.481	.481	.481	.481	.481	.421	.471	.511	.551	.441	.491	.471
25.0	34.7	39.3	29.6	1.3	.1258	.472	.464	.464	.464	.464	.464	.464	.422	.453	.546	.536	.432	.505	.464
26.0	34.5	39.0	29.5	.4	.0434	.472	.445	.445	.550	.445	.445	.445	.413	.455	.550	.539	.445	.508	.455
27.0	34.5	39.0	29.5	0.0	0.0000	.472	.429	.429	.534	.429	.534	.429	.408	.492	.513	.534	.471	.492	.450
28.0	34.5	39.0	29.5	0.0	0.0000	.472	.455	.455	.508	.455	.508	.403	.413	.487	.508	.550	.455	.487	.455
29.0	34.2	38.6	29.3	.9	.0891	.472	.479	.479	.479	.479	.479	.479	.414	.457	.511	.554	.414	.468	.447
30.0	34.1	38.4	29.3	.5	.0457	.472	.470	.470	.470	.470	.470	.470	.426	.448	.535	.546	.426	.492	.448
31.0	33.9	38.2	29.2	.5	.0467	.472	.464	.464	.464	.464	.464	.464	.420	.464	.552	.541	.453	.497	.431
32.0	33.8	38.0	29.1	.5	.0475	.472	.452	.452	.452	.452	.452	.452	.430	.475	.553	.542	.464	.509	.452
33.0	33.8	38.0	29.1	0.0	0.0000	.472	.484	.428	.484	.484	.484	.428	.417	.484	.529	.529	.462	.484	.440
34.0	33.6	37.8	29.0	.5	.0484	.472	.514	.401	.514	.514	.514	.401	.401	.480	.503	.548	.446	.457	.446

Table 5A — Scaling Run 26, Test Configuration 1: One 2.54-cm Nozzle
[(J) indicates thermocouple on an inlet jet centerline]

t (s)	Press Tank P (atm)	T_t (K)	Chamber P (atm)	Chamber Absolute Temperatures (K) at Locations I: 1	2	3(J)	4	5	6	7	8	9	10	11	12	13
-5	***	***	1.043	301.2	301.2	301.2	301.2	301.2	301.2	299.6	298.1	297.8	299.5	299.5	299.4	299.5
-4	***	***	1.043	301.2	301.2	301.2	301.2	301.2	301.2	299.6	298.1	297.6	299.5	299.5	299.3	299.5
-3	***	***	1.043	301.2	301.2	301.2	301.2	301.2	301.2	299.8	298.0	297.8	299.5	299.5	299.5	299.5
-2	***	***	1.044	301.2	301.2	301.2	301.2	301.2	301.2	299.5	298.3	297.7	299.4	299.0	299.5	299.3
-1	***	***	1.043	301.2	301.2	301.2	301.2	301.2	301.2	299.7	298.0	297.8	299.5	299.5	299.4	299.5
0	6.536	301.2	1.042	301.2	301.2	301.2	301.2	301.2	301.2	299.8	298.1	297.8	299.3	299.6	299.5	299.5
1	6.333	301.2	1.044	301.2	301.2	301.2	301.2	301.2	301.2	299.5	298.4	297.7	299.5	299.8	299.4	299.3
2	6.316	296.7	1.120	303.7	303.2	300.7	302.7	302.7	302.7	302.2	301.7	300.7	303.0	302.9	302.1	302.2
3	5.961	288.2	1.232	310.2	306.2	300.2	307.2	308.2	307.2	306.6	305.2	304.2	306.6	306.2	305.9	306.1
4	5.700	288.2	1.333	312.2	308.2	303.2	310.2	310.2	309.2	309.1	307.8	306.5	308.9	308.9	308.0	308.2
5	5.380	286.7	1.422	313.7	309.7	305.2	312.7	312.7	311.7	311.0	309.2	308.4	310.5	310.5	310.2	310.2
6	5.166	285.2	1.510	315.2	310.2	307.2	314.2	314.2	313.2	312.0	310.3	309.4	311.5	311.4	310.8	311.1
7	4.956	284.7	1.593	315.2	312.2	307.2	314.7	314.7	314.2	312.4	310.9	310.0	312.2	312.1	311.5	311.7
8	4.710	283.2	1.667	315.2	311.2	307.2	315.2	315.2	315.2	313.1	311.1	310.5	312.3	312.2	312.0	312.1
9	4.454	283.2	1.740	315.2	312.2	307.2	315.2	315.2	315.2	313.5	311.0	310.9	312.6	312.2	312.2	312.3
10	4.309	282.2	1.810	315.2	311.2	307.2	315.2	315.2	315.2	313.2	311.6	310.8	312.5	312.7	312.4	312.2
11	4.074	282.2	1.876	315.2	311.2	307.2	315.2	315.2	315.2	313.6	311.3	310.9	313.0	312.4	312.3	312.6
12	3.938	281.2	1.941	315.2	311.7	307.2	314.7	315.2	315.2	313.4	311.4	311.0	312.5	312.5	312.4	312.3
13	3.779	281.2	1.999	315.2	311.2	307.2	314.2	315.2	315.2	312.9	311.2	310.6	312.5	312.3	312.0	312.1
14	3.622	281.2	2.052	315.2	310.2	307.2	314.2	315.2	315.2	313.0	311.0	310.6	312.2	312.1	312.0	312.0
15	3.602	277.2	2.059	314.2	311.7	307.2	313.7	314.2	314.2	312.4	310.5	310.2	311.9	311.6	311.6	311.7
16	3.637	279.2	2.056	313.2	312.2	310.2	313.2	313.2	313.2	312.2	310.5	309.9	311.5	311.6	311.3	311.2
17	***	***	2.052	313.2	312.2	310.2	313.2	313.2	313.2	312.0	309.9	309.7	311.1	311.1	311.1	311.1
18	***	***	2.049	312.2	311.2	310.2	312.2	312.2	313.2	311.6	309.8	309.3	310.9	311.2	310.8	310.8
19	***	***	2.049	312.2	311.2	310.2	312.2	312.2	312.2	311.3	309.7	309.0	310.2	311.0	310.6	310.4
20	***	***	2.046	312.2	311.2	310.2	312.2	312.2	312.2	311.0	309.1	308.8	310.4	310.5	310.3	310.4
21	***	***	2.045	312.2	311.2	310.2	311.2	311.2	312.2	310.6	309.0	308.5	309.6	310.4	310.2	310.0
22	***	***	2.042	311.2	310.7	310.2	311.2	311.2	311.7	310.3	308.7	308.1	309.7	310.2	309.7	310.0
23	***	***	2.042	311.2	310.2	310.2	311.2	311.2	311.2	310.2	308.4	308.1	309.2	310.0	309.7	309.6
24	***	***	2.039	310.7	310.2	310.2	310.7	310.2	311.2	309.7	308.4	307.5	309.1	309.9	309.2	309.5
29	***	***	2.035	310.2	309.2	309.2	309.2	309.2	310.2	309.1	307.2	306.6	308.2	308.7	308.4	308.6
34	***	***	2.030	309.2	309.2	308.2	308.7	308.2	309.2	307.7	306.4	305.0	306.7	307.8	306.8	307.5
39	***	***	2.028	308.2	308.2	308.2	308.2	307.7	308.2	306.9	304.9	304.4	305.7	306.8	306.4	306.6
44	***	***	2.025	308.2	308.2	307.2	307.2	307.2	307.2	306.3	304.5	304.0	305.2	306.1	305.7	305.8
49	***	***	2.020	307.2	307.2	307.2	307.2	306.2	306.7	305.7	304.5	303.3	305.1	305.8	305.0	305.2
54	***	***	2.019	307.2	307.2	307.2	306.2	306.2	306.2	305.4	303.8	303.3	304.9	305.3	304.8	305.0
59	***	***	2.017	306.2	307.2	306.7	306.2	306.2	306.2	305.2	303.6	303.1	304.6	305.1	304.8	305.1
64	***	***	2.014	306.2	306.2	306.2	306.2	305.2	306.2	304.9	303.5	302.6	304.5	304.9	304.3	304.7
69	***	***	2.011	306.2	306.2	306.2	306.2	305.2	305.2	304.8	303.3	302.5	304.4	304.6	304.2	304.5
74	***	***	2.010	306.2	306.2	306.2	305.2	305.2	305.2	304.4	303.0	302.7	303.8	304.7	304.0	304.0
84	***	***	2.007	305.2	306.2	305.2	305.2	305.2	305.2	304.0	302.7	302.2	303.3	304.4	303.7	303.6
94	***	***	2.003	305.2	305.2	305.2	305.2	304.2	304.2	303.9	302.5	301.5	303.4	303.9	303.1	303.4
104	***	***	2.004	304.2	305.2	305.2	305.2	304.2	304.2	303.3	301.9	301.4	302.9	303.4	303.0	303.2
114	***	***	2.000	304.2	305.2	305.2	305.2	304.2	304.2	303.3	301.5	301.4	302.9	302.9	303.1	303.1
124	***	***	1.998	304.2	305.2	305.2	304.2	304.2	304.2	303.1	301.3	301.2	302.7	302.7	302.8	303.0
134	***	***	1.997	304.2	305.2	304.2	304.2	304.2	304.2	302.9	301.7	300.9	302.6	303.1	302.6	302.9
144	***	***	1.978	304.2	305.2	304.2	304.2	304.2	304.2	302.8	301.2	301.0	302.5	302.7	302.5	302.5
154	***	***	1.976	304.2	304.2	304.2	304.2	303.2	303.2	302.6	301.1	300.9	302.4	302.5	302.4	302.5
164	***	***	1.974	304.2	305.2	305.2	304.2	303.2	303.2	302.5	301.0	300.8	302.4	302.5	302.4	302.4
174	***	***	1.974	304.2	305.2	305.2	304.2	303.2	303.2	302.6	301.0	300.8	302.0	302.4	302.4	302.2

I	COORDINATES R (M)	THETA (DEG)	Z (M)
1	0.0	***	-0.152
2	0.0	***	-0.076
3	0.0	***	0.0
4	0.0	***	0.076
5	0.0	***	0.152
6	0.0	***	0.229
7	0.0	***	0.330
8	0.0	***	0.610
9	0.0	***	0.686
10	0.0	***	0.762
11	0.0	***	0.838
12	0.0	***	0.914
13	0.0	***	0.991

Table 5B — Inferred Pressurant Distribution, Scaling Run 26, Test Configuration 1: One 2.54-cm Nozzle [(J) indicates thermocouple on an inlet jet centerline]

t (s)	$\bar{T}$ (°C)	$\bar{T}_s$ (°C)	$\bar{T}_p$ (°C)	β	β/θ	$\bar{X}$	Pressurant Fractions (X) at Locations I: 1	2	3(J)	4	5	6	7	8	9	10	11	12	13
COMMENCE VALVE OPENING																			
0.0	26.9	26.9	194.0	.4	0.0000	0.000	0.000	0.000	0.000	0.000	0.000	0.000	0.000	0.000	0.000	0.000	0.000	0.000	
1.0	26.9	26.9	28.0	68.6	.1370	-.021	.000	.000	.000	.000	.000	.000	-.269	.269	-.090	-.090	.179	-.090	-.179
VALVE FULLY OPEN																			
2.0	29.1	29.2	28.4	179.6	11.2527	.063	-.245	.400	3.625	1.045	1.045	1.045	-.116	-1.664	-.761	-1.406	-1.277	-.374	-.503
3.0	33.0	33.7	28.3	35.5	2.9383	.137	-.406	.335	1.448	.150	-.035	.150	.002	-.054	.076	-.035	.039	.076	.039
4.0	35.3	36.9	28.7	21.8	1.5466	.196	-.118	.370	.981	.126	.126	.248	.089	.040	.163	.089	.089	.187	.163
5.0	37.2	39.6	29.7	15.9	.9309	.242	.026	.429	.883	.126	.126	.227	.157	.167	.217	.187	.187	.207	.207
6.0	38.4	41.5	30.4	15.7	.8866	.283	.059	.509	.779	.149	.149	.239	.221	.221	.275	.248	.257	.302	.275
7.0	39.0	42.8	31.0	15.8	.8114	.319	.163	.416	.838	.205	.205	.247	.281	.264	.315	.281	.290	.332	.315
8.0	39.3	43.6	31.3	16.1	.7173	.349	.220	.546	.873	.220	.220	.220	.277	.301	.326	.326	.334	.342	.334
9.0	39.5	44.2	31.7	15.9	.6717	.376	.264	.504	.903	.264	.264	.264	.288	.352	.336	.344	.376	.368	.360
10.0	39.5	44.5	31.9	16.6	.6567	.400	.287	.605	.924	.287	.287	.287	.335	.327	.367	.374	.359	.374	.390
11.0	39.5	44.8	32.2	16.0	.5718	.421	.313	.629	.946	.313	.313	.313	.329	.376	.384	.360	.408	.408	.384
12.0	39.5	45.0	32.4	16.5	.5632	.441	.328	.606	.963	.368	.328	.328	.360	.384	.392	.416	.416	.416	.424
COMMENCE VALVE CLOSURE																			
13.0	39.2	44.9	32.5	17.7	.5350	.457	.326	.647	.969	.406	.326	.326	.398	.398	.422	.414	.430	.446	.438
14.0	39.1	44.9	32.6	234.5	.4682	.472	.327	.734	.978	.408	.327	.327	.392	.416	.425	.449	.449	.449	.449
VALVE FULLY CLOSED																			
15.0	38.7	44.4	32.4	77.0	.1538	.474	.378	.586	.960	.420	.378	.378	.411	.428	.428	.436	.461	.453	.445
16.0	38.3	43.8	32.1	49.0	.0978	.474	.449	.535	.706	.449	.449	.449	.423	.415	.440	.458	.449	.466	.475
17.0	37.7	43.0	31.8	68.4	.1366	.474	.434	.523	.701	.434	.434	.434	.416	.451	.442	.478	.478	.469	.469
18.0	37.2	42.4	31.5	53.9	.1076	.474	.484	.576	.668	.484	.484	.392	.410	.420	.438	.456	.438	.456	.456
19.0	37.2	42.4	31.5	0.0	0.0000	.474	.462	.554	.646	.462	.462	.462	.416	.407	.444	.499	.425	.453	.471
20.0	36.8	41.8	31.2	56.3	.1125	.474	.449	.544	.639	.449	.449	.449	.430	.449	.449	.468	.459	.468	.459
21.0	36.6	41.5	31.1	19.3	.0386	.474	.418	.514	.610	.514	.514	.418	.437	.427	.447	.514	.437	.447	.466
22.0	36.2	40.9	30.9	59.9	.1197	.474	.487	.537	.586	.487	.487	.437	.437	.427	.457	.477	.437	.467	.437
23.0	36.2	40.9	30.9	0.0	0.0000	.474	.469	.568	.568	.469	.469	.469	.429	.439	.439	.508	.429	.449	.459
24.0	35.7	40.3	30.6	62.9	.1256	.474	.489	.541	.541	.489	.541	.438	.448	.407	.468	.489	.407	.468	.438
25.0	35.7	40.3	30.6	0.0	0.0000	.474	.506	.506	.609	.506	.506	.506	.414	.424	.434	.486	.414	.434	.414
26.0	35.5	40.1	30.5	21.7	.0433	.474	.494	.494	.598	.494	.494	.494	.452	.390	.452	.504	.390	.452	.452
27.0	35.2	39.7	30.3	44.6	.0890	.474	.481	.481	.588	.481	.481	.481	.448	.395	.491	.491	.406	.491	.448
28.0	35.2	39.7	30.3	0.0	0.0000	.474	.466	.373	.573	.466	.466	.466	.423	.423	.487	.476	.434	.476	.434
29.0	35.1	39.5	30.2	22.9	.0457	.474	.440	.548	.548	.548	.548	.440	.407	.429	.461	.483	.429	.451	.429
30.0	35.1	39.5	30.2	0.0	0.0000	.474	.431	.539	.539	.539	.539	.431	.431	.431	.452	.517	.409	.452	.452
31.0	34.9	39.3	30.2	23.3	.0465	.474	.512	.512	.512	.512	.512	.512	.435	.402	.457	.523	.390	.446	.446
32.0	34.6	38.8	30.0	48.9	.0938	.474	.484	.484	.596	.484	.484	.484	.427	.392	.484	.540	.393	.484	.438
33.0	34.5	38.6	29.9	24.7	.0493	.474	.455	.455	.569	.455	.569	.435	.443	.397	.512	.535	.397	.500	.420
34.0	34.3	38.4	29.8	25.2	.0503	.474	.434	.434	.550	.492	.550	.434	.445	.399	.527	.538	.410	.515	.434

Table 6A — Scaling Run 27, Test Configuration 1: One 2.54-cm Nozzle
[(J) indicates thermocouple on an inlet jet centerline]

t (s)	Press Tank P (atm)	T_t (K)	Chamber P (atm)	Chamber Absolute Temperatures (K) at Locations I: 1	2	3(J)	4	5	6	7	8	9	10	11	12	13
-5	***	***	1.043	301.2	301.2	301.2	301.2	301.2	301.2	300.0	298.7	297.8	299.7	300.1	299.6	299.7
-4	***	***	1.042	301.2	301.2	301.2	301.2	301.2	301.2	299.9	298.3	297.9	299.7	299.5	299.7	299.6
-3	***	***	1.044	301.2	301.2	301.2	301.2	301.2	301.2	299.6	298.7	298.0	299.7	300.2	299.5	299.5
-2	***	***	1.041	301.2	301.2	301.2	301.2	301.2	301.2	300.1	298.5	298.0	299.7	299.8	299.7	299.8
-1	***	***	1.043	301.2	301.2	301.2	301.2	301.2	301.2	300.0	298.7	298.0	299.6	300.0	299.5	299.5
0	6.539	301.2	1.047	301.2	301.2	301.2	301.2	301.2	301.2	300.2	299.2	298.6	300.3	300.3	300.0	300.0
1	6.221	303.2	1.130	305.2	303.2	302.2	303.2	304.2	304.2	303.1	303.1	301.6	303.8	303.9	303.0	302.9
2	5.937	288.7	1.241	310.2	307.2	301.2	308.2	308.2	308.2	307.3	306.2	304.9	307.1	307.0	306.4	306.6
3	5.701	287.2	1.341	313.2	310.2	304.2	311.2	311.2	311.2	309.7	308.5	307.4	309.8	309.5	308.8	309.4
4	5.377	285.7	1.430	314.7	310.7	306.2	313.7	313.7	312.7	311.3	309.8	308.7	311.1	310.9	310.4	310.6
5	5.103	285.2	1.516	315.2	311.2	307.2	314.2	314.2	314.2	312.3	311.0	309.9	311.7	312.0	311.3	311.3
6	4.906	284.2	1.596	315.2	311.2	307.2	315.2	315.2	314.2	313.3	311.5	310.5	312.6	312.4	311.9	312.3
7	4.638	283.2	1.671	315.7	311.7	307.2	315.2	315.2	314.7	313.8	311.7	311.1	312.8	312.6	312.5	312.6
8	4.484	282.2	1.745	315.2	312.2	307.2	315.2	315.2	315.2	313.4	311.9	311.0	312.7	312.8	312.3	312.5
9	4.196	281.7	1.837	315.2	311.2	307.2	315.2	315.2	315.2	313.7	311.7	311.1	312.8	312.7	312.5	312.6
10	4.026	281.2	1.901	315.2	311.2	307.2	315.2	315.2	315.2	313.4	312.0	311.3	313.2	313.1	312.6	312.4
11	3.826	281.2	1.963	315.2	311.2	307.2	315.2	315.2	315.2	313.8	311.7	311.3	313.0	312.8	312.5	312.7
12	3.736	281.2	2.023	315.2	310.7	307.2	315.2	315.2	315.2	313.3	311.8	311.1	312.4	312.8	312.3	312.1
13	3.594	280.2	2.056	315.2	310.2	307.2	314.2	315.2	315.2	313.4	311.4	310.9	312.5	312.4	312.3	312.4
14	3.653	276.2	2.052	314.2	311.2	309.7	314.2	314.2	314.2	312.8	311.3	310.6	312.3	312.4	312.0	311.9
15	***	***	2.048	313.2	311.2	310.2	313.2	313.2	313.2	312.5	310.9	310.4	311.8	312.0	311.8	311.8
16	***	***	2.045	313.2	311.2	310.2	313.2	313.2	313.2	312.2	310.2	309.9	311.6	311.6	311.3	311.5
17	***	***	2.043	313.2	311.2	310.2	312.7	312.7	313.2	311.5	310.2	309.5	310.9	311.6	311.0	310.9
18	***	***	2.040	312.2	311.2	310.2	312.2	312.2	312.2	311.6	309.7	309.4	310.9	311.0	310.9	311.0
19	***	***	2.039	312.2	311.2	310.2	312.2	312.2	312.2	311.1	309.7	309.0	310.4	311.0	310.5	310.6
20	***	***	2.037	312.2	311.2	310.2	312.2	312.2	312.2	310.9	309.2	308.8	310.2	310.4	310.3	310.5
21	***	***	2.036	312.2	311.2	310.2	311.2	311.2	312.2	310.5	309.3	308.5	309.6	310.4	310.0	310.0
22	***	***	2.033	311.2	310.2	310.2	311.2	311.2	311.2	310.2	309.1	308.0	309.6	310.2	309.5	309.8
27	***	***	2.029	310.2	310.2	309.2	310.2	309.2	310.2	309.2	308.0	306.8	308.3	309.4	308.7	308.8
32	***	***	2.024	309.2	309.2	308.2	309.2	308.2	309.2	308.4	306.8	305.8	307.5	308.1	307.6	308.2
37	***	***	2.020	308.2	308.2	308.2	308.2	307.2	308.2	306.9	305.9	304.5	306.0	307.7	306.9	307.2
42	***	***	2.019	307.2	307.2	307.2	307.2	307.2	307.2	305.9	304.5	303.5	305.1	305.9	305.8	306.6
47	***	***	2.018	306.2	307.2	307.2	307.2	306.2	306.2	305.5	303.9	303.2	304.4	305.2	305.3	305.9
52	***	***	2.016	306.2	307.2	307.2	306.2	306.2	306.2	305.1	303.5	303.1	304.0	305.1	304.8	304.9
57	***	***	2.012	306.2	306.2	306.2	306.2	306.2	306.2	304.8	303.6	302.7	303.7	304.9	304.4	304.5
62	***	***	2.010	306.2	306.2	306.2	306.2	306.2	306.2	304.8	303.3	302.3	303.8	304.4	304.1	304.5
67	***	***	2.009	306.2	306.2	306.2	306.2	305.2	305.2	304.5	303.1	302.2	303.8	304.3	303.8	304.2
72	***	***	2.008	305.2	306.2	306.2	305.2	305.2	305.2	304.4	302.7	302.3	303.5	303.9	303.9	303.9
82	***	***	2.004	305.2	306.2	306.2	305.2	305.2	305.2	304.4	302.7	302.1	303.8	303.9	303.9	304.1
92	***	***	2.002	305.2	305.2	305.2	305.2	305.2	305.2	303.8	302.0	301.6	303.0	303.2	303.4	303.5
102	***	***	2.000	305.2	305.2	305.2	305.2	304.2	304.2	303.4	301.7	301.3	302.7	303.0	303.1	303.2
112	***	***	1.998	304.2	305.2	305.2	305.2	304.2	304.2	303.2	301.6	301.0	302.6	302.9	302.7	302.9
122	***	***	1.995	304.2	305.2	305.2	305.2	304.2	304.2	303.0	301.4	301.0	302.4	302.7	302.5	302.7
132	***	***	1.994	304.2	305.2	305.2	304.2	304.2	304.2	302.9	301.3	300.9	302.3	302.5	302.4	302.5
142	***	***	1.991	304.2	305.2	305.2	304.2	304.2	304.2	302.6	301.0	300.6	302.4	302.3	302.1	302.4
152	***	***	1.991	304.2	304.2	304.2	304.2	304.2	303.2	302.7	301.0	300.8	302.0	302.1	302.2	302.3
162	***	***	1.989	304.2	304.2	304.2	304.2	303.2	303.2	302.4	300.9	300.5	302.0	302.2	302.0	302.0
172	***	***	1.988	304.2	304.2	304.2	304.2	303.2	303.2	302.4	300.8	300.4	302.0	302.0	302.0	302.0
182	***	***	1.987	304.2	304.2	304.2	304.2	303.2	303.2	302.3	300.7	300.4	301.8	302.0	301.9	301.9

COORDINATES

I	R (M)	THETA (DEG)	Z (M)
1	0.0	***	-0.152
2	0.0	***	-0.076
3	0.0	***	0.0
4	0.0	***	0.076
5	0.0	***	0.152
6	0.0	***	0.229
7	0.0	***	0.530
8	0.0	***	0.610
9	0.0	***	0.686
10	0.0	***	0.762
11	0.0	***	0.838
12	0.0	***	0.914
13	0.0	***	0.991

Table 6B — Inferred Pressurant Distribution, Scaling Run 27, Test Configuration 1: One 2.54-cm Nozzle [(J) indicates thermocouple on an inlet jet centerline]

t (s)	$\bar{T}$ (°C)	$\bar{T}_s$ (°C)	$\bar{T}_p$ (°C)	β	β/θ	$\bar{X}$	Pressurant Fractions (X) at Locations I: 1	2	3(J)	4	5	6	7	8	9	10	11	12	13
COMMENCE VALVE OPENING																			
0.0	27.2	27.2	63.8	4.4	0.0000	0.000	0.000	0.000	0.000	0.000	0.000	0.000	0.000	0.000	0.000	0.000	0.000	0.000	
1.0	30.2	30.2	30.0	132.8	8.8431	.064	-5.915	5.1111	0.624	5.111	-.402	-.402	.149	-5.363	-.402	-3.709	-3.710	-.402	.149
VALVE FULLY OPEN																			
2.0	33.6	34.2	30.2	36.1	2.9674	.138	-.523	.236	1.753	-.017	-.017	-.017	-.043	-.017	.160	.008	.059	.135	.084
3.0	36.4	38.0	29.8	17.7	1.2164	.196	-.157	.211	.946	.088	.088	.088	.149	.174	.235	.137	.186	.235	.162
4.0	37.9	40.4	30.1	16.3	.9642	.242	-.033	.356	.795	.064	.064	.162	.201	.249	.298	.220	.249	.269	.249
5.0	38.8	42.0	30.6	16.3	.9088	.283	.068	.417	.767	.155	.155	.155	.234	.260	.304	.286	.269	.304	.304
6.0	39.3	43.2	31.0	16.0	.7943	.318	.159	.489	.819	.159	.159	.241	.233	.299	.332	.291	.316	.332	.299
7.0	39.6	44.0	31.4	15.8	.7110	.348	.180	.498	.857	.220	.220	.259	.251	.339	.339	.331	.355	.339	.331
8.0	39.6	44.4	31.7	16.7	.7250	.375	.249	.485	.877	.249	.249	.249	.312	.351	.375	.367	.367	.383	.367
9.0	39.6	44.8	32.0	16.7	.8600	.407	.278	.590	.903	.278	.278	.278	.317	.395	.395	.387	.403	.395	.387
10.0	39.7	45.2	32.3	16.0	.5435	.426	.304	.615	.925	.304	.304	.304	.366	.397	.405	.383	.397	.413	.428
COMMENCE VALVE CLOSURE																			
11.0	39.6	45.4	32.5	16.4	.5262	.445	.321	.632	.943	.321	.321	.321	.352	.437	.422	.414	.437	.437	.422
12.0	39.5	45.3	32.6	7.9	.5439	.461	.320	.676	.953	.320	.320	.320	.391	.431	.439	.463	.439	.455	.471
VALVE FULLY CLOSED																			
13.0	39.3	45.2	32.7	4.5	.3078	.470	.315	.715	.935	.395	.315	.315	.379	.439	.451	.451	.467	.451	.443
14.0	38.7	44.4	32.3	1.9	.1293	.470	.383	.632	.756	.383	.383	.383	.416	.458	.466	.458	.458	.466	.474
15.0	38.1	43.5	32.0	2.0	.1363	.470	.428	.601	.688	.428	.428	.428	.403	.454	.446	.463	.454	.446	.446
16.0	37.6	42.9	31.7	1.6	.1074	.470	.407	.585	.675	.407	.407	.407	.407	.496	.470	.461	.470	.470	.452
17.0	37.3	42.5	31.5	1.1	.0742	.470	.380	.562	.653	.425	.425	.380	.444	.471	.480	.498	.444	.471	.480
18.0	36.9	41.9	31.2	1.7	.1156	.470	.441	.535	.630	.441	.441	.441	.404	.488	.460	.470	.470	.451	.441
19.0	36.7	41.7	31.2	.6	.0398	.470	.425	.520	.615	.425	.425	.425	.434	.473	.482	.501	.453	.473	.463
20.0	36.4	41.2	31.0	1.2	.0815	.470	.409	.506	.604	.409	.409	.409	.438	.506	.487	.506	.497	.477	.458
21.0	36.3	41.0	30.9	.6	.0418	.470	.378	.476	.575	.476	.476	.378	.447	.467	.486	.536	.467	.476	.476
22.0	35.8	40.4	30.6	1.9	.1296	.470	.438	.540	.540	.438	.438	.438	.438	.448	.499	.499	.448	.489	.458
23.0	35.8	40.4	30.6	0.0	0.0000	.470	.432	.535	.535	.432	.432	.432	.422	.494	.484	.525	.484	.463	.443
24.0	35.7	40.2	30.5	.6	.0448	.470	.451	.503	.503	.451	.503	.399	.441	.441	.513	.534	.430	.482	.462
25.0	35.5	40.0	30.5	.7	.0456	.470	.477	.477	.477	.477	.477	.477	.414	.466	.508	.508	.456	.477	.424
26.0	35.5	40.0	30.5	0.0	0.0000	.470	.460	.460	.565	.460	.460	.460	.407	.481	.491	.533	.460	.449	.428
27.0	35.2	39.5	30.3	1.4	.0937	.470	.435	.435	.543	.435	.543	.435	.435	.456	.521	.532	.424	.467	.456
28.0	35.0	39.3	30.2	.7	.0482	.470	.423	.423	.533	.423	.533	.423	.434	.500	.533	.511	.467	.478	.434
29.0	35.0	39.3	30.2	0.0	0.0000	.470	.445	.500	.500	.500	.500	.445	.412	.489	.500	.511	.456	.445	.412
30.0	35.0	39.3	30.2	0.0	0.0000	.470	.477	.477	.477	.477	.477	.477	.433	.455	.499	.543	.411	.466	.444
31.0	34.7	38.9	30.0	1.4	.0993	.470	.466	.466	.466	.466	.466	.466	.443	.466	.534	.534	.421	.477	.443
32.0	34.4	38.5	29.9	1.5	.1034	.470	.434	.434	.530	.434	.530	.434	.410	.480	.527	.515	.457	.480	.410
33.0	34.4	38.5	29.9	0.0	0.0000	.470	.530	.414	.530	.414	.530	.414	.402	.495	.519	.553	.449	.449	.414
34.0	34.4	38.5	29.9	0.0	0.0000	.470	.498	.440	.498	.498	.498	.440	.405	.498	.486	.568	.440	.428	.417

Table 7A — Scaling Run 28, Test Configuration 1: One 2.54-cm Nozzle
[(J) indicates thermocouple on an inlet jet centerline]

t (s)	Press Tank P (atm)	T_t (K)	Chamber P (atm)	Chamber Absolute Temperatures (K) at Locations I: 1	2	3(J)	4	5	6	7	8	9	10	11	12	13
-5	***	***	1.042	301.2	301.2	301.2	301.2	301.2	301.2	299.9	298.3	297.9	299.5	299.6	299.5	299.5
-4	***	***	1.043	301.2	301.2	301.2	301.2	301.2	301.2	299.7	298.6	298.0	299.5	299.9	299.4	299.3
-3	***	***	1.042	301.2	301.2	301.2	301.2	301.2	301.2	299.8	298.3	297.9	299.3	299.3	299.4	299.5
-2	***	***	1.041	301.2	301.2	301.2	301.2	301.2	301.2	299.9	298.2	298.0	299.3	299.5	299.5	299.5
-1	***	***	1.043	301.2	301.2	301.2	301.2	301.2	301.2	299.7	298.3	297.9	299.5	299.6	299.4	299.4
0	6.560	301.2	1.041	301.2	301.2	301.2	301.2	301.2	301.2	299.9	298.1	298.0	299.5	299.4	299.5	299.5
1	6.403	309.7	1.082	302.7	302.2	303.2	301.7	302.2	302.2	301.0	300.8	299.5	301.5	301.5	301.0	300.5
2	6.093	289.2	1.193	308.2	305.2	299.2	306.2	306.2	306.2	305.4	304.5	303.2	305.7	305.2	304.6	304.9
3	5.795	287.2	1.299	312.2	308.2	303.2	310.2	310.2	309.7	308.4	307.3	306.0	308.4	308.3	307.4	307.7
4	5.482	284.2	1.390	314.2	309.2	305.2	313.2	312.2	312.2	310.4	308.9	308.2	309.9	309.5	309.6	309.8
5	5.248	285.2	1.480	315.2	310.2	306.2	314.2	313.2	312.2	311.5	310.3	309.3	311.3	311.3	310.7	310.9
6	5.054	283.7	1.563	315.2	311.2	306.2	314.7	314.7	313.7	312.4	310.8	309.8	312.6	311.7	311.5	311.8
7	4.792	283.2	1.641	315.2	311.2	307.2	315.2	315.2	314.2	312.8	311.3	310.7	312.5	312.2	312.0	312.2
8	4.533	282.2	1.715	315.2	311.7	307.2	315.2	315.2	315.2	312.3	311.4	311.1	312.6	312.3	312.3	312.4
9	4.374	281.2	1.786	315.2	311.2	307.2	315.2	315.2	315.2	313.2	311.6	311.2	312.8	312.5	312.4	312.5
10	4.221	281.2	1.833	315.2	311.2	307.2	315.2	315.2	315.2	313.3	311.9	311.0	312.8	312.9	312.3	312.3
11	3.967	280.7	1.917	315.2	311.2	307.2	315.2	315.2	315.2	313.6	311.6	311.3	313.0	312.6	312.4	312.6
12	3.791	280.2	1.998	315.2	311.2	307.2	314.2	315.2	315.2	313.3	311.8	311.0	316.6	312.7	312.3	312.3
13	3.592	280.2	2.034	315.2	311.2	306.7	314.2	315.2	315.2	313.3	311.1	311.0	312.3	312.2	312.3	312.3
14	3.616	274.2	2.057	314.2	312.2	308.2	314.2	314.2	314.2	312.6	310.9	310.5	312.0	312.0	311.7	311.7
15	3.644	276.2	2.053	314.2	312.2	310.2	313.2	314.2	314.2	312.2	310.8	310.0	311.6	311.9	311.3	311.1
16	***	***	2.049	313.7	312.2	310.2	313.2	313.2	313.7	311.9	310.3	309.9	311.3	311.5	311.1	311.0
17	***	***	2.045	313.2	312.2	310.2	313.2	313.2	313.2	311.4	309.9	309.4	311.0	311.0	310.5	310.7
18	***	***	2.045	312.7	311.7	310.2	312.2	312.2	312.7	311.3	309.7	309.3	310.4	310.9	310.3	310.3
19	***	***	2.041	312.2	311.2	310.2	312.2	312.2	312.2	310.8	309.4	308.8	310.3	310.5	309.9	310.2
20	***	***	2.041	312.2	311.2	310.2	312.2	312.2	312.2	310.7	309.0	308.7	309.7	310.2	309.8	310.0
21	***	***	2.039	311.2	311.2	310.2	311.2	311.2	312.2	310.2	309.0	308.1	309.4	310.2	309.4	309.5
22	***	***	2.037	311.2	311.2	310.2	311.2	311.2	312.2	310.2	308.7	307.8	309.4	309.7	309.2	309.5
23	***	***	2.037	311.2	310.7	310.2	311.2	311.2	311.2	310.2	308.4	307.9	308.9	309.4	308.9	309.2
28	***	***	2.032	310.2	310.2	309.2	310.2	310.2	310.2	309.0	307.6	306.7	307.7	308.7	308.1	308.0
33	***	***	2.029	309.2	309.2	309.2	309.2	309.2	309.2	308.1	306.6	305.7	306.6	307.8	306.9	306.8
38	***	***	2.023	308.2	309.2	308.2	308.2	308.2	308.2	307.1	305.9	304.5	305.9	306.6	305.8	306.2
43	***	***	2.020	307.2	308.2	307.2	307.2	307.2	307.2	306.2	305.1	303.9	305.2	306.0	305.2	305.7
48	***	***	2.020	307.2	308.2	307.2	307.2	306.2	307.2	305.9	304.4	303.9	304.8	305.6	305.3	305.2
53	***	***	2.016	307.2	307.2	307.2	307.2	306.2	306.2	305.5	304.2	303.1	304.6	305.2	304.6	304.8
58	***	***	2.013	306.2	307.2	306.2	306.2	306.2	306.2	305.2	303.9	303.0	304.6	304.9	304.5	304.6
63	***	***	2.011	306.2	306.2	306.2	306.2	306.2	306.2	304.6	303.8	302.7	304.0	304.9	304.0	304.0
68	***	***	2.010	306.2	306.2	306.2	306.2	305.2	306.2	304.5	303.1	302.6	303.6	304.5	304.0	303.8
73	***	***	2.008	305.2	306.2	306.2	306.2	305.2	305.2	304.0	303.1	302.4	303.5	304.5	303.8	303.6
83	***	***	2.005	305.2	306.2	306.2	305.2	305.2	305.2	303.7	302.6	301.6	303.4	303.9	303.1	303.1
93	***	***	2.003	305.2	305.2	305.2	305.2	305.2	305.2	303.6	302.1	301.7	303.0	303.1	303.1	303.3
103	***	***	2.000	305.2	305.2	305.2	305.2	304.2	305.2	303.1	301.8	301.1	302.9	303.1	302.6	302.9
113	***	***	1.998	305.2	305.2	305.2	305.2	304.2	304.2	303.0	301.7	301.1	302.5	302.9	302.6	302.7
123	***	***	1.996	304.2	305.2	305.2	305.2	304.2	304.2	302.9	301.5	301.0	302.5	302.7	302.5	302.5
133	***	***	1.995	304.2	305.2	305.2	304.2	304.2	304.2	302.7	301.4	300.8	302.3	302.5	302.3	302.4
143	***	***	1.992	304.2	305.2	305.2	304.2	304.2	304.2	302.4	301.0	300.6	302.3	302.3	302.1	302.3
153	***	***	1.990	304.2	305.2	305.2	304.2	304.2	303.2	302.4	300.9	300.6	302.2	302.1	302.2	302.3
163	***	***	1.990	304.2	304.2	304.2	304.2	303.2	303.2	302.4	301.0	300.6	302.0	302.2	302.0	302.1
173	***	***	1.989	304.2	305.2	304.2	304.2	303.2	303.2	302.2	300.8	300.5	301.9	302.0	301.9	301.9
183	***	***	1.988	304.2	305.2	304.2	304.2	303.2	303.2	302.1	300.8	300.4	301.8	302.0	301.8	301.8

COORDINATES

I	R (M)	THETA (DEG)	Z (M)
1	0.0	***	-0.152
2	0.0	***	-0.076
3	0.0	***	0.0
4	0.0	***	0.076
5	0.0	***	0.152
6	0.0	***	0.229
7	0.0	***	0.530
8	0.0	***	0.610
9	0.0	***	0.686
10	0.0	***	0.762
11	0.0	***	0.838
12	0.0	***	0.914
13	0.0	***	0.991

Table 7B — Inferred Pressurant Distribution, Scaling Run 28, Test Configuration 1: One 2.54-cm Nozzle [(J) indicates thermocouple on an inlet jet centerline]

t (s)	$\bar{T}$ (°C)	$\bar{T}_s$ (°C)	$\bar{T}_p$ (°C)	β	β/θ	$\bar{X}$	Pressurant Fractions (X) at Locations I: 1	2	3(J)	4	5	6	7	8	9	10	11	12	13
COMMENCE VALVE OPENING																			
0.0	26.9	26.9	65.1	2.9	0.0000	0.000	0.000	0.000	0.000	0.000	0.000	0.000	0.000	0.000	0.000	0.000	0.000	0.000	
1.0	28.3	28.2	32.3	285.0	9.6497	.033	.043	-.081	.167	-.205	-.081	-.081	-.032	.315	.043	.167	.191	.043	-.056
VALVE FULLY OPEN																			
2.0	31.8	32.0	30.2	59.4	5.1275	.113	-1.063	.611	3.959	.053	.053	.053	-.226	-.728	-.058	-.617	-.393	-.003	-.170
3.0	35.0	36.4	28.5	20.0	1.4854	.177	-.202	.332	1.000	.065	.065	.132	.132	.038	.198	.078	.078	.212	.172
4.0	37.0	39.2	29.4	16.5	1.0159	.226	-.068	.440	.846	.034	.135	.135	.186	.156	.216	.196	.227	.227	.206
5.0	38.1	41.2	30.0	16.3	.9618	.270	.026	.472	.829	.115	.204	.204	.240	.186	.267	.222	.213	.276	.258
6.0	38.8	42.5	30.5	15.9	.8311	.307	.136	.468	.884	.178	.178	.261	.261	.244	.319	.211	.277	.302	.277
7.0	39.3	43.5	30.9	15.5	.7346	.339	.210	.527	.845	.210	.210	.289	.297	.274	.313	.289	.305	.329	.313
8.0	39.5	44.3	31.3	15.5	.6719	.367	.261	.531	.878	.261	.261	.261	.307	.315	.330	.330	.346	.353	.346
9.0	39.5	44.7	31.6	16.1	.6501	.393	.289	.594	.899	.289	.289	.289	.342	.327	.350	.342	.357	.373	.365
10.0	39.5	45.0	31.8	15.9	.5833	.415	.313	.616	.919	.313	.313	.313	.359	.328	.389	.366	.351	.404	.404
11.0	39.6	45.4	32.1	15.6	.5276	.434	.337	.638	.939	.337	.337	.337	.359	.374	.389	.374	.397	.419	.404
COMMENCE VALVE CLOSURE																			
12.0	39.7	45.9	32.5	14.9	.6097	.457	.371	.670	.968	.446	.371	.371	.416	.394	.446	.140	.423	.461	.461
13.0	39.3	45.4	32.4	16.0	.5503	.472	.349	.656	1.002	.426	.349	.349	.395	.426	.426	.441	.441	.441	.441
VALVE FULLY CLOSED																			
14.0	39.0	43.1	32.3	2.7	.0927	.473	.404	.561	.873	.404	.404	.404	.428	.420	.443	.443	.436	.467	.467
15.0	38.4	44.2	31.9	3.7	.1285	.473	.393	.554	.716	.473	.393	.393	.449	.417	.473	.465	.433	.490	.506
16.0	37.8	43.4	31.5	3.9	.1355	.473	.406	.532	.701	.448	.448	.406	.448	.431	.457	.465	.440	.482	.490
17.0	37.2	42.6	31.2	4.2	.1432	.473	.419	.507	.683	.419	.419	.419	.463	.437	.472	.463	.455	.507	.490
18.0	37.2	42.6	31.2	0.0	0.0000	.473	.428	.516	.648	.472	.472	.428	.437	.419	.446	.481	.428	.490	.490
19.0	36.6	41.7	30.8	4.4	.1519	.473	.445	.537	.629	.445	.445	.445	.454	.418	.464	.464	.436	.500	.473
20.0	36.6	41.7	30.8	0.0	0.0000	.473	.433	.524	.616	.433	.433	.433	.451	.442	.460	.506	.451	.497	.478
21.0	36.3	41.3	30.7	2.3	.0796	.473	.487	.487	.581	.487	.487	.393	.459	.403	.478	.497	.412	.497	.487
22.0	36.0	40.9	30.5	2.4	.0822	.473	.478	.478	.574	.478	.478	.382	.449	.420	.497	.488	.449	.507	.478
23.0	36.0	40.9	30.5	0.0	0.0000	.473	.455	.503	.551	.455	.455	.455	.426	.426	.465	.513	.455	.513	.484
24.0	36.0	40.9	30.5	0.0	0.0000	.473	.441	.537	.537	.441	.441	.441	.441	.412	.470	.527	.431	.518	.518
25.0	35.5	40.3	30.2	3.7	.1286	.473	.463	.513	.513	.463	.463	.413	.453	.383	.503	.513	.423	.543	.513
26.0	35.4	40.0	30.1	1.3	.0444	.473	.494	.494	.494	.494	.494	.393	.434	.404	.505	.494	.434	.525	.494
27.0	35.4	40.0	30.1	0.0	0.0000	.473	.473	.473	.473	.473	.473	.473	.423	.423	.494	.514	.463	.504	.494
28.0	35.2	39.8	30.1	1.3	.0452	.473	.457	.457	.559	.457	.457	.457	.447	.406	.488	.539	.426	.498	.508
29.0	35.1	39.6	30.0	1.3	.0460	.473	.442	.442	.546	.442	.442	.442	.463	.390	.515	.546	.411	.536	.536
30.0	34.9	39.4	29.9	1.4	.0469	.473	.434	.434	.539	.434	.434	.434	.444	.423	.539	.528	.444	.539	.528
31.0	34.8	39.2	29.8	1.4	.0478	.473	.414	.414	.521	.414	.521	.414	.446	.446	.510	.542	.478	.521	.510
32.0	34.8	39.2	29.8	0.0	0.0000	.473	.428	.482	.482	.482	.482	.428	.439	.428	.482	.546	.460	.503	.514
33.0	34.8	39.2	29.8	0.0	0.0000	.473	.462	.462	.462	.462	.462	.462	.441	.409	.494	.558	.419	.526	.537
34.0	34.4	38.8	29.6	2.9	.0984	.473	.448	.448	.448	.448	.448	.448	.459	.404	.525	.558	.426	.547	.547

Table 8A — Scaling Run 29, Test Configuration 1: One 2.54-cm Nozzle
[(J) indicates thermocouple on an *inlet jet centerline*]

t (s)	Press Tank P (atm)	T_s (K)	Chamber P (atm)	Chamber Absolute Temperatures (K) at Locations I: 1	2	3(J)	4	5	6	7	8	9	10	11	12	13
-5	***	***	1.054	301.2	301.2	301.2	301.2	301.2	301.2	299.7	298.2	297.8	299.7	299.5	299.5	299.5
-4	***	***	1.053	301.2	301.2	301.2	301.2	301.2	301.2	299.8	298.3	298.0	299.5	299.5	299.5	299.4
-3	***	***	1.054	301.2	301.2	301.2	301.2	301.2	301.2	299.5	298.4	297.7	299.5	299.7	299.3	299.3
-2	***	***	1.053	301.2	301.2	301.2	301.2	301.2	301.2	299.8	298.3	297.9	299.5	299.5	299.4	299.5
-1	***	***	1.053	301.2	301.2	301.2	301.2	301.2	301.2	299.7	298.5	298.0	299.4	299.7	299.5	299.4
0	6.560	301.2	1.054	301.2	301.2	301.2	301.2	301.2	301.2	299.7	298.3	297.9	299.5	299.6	299.4	299.4
1	6.316	301.2	1.053	301.2	301.2	301.2	301.2	301.2	301.2	299.9	298.4	298.1	299.3	299.5	299.6	299.4
2	6.304	297.2	1.135	304.2	303.7	300.7	302.7	303.2	303.7	302.5	302.2	301.0	303.0	302.9	302.2	302.4
3	5.988	287.2	1.246	310.2	307.2	300.2	308.2	308.2	307.2	306.5	305.8	304.4	306.9	306.4	305.9	306.2
4	5.688	286.7	1.347	312.7	309.2	303.2	311.2	311.2	310.2	309.0	308.1	307.0	309.0	309.2	308.3	308.5
5	5.373	285.2	1.436	314.2	310.2	306.2	313.2	313.2	312.2	310.9	309.4	308.8	310.8	310.6	310.2	310.4
6	5.160	284.2	1.524	315.2	311.2	306.2	314.2	314.2	313.2	311.9	310.6	309.7	311.6	311.5	310.9	311.3
7	4.935	283.7	1.604	315.2	311.2	306.2	315.2	314.7	314.2	313.0	310.9	310.4	312.3	311.9	311.6	311.9
8	4.680	282.2	1.681	315.2	311.2	306.2	315.2	315.2	314.2	313.0	311.5	311.1	312.4	312.5	311.9	312.0
9	4.483	281.7	1.752	315.2	311.7	307.2	315.2	315.2	315.2	313.3	311.3	311.0	312.6	312.3	312.2	312.4
10	4.307	281.2	1.823	315.2	312.2	307.2	315.2	315.2	315.2	313.2	311.6	311.0	312.5	312.5	312.3	312.3
11	4.065	281.2	1.890	315.2	311.2	307.2	315.2	315.2	315.2	313.6	311.4	311.0	312.6	312.3	312.2	312.4
12	3.936	280.2	1.953	315.2	311.2	307.2	314.7	315.2	315.2	313.2	311.7	311.0	312.3	312.5	312.2	312.2
13	3.758	280.2	2.014	315.2	311.2	307.2	314.2	315.2	315.2	313.6	311.3	311.0	312.5	312.2	312.2	312.3
14	3.640	275.7	2.059	314.7	310.7	306.2	313.7	314.7	314.7	313.0	311.3	310.6	312.2	312.2	312.0	312.0
15	3.622	276.2	2.063	314.2	312.2	309.2	313.2	314.2	314.2	312.6	310.8	310.2	311.5	311.8	311.6	311.5
16	***	***	2.058	313.2	312.2	310.2	313.2	313.2	313.2	312.2	310.4	309.9	311.3	311.5	311.2	311.3
17	***	***	2.054	313.2	311.7	310.2	313.2	313.2	313.2	311.7	310.3	309.6	310.9	311.2	310.9	311.0
18	***	***	2.053	313.2	311.2	310.2	312.2	313.2	313.2	311.6	310.1	309.3	310.4	311.1	310.4	310.4
19	***	***	2.050	312.2	311.2	310.2	312.2	312.2	312.7	311.1	309.4	308.9	310.2	310.5	310.2	310.3
20	***	***	2.049	312.2	311.2	310.2	312.2	312.2	312.2	310.7	309.4	308.5	309.7	310.6	310.0	310.0
21	***	***	2.046	312.2	311.2	310.2	312.2	312.2	312.2	310.4	308.9	308.3	309.6	310.0	309.7	310.0
22	***	***	2.046	312.2	311.2	310.2	311.7	311.2	311.7	310.2	308.6	308.1	309.0	309.9	309.5	309.6
23	***	***	2.044	311.2	311.2	310.2	311.2	311.2	311.2	309.8	308.5	307.5	308.9	309.8	309.0	309.4
28	***	***	2.038	310.2	310.2	309.2	310.2	310.2	310.2	309.1	307.4	306.6	308.1	308.5	308.1	308.4
33	***	***	2.034	309.2	309.2	309.2	309.2	309.2	309.2	308.0	306.9	305.8	306.7	308.1	306.9	306.8
38	***	***	2.030	309.2	309.2	309.2	309.2	308.2	308.2	307.3	306.1	304.8	306.0	307.0	305.9	306.3
43	***	***	2.027	308.2	308.2	308.2	308.2	308.2	308.2	306.5	305.6	304.2	305.5	306.6	305.3	305.6
48	***	***	2.024	308.2	308.2	308.2	308.2	307.2	307.2	306.0	305.1	303.9	305.0	305.9	304.9	305.1
53	***	***	2.023	307.2	307.2	307.2	307.2	307.2	307.2	305.9	304.5	303.5	305.0	305.2	304.7	304.9
58	***	***	2.020	307.2	307.2	307.2	307.2	306.2	306.2	305.4	304.4	303.1	304.8	305.1	304.4	304.6
63	***	***	2.018	307.2	307.2	307.2	306.2	306.2	306.2	305.1	303.9	302.8	304.5	304.8	304.0	304.6
68	***	***	2.016	306.2	307.2	306.2	306.2	306.2	306.2	304.7	303.6	302.4	304.0	304.5	304.0	304.4
73	***	***	2.014	306.2	306.2	306.2	306.2	305.2	305.7	304.5	302.3	302.3	303.9	304.2	303.8	304.2
83	***	***	2.013	306.2	306.2	306.2	305.2	305.2	305.2	303.8	302.4	302.1	303.3	303.7	303.5	303.6
93	***	***	2.010	305.2	305.2	305.2	305.2	305.2	305.2	303.7	302.2	301.8	303.0	303.2	303.1	303.4
103	***	***	2.007	305.2	305.2	305.2	305.2	304.2	304.2	303.3	302.0	301.4	302.8	303.2	302.8	302.9
113	***	***	2.005	305.2	305.2	305.2	305.2	304.2	304.2	303.1	301.6	301.1	302.5	302.9	302.6	302.7
123	***	***	2.002	304.2	305.2	305.2	304.2	304.2	304.2	302.7	301.2	300.9	302.6	302.5	302.3	302.6
133	***	***	2.000	304.2	305.2	305.2	304.2	304.2	304.2	302.5	301.0	300.8	302.4	302.4	302.3	302.5
143	***	***	2.000	304.2	305.2	304.2	304.2	304.2	304.2	302.5	301.0	300.8	302.3	302.3	302.2	302.3
153	***	***	1.998	304.2	304.2	304.2	304.2	304.2	304.2	302.4	301.0	300.5	302.2	302.3	302.0	302.0
163	***	***	1.997	304.2	304.2	304.2	304.2	303.2	303.2	302.3	300.9	300.5	302.0	302.1	302.0	302.1
173	***	***	1.994	304.2	304.2	304.2	304.2	303.2	303.2	302.2	300.7	300.6	302.0	301.9	301.9	302.0
183	***	***	1.993	304.2	304.2	304.2	304.2	303.2	303.2	302.0	300.6	300.6	302.0	301.7	301.9	301.9

COORDINATES

I	R (M)	THETA (DEG)	Z (M)
1	0.0	***	-0.152
2	0.0	***	-0.076
3	0.0	***	0.0
4	0.0	***	0.076
5	0.0	***	0.152
6	0.0	***	0.229
7	0.0	***	0.530
8	0.0	***	0.610
9	0.0	***	0.686
10	0.0	***	0.762
11	0.0	***	0.838
12	0.0	***	0.914
13	0.0	***	0.991

Table 8B — Inferred Pressurant Distribution, Scaling Run 29, Test Configuration 1: One 2.54-cm Nozzle [(J) indicates thermocouple on an inlet jet centerline]

t (s)	$\bar{T}$ (°C)	$\bar{T}_c$ (°C)	$\bar{T}_p$ (°C)	β	β/θ	$\bar{X}$	Pressurant Fractions (X) at Locations I 1	2	3(J)	4	5	6	7	8	9	10	11	12	13
COMMENCE VALVE OPENING																			
0.0	26.9	26.9	162.8	-.2	0.0000	0.000	0.000	0.000	0.000	0.000	0.000	0.000	0.000	0.000	0.000	0.000	0.000	0.000	
1.0	26.9	26.9	30.4	31070.9	-31.0021	-.001	-.008	-.008	-.008	-.008	-.008	-.008	.049	.021	.049	-.093	-.036	.049	-.008
VALVE FULLY OPEN																			
2.0	29.5	29.6	26.6	132.8	10.1625	.063	-.078	.086	1.072	.415	.251	.086	-.012	-.374	-.144	-.210	-.177	-.012	-.078
3.0	33.2	34.0	27.9	32.7	2.6471	.136	-.298	.189	1.324	.026	.026	.189	.059	-.055	.108	-.022	.059	.108	.059
4.0	35.8	37.6	28.2	18.7	1.3013	.194	-.083	.290	.930	.077	.077	.184	.152	.098	.173	.141	.120	.194	.173
5.0	37.6	40.3	29.1	15.1	.8797	.240	.035	.392	.749	.125	.125	.214	.196	.205	.223	.196	.214	.232	.214
6.0	38.5	41.9	29.7	16.1	.9130	.282	.084	.411	.821	.166	.166	.248	.231	.223	.264	.248	.256	.289	.256
7.0	39.0	43.1	30.3	15.8	.7786	.316	.169	.482	.874	.169	.209	.248	.224	.279	.287	.271	.303	.310	.287
8.0	39.2	43.8	30.7	16.1	.7451	.347	.221	.527	.909	.221	.221	.297	.274	.282	.282	.312	.305	.335	.328
9.0	39.5	44.5	31.1	15.3	.6192	.373	.268	.530	.866	.268	.268	.268	.298	.343	.335	.343	.365	.358	.343
10.0	39.5	44.9	31.4	15.8	.6244	.397	.298	.520	.891	.298	.298	.298	.335	.350	.364	.379	.379	.379	.379
11.0	39.5	45.1	31.7	16.4	.5962	.419	.313	.612	.910	.313	.313	.313	.321	.381	.381	.388	.410	.403	.388
COMMENCE VALVE CLOSURE																			
12.0	39.4	45.2	31.9	16.4	.5421	.438	.327	.626	.926	.364	.327	.327	.364	.372	.394	.424	.409	.416	.416
13.0	39.4	45.4	32.1	-487.5	.5000	.455	.340	.641	.942	.416	.340	.340	.348	.416	.408	.423	.446	.431	.423
VALVE FULLY CLOSED																			
14.0	38.9	45.0	32.0	-439.9	.4511	.468	.357	.664	1.008	.434	.357	.357	.373	.396	.419	.426	.434	.426	.426
15.0	39.6	45.9	32.3	119.6	-.1226	.468	.394	.542	.764	.468	.394	.394	.402	.431	.446	.475	.453	.453	.461
16.0	38.8	44.8	31.9	-150.4	.1542	.468	.443	.520	.675	.443	.443	.443	.404	.435	.443	.466	.451	.459	.451
17.0	38.2	44.0	31.6	-127.4	.1306	.468	.426	.546	.666	.426	.426	.426	.426	.426	.450	.482	.458	.466	.458
18.0	38.0	43.8	31.5	-32.5	.0338	.468	.401	.564	.645	.482	.401	.401	.410	.418	.450	.499	.442	.482	.482
19.0	37.6	43.2	31.2	-101.5	.1041	.468	.450	.533	.617	.450	.450	.408	.416	.441	.450	.483	.458	.466	.458
20.0	37.4	43.0	31.1	-34.8	.0357	.468	.435	.519	.604	.435	.435	.435	.435	.427	.469	.511	.435	.469	.469
21.0	37.0	42.3	30.9	-107.5	.1102	.468	.421	.508	.595	.421	.421	.421	.447	.455	.473	.508	.473	.482	.455
22.0	37.0	42.2	30.9	0.0	0.0000	.468	.394	.481	.568	.437	.481	.437	.437	.455	.463	.533	.455	.472	.463
23.0	36.7	41.9	30.7	-74.4	.0763	.468	.454	.454	.543	.454	.454	.454	.445	.436	.489	.516	.436	.489	.454
24.0	36.5	41.7	30.6	-38.1	.0390	.468	.435	.525	.525	.435	.480	.435	.417	.453	.480	.507	.462	.490	.444
25.0	36.5	41.7	30.6	0.0	0.0000	.468	.416	.506	.506	.506	.506	.416	.425	.443	.461	.524	.452	.461	.452
26.0	36.2	41.3	30.4	-77.9	.0799	.468	.477	.477	.477	.477	.477	.477	.441	.431	.468	.524	.413	.468	.468
27.0	35.9	40.9	30.3	-80.5	.0825	.468	.464	.464	.558	.464	.464	.464	.436	.407	.483	.511	.426	.483	.454
28.0	35.8	40.7	30.2	-41.3	.0423	.468	.455	.455	.551	.455	.455	.455	.417	.445	.484	.503	.465	.484	.455
29.0	35.9	40.9	30.3	41.3	-.0423	.468	.436	.436	.531	.436	.531	.436	.417	.446	.465	.531	.455	.484	.474
30.0	35.8	40.7	30.2	-41.3	.0423	.468	.415	.415	.511	.415	.511	.511	.425	.434	.463	.540	.434	.501	.501
31.0	35.6	40.4	30.1	-42.0	.0431	.468	.394	.442	.491	.491	.491	.491	.433	.413	.462	.539	.423	.500	.510
32.0	35.5	40.2	30.0	-42.7	.0438	.468	.378	.476	.476	.476	.476	.476	.437	.397	.476	.554	.427	.515	.515
33.0	35.2	39.8	29.9	-87.7	.0900	.468	.462	.462	.462	.462	.462	.462	.432	.402	.472	.553	.412	.512	.522
34.0	35.0	39.6	29.8	-45.1	.0462	.468	.448	.448	.448	.448	.448	.448	.438	.397	.499	.570	.428	.530	.530

Table 9A — Scaling Run 30, Test Configuration 1: One 2.54-cm Nozzle
[(J) indicates thermocouple on an inlet jet centerline]

t (s)	Press Tank P (atm)	T_s (K)	Chamber P (atm)	Chamber Absolute Temperatures (K) at Locations I: 1	2	3(J)	4	5	6	7	8	9	10	11	12	13
-5	***	***	1.054	301.2	301.2	301.2	301.2	301.2	301.2	299.9	298.2	298.0	299.4	299.5	299.5	299.5
-4	***	***	1.056	301.2	301.2	301.2	301.2	301.2	301.2	299.6	298.3	297.8	299.5	299.5	299.3	299.4
-3	***	***	1.054	301.2	301.2	301.2	301.2	301.2	301.2	299.9	298.3	298.0	299.3	299.5	299.5	299.4
-2	***	***	1.055	301.2	301.2	301.2	301.2	301.2	301.2	299.7	298.3	297.8	299.5	299.5	299.3	299.4
-1	***	***	1.054	301.2	301.2	301.2	301.2	301.2	301.2	299.9	298.1	298.1	299.4	299.5	299.5	299.5
0	6.532	301.2	1.064	301.2	301.7	301.2	301.2	301.2	301.2	299.8	298.9	298.5	300.2	300.2	299.7	299.7
1	6.233	299.2	1.153	305.2	303.2	301.2	303.2	304.2	304.2	303.2	302.6	301.8	303.5	303.1	302.9	302.8
2	5.950	287.7	1.262	310.2	306.7	301.2	308.7	308.2	307.7	307.0	306.0	304.8	307.0	306.7	306.0	306.3
3	5.641	286.2	1.361	313.2	309.2	304.2	311.2	311.2	311.2	309.2	308.3	306.9	309.0	309.3	308.4	308.4
4	5.378	284.7	1.452	314.7	310.7	305.7	313.7	313.7	312.7	310.9	309.6	308.5	310.5	310.4	309.9	310.0
5	5.120	284.2	1.534	315.2	311.2	306.2	314.2	314.2	314.2	312.1	310.4	309.8	311.6	311.1	311.0	311.3
6	4.898	283.2	1.618	315.2	311.2	306.2	315.2	315.2	314.2	312.5	310.9	310.3	312.0	311.8	311.5	311.7
7	4.666	282.2	1.696	315.2	311.7	306.7	315.2	315.2	314.7	312.8	311.5	310.6	312.4	312.4	311.7	311.9
8	4.435	281.2	1.766	315.2	311.2	307.2	315.2	315.2	315.2	313.3	311.5	311.0	312.6	312.4	312.1	312.3
9	4.312	280.7	1.837	315.2	311.2	307.2	315.2	315.2	315.2	313.3	311.9	311.1	312.4	312.8	312.3	312.2
10	4.092	280.2	1.902	315.2	311.2	307.2	315.2	315.2	315.2	313.4	311.6	311.2	312.5	312.5	312.4	312.3
11	3.914	280.2	1.964	315.2	311.2	307.2	315.2	315.2	315.2	313.1	311.7	311.0	312.6	312.5	312.1	312.5
12	3.730	279.7	2.026	315.2	311.2	307.2	314.2	315.2	315.2	313.1	311.4	311.0	312.3	312.3	312.2	312.2
13	3.661	271.2	2.056	314.2	311.2	305.2	314.2	314.2	314.2	312.6	310.8	310.6	312.2	311.9	311.9	312.0
14	3.472	276.2	2.052	313.7	311.7	305.7	313.7	313.7	313.7	312.2	310.5	310.3	311.6	311.5	311.6	311.6
15	***	***	2.047	313.2	311.2	310.2	313.2	313.2	313.2	311.8	310.4	309.8	311.1	311.5	311.2	311.0
16	***	***	2.044	313.2	311.2	310.2	313.2	313.2	313.2	311.6	309.9	309.7	310.7	311.0	311.0	310.9
17	***	***	2.042	312.7	311.2	310.2	312.7	312.7	313.2	311.0	309.8	309.0	310.4	310.9	310.4	310.5
18	***	***	2.040	312.2	311.2	309.2	312.2	312.2	312.2	310.9	309.2	308.8	310.2	310.3	310.2	310.3
19	***	***	2.039	312.2	310.7	309.2	312.2	311.7	312.2	310.5	309.2	308.3	309.7	310.4	310.0	310.0
20	***	***	2.036	312.2	310.2	310.2	311.2	311.2	311.2	310.2	308.8	308.1	309.5	309.9	309.7	310.0
21	***	***	2.036	311.2	310.2	309.2	311.2	311.2	311.2	310.0	308.7	307.9	309.0	309.9	309.5	309.5
22	***	***	2.034	311.2	310.2	309.2	311.2	310.7	311.2	309.6	308.7	307.3	308.9	309.9	309.1	309.4
27	***	***	2.029	310.2	310.2	309.2	310.2	310.2	310.2	308.9	307.2	306.6	308.0	308.6	308.2	308.5
32	***	***	2.024	309.2	309.2	309.2	309.2	309.2	309.2	308.1	306.7	305.5	307.0	308.0	307.0	307.6
37	***	***	2.022	309.2	309.2	308.2	309.2	308.2	309.2	307.4	305.8	304.8	306.5	307.1	306.7	306.9
42	***	***	2.020	308.2	308.2	308.2	308.2	308.2	308.2	307.0	305.3	304.4	305.2	306.4	306.1	306.5
47	***	***	2.016	307.2	307.2	307.2	307.2	307.2	307.2	306.6	305.0	303.9	305.5	306.0	305.8	305.9
52	***	***	2.013	307.2	307.2	307.2	307.2	307.2	307.2	305.8	304.7	303.9	305.0	306.2	305.7	305.4
57	***	***	2.009	306.2	307.2	306.2	306.2	306.2	306.2	305.4	304.2	303.2	304.7	305.5	305.0	305.3
62	***	***	2.008	306.2	306.2	306.2	306.2	306.2	306.2	305.2	303.7	302.7	304.4	305.1	304.5	304.7
67	***	***	2.007	306.2	306.2	306.2	306.2	305.2	306.2	304.8	303.2	302.5	304.0	304.5	304.4	304.5
72	***	***	2.006	306.2	306.2	306.2	306.2	305.2	305.2	304.4	303.1	302.7	303.8	304.5	304.2	304.2
82	***	***	2.001	305.2	306.2	306.2	305.2	305.2	305.2	304.0	302.5	301.7	303.2	304.0	303.6	304.0
92	***	***	2.001	305.2	305.2	305.2	305.2	305.2	305.2	303.3	302.4	301.8	302.8	303.6	303.3	303.1
102	***	***	1.998	305.2	305.2	305.2	305.2	304.2	304.2	303.1	301.8	301.2	303.0	303.1	302.8	303.1
112	***	***	1.996	304.2	305.2	305.2	305.2	304.2	304.2	303.0	301.5	301.1	302.5	302.8	302.5	302.7
122	***	***	1.994	304.2	305.2	305.2	305.2	304.2	304.2	303.0	301.5	301.2	302.5	302.7	302.5	302.6
132	***	***	1.992	304.2	305.2	305.2	304.2	304.2	304.2	302.6	301.1	300.8	302.3	302.5	302.4	302.4
142	***	***	1.991	304.2	305.2	305.2	304.2	304.2	304.2	302.6	301.2	300.8	301.8	302.4	302.4	302.2
152	***	***	1.988	304.2	305.2	305.2	304.2	303.2	303.2	302.5	300.9	300.6	301.9	302.0	302.2	302.3
162	***	***	1.988	304.2	305.2	305.2	304.2	303.2	303.2	302.3	300.9	300.4	301.9	302.3	302.0	302.0
172	***	***	1.986	304.2	305.2	305.2	304.2	303.2	303.2	302.2	300.7	300.4	301.8	302.0	301.9	302.0
182	***	***	1.985	304.2	305.2	305.2	304.2	303.2	303.2	302.1	300.7	300.3	301.8	301.9	301.9	301.9

COORDINATES

I	R (M)	THETA (DEG)	Z (M)
1	0.0	***	-0.152
2	0.0	***	-0.076
3	0.0	***	0.0
4	0.0	***	0.076
5	0.0	***	0.152
6	0.0	***	0.229
7	0.0	***	0.530
8	0.0	***	0.610
9	0.0	***	0.686
10	0.0	***	0.762
11	0.0	***	0.838
12	0.0	***	0.914
13	0.0	***	0.991

Table 9B — Inferred Pressurant Distribution, Scaling Run 30, Test Configuration 1:
One 2.54-cm Nozzle [(J) indicates thermocouple on an inlet jet centerline]

t (s)	$\bar{T}$ (°C)	$\bar{T}_o$ (°C)	$\bar{T}_p$ (°C)	β	β/θ	$\bar{X}$	Pressurant Fractions (X) at Locations I: 1	2	3(J)	4	5	6	7	8	9	10	11	12	13
COMMENCE VALVE OPENING																			
0.0	27.2	27.2	65.5	4.8	0.0000	0.000	0.000	0.000	0.000	0.000	0.000	0.000	0.000	0.000	0.000	0.000	0.000	0.000	
1.0	30.0	30.0	29.2	141.2	10.0313	.069	-1.428	1.690	3.560	1.066	-.181	-.181	-.680	-1.054	-.555	-.555	-.056	-.430	-.306
VALVE FULLY OPEN																			
2.0	33.5	34.2	29.1	33.9	2.6715	.139	-.398	.396	1.389	-.101	-.001	.098	-.041	-.021	.138	.038	.098	.138	.078
3.0	36.0	37.7	28.9	18.4	1.2385	.195	-.164	.348	.860	.064	.064	.064	.132	.132	.246	.200	.166	.212	.212
4.0	37.6	40.3	29.4	16.0	.9533	.242	-.036	.378	.793	.056	.056	.148	.185	.222	.286	.259	.268	.268	.259
5.0	38.5	41.5	29.9	16.0	.8336	.280	.060	.436	.812	.144	.144	.144	.202	.269	.286	.278	.319	.286	.261
6.0	38.9	42.9	30.4	16.7	.8669	.317	.140	.499	.858	.140	.140	.220	.244	.299	.315	.315	.331	.315	.299
7.0	39.3	43.8	30.8	16.0	.7389	.347	.200	.510	.838	.200	.200	.239	.278	.309	.347	.340	.340	.355	.340
8.0	39.4	44.4	31.2	15.9	.6307	.373	.243	.584	.849	.243	.243	.243	.281	.349	.357	.364	.379	.364	.349
9.0	39.5	44.8	31.5	16.1	.6295	.397	.273	.610	.872	.273	.273	.273	.311	.348	.378	.408	.378	.378	.385
10.0	39.5	45.1	31.7	16.2	.5649	.418	.294	.629	.891	.294	.294	.294	.323	.391	.391	.420	.420	.391	.398
COMMENCE VALVE CLOSURE																			
11.0	39.5	45.3	31.9	16.3	.5258	.436	.310	.646	.907	.310	.310	.310	.362	.399	.422	.429	.437	.429	.399
12.0	39.3	45.3	32.1	7.4	.5434	.454	.314	.654	.919	.390	.314	.314	.367	.427	.427	.458	.458	.427	.427
VALVE FULLY CLOSED																			
13.0	38.7	44.7	31.8	5.1	.3775	.463	.353	.623	1.048	.353	.353	.353	.368	.438	.422	.430	.453	.414	.407
14.0	38.1	43.9	31.4	1.8	.1346	.463	.395	.596	.717	.395	.395	.395	.403	.435	.451	.484	.459	.443	.443
15.0	37.4	42.8	31.0	2.4	.1791	.463	.399	.611	.653	.399	.399	.399	.399	.442	.459	.492	.459	.442	.459
16.0	36.9	42.2	30.8	1.5	.1140	.463	.384	.603	.646	.384	.384	.384	.401	.471	.454	.515	.489	.445	.454
17.0	36.6	41.8	30.6	1.1	.0790	.463	.397	.576	.621	.397	.397	.352	.424	.451	.487	.513	.469	.469	.460
18.0	36.3	41.4	30.4	1.1	.0815	.463	.402	.539	.677	.402	.402	.402	.393	.466	.466	.494	.484	.448	.439
19.0	36.2	41.1	30.4	.6	.0418	.463	.381	.567	.659	.381	.428	.381	.409	.446	.493	.520	.455	.446	.446
20.0	35.7	40.5	30.1	1.8	.1298	.463	.349	.590	.542	.446	.446	.446	.407	.455	.484	.513	.474	.446	.417
21.0	35.7	40.5	30.1	0.0	0.0000	.463	.418	.563	.611	.418	.418	.418	.399	.437	.476	.534	.447	.437	.437
22.0	35.4	40.1	30.0	1.2	.0904	.463	.400	.548	.598	.400	.450	.400	.420	.420	.519	.529	.440	.459	.430
23.0	35.2	39.9	29.9	.6	.0465	.463	.386	.537	.587	.386	.486	.386	.396	.466	.506	.537	.466	.456	.416
24.0	35.2	39.9	29.9	0.0	0.0000	.463	.363	.513	.564	.463	.463	.413	.403	.443	.503	.553	.443	.443	.443
25.0	34.9	39.4	29.7	1.3	.0956	.463	.440	.491	.543	.440	.440	.440	.409	.419	.522	.553	.429	.460	.429
26.0	34.6	39.0	29.6	1.3	.0954	.463	.424	.477	.530	.424	.424	.424	.424	.456	.530	.541	.467	.477	.414
27.0	34.6	39.0	29.6	0.0	0.0000	.463	.418	.471	.524	.418	.418	.418	.407	.492	.513	.545	.481	.471	.439
28.0	34.6	39.0	29.6	0.0	0.0000	.463	.404	.457	.510	.404	.404	.404	.414	.489	.520	.595	.478	.467	.467
29.0	34.5	38.8	29.5	.7	.0512	.463	.378	.539	.486	.378	.486	.378	.410	.453	.507	.593	.453	.475	.475
30.0	34.3	38.6	29.4	.7	.0523	.463	.353	.517	.463	.463	.463	.353	.419	.441	.528	.583	.452	.506	.473
31.0	34.0	38.1	29.3	1.5	.1080	.463	.441	.497	.441	.441	.441	.441	.396	.430	.520	.565	.441	.508	.452
32.0	33.9	37.9	29.2	.8	.0558	.463	.431	.488	.431	.431	.431	.431	.396	.454	.545	.568	.454	.511	.442
33.0	33.9	37.9	29.2	0.0	0.0000	.463	.425	.482	.425	.425	.425	.425	.390	.459	.551	.574	.470	.516	.448
34.0	33.7	37.7	29.1	.8	.0571	.463	.413	.471	.413	.413	.413	.413	.390	.483	.553	.565	.495	.541	.448

Table 10A — Scaling Run 31, Test Configuration 1: One 2.54-cm Nozzle
[(J) indicates thermocouple on an inlet jet centerline]

t (s)	Press Tank P (atm)	T_t (K)	Chamber P (atm)	Chamber Absolute Temperatures (K) at Locations I: 1	2	3(J)	4	5	6	7	8	9	10	11	12	13
-5	***	***	1.042	301.2	301.2	301.2	301.2	301.2	301.2	299.9	298.2	297.9	299.5	299.5	299.4	299.5
-4	***	***	1.043	301.2	301.2	301.2	301.2	301.2	301.2	299.8	298.5	297.9	299.3	299.6	299.5	299.3
-3	***	***	1.042	301.2	301.2	301.2	301.2	301.2	301.2	299.7	298.3	297.9	299.5	299.6	299.4	299.4
-2	***	***	1.041	301.2	301.2	301.2	301.2	301.2	301.2	299.9	298.2	298.0	299.4	299.4	299.5	299.5
-1	***	***	1.042	301.2	301.2	301.2	301.2	301.2	301.2	299.7	298.4	297.9	299.4	299.5	299.3	299.4
0	6.343	301.2	1.042	301.2	301.2	301.2	301.2	301.2	301.2	299.7	298.3	297.9	299.5	299.5	299.4	299.5
1	6.504	301.2	1.042	301.2	301.2	301.2	301.2	301.2	301.2	299.7	298.9	298.4	299.5	299.9	299.7	299.3
2	6.275	304.2	1.139	305.2	303.7	301.7	303.2	303.7	303.7	303.1	302.7	301.7	303.8	303.6	302.7	302.9
3	5.930	287.2	1.249	310.2	307.2	301.2	308.2	308.2	308.2	307.6	306.2	305.0	307.3	306.8	306.2	306.6
4	5.647	286.2	1.348	312.2	308.2	303.2	311.2	310.2	310.2	309.4	308.4	307.0	309.3	309.2	308.4	308.8
5	5.333	285.2	1.437	314.2	309.7	305.2	312.7	312.7	312.2	311.2	309.7	308.6	310.7	310.6	310.2	310.2
6	5.117	284.2	1.523	315.2	311.2	306.2	314.2	314.2	313.2	312.2	310.5	309.8	311.7	311.7	311.3	311.4
7	4.910	282.7	1.603	315.2	311.2	306.2	315.2	314.7	314.2	312.8	311.0	310.5	312.5	312.1	311.8	312.0
8	4.641	282.2	1.679	315.2	311.2	306.2	315.2	315.2	315.2	313.1	311.5	310.7	312.6	312.4	311.9	312.0
9	4.431	281.2	1.753	315.2	312.2	306.2	315.2	315.2	315.2	313.4	311.6	311.4	312.8	312.6	312.3	312.5
10	4.274	280.7	1.821	315.2	311.7	307.2	314.7	315.2	315.2	313.4	312.0	311.1	313.0	312.9	312.4	312.4
11	4.032	280.2	1.887	315.2	311.2	307.2	315.2	315.2	315.2	313.7	311.7	311.5	313.1	312.6	312.3	312.6
12	3.923	280.2	1.950	315.2	310.2	306.7	315.2	315.2	315.2	313.3	311.7	311.0	312.5	312.6	312.3	312.2
13	3.706	279.2	2.009	315.2	311.2	306.2	314.2	315.2	315.2	313.5	311.6	311.1	312.6	312.3	312.2	312.4
14	3.639	279.2	2.055	315.2	311.2	306.2	314.2	315.2	315.2	313.2	311.6	311.0	312.4	312.4	312.1	312.1
15	3.570	273.7	2.059	314.2	311.7	307.2	313.2	314.2	314.2	313.0	311.2	310.6	311.9	312.4	312.0	311.7
16	***	***	2.054	313.2	312.2	309.2	313.2	313.2	313.2	312.3	310.7	310.4	311.8	311.9	311.6	311.7
17	***	***	2.050	313.2	312.2	310.2	313.2	313.2	313.2	311.7	310.2	309.8	311.5	311.6	311.0	311.4
18	***	***	2.049	313.2	311.2	310.2	312.2	312.2	312.2	311.6	310.2	309.5	310.9	311.3	310.8	310.7
19	***	***	2.047	312.2	311.2	310.2	312.2	312.2	312.2	311.4	309.6	309.4	310.7	310.7	310.4	310.3
20	***	***	2.045	312.2	311.2	310.2	312.2	312.2	312.2	310.9	309.6	308.8	310.2	310.6	309.9	310.0
21	***	***	2.044	312.2	311.2	310.2	312.2	312.2	312.2	310.9	309.1	308.8	309.8	310.1	309.8	309.8
22	***	***	2.042	311.2	310.7	310.2	311.2	311.2	311.7	310.4	309.2	308.3	309.5	310.1	309.4	309.4
23	***	***	2.040	311.2	310.2	309.2	311.2	311.2	311.2	310.3	308.7	308.0	309.4	309.5	309.2	309.5
28	***	***	2.035	310.2	309.2	309.2	310.2	310.2	310.2	309.0	307.9	306.8	307.9	309.0	308.1	308.3
33	***	***	2.031	309.2	309.2	308.2	309.2	309.2	309.2	308.1	306.9	305.6	306.7	308.1	307.1	307.5
38	***	***	2.029	308.2	308.2	308.2	308.2	308.2	308.2	306.9	305.7	304.7	305.3	307.0	306.4	306.7
43	***	***	2.024	307.2	308.2	307.2	307.2	307.2	307.2	305.9	304.8	303.7	304.5	306.3	305.4	305.7
48	***	***	2.022	307.2	307.2	307.2	307.2	306.2	307.2	305.5	304.4	303.0	304.7	305.7	304.8	305.3
53	***	***	2.021	307.2	307.2	307.2	306.2	306.2	306.2	305.3	303.7	302.9	304.4	304.8	304.8	304.9
58	***	***	2.019	306.2	307.2	306.2	306.2	306.2	306.2	305.0	303.5	302.8	304.2	304.5	304.5	304.9
63	***	***	2.015	306.2	306.2	306.2	306.2	305.2	306.2	304.9	303.4	302.5	304.4	304.5	304.4	304.8
68	***	***	2.013	306.2	306.2	306.2	306.2	305.2	305.2	304.4	303.3	302.5	303.6	304.5	303.9	304.2
73	***	***	2.011	305.2	306.2	306.2	306.2	305.2	305.2	304.1	303.2	302.3	303.7	304.2	303.7	303.9
83	***	***	2.009	305.2	306.2	305.2	305.2	305.2	305.2	303.9	302.6	301.8	303.5	303.5	303.4	303.6
93	***	***	2.006	305.2	305.2	305.2	305.2	305.2	305.2	303.5	302.0	301.7	303.0	303.2	303.3	303.4
103	***	***	2.004	305.2	305.2	305.2	305.2	304.2	304.2	303.2	302.1	301.4	302.7	303.1	302.9	303.0
113	***	***	2.002	304.2	305.2	305.2	305.2	304.2	304.2	303.0	301.7	301.1	302.5	302.9	302.5	302.7
123	***	***	2.000	304.2	305.2	305.2	304.2	304.2	304.2	302.8	301.5	301.0	302.5	302.6	302.4	302.5
133	***	***	1.998	304.2	305.2	305.2	304.2	304.2	304.2	302.8	301.3	301.0	302.2	302.4	302.4	302.5
143	***	***	1.996	304.2	305.2	305.2	304.2	304.2	304.2	302.6	301.2	300.8	302.2	302.2	302.2	302.3
153	***	***	1.995	304.2	305.2	305.2	304.2	304.2	304.2	302.4	301.0	300.6	302.0	302.3	302.0	302.0
163	***	***	1.994	304.2	305.2	305.2	304.2	303.2	303.2	302.3	301.0	300.5	302.0	302.0	302.0	302.0
173	***	***	1.992	304.2	305.2	305.2	304.2	303.2	303.2	302.2	300.8	300.5	301.9	302.0	301.9	301.9
183	***	***	1.991	304.2	305.2	305.2	304.2	303.2	303.2	301.9	300.8	300.3	302.0	301.8	301.6	301.7

COORDINATES

I	R (M)	THETA (DEG)	Z (M)
1	0.0	***	-0.152
2	0.0	***	-0.076
3	0.0	***	0.0
4	0.0	***	0.076
5	0.0	***	0.152
6	0.0	***	0.229
7	0.0	***	0.530
8	0.0	***	0.610
9	0.0	***	0.686
10	0.0	***	0.762
11	0.0	***	0.838
12	0.0	***	0.914
13	0.0	***	0.991

Table 10B — Inferred Pressurant Distribution, Scaling Run 31, Test Configuration 1: One 2.54-cm Nozzle [(J) indicates thermocouple on an inlet jet centerline]

t (s)	$\bar{T}$ (°C)	$\bar{T}_c$ (°C)	$\bar{T}_p$ (°C)	β	β/θ	$\bar{X}$	1	2	3(J)	4	5	6	7	8	9	10	11	12	13
						Pressurant Fractions (X) at Locations I													
COMMENCE VALVE OPENING																			
0.0	26.9	26.9	133.6	-.1	0.0000	0.000	0.000	0.000	0.000	0.000	0.000	0.000	0.000	0.000	0.000	0.000	0.000	0.000	
1.0	27.0	27.0	28.7	19260.2	-7.0243	-.000	-.070	-.070	-.070	-.070	-.070	-.070	-.070	.290	.230	-.130	.170	.110	-.189
VALVE FULLY OPEN																			
2.0	30.0	30.0	29.8	129.7	10.2452	.076	-4.509	3.333	13.789	5.947	3.333	3.333	-1.372	-6.600	-3.463	-5.554	-5.032	-.849	-1.372
3.0	33.6	34.2	30.3	32.3	2.5881	.147	-.429	.340	1.878	.084	.084	.084	-.147	-.147	.058	-.096	.007	.135	.058
4.0	35.7	37.3	29.4	20.5	1.4267	.204	-.072	.434	1.065	.055	.181	.181	.093	.042	.168	.093	.093	.181	.143
5.0	37.4	39.9	29.8	15.8	.9210	.249	.004	.450	.896	.153	.153	.202	.153	.163	.232	.192	.192	.222	.232
6.0	38.6	41.9	30.4	14.9	.8135	.289	.087	.434	.869	.173	.173	.260	.217	.243	.269	.252	.243	.269	.269
7.0	39.1	43.0	30.7	15.6	.7749	.324	.175	.501	.907	.175	.216	.257	.249	.281	.289	.265	.289	.305	.297
8.0	39.3	43.8	31.0	15.9	.7229	.354	.229	.542	.934	.229	.229	.229	.276	.292	.323	.307	.315	.347	.347
9.0	39.6	44.6	31.4	15.1	.6372	.380	.280	.507	.962	.280	.280	.280	.302	.333	.317	.340	.348	.363	.355
10.0	39.6	45.0	31.6	15.6	.5923	.404	.307	.569	.906	.345	.307	.307	.330	.330	.367	.352	.352	.382	.390
11.0	39.6	45.3	31.9	15.6	.5525	.424	.331	.627	.924	.331	.331	.331	.331	.375	.360	.368	.398	.412	.398
COMMENCE VALVE CLOSURE																			
12.0	39.4	45.3	32.0	17.3	.5833	.443	.329	.705	.968	.329	.329	.329	.359	.374	.397	.412	.397	.412	.427
13.0	39.3	45.4	32.2	-1248.8	.4803	.460	.343	.644	1.020	.418	.343	.343	.358	.396	.403	.418	.433	.433	.426
VALVE FULLY CLOSED																			
14.0	39.3	45.5	32.3	-974.6	.3749	.472	.349	.652	1.029	.425	.349	.349	.387	.402	.417	.440	.433	.448	.455
15.0	39.9	46.3	32.6	311.8	-.1199	.472	.401	.584	.912	.474	.401	.401	.379	.409	.423	.452	.409	.430	.460
16.0	39.1	45.3	32.2	-392.0	.1508	.472	.457	.534	.762	.457	.457	.457	.412	.427	.419	.442	.427	.442	.442
17.0	38.5	44.5	31.8	-331.6	.1275	.472	.443	.523	.681	.443	.443	.443	.443	.451	.451	.451	.436	.475	.451
18.0	38.3	44.3	31.7	-85.7	.0330	.472	.404	.564	.644	.484	.484	.484	.412	.412	.436	.460	.420	.452	.476
19.0	38.0	43.8	31.6	-174.7	.0672	.472	.463	.545	.626	.463	.463	.463	.406	.439	.423	.455	.447	.463	.480
20.0	37.7	43.4	31.4	-179.5	.0691	.472	.447	.530	.613	.447	.447	.447	.430	.422	.455	.480	.439	.489	.489
21.0	37.6	43.2	31.3	-91.7	.0353	.472	.436	.520	.604	.436	.436	.436	.419	.453	.444	.503	.469	.486	.495
22.0	37.3	42.8	31.1	-187.4	.0721	.472	.481	.524	.567	.481	.481	.438	.421	.404	.447	.490	.430	.481	.490
23.0	37.0	42.4	31.0	-192.8	.0742	.472	.457	.544	.632	.457	.457	.457	.404	.422	.448	.474	.457	.474	.457
24.0	37.0	42.4	31.0	0.0	0.0000	.472	.488	.532	.620	.444	.444	.444	.409	.401	.444	.514	.427	.479	.488
25.0	36.5	41.7	30.7	-300.5	.1156	.472	.501	.501	.592	.501	.501	.411	.411	.393	.465	.483	.411	.483	.483
26.0	36.5	41.7	30.7	0.0	0.0000	.472	.494	.494	.584	.494	.494	.403	.412	.421	.466	.485	.448	.476	.466
27.0	36.5	41.7	30.7	0.0	0.0000	.472	.478	.478	.569	.478	.478	.478	.406	.433	.442	.515	.442	.469	.469
28.0	36.2	41.3	30.5	-208.4	.0801	.472	.458	.551	.551	.458	.458	.458	.431	.403	.468	.523	.412	.486	.477
29.0	36.1	41.1	30.4	-106.7	.0410	.472	.535	.535	.535	.441	.441	.441	.422	.413	.488	.507	.432	.488	.460
30.0	36.1	41.1	30.4	0.0	0.0000	.472	.513	.513	.513	.513	.513	.419	.401	.438	.466	.494	.438	.466	.448
31.0	36.1	41.1	30.4	0.0	0.0000	.472	.503	.503	.503	.503	.503	.409	.419	.437	.466	.531	.428	.466	.466
32.0	35.9	40.9	30.4	-108.6	.0417	.472	.480	.480	.575	.480	.480	.433	.423	.414	.471	.547	.414	.471	.471
33.0	35.6	40.5	30.2	-222.6	.0856	.472	.465	.465	.563	.465	.465	.465	.426	.407	.494	.553	.407	.494	.465
34.0	35.5	40.3	30.1	-114.2	.0439	.472	.547	.449	.547	.449	.449	.449	.409	.429	.508	.547	.429	.478	.449

***

Table 11A — Scaling Run 32, Test Configuration 2: Two 2.54-cm Nozzles
[(J) indicates thermocouples on an inlet jet centerline]

t (s)	Press Tank P (atm)	T_t (K)	Chamber P (atm)	Chamber Absolute Temperatures (K) at Locations 1												
				1	2	3(J)	4	5	6	7	8	9	10	11	12	13
-5	***	***	.996	292.2	292.2	292.2	292.2	292.2	292.2	291.1	290.2	289.9	291.0	291.0	291.0	290.9
-4	***	***	.996	292.2	292.2	292.2	292.2	292.2	292.2	291.1	290.2	289.9	291.0	291.0	291.0	291.0
-3	***	***	.996	292.2	292.2	292.2	292.2	292.2	292.2	291.1	290.2	290.0	291.0	291.0	291.0	291.0
-2	***	***	.996	292.2	292.2	292.2	292.2	292.2	292.2	291.1	290.2	290.0	291.0	291.1	291.0	291.0
-1	***	***	.996	292.2	292.2	292.2	292.2	292.2	292.2	291.1	290.2	290.0	291.0	291.1	290.9	291.0
0	6.308	293.2	.996	292.2	292.2	292.2	292.2	292.2	292.2	291.1	290.2	290.0	291.0	291.0	291.0	291.0
1	6.296	293.2	.996	292.2	292.2	292.2	292.2	292.2	292.2	291.1	290.2	289.9	291.0	291.1	291.0	291.0
2	6.019	288.2	1.101	295.2	294.2	292.2	294.2	294.7	294.7	294.3	295.5	294.2	295.5	295.2	294.2	294.0
3	5.488	272.2	1.310	304.2	300.2	292.2	301.2	302.2	302.2	301.6	301.8	299.6	301.4	301.3	300.5	300.9
4	4.997	270.2	1.494	308.2	303.7	296.7	306.7	307.2	306.2	305.8	304.9	302.9	304.6	304.3	304.0	304.4
5	4.502	267.2	1.661	310.2	305.2	298.2	309.2	309.2	309.2	307.6	306.7	305.2	306.8	306.6	305.9	306.4
6	4.128	266.2	1.800	310.2	305.2	298.2	309.2	310.2	309.2	308.8	307.6	306.5	307.7	307.5	307.3	307.7
7	3.806	265.2	1.944	310.2	305.7	299.2	310.2	310.2	310.2	309.2	308.3	307.3	308.2	308.1	307.9	308.4
8	3.484	264.2	2.063	310.2	305.2	298.2	310.2	310.2	310.2	309.3	308.9	307.5	308.6	308.2	308.3	308.6
9	3.368	265.2	2.124	309.7	305.7	299.7	309.7	309.7	309.7	308.9	307.3	306.8	307.9	307.8	308.1	308.0
10	3.338	268.2	2.118	309.2	306.2	303.2	309.2	309.2	309.2	308.0	306.7	306.4	307.0	307.1	307.0	307.2
11	***	***	2.110	308.2	306.2	303.7	308.2	308.2	308.2	307.3	306.2	305.8	306.5	306.6	306.6	306.6
12	***	***	2.106	308.2	306.2	304.2	308.2	307.2	308.2	306.8	305.9	305.4	305.9	306.2	306.0	306.2
13	***	***	2.102	307.2	306.2	303.2	307.2	307.2	307.2	306.5	305.2	304.9	305.3	305.9	305.8	305.8
14	***	***	2.100	306.2	305.2	303.2	306.7	306.7	307.2	305.9	304.8	304.4	305.0	305.5	305.3	305.5
15	***	***	2.098	306.2	305.2	303.2	306.2	306.2	306.2	305.3	304.5	303.9	304.4	305.1	304.9	305.1
16	***	***	2.095	306.2	305.2	303.2	305.7	305.2	306.2	305.0	304.0	303.3	303.8	304.8	304.5	304.8
17	***	***	2.093	305.2	305.2	303.2	305.2	305.2	305.2	304.5	303.6	302.8	303.1	304.5	304.1	304.4
18	***	***	2.091	305.2	304.2	303.2	305.2	305.2	305.2	304.5	303.3	302.4	302.9	304.2	303.9	304.2
23	***	***	2.084	303.2	303.2	302.2	303.2	303.2	303.7	302.7	301.5	300.5	301.0	302.7	302.2	302.5
28	***	***	2.078	302.2	302.2	301.2	302.2	301.7	302.2	301.3	300.6	299.3	299.5	301.6	301.0	301.6
33	***	***	2.072	301.2	301.2	301.2	301.2	301.2	301.7	300.3	299.5	298.1	298.4	300.2	299.8	300.6
38	***	***	2.068	301.2	301.2	300.2	300.2	300.2	301.2	299.7	298.8	297.8	298.2	299.5	299.1	299.4
43	***	***	2.064	300.2	300.2	300.2	300.2	300.2	300.2	299.1	298.2	297.3	297.8	298.8	298.1	298.2
48	***	***	2.060	300.2	300.2	299.2	299.2	299.2	300.2	298.5	297.5	296.7	297.2	298.0	297.4	297.7
53	***	***	2.057	299.2	299.2	299.2	299.2	299.2	299.2	298.1	297.0	296.0	296.6	297.3	297.1	297.2
58	***	***	2.054	298.2	298.2	298.2	298.2	298.2	298.2	297.5	296.6	295.7	296.5	297.0	296.7	296.9
63	***	***	2.051	298.2	298.2	298.2	298.2	298.2	298.2	297.1	296.2	295.5	296.3	296.8	296.4	296.6
68	***	***	2.049	297.2	298.2	298.2	298.2	297.2	298.2	297.0	296.1	295.2	295.9	296.5	295.9	296.1
78	***	***	2.045	297.2	297.2	297.2	297.2	297.2	297.2	296.2	295.2	294.7	295.5	295.7	295.4	295.4
88	***	***	2.040	296.2	297.2	297.2	296.2	296.2	297.2	295.5	294.7	294.2	295.0	295.3	295.0	295.1
98	***	***	2.038	296.2	296.2	296.2	296.2	296.2	296.2	295.0	294.2	293.8	294.6	294.9	294.6	294.6
108	***	***	2.035	296.2	296.2	296.2	296.2	296.2	296.2	294.8	293.9	293.5	294.2	294.5	294.4	294.5
118	***	***	2.032	295.2	296.2	296.2	296.2	295.2	296.2	294.5	293.7	293.4	294.1	294.4	294.2	294.2
128	***	***	2.030	295.2	296.2	295.2	295.2	295.2	295.2	294.3	293.4	293.2	293.9	294.2	294.0	293.9
138	***	***	2.028	295.2	296.2	295.2	295.2	295.2	295.2	294.0	293.2	293.1	293.8	293.9	293.8	293.9
148	***	***	2.026	295.2	295.2	295.2	295.2	295.2	295.2	293.8	293.1	292.9	293.8	293.8	293.8	293.7
158	***	***	2.024	295.2	295.2	295.2	295.2	295.2	295.2	293.7	292.9	292.8	293.7	293.8	293.6	293.5
168	***	***	2.023	295.2	295.2	295.2	295.2	294.2	294.7	293.5	292.8	292.5	293.5	293.5	293.4	293.4
178	***	***	2.021	294.7	295.2	295.2	295.2	294.2	294.2	293.5	292.6	292.4	293.3	293.4	293.3	293.3
188	***	***	2.020	294.2	295.2	295.2	295.2	294.2	294.2	293.4	292.5	292.4	293.3	293.2	293.2	293.1

I	COORDINATES R (M)	THETA (DEG)	Z (M)
1	0.0	***	-0.152
2	0.0	***	-0.076
3	0.0	***	0.0
4	0.0	***	0.076
5	0.0	***	0.152
6	0.0	***	0.229
7	0.0	***	0.530
8	0.0	***	0.610
9	0.0	***	0.686
10	0.0	***	0.762
11	0.0	***	0.838
12	0.0	***	0.914
13	0.0	***	0.991

Table 11B — Inferred Pressurant Distribution, Scaling Run 32, Test Configuration 2: Two 2.54-cm Nozzles [(J) indicates thermocouples on an inlet jet centerline]

t (s)	$\bar{T}$ (°C)	$\bar{T}_s$ (°C)	$\bar{T}_p$ (°C)	β	β/θ	$\bar{X}$	Pressurant Fractions (X) at Locations I: 1	2	3(J)	4	5	6	7	8	9	10	11	12	13
COMMENCE VALVE OPENING																			
0.0	18.2	18.2	142.7	.0	0.0000	0.000	0.000	0.000	0.000	0.000	0.000	0.000	0.000	0.000	0.000	0.000	0.000	0.000	
1.0	18.2	18.2	20.0	46.0	.0024	-.009	-.000	-.000	-.000	-.000	-.000	-.000	-.000	-.000	-.114	-.000	-.000	-.000	-.000
VALVE FULLY OPEN																			
2.0	21.3	21.3	20.5	131.9	11.8392	.086	.133	1.347	3.776	1.347	.740	.740	-.110	-2.782	-1.203	-1.689	-1.203	-.110	.133
3.0	27.5	29.5	20.5	21.8	3.3314	.215	-.087	.357	1.246	.246	.135	.135	.080	-.043	.191	.091	.113	.191	.146
4.0	31.4	36.1	20.6	9.9	1.1728	.303	.119	.409	.861	.216	.184	.248	.203	.203	.326	.274	.306	.306	.287
5.0	33.4	40.5	21.4	8.8	.8700	.369	.223	.484	.849	.276	.276	.276	.302	.302	.375	.338	.354	.385	.359
6.0	34.1	43.0	21.9	9.3	.7708	.419	.319	.556	.889	.367	.319	.367	.333	.348	.395	.381	.395	.400	.381
COMMENCE VALVE CLOSURE																			
7.0	34.7	45.0	22.6	8.6	.6083	.459	.392	.592	.881	.392	.392	.392	.387	.387	.427	.427	.436	.441	.418
8.0	34.7	46.0	22.9	10782.1	.5704	.490	.423	.640	.943	.423	.423	.423	.415	.432	.449	.441	.462	.454	.441
VALVE FULLY CLOSED																			
9.0	34.4	46.0	23.0	6293.6	.3329	.505	.447	.622	.883	.447	.447	.447	.434	.465	.482	.474	.482	.465	.469
10.0	33.1	44.0	22.4	3967.7	.2099	.505	.435	.594	.733	.455	.455	.455	.459	.478	.487	.501	.501	.501	.492
11.0	32.4	42.9	22.1	2358.3	.1248	.505	.474	.570	.690	.474	.474	.474	.464	.474	.488	.498	.498	.493	.493
12.0	31.8	42.0	21.8	1975.7	.1045	.505	.459	.558	.657	.459	.508	.459	.474	.474	.494	.513	.504	.508	.499
13.0	31.2	41.1	21.5	2061.3	.1090	.505	.481	.532	.685	.481	.481	.481	.461	.481	.491	.517	.491	.491	.491
14.0	30.9	40.7	21.4	1065.7	.0564	.505	.509	.561	.664	.483	.483	.457	.467	.477	.493	.509	.488	.493	.483
15.0	30.6	40.2	21.3	1090.3	.0577	.505	.488	.540	.646	.488	.488	.488	.477	.472	.498	.519	.488	.493	.482
16.0	30.2	39.5	21.1	1684.3	.0891	.505	.468	.523	.631	.495	.523	.468	.474	.479	.512	.533	.485	.495	.479
17.0	29.9	39.1	20.9	1156.8	.0612	.505	.499	.499	.609	.499	.499	.499	.477	.477	.515	.548	.477	.493	.477
18.0	29.6	38.6	20.8	1186.1	.0627	.505	.487	.543	.600	.487	.487	.487	.465	.482	.527	.549	.482	.493	.476
19.0	29.5	38.4	20.8	603.9	.0319	.505	.474	.531	.587	.474	.502	.474	.474	.485	.525	.565	.485	.502	.485
20.0	29.3	38.2	20.7	612.2	.0324	.505	.456	.513	.571	.513	.513	.456	.468	.491	.542	.571	.485	.508	.479
21.0	29.1	37.7	20.6	1249.0	.0661	.505	.480	.538	.597	.509	.509	.480	.457	.474	.532	.550	.474	.497	.468
22.0	28.9	37.5	20.5	637.0	.0337	.505	.468	.527	.586	.527	.527	.468	.462	.474	.533	.563	.468	.498	.462
23.0	28.6	37.0	20.4	1299.7	.0688	.505	.506	.506	.567	.506	.506	.476	.470	.482	.542	.567	.470	.494	.470
24.0	28.5	36.8	20.3	664.1	.0351	.505	.494	.494	.555	.494	.494	.494	.476	.482	.561	.579	.470	.500	.476
25.0	28.2	36.3	20.2	1356.5	.0718	.505	.478	.540	.540	.478	.540	.478	.472	.478	.553	.584	.460	.497	.466
26.0	28.0	36.1	20.1	693.0	.0367	.505	.520	.520	.520	.520	.520	.489	.464	.477	.546	.564	.464	.495	.464
27.0	27.9	35.9	20.1	703.1	.0372	.505	.505	.505	.568	.505	.505	.505	.473	.473	.543	.574	.460	.492	.460
28.0	27.8	35.6	20.0	713.7	.0378	.505	.495	.495	.559	.495	.527	.495	.482	.469	.546	.591	.463	.495	.456
29.0	27.6	35.4	20.0	724.9	.0383	.505	.478	.478	.542	.542	.542	.478	.478	.478	.549	.588	.471	.484	.458
30.0	27.5	35.2	19.9	736.2	.0389	.505	.496	.496	.529	.529	.529	.464	.477	.477	.549	.601	.477	.490	.451
31.0	27.2	34.7	19.8	1508.0	.0798	.505	.516	.516	.516	.516	.516	.449	.476	.482	.556	.603	.476	.489	.456
32.0	27.0	34.5	19.7	771.7	.0408	.505	.507	.507	.507	.507	.507	.439	.480	.487	.568	.602	.487	.500	.466
33.0	26.9	34.2	19.7	785.5	.0416	.505	.499	.499	.499	.499	.499	.465	.486	.479	.568	.609	.492	.513	.458
34.0	26.7	34.0	19.6	798.1	.0422	.505	.491	.491	.491	.491	.491	.491	.484	.484	.561	.588	.498	.526	.477

Table 12A — Scaling Run 33, Test Configuration 2: Two 2.54-cm Nozzles
[(J) indicates thermocouples on an inlet jet centerline]

t (s)	Press Tank P (atm)	T_t (K)	Chamber P (atm)	Chamber Absolute Temperatures (K) at Locations I: 1	2	3(J)	4	5	6	7	8	9	10	11	12	13
-5	***	***	.996	292.2	292.2	291.2	292.2	292.2	292.2	290.7	289.7	289.5	290.5	290.6	290.4	290.4
-4	***	***	.997	292.2	292.2	291.7	292.2	292.2	292.2	290.8	289.7	289.5	290.4	290.7	290.4	290.4
-3	***	***	.996	292.2	292.2	292.2	292.2	292.2	292.2	290.8	289.8	289.5	290.5	290.7	290.4	290.5
-2	***	***	.996	292.2	292.2	291.2	292.2	292.2	292.2	290.7	289.8	289.5	290.5	290.6	290.4	290.4
-1	***	***	.996	292.2	292.2	291.2	292.2	292.2	292.2	290.7	289.7	289.5	290.5	290.6	290.4	290.3
0	6.343	292.2	.997	292.2	292.2	292.2	292.2	292.2	292.2	290.7	289.7	289.5	290.6	290.6	290.4	290.2
1	6.103	295.2	1.064	293.7	293.2	293.7	292.7	293.2	293.7	292.9	294.5	292.5	293.5	293.5	292.7	292.4
2	5.628	273.2	1.265	302.2	298.2	290.2	299.2	300.2	300.2	300.8	300.9	298.7	300.4	299.5	298.7	299.2
3	5.097	270.2	1.460	307.2	303.2	295.7	305.7	305.7	305.2	305.0	304.4	302.7	304.3	303.9	303.9	304.0
4	4.629	267.2	1.624	309.2	305.2	298.2	308.2	309.2	308.2	307.4	306.2	304.6	305.9	306.1	305.9	306.3
5	4.266	265.7	1.778	310.2	305.2	298.2	309.2	309.2	309.2	308.2	307.2	305.9	307.4	307.0	306.9	307.1
6	3.877	265.2	1.913	310.2	305.2	298.2	310.2	310.2	310.2	308.8	307.8	306.6	308.1	307.1	307.7	307.9
7	3.552	264.2	2.036	310.2	305.2	299.2	310.2	310.2	310.2	309.0	307.9	306.9	308.2	308.2	307.9	308.1
8	3.287	263.7	2.146	310.2	304.7	298.2	309.7	310.2	310.2	308.8	307.8	307.0	308.2	308.2	308.1	308.2
9	3.130	265.2	2.200	309.2	305.2	298.2	309.2	309.2	309.2	308.5	307.0	306.7	307.8	307.7	307.5	307.5
10	3.133	273.7	2.194	308.2	306.2	302.7	308.7	308.7	308.7	307.8	306.6	306.1	307.1	307.0	306.8	306.9
11	***	***	2.189	308.2	306.2	303.2	308.2	307.2	308.2	307.3	306.1	305.5	306.3	306.5	306.4	306.5
12	***	***	2.184	307.2	305.2	303.2	307.2	307.2	307.2	306.2	305.2	304.9	305.7	306.2	305.9	306.0
13	***	***	2.180	306.2	305.2	303.2	306.2	306.2	307.2	305.8	304.6	304.2	305.2	305.8	305.5	305.7
14	***	***	2.178	306.2	305.2	302.2	306.2	306.2	306.2	305.4	304.3	303.8	304.5	305.2	305.0	305.3
15	***	***	2.176	306.2	304.2	302.2	305.7	305.7	306.2	305.0	303.9	303.4	304.1	304.7	304.6	305.1
16	***	***	2.173	305.2	304.2	302.2	305.2	305.2	305.2	304.7	303.5	303.0	303.7	304.5	304.2	304.7
17	***	***	2.172	305.2	304.2	303.2	305.2	305.2	305.2	304.5	303.1	302.5	303.1	304.0	303.8	304.2
18	***	***	2.170	305.2	304.2	303.2	304.2	304.2	305.2	304.0	302.9	302.2	302.7	303.9	303.5	303.8
23	***	***	2.162	303.2	303.2	302.2	303.2	303.2	303.2	302.6	301.7	300.4	300.9	302.2	301.3	301.8
28	***	***	2.156	302.2	301.2	301.2	302.2	302.2	302.2	301.1	300.3	299.0	299.2	300.9	300.0	300.3
33	***	***	2.151	300.2	300.2	300.2	300.2	301.2	301.2	300.1	299.4	298.0	298.4	300.0	299.4	299.5
38	***	***	2.146	300.2	300.2	299.2	300.2	300.2	300.2	299.4	298.6	297.6	297.7	299.1	298.7	298.8
43	***	***	2.142	299.2	299.2	299.2	299.2	299.2	299.7	298.7	298.0	296.9	297.4	298.8	298.1	298.3
48	***	***	2.138	299.2	299.2	298.7	298.2	298.2	299.2	298.0	297.4	296.4	296.8	298.0	297.5	297.7
53	***	***	2.135	299.2	299.2	298.2	298.2	298.2	298.2	297.6	296.8	296.0	296.5	297.4	296.9	297.4
58	***	***	2.132	298.2	298.2	298.2	298.2	298.2	298.2	297.0	296.3	295.5	296.0	296.9	296.3	296.7
63	***	***	2.129	298.2	298.2	298.2	298.2	297.2	298.2	296.6	295.9	295.0	295.5	296.5	295.9	296.3
68	***	***	2.127	297.2	298.2	297.2	297.2	297.2	297.2	296.3	295.4	294.7	295.4	296.2	295.5	296.0
78	***	***	2.123	297.2	297.2	297.2	297.2	297.2	297.2	295.6	294.8	294.1	294.8	295.5	295.2	295.4
88	***	***	2.119	296.2	297.2	296.2	296.2	296.2	296.2	295.2	294.4	293.7	294.5	295.2	294.8	295.0
98	***	***	2.115	296.2	296.2	296.2	296.2	296.2	296.2	294.8	294.0	293.3	294.2	294.7	294.5	294.6
108	***	***	2.112	296.2	296.2	296.2	296.2	295.2	296.2	294.5	293.8	293.2	294.0	294.4	294.2	294.3
118	***	***	2.110	295.2	296.2	296.2	296.2	295.2	295.2	294.2	293.3	293.1	293.9	294.1	294.0	294.1
128	***	***	2.108	295.2	296.2	296.2	296.2	295.2	295.2	293.9	293.2	292.8	293.5	293.9	293.8	293.8
138	***	***	2.106	295.2	295.2	295.2	295.2	295.2	295.2	293.8	293.1	292.7	293.5	293.7	293.6	293.6
148	***	***	2.104	295.2	295.2	295.2	295.2	295.2	295.2	293.8	292.9	292.5	293.3	293.6	293.5	293.5
158	***	***	2.103	295.2	295.2	295.2	295.2	294.2	294.2	293.6	292.8	292.5	293.3	293.4	293.3	293.3
168	***	***	2.101	294.2	295.2	295.2	295.2	294.2	294.2	293.3	292.6	292.4	293.2	293.3	293.2	293.2
178	***	***	2.100	294.2	295.2	295.2	295.2	294.2	294.2	293.3	292.5	292.4	293.1	293.2	293.2	293.1
188	***	***	2.097	294.2	295.2	295.2	295.2	294.2	294.2	293.2	292.4	292.3	293.1	293.1	293.1	293.0

COORDINATES

I	R (M)	THETA (DEG)	Z (M)
1	0.0	***	-0.152
2	0.0	***	-0.076
3	0.0	***	0.0
4	0.0	***	0.076
5	0.0	***	0.152
6	0.0	***	0.229
7	0.0	***	0.330
8	0.0	***	0.610
9	0.0	***	0.686
10	0.0	***	0.762
11	0.0	***	0.838
12	0.0	***	0.914
13	0.0	***	0.991

Table 12B — Inferred Pressurant Distribution, Scaling Run 33, Test Configuration 2: Two 2.54-cm Nozzles [(J) indicates thermocouples on an inlet jet centerline]

t (s)	$\bar{T}$ (°C)	$\bar{T}_v$ (°C)	$\bar{T}_p$ (°C)	β	β/θ	$\bar{X}$	Pressurant Fractions (X) at Locations I: 1	2	3(J)	4	5	6	7	8	9	10	11	12	13
COMMENCE VALVE OPENING																			
0.0	17.9	17.9	52.8	3.1	0.0000	0.000	0.000	0.000	0.000	0.000	0.000	0.000	0.000	0.000	0.000	0.000	0.000	0.000	
1.0	20.1	20.0	20.5	194.7	11.2493	.056	-1.268	-2.344	-1.268	-3.420	-2.344	-1.268	.238	6.049	1.960	1.960	1.745	.454	.238
VALVE FULLY OPEN																			
2.0	25.9	27.0	21.1	31.5	4.8194	.190	-.152	.520	1.865	.352	.184	.184	-.169	-.354	-.018	-.119	.033	.133	.016
3.0	30.7	34.9	20.5	9.9	1.2580	.287	.133	.411	.932	.237	.237	.272	.181	.154	.258	.223	.251	.237	.209
4.0	33.0	39.6	21.0	8.6	.8547	.354	.250	.465	.842	.303	.250	.303	.266	.277	.352	.341	.330	.330	.298
5.0	33.8	42.3	21.4	9.3	.8173	.409	.306	.545	.880	.353	.353	.353	.330	.330	.382	.363	.382	.377	.358
6.0	34.4	44.4	22.0	8.8	.6245	.449	.378	.602	.915	.378	.378	.378	.374	.374	.418	.401	.445	.410	.392
COMMENCE VALVE CLOSURE																			
7.0	34.6	45.8	22.6	8.9	.5478	.482	.424	.639	.898	.424	.424	.424	.411	.416	.450	.442	.442	.446	.429
8.0	34.5	46.4	22.9	8.7	.5167	.509	.446	.679	.955	.467	.446	.446	.441	.441	.467	.463	.463	.458	.446
VALVE FULLY CLOSED																			
9.0	33.9	46.0	22.9	5.6	.3357	.522	.478	.651	.954	.478	.478	.478	.444	.465	.474	.470	.474	.474	.465
10.0	33.1	44.7	22.5	2.3	.1345	.522	.517	.607	.765	.495	.495	.495	.468	.477	.490	.495	.499	.499	.486
11.0	32.4	43.6	22.1	2.0	.1178	.522	.496	.590	.729	.496	.543	.496	.469	.478	.496	.510	.501	.496	.483
12.0	31.7	42.5	21.8	2.1	.1237	.522	.512	.609	.705	.512	.512	.512	.488	.488	.493	.507	.483	.488	.474
13.0	31.1	41.6	21.5	1.7	.1036	.522	.538	.587	.687	.538	.538	.488	.483	.493	.503	.508	.478	.483	.463
14.0	30.9	41.2	21.4	.9	.0534	.522	.517	.568	.719	.517	.517	.517	.482	.487	.502	.522	.487	.487	.462
15.0	30.6	40.8	21.3	.9	.0546	.522	.499	.601	.704	.524	.524	.499	.483	.488	.504	.524	.493	.488	.452
16.0	30.2	40.1	21.1	1.4	.0842	.522	.529	.582	.687	.529	.529	.529	.477	.482	.503	.524	.477	.487	.450
17.0	30.0	39.9	21.0	.5	.0287	.522	.520	.573	.626	.520	.520	.520	.477	.499	.520	.546	.499	.499	.467
18.0	29.8	39.4	20.9	1.0	.0584	.522	.502	.556	.610	.556	.556	.502	.486	.492	.519	.551	.486	.497	.470
19.0	29.5	39.0	20.8	1.0	.0598	.522	.542	.542	.597	.542	.542	.487	.482	.493	.531	.553	.493	.504	.476
20.0	29.2	38.5	20.6	1.0	.0613	.522	.520	.548	.632	.520	.520	.520	.481	.481	.526	.559	.487	.509	.481
21.0	29.1	38.3	20.6	.5	.0312	.522	.509	.566	.622	.509	.509	.509	.475	.481	.526	.566	.498	.521	.492
22.0	28.9	38.1	20.5	.5	.0316	.522	.516	.544	.601	.544	.544	.487	.476	.482	.521	.567	.487	.527	.487
23.0	28.6	37.6	20.4	1.1	.0645	.522	.527	.527	.585	.527	.527	.527	.475	.469	.533	.568	.492	.533	.492
24.0	28.5	37.4	20.3	.6	.0329	.522	.556	.556	.585	.556	.556	.497	.456	.456	.515	.573	.474	.521	.485
25.0	28.4	37.2	20.3	.6	.0333	.522	.542	.542	.602	.542	.542	.483	.460	.471	.519	.578	.489	.531	.483
26.0	28.1	36.7	20.1	1.1	.0680	.522	.534	.534	.594	.534	.534	.474	.474	.468	.534	.588	.498	.528	.492
27.0	27.9	36.5	20.1	.6	.0347	.522	.519	.519	.580	.519	.519	.519	.482	.470	.537	.598	.494	.531	.500
28.0	27.8	36.3	20.0	.6	.0352	.522	.508	.569	.569	.508	.508	.508	.483	.477	.538	.594	.489	.526	.508
29.0	27.7	36.1	20.0	.6	.0357	.522	.552	.552	.552	.552	.521	.490	.477	.471	.533	.583	.484	.521	.496
30.0	27.5	35.8	19.9	.6	.0362	.522	.545	.545	.545	.545	.545	.482	.482	.476	.538	.589	.482	.526	.488
31.0	27.4	35.6	19.8	.6	.0367	.522	.531	.531	.594	.531	.531	.499	.486	.480	.537	.575	.486	.518	.486
32.0	27.2	35.4	19.8	.6	.0373	.522	.520	.520	.584	.584	.520	.520	.488	.469	.526	.578	.481	.514	.481
33.0	27.1	35.1	19.7	.6	.0378	.522	.568	.568	.568	.568	.503	.503	.477	.458	.529	.581	.477	.503	.483
34.0	26.8	34.7	19.6	1.3	.0774	.522	.555	.555	.555	.555	.526	.493	.473	.466	.533	.575	.486	.513	.480

Table 13A — Scaling Run 34, Test Configuration 2: Two 2.54-cm Nozzles
[(J) indicates thermocouples on an inlet jet centerline]

t (s)	Press Tank P (atm)	T_t (K)	Chamber P (atm)	Chamber Absolute Temperatures (K) at Locations I: 1	2	3(J)	4	5	6	7	8	9	10	11	12	13
-5	***	***	.998	292.2	292.2	291.2	291.2	292.2	292.2	290.7	289.7	289.4	290.3	290.5	290.3	290.3
-4	***	***	.998	292.2	292.2	291.2	291.2	291.2	292.2	290.6	289.6	289.3	290.3	290.6	290.3	290.3
-3	***	***	.998	292.2	292.2	291.2	291.2	291.2	291.7	290.6	289.7	289.4	290.2	290.6	290.3	290.3
-2	***	***	.998	292.2	292.2	291.2	291.2	292.2	292.2	290.6	289.6	289.4	290.3	290.4	290.2	290.3
-1	***	***	.998	292.2	292.2	291.2	291.2	292.2	292.2	290.6	289.7	289.4	290.4	290.4	290.3	290.2
0	6.132	292.2	.998	292.2	292.2	291.2	291.2	292.2	292.2	290.6	289.6	289.4	290.4	290.5	290.3	290.2
1	6.306	292.2	.998	292.2	292.2	291.2	291.2	292.2	292.2	290.6	289.9	289.5	290.4	290.6	290.3	290.2
2	5.925	285.2	1.148	295.7	295.2	291.2	294.7	295.2	295.2	296.7	297.2	296.0	297.5	296.7	296.0	295.0
3	5.343	271.2	1.353	304.2	300.2	293.2	302.2	303.2	302.2	303.5	302.5	300.8	303.8	302.0	300.8	301.0
4	4.917	269.2	1.533	308.2	303.7	296.7	306.7	307.2	306.2	306.1	304.5	303.4	304.6	304.4	303.8	304.0
5	4.466	267.2	1.692	310.2	305.2	298.2	308.2	309.2	308.2	307.3	306.7	305.2	306.8	306.6	305.9	305.9
6	4.039	266.2	1.837	310.2	305.2	298.2	309.2	309.2	309.2	308.3	307.1	306.1	307.6	307.0	306.9	306.9
7	3.716	264.7	1.969	310.2	305.7	298.7	309.2	309.7	309.2	308.7	307.5	306.6	307.9	307.9	307.4	307.7
8	3.422	264.2	2.085	310.2	305.2	298.2	309.2	310.2	309.2	315.8	307.6	306.8	307.9	307.9	307.7	307.8
9	3.248	264.2	2.161	309.2	305.2	298.2	308.7	309.7	309.2	308.3	306.9	306.4	307.3	307.5	307.1	307.3
10	3.220	267.2	2.152	308.2	306.2	302.2	308.2	308.2	308.2	307.4	306.0	305.8	306.5	306.6	306.5	306.5
11	***	***	2.146	308.2	306.2	303.2	308.2	308.2	308.2	306.4	305.4	305.0	305.8	306.1	305.8	306.2
12	***	***	2.142	307.2	305.7	302.7	307.2	306.7	307.2	306.0	305.0	304.7	305.1	305.5	305.4	305.5
13	***	***	2.138	307.2	305.2	302.2	306.2	306.2	306.2	305.7	304.5	304.0	304.8	305.2	304.8	305.1
14	***	***	2.135	306.7	305.2	302.7	306.2	306.2	306.2	305.3	304.1	303.5	303.9	304.5	304.4	304.8
15	***	***	2.133	306.2	305.2	303.2	306.2	306.2	306.2	304.9	303.6	303.1	303.1	304.4	303.9	304.4
16	***	***	2.131	306.2	305.2	303.2	305.2	305.2	306.2	304.9	303.3	302.5	302.5	303.8	303.4	304.0
17	***	***	2.129	305.2	304.2	303.2	305.2	305.2	305.2	304.2	303.0	301.9	301.8	303.6	303.1	303.6
18	***	***	2.127	305.2	304.2	302.2	305.2	304.2	305.2	303.9	302.5	301.5	301.7	303.3	302.7	303.4
23	***	***	2.120	304.2	303.2	302.2	303.2	303.2	304.2	301.5	300.3	299.5	299.5	301.7	300.9	301.8
28	***	***	2.113	302.2	302.2	300.7	301.7	301.7	302.2	300.0	299.2	298.1	299.0	300.9	300.2	300.9
33	***	***	2.108	301.2	301.2	300.2	300.2	300.2	301.2	299.3	298.5	297.7	298.5	300.0	299.5	300.0
38	***	***	2.103	300.2	300.2	299.2	299.2	299.2	300.2	298.7	297.9	297.1	297.7	298.9	298.8	299.2
43	***	***	2.099	299.2	300.2	299.2	299.2	299.2	299.2	298.0	297.2	296.5	297.3	298.6	298.0	298.4
48	***	***	2.096	299.2	299.2	299.2	299.2	298.2	299.2	297.4	296.7	296.0	296.7	297.9	297.5	297.8
53	***	***	2.092	298.2	299.2	298.2	298.2	298.2	298.2	296.8	295.9	295.2	296.2	297.3	296.8	297.1
58	***	***	2.089	298.2	298.2	298.2	298.2	298.2	298.2	296.7	295.7	294.8	295.8	297.0	296.5	296.8
63	***	***	2.087	298.2	298.2	298.2	298.2	297.2	298.2	296.2	295.2	294.6	295.4	296.7	296.2	296.4
68	***	***	2.084	297.2	298.2	297.2	297.2	297.2	297.2	295.9	294.9	294.4	295.3	296.0	295.7	295.9
78	***	***	2.080	297.2	297.2	297.2	297.2	296.2	296.7	295.4	294.5	293.9	294.7	295.5	295.2	295.2
88	***	***	2.077	296.2	297.2	297.2	296.2	296.2	296.2	295.2	294.3	293.8	294.4	295.2	294.8	294.8
98	***	***	2.073	296.2	296.2	296.2	296.2	296.2	296.2	294.8	293.9	293.4	294.2	294.6	294.4	294.5
108	***	***	2.070	296.2	296.2	296.2	296.2	295.2	295.2	294.5	293.6	293.1	294.1	294.3	294.1	294.2
118	***	***	2.068	295.2	296.2	296.2	296.2	295.2	295.2	294.2	293.3	292.8	293.8	294.1	293.8	293.8
128	***	***	2.066	295.2	296.2	295.2	295.2	295.2	295.2	293.9	293.1	292.6	293.5	293.8	293.7	293.7
138	***	***	2.064	295.2	295.2	295.2	295.2	295.2	295.2	293.8	292.9	292.5	293.4	293.7	293.5	293.5
148	***	***	2.062	295.2	295.2	295.2	295.2	294.7	295.2	293.5	292.8	292.4	293.3	293.5	293.3	293.3
158	***	***	2.061	295.2	295.2	295.2	295.2	294.2	294.2	293.5	292.5	292.4	293.1	293.4	293.2	293.2
168	***	***	2.059	294.2	295.2	295.2	295.2	294.2	294.2	293.2	292.6	292.2	293.1	293.2	293.1	293.1
178	***	***	2.057	294.2	295.2	295.2	295.2	294.2	294.2	293.2	292.4	292.2	292.9	293.1	292.9	293.0
188	***	***	2.056	294.2	295.2	295.2	295.2	294.2	294.2	293.1	292.4	292.0	292.9	293.0	292.9	292.9

COORDINATES

I	R (M)	THETA (DEG)	Z (M)
1	0.0	***	-0.152
2	0.0	***	-0.076
3	0.0	***	0.0
4	0.0	***	0.076
5	0.0	***	0.152
6	0.0	***	0.229
7	0.0	***	0.530
8	0.0	***	0.610
9	0.0	***	0.686
10	0.0	***	0.762
11	0.0	***	0.838
12	0.0	***	0.914
13	0.0	***	0.991

Table 13B — Inferred Pressurant Distribution, Scaling Run 34, Test Configuration 2: Two 2.54-cm Nozzles [(J) indicates thermocouples on an inlet jet centerline]

t (s)	$\bar{T}$ (°C)	$\bar{T}_s$ (°C)	$\bar{T}_p$ (°C)	β	β/θ	$\bar{X}$	1	2	3(J)	4	5	6	7	8	9	10	11	12	13
						Pressurant Fractions (X) at Locations I													
COMMENCE VALVE OPENING																			
0.0	17.7	17.7	89.8	-.0	0.0000	0.000	0.000	0.000	0.000	0.000	0.000	0.000	0.000	0.000	0.000	0.000	0.000	0.000	
1.0	17.8	17.8	19.6	44339.3	-7.0292	-.000	-.026	-.026	-.026	-.026	-.026	-.026	-.026	.139	.029	-.026	.029	.029	-.026
VALVE FULLY OPEN																			
2.0	22.4	22.6	20.5	79.1	9.8291	.117	.654	.891	2.315	.654	.891	.891	-.581	-1.293	-.818	-1.055	-.628	-.438	.037
3.0	28.3	30.7	20.4	16.3	2.3547	.236	.098	.485	1.066	.195	.195	.291	.011	.011	.156	-.038	.146	.233	.214
4.0	31.4	36.5	20.5	10.0	1.1446	.318	.172	.453	.827	.203	.234	.297	.203	.234	.297	.284	.303	.322	.309
5.0	33.2	40.6	21.2	8.6	.7943	.379	.249	.508	.818	.301	.301	.353	.317	.296	.363	.332	.348	.368	.368
6.0	33.8	42.8	21.8	9.4	.7562	.427	.335	.573	.859	.335	.383	.383	.349	.359	.397	.373	.407	.397	.397
COMMENCE VALVE CLOSURE																			
7.0	34.2	44.5	22.3	9.0	.6104	.464	.396	.599	.869	.396	.419	.441	.392	.401	.432	.419	.423	.432	.419
8.0	34.8	46.3	22.9	-2730.9	.4329	.493	.452	.666	.923	.452	.452	.495	.144	.452	.478	.474	.478	.474	.470
VALVE FULLY CLOSED																			
9.0	33.8	45.4	22.7	-3246.6	.5147	.513	.472	.648	.913	.450	.450	.472	.441	.458	.472	.476	.472	.476	.467
10.0	32.5	43.5	22.1	-1306.8	.2072	.513	.500	.593	.734	.453	.500	.500	.462	.481	.481	.495	.495	.486	.486
11.0	31.7	42.1	21.7	-935.8	.1483	.513	.486	.583	.681	.437	.486	.486	.495	.495	.505	.515	.505	.505	.486
12.0	31.1	41.3	21.4	-656.3	.1040	.513	.500	.576	.677	.450	.525	.500	.480	.480	.485	.515	.500	.490	.485
13.0	30.5	40.4	21.2	-684.8	.1086	.513	.473	.578	.682	.473	.525	.525	.468	.479	.494	.505	.489	.494	.479
14.0	30.1	39.7	21.0	-533.9	.0846	.513	.485	.565	.645	.458	.511	.511	.474	.485	.501	.538	.511	.501	.479
15.0	29.8	39.3	20.8	-366.3	.0581	.513	.498	.552	.607	.444	.498	.498	.482	.498	.514	.569	.503	.514	.487
16.0	29.5	38.8	20.7	-375.1	.0595	.513	.477	.532	.587	.477	.532	.477	.460	.493	.526	.581	.515	.521	.488
17.0	29.3	38.4	20.6	-384.1	.0609	.513	.505	.561	.561	.449	.505	.505	.472	.483	.533	.595	.500	.511	.483
18.0	29.0	37.9	20.4	-393.8	.0624	.513	.486	.543	.601	.429	.543	.486	.469	.492	.538	.583	.503	.515	.475
19.0	28.8	37.7	20.4	-200.6	.0318	.513	.467	.525	.583	.467	.525	.496	.479	.490	.542	.594	.490	.525	.479
20.0	28.5	37.3	20.3	-409.0	.0648	.513	.505	.505	.564	.446	.505	.505	.493	.511	.546	.599	.493	.523	.470
21.0	28.3	36.8	20.1	-419.9	.0666	.513	.484	.514	.544	.454	.514	.484	.496	.520	.556	.604	.496	.526	.472
22.0	28.1	36.6	20.1	-214.3	.0340	.513	.466	.526	.526	.466	.526	.466	.502	.514	.575	.611	.490	.526	.472
23.0	28.0	36.4	20.0	-217.2	.0344	.513	.453	.514	.514	.453	.514	.453	.520	.532	.569	.630	.502	.532	.477
24.0	27.7	35.9	19.9	-443.5	.0703	.513	.496	.496	.528	.434	.496	.496	.521	.521	.584	.613	.490	.515	.471
25.0	27.4	35.5	19.8	-456.3	.0723	.513	.467	.530	.530	.467	.530	.467	.518	.530	.569	.613	.486	.505	.454
26.0	27.4	35.5	19.8	0.0	0.0000	.513	.486	.518	.518	.454	.518	.486	.530	.524	.581	.607	.486	.498	.460
27.0	27.1	35.0	19.6	-470.1	.0745	.513	.510	.510	.510	.445	.510	.510	.536	.530	.569	.601	.484	.497	.452
28.0	27.0	34.8	19.6	-240.4	.0381	.513	.497	.497	.530	.464	.530	.497	.536	.523	.583	.589	.471	.497	.451
29.0	26.8	34.5	19.5	-244.1	.0387	.513	.480	.547	.547	.480	.547	.480	.520	.514	.567	.587	.467	.480	.447
30.0	26.7	34.3	19.5	-247.8	.0393	.513	.473	.540	.540	.473	.540	.473	.533	.520	.567	.581	.473	.493	.459
31.0	26.6	34.1	19.4	-251.9	.0399	.513	.522	.522	.522	.454	.556	.522	.522	.508	.556	.577	.474	.481	.447
32.0	26.4	33.8	19.3	-255.9	.0406	.513	.510	.510	.510	.510	.579	.510	.517	.510	.551	.579	.462	.476	.441
33.0	26.3	33.6	19.3	-260.3	.0413	.513	.505	.505	.505	.505	.575	.505	.533	.512	.554	.568	.463	.484	.449
34.0	26.0	33.2	19.2	-533.7	.0846	.513	.493	.564	.493	.493	.564	.493	.529	.507	.550	.564	.471	.486	.457
XXX																			

Table 14A — Scaling Run 35, Test Configuration 3: Three 2.54-cm Nozzles
[(J) indicates thermocouples on an inlet jet centerline]

t (s)	Press Tank P (atm)	T_s (K)	Chamber P (atm)	Chamber Absolute Temperatures (K) at Locations I: 1	2	3(J)	4	5	6	7	8	9	10	11	12(J)	13
-5	***	***	.996	273.2	292.2	292.2	292.2	273.2	273.2	291.5	290.5	290.4	291.5	291.4	291.4	291.3
-4	***	***	.997	273.2	292.2	292.2	292.2	273.2	273.2	291.5	290.5	290.3	291.5	291.5	291.3	291.3
-3	***	***	.997	273.2	292.2	292.2	292.2	273.2	273.2	291.5	290.6	290.2	291.5	291.5	291.3	291.3
-2	***	***	.997	273.2	292.2	292.2	292.2	273.2	273.2	291.5	290.6	290.2	291.4	291.5	291.3	291.3
-1	***	***	.997	273.2	292.2	292.2	292.2	273.2	273.2	291.6	290.6	290.3	291.3	291.6	291.3	291.3
0	6.299	293.2	.996	273.2	292.2	292.2	292.2	273.2	273.2	291.6	290.6	290.3	291.4	291.5	291.4	291.3
1	6.283	293.2	1.044	273.2	292.2	292.2	292.2	273.2	273.2	291.6	292.3	291.2	292.2	294.3	293.7	292.0
2	6.050	281.7	1.277	273.2	298.7	294.7	298.7	273.2	273.2	302.9	305.5	303.3	306.3	304.3	301.8	304.9
3	5.381	270.2	1.533	273.2	306.2	301.2	307.2	273.2	273.2	308.1	309.1	306.8	308.6	306.4	304.5	309.4
4	4.392	268.2	1.760	273.2	308.2	302.2	310.2	273.2	273.2	311.0	309.5	309.3	312.4	306.2	306.0	310.4
5	3.902	265.7	1.962	273.2	307.7	302.2	311.7	273.2	273.2	312.0	310.0	308.8	310.7	306.4	305.5	310.2
6	3.406	265.2	2.115	273.2	308.2	302.2	312.2	273.2	273.2	311.4	310.1	309.1	310.8	306.9	305.5	310.2
7	3.334	270.2	2.143	273.2	308.7	305.2	312.2	273.2	273.2	310.7	309.1	308.2	310.0	307.6	306.9	309.5
8	3.335	273.2	2.135	273.2	309.2	306.2	311.2	273.2	273.2	309.8	308.6	307.8	309.0	307.4	306.8	308.8
9	***	***	2.129	273.2	308.7	306.2	310.7	273.2	273.2	309.5	308.0	307.3	308.5	307.1	306.8	308.6
10	***	***	2.124	273.2	308.2	306.2	310.2	273.2	273.2	309.0	307.8	306.8	308.1	307.1	306.7	308.1
11	***	***	2.120	273.2	308.2	306.2	310.2	273.2	273.2	308.6	307.1	306.4	307.3	307.0	306.7	308.0
12	***	***	2.117	273.2	308.2	306.2	309.2	273.2	273.2	308.1	306.5	305.9	306.5	306.7	306.3	307.5
13	***	***	2.114	273.2	308.2	306.2	308.2	273.2	273.2	307.6	306.4	305.7	306.4	306.4	305.9	307.1
14	***	***	2.111	273.2	307.2	306.2	308.2	273.2	273.2	307.1	306.0	305.2	305.9	306.0	305.6	306.8
15	***	***	2.109	273.2	307.2	306.2	307.2	273.2	273.2	306.8	305.8	304.6	305.3	305.9	305.3	306.3
16	***	***	2.107	273.2	307.2	306.2	307.2	273.2	273.2	306.5	305.4	304.5	304.8	305.7	305.2	306.0
21	***	***	2.097	273.2	304.7	304.2	304.2	273.2	273.2	304.4	303.4	302.4	302.7	304.5	304.0	304.5
26	***	***	2.089	273.2	303.2	302.2	303.2	273.2	273.2	302.6	301.9	300.3	300.7	303.2	302.8	303.3
31	***	***	2.082	273.2	302.2	302.2	302.2	273.2	273.2	301.3	300.5	299.0	299.5	301.7	301.3	301.7
36	***	***	2.076	273.2	302.2	301.2	301.2	273.2	273.2	300.9	300.0	298.7	299.1	301.0	300.4	300.4
41	***	***	2.071	273.2	301.2	301.2	301.2	273.2	273.2	300.2	299.2	298.0	298.7	300.2	299.7	299.8
46	***	***	2.066	273.2	300.2	300.2	300.2	273.2	273.2	299.3	298.1	297.4	298.1	299.3	298.9	299.0
51	***	***	2.063	273.2	300.2	300.2	300.2	273.2	273.2	298.4	297.4	296.6	297.5	298.7	298.1	298.3
56	***	***	2.059	273.2	299.2	299.2	299.2	273.2	273.2	298.0	297.1	296.4	297.4	298.3	297.9	297.7
61	***	***	2.057	273.2	299.2	298.2	298.2	273.2	273.2	297.6	296.8	296.2	297.0	298.1	297.7	297.3
66	***	***	2.054	273.2	298.2	298.2	298.2	273.2	273.2	297.4	296.5	295.8	296.7	297.7	297.4	296.9
76	***	***	2.049	273.2	298.2	298.2	297.2	273.2	273.2	296.6	295.8	295.1	296.2	297.3	296.8	296.3
86	***	***	2.044	273.2	297.2	297.2	297.2	273.2	273.2	296.2	295.2	294.6	295.7	296.4	296.2	295.7
96	***	***	2.041	273.2	297.2	297.2	297.2	273.2	273.2	296.0	295.0	294.3	295.1	296.1	295.7	295.4
106	***	***	2.038	273.2	297.2	297.2	296.2	273.2	273.2	295.4	294.5	294.0	295.1	295.6	295.5	295.1
116	***	***	2.035	273.2	296.2	296.2	296.2	273.2	273.2	295.1	294.1	293.8	294.8	295.3	295.3	294.8
126	***	***	2.033	273.2	296.2	296.2	296.2	273.2	273.2	294.6	293.9	293.4	294.6	295.2	295.1	294.5
136	***	***	2.031	273.2	296.2	296.2	296.2	273.2	273.2	294.5	293.7	293.2	294.5	295.0	294.8	294.5
146	***	***	2.029	273.2	296.2	296.2	295.2	273.2	273.2	294.2	293.3	293.1	294.3	294.8	294.8	294.2
156	***	***	2.027	273.2	296.2	296.2	295.2	273.2	273.2	294.2	293.3	293.0	294.1	294.8	294.7	294.1
166	***	***	2.026	273.2	296.2	295.2	295.2	273.2	273.2	294.0	293.1	292.9	294.0	294.5	294.5	293.9
176	***	***	2.024	273.2	295.2	295.2	295.2	273.2	273.2	293.9	293.0	292.9	293.5	294.5	294.6	293.9
186	***	***	2.023	273.2	295.2	295.2	295.2	273.2	273.2	293.9	292.9	292.7	293.9	294.3	294.5	293.8

COORDINATES

I	R (M)	THETA (DEG)	Z (M)
1	0.0	***	-0.152
2	0.0	***	-0.076
3	0.0	***	0.0
4	0.0	***	0.076
5	0.0	***	0.152
6	0.0	***	0.229
7	0.0	***	0.530
8	0.0	***	0.610
9	0.0	***	0.686
10	0.0	***	0.762
11	0.0	***	0.838
12	0.0	***	0.914
13	0.0	***	0.991

Table 14B — Inferred Pressurant Distribution, Scaling Run 35, Test Configuration 3: Three 2.54-cm Nozzles [(J) indicates thermocouples on an inlet jet centerline]

t (s)	$\bar{T}$ (°C)	$\bar{T}_s$ (°C)	$\bar{T}_f$ (°C)	β	β/θ	$\bar{X}$	Pressurant Fractions (X) at Locations I: 1	2	3(J)	4	5	6	7	8	9	10	11	12(J)	13
CONMENCE VALVE OPENING																			
0.0	14.1	14.1	55.2	.3	0.0000	0.000	0.000	0.000	0.000	0.000	0.000	0.000	0.000	0.000	0.000	0.000	0.000	0.000	
1.0	14.8	14.7	20.4	-34.5	-.1913	.006	-.119	-.119	-.119	-.119	-.119	-.119	-.119	.180	.057	.022	.356	.285	.004
VALVE FULLY OPEN																			
2.0	22.2	22.6	20.8	42.7	9.1527	.198	4.723	1.123	3.338	1.123	4.723	4.723	-1.537	-3.531	-2.534	-3.531	-2.312	-.983	-2.755
3.0	25.7	28.4	20.3	17.3	2.9458	.324	1.765	.037	.654	-.086	1.765	1.765	-.271	-.395	-.284	-.358	-.062	.148	-.469
4.0	27.2	32.0	20.2	13.4	1.7776	.408	1.515	.166	.672	-.002	1.515	1.515	-.120	-.078	-.095	-.255	.284	.284	-.095
COMMENCE VALVE CLOSURE																			
5.0	27.2	33.4	20.2	14.0	1.5204	.469	1.465	.288	.706	-.015	1.465	1.465	-.084	-.008	.053	-.000	.341	.394	.030
6.0	27.3	34.3	20.4	178.1	.9893	.507	1.459	.308	.739	.020	1.459	1.459	.034	.056	.099	.063	.358	.444	.099
VALVE FULLY CLOSED																			
7.0	27.4	34.6	20.6	28.2	.1567	.514	1.468	.287	.538	.037	1.468	1.468	.101	.144	.180	.137	.323	.359	.166
8.0	26.3	33.0	19.9	39.5	.2196	.514	1.512	.215	.444	.062	1.512	1.512	.123	.139	.169	.169	.307	.337	.177
9.0	25.4	31.8	19.4	32.1	.1784	.514	1.544	.218	.419	.058	1.544	1.544	.106	.146	.170	.170	.299	.307	.154
10.0	24.7	30.8	18.9	28.6	.1591	.514	1.572	.226	.394	.057	1.572	1.572	.108	.125	.175	.167	.268	.285	.158
11.0	24.2	30.0	18.6	24.3	.1350	.514	1.597	.197	.372	.022	1.597	1.597	.110	.154	.180	.206	.250	.259	.136
12.0	23.7	29.4	18.4	19.1	.1062	.514	1.605	.161	.342	.071	1.605	1.605	.116	.134	.188	.206	.242	.260	.143
13.0	23.3	28.8	18.1	20.0	.1110	.514	1.613	.122	.309	.122	1.613	1.613	.122	.141	.169	.216	.234	.262	.141
14.0	22.9	28.2	17.9	20.9	.1161	.514	1.622	.176	.273	.080	1.622	1.622	.128	.138	.176	.225	.234	.253	.128
15.0	22.6	27.8	17.7	14.5	.0805	.514	1.620	.141	.240	.141	1.620	1.620	.121	.121	.200	.250	.210	.250	.141
16.0	22.3	27.4	17.5	15.0	.0832	.514	1.633	.117	.218	.117	1.633	1.633	.127	.138	.188	.279	.208	.239	.148
17.0	22.1	27.0	17.4	15.5	.0860	.514	1.626	.176	.228	.124	1.626	1.626	.134	.124	.207	.269	.186	.228	.124
18.0	21.8	26.6	17.2	16.0	.0892	.514	1.630	.143	.249	.143	1.630	1.630	.111	.132	.196	.291	.185	.217	.121
19.0	21.5	26.2	17.0	16.6	.0924	.514	1.624	.150	.259	.205	1.624	1.624	.117	.106	.205	.314	.150	.194	.106
20.0	21.2	25.8	16.9	17.3	.0960	.514	1.620	.162	.274	.162	1.620	1.620	.139	.117	.218	.319	.128	.184	.117
21.0	20.9	25.4	16.7	18.0	.0998	.514	1.618	.174	.232	.232	1.618	1.618	.140	.140	.209	.313	.128	.163	.093
22.0	20.7	25.0	16.6	18.7	.1040	.514	1.629	.201	.201	.201	1.629	1.629	.177	.117	.224	.331	.093	.165	.082
23.0	20.5	24.2	17.0	9.7	.0536	.514	1.780	.121	.260	.121	1.780	1.780	.121	.080	.204	.273	.052	.094	.011
24.0	20.2	23.7	17.0	20.0	.1109	.514	1.847	.120	.195	.195	1.847	1.847	.105	.030	.195	.300	-.015	.060	-.045
25.0	20.0	23.1	17.0	20.9	.1160	.514	1.935	.127	.127	.127	1.935	1.935	.061	-.005	.192	.357	-.038	.012	-.087
26.0	19.8	22.3	17.3	10.8	.0601	.514	2.265	-.043	.167	-.043	2.265	2.265	-.043	-.106	.167	.314	-.169	-.127	-.232
27.0	19.5	21.7	17.5	22.5	.1248	.514	2.438	-.188	.051	.051	2.438	2.438	-.092	-.092	.123	.314	-.212	-.212	-.379
28.0	19.4	21.4	17.5	11.7	.0647	.514	2.531	-.033	-.033	-.033	2.531	2.531	-.109	-.161	.147	.326	-.289	-.289	-.443
29.0	19.1	20.6	17.8	24.3	.1348	.514	3.273	-.286	-.286	-.286	3.273	3.273	-.357	-.321	-.037	.284	-.499	-.606	-.748
30.0	19.0	20.0	18.0	12.6	.0702	.514	4.284	-.697	-.697	-.697	4.284	4.284	-.548	-.697	-.149	.100	-.797	-.847	-1.145
31.0	18.8	19.7	18.0	13.0	.0723	.514	4.859	-.959	-.959	-.959	4.859	4.859	-.784	-.900	-.319	.080	-1.017	-.900	-1.191
32.0	18.6	19.1	18.0	27.2	.1511	.514	6.972	-1.783	-1.783	-1.783	6.972	6.972	-1.433	-1.433	-.820	-.295	-1.695	-1.433	-1.783
33.0	18.4	18.9	18.0	14.2	.0791	.514	9.082	-2.631	-2.631	-2.631	9.082	9.082	-2.162	-2.162	-1.225	-.405	-2.397	-2.045	-2.279
34.0	18.4	18.9	18.0	0.0	0.0000	.514	8.884	-2.829	-1.658	-2.829	8.884	8.884	-2.009	-2.360	-1.189	-.604	-2.360	-1.892	-2.243

Table 15A — Scaling Run 36, Test Configuration 3: Three 2.54-cm Nozzles
[(J) indicates thermocouples on an inlet jet centerline]

t (s)	Press Tank P (atm)	T_t (K)	Chamber P (atm)	Chamber Absolute Temperatures (K) at Locations I: 1	2	3(J)	4	5	6	7	8	9	10	11	12(J)	13
-5	***	***	.996	292.2	292.2	292.2	292.2	292.2	292.2	291.5	290.4	290.1	291.3	291.3	291.2	291.1
-4	***	***	.997	292.2	292.2	292.2	292.2	292.2	292.2	291.4	290.4	290.1	291.3	291.3	291.1	291.1
-3	***	***	.997	292.2	292.2	292.2	292.2	292.2	292.2	291.4	290.4	290.1	291.3	291.4	291.2	291.1
-2	***	***	.997	292.2	292.2	292.2	292.2	292.2	292.2	291.4	290.5	290.0	291.3	291.5	291.2	291.1
-1	***	***	.997	292.2	292.2	292.2	292.2	292.2	292.2	291.4	290.5	290.1	291.2	291.4	291.2	291.1
0	6.275	293.2	.997	292.2	292.2	292.2	292.2	292.2	292.2	291.4	290.5	290.1	291.3	291.5	291.2	291.2
1	6.283	293.2	.997	292.2	292.2	292.2	292.2	292.2	292.2	291.3	290.6	290.1	291.4	291.5	291.2	291.1
2	6.107	285.7	1.166	297.7	293.7	292.7	295.7	296.7	296.7	298.7	301.8	302.1	302.0	300.4	300.3	298.8
3	5.529	272.2	1.447	308.2	304.2	298.2	306.2	306.2	306.2	305.2	308.5	305.8	308.0	303.8	304.2	306.0
4	4.624	268.2	1.693	311.7	308.2	302.2	310.2	310.7	310.2	309.7	308.7	306.9	309.6	306.4	306.6	310.6
5	4.072	266.2	1.896	313.2	308.2	303.2	312.2	313.2	312.2	310.9	310.1	308.5	311.1	307.3	305.4	310.6
6	3.521	265.2	2.065	313.2	309.2	302.2	313.2	313.2	312.2	311.1	310.1	309.4	311.3	306.8	305.9	311.0
7	3.345	269.7	2.119	312.7	309.2	304.7	312.2	312.2	312.2	310.9	309.3	308.8	310.5	308.3	307.6	310.2
8	3.377	275.2	2.109	311.2	310.2	307.2	311.2	311.2	311.2	309.9	308.5	307.9	309.5	307.9	307.4	309.5
9	***	***	2.103	310.2	309.2	306.7	310.2	310.2	310.2	308.8	308.1	307.4	308.8	308.0	307.4	308.9
10	***	***	2.098	310.2	308.2	306.2	309.2	309.2	310.2	308.8	307.6	307.1	308.4	307.6	307.1	308.6
11	***	***	2.094	310.2	308.2	306.2	309.2	309.2	309.2	308.2	307.3	306.6	308.1	307.4	306.8	308.1
12	***	***	2.090	309.2	308.2	306.2	309.2	308.7	309.2	307.7	306.7	306.2	307.3	307.2	306.7	307.9
13	***	***	2.087	309.2	308.2	306.2	308.2	308.2	309.2	307.3	306.2	305.7	306.6	306.7	306.4	307.4
14	***	***	2.085	308.2	307.7	306.2	308.2	308.2	308.2	307.0	306.1	305.2	306.4	306.7	306.1	307.1
15	***	***	2.082	308.2	307.2	306.2	308.2	308.2	308.2	306.7	305.9	304.9	305.8	306.6	305.8	306.6
16	***	***	2.080	307.7	307.2	306.2	307.2	307.2	307.7	306.3	305.3	304.2	305.3	305.9	305.3	306.3
21	***	***	2.070	306.2	306.2	305.2	305.7	305.7	305.7	304.3	303.0	302.0	303.2	304.5	303.9	304.6
26	***	***	2.061	304.2	303.7	303.2	303.2	303.2	304.2	302.1	301.2	300.2	301.2	302.9	302.5	303.0
31	***	***	2.055	303.2	303.2	302.2	301.7	301.7	302.2	301.0	300.2	299.1	299.9	301.8	301.2	301.7
36	***	***	2.050	302.2	302.2	301.2	301.2	301.2	301.2	300.4	299.3	298.1	299.1	300.8	300.3	300.4
41	***	***	2.045	302.2	302.2	301.2	301.2	301.2	301.2	299.9	298.8	297.6	298.5	300.3	299.8	299.8
46	***	***	2.040	301.2	301.2	301.2	300.2	300.2	300.2	299.3	298.3	297.3	298.0	299.5	299.2	299.0
51	***	***	2.037	300.2	300.2	300.2	300.2	300.2	300.2	298.7	297.8	296.7	297.7	299.2	298.6	298.3
56	***	***	2.034	299.2	300.2	299.2	299.2	299.2	299.2	298.3	297.3	296.4	297.2	298.7	298.3	297.9
61	***	***	2.031	299.2	299.2	299.2	299.2	298.2	299.2	298.0	296.8	296.0	296.8	298.4	298.1	297.7
66	***	***	2.028	298.2	299.2	299.2	298.2	298.2	298.2	297.5	296.5	295.5	296.5	298.0	297.6	297.4
76	***	***	2.023	298.2	298.2	298.2	297.2	297.2	298.2	296.8	295.7	295.1	296.2	297.2	296.9	296.7
86	***	***	2.020	297.2	297.2	297.2	297.2	297.2	297.2	296.0	295.2	294.6	295.4	296.7	296.5	296.0
96	***	***	2.016	297.2	297.2	297.2	297.2	297.2	297.2	295.6	294.8	294.2	295.3	296.1	295.9	295.6
106	***	***	2.013	296.2	297.2	297.2	296.2	296.2	296.2	295.1	294.5	293.8	295.0	295.8	295.5	295.2
116	***	***	2.011	296.2	296.2	296.2	296.2	296.2	296.2	294.9	294.1	293.7	294.6	295.6	295.2	294.9
126	***	***	2.009	296.2	296.2	296.2	296.2	296.2	296.2	294.8	293.8	293.5	294.3	295.2	295.2	294.6
136	***	***	2.007	296.2	296.2	296.2	296.2	295.2	296.2	294.5	293.7	293.3	294.5	295.0	295.0	294.5
146	***	***	2.005	296.2	296.2	296.2	296.2	295.2	295.2	294.5	293.5	293.2	294.2	295.0	294.9	294.4
156	***	***	2.003	295.2	296.2	296.2	295.2	295.2	295.2	294.2	293.4	293.0	294.2	294.9	294.7	294.1
166	***	***	2.002	295.2	296.2	296.2	295.2	295.2	295.2	294.2	293.2	293.0	294.2	294.7	294.6	294.0
176	***	***	2.000	295.2	296.2	296.2	295.2	295.2	295.2	294.0	293.1	292.9	293.9	294.6	294.6	293.9
186	***	***	1.999	295.2	296.2	295.2	295.2	295.2	295.2	293.9	293.1	292.8	293.9	294.6	294.5	293.8

COORDINATES

I	R (M)	THETA (DEG)	Z (M)
1	0.0	***	-0.152
2	0.0	***	-0.076
3	0.0	***	0.0
4	0.0	***	0.076
5	0.0	***	0.152
6	0.0	***	0.229
7	0.0	***	0.530
8	0.0	***	0.610
9	0.0	***	0.686
10	0.0	***	0.762
11	0.0	***	0.838
12	0.0	***	0.914
13	0.0	***	0.991

Table 15B — Inferred Pressurant Distribution, Scaling Run 36, Test Configuration 3: Three 2.54-cm Nozzles [(J) indicates thermocouples on an inlet jet centerline]

t (s)	$\bar{T}$ (°C)	$\bar{T}_s$ (°C)	$\bar{T}_p$ (°C)	β	β/θ	$\bar{X}$	1	2	3(J)	4	5	6	7	8	9	10	11	12(J)	13
						Pressurant Fractions (X) at Locations I													
COMMENCE VALVE OPENING																			
0.0	18.4	18.4	31.8	-.0	0.0000	0.000	0.000	0.000	0.000	0.000	0.000	0.000	0.000	0.000	0.000	0.000	0.000	0.000	
1.0	18.4	18.4	20.9	266965.9	-7.0383	-.000	-.003	-.003	-.003	-.003	-.003	-.003	-.042	.036	-.003	.075	-.003	-.003	-.042
VALVE FULLY OPEN																			
2.0	25.2	25.7	21.7	43.0	5.7238	.125	.461	.960	1.709	.960	.711	.711	.012	-.987	-1.162	-.862	-.388	-.438	-.063
3.0	32.2	35.9	22.6	12.5	2.4091	.278	.119	.419	.871	.269	.269	.269	.284	-.032	.141	.058	.397	.344	.209
4.0	35.4	42.9	23.0	8.0	1.1785	.377	.252	.429	.732	.328	.303	.328	.313	.318	.388	.308	.484	.459	.257
COMMENCE VALVE CLOSURE																			
5.0	36.5	46.7	23.6	7.8	.8539	.441	.317	.534	.751	.361	.317	.361	.382	.378	.430	.365	.543	.612	.387
6.0	36.7	48.7	24.1	-26283.8	.6929	.487	.379	.542	.826	.379	.379	.420	.432	.436	.448	.416	.611	.635	.428
VALVE FULLY CLOSED																			
7.0	36.7	49.1	24.3	-8608.9	.2270	.500	.413	.554	.736	.433	.433	.433	.453	.482	.486	.461	.562	.579	.473
8.0	35.2	46.9	23.6	-7873.0	.2076	.500	.452	.495	.624	.452	.452	.452	.473	.495	.504	.482	.564	.572	.482
9.0	34.4	45.6	23.2	-5060.0	.1334	.500	.465	.510	.621	.465	.465	.465	.492	.483	.496	.483	.532	.545	.478
10.0	33.6	44.5	22.8	-4434.0	.1169	.500	.443	.536	.628	.490	.490	.443	.471	.485	.490	.480	.531	.540	.471
11.0	33.1	43.6	22.5	-3702.8	.0976	.500	.428	.523	.618	.476	.476	.476	.485	.485	.500	.481	.528	.542	.481
12.0	32.5	42.7	22.3	-3852.4	.1016	.500	.438	.507	.605	.458	.483	.458	.493	.498	.507	.503	.522	.532	.473
13.0	32.0	42.0	22.0	-2997.0	.0790	.500	.439	.489	.589	.489	.489	.439	.494	.504	.509	.519	.529	.529	.479
14.0	31.7	41.6	21.9	-2051.9	.0541	.500	.472	.498	.574	.472	.472	.472	.493	.493	.518	.513	.513	.528	.478
15.0	31.3	40.9	21.7	-3163.2	.0834	.500	.461	.513	.565	.461	.461	.461	.497	.492	.523	.534	.508	.534	.492
16.0	31.0	40.4	21.6	-2168.8	.0572	.500	.459	.486	.539	.486	.486	.459	.491	.496	.533	.533	.517	.533	.480
17.0	30.7	40.0	21.4	-2219.1	.0585	.500	.465	.465	.519	.465	.465	.465	.482	.514	.552	.537	.530	.536	.482
18.0	30.4	39.5	21.3	-2273.2	.0599	.500	.456	.456	.510	.456	.456	.456	.488	.538	.560	.576	.527	.538	.483
19.0	30.1	39.1	21.2	-2329.0	.0614	.500	.428	.484	.484	.484	.484	.456	.506	.523	.567	.573	.506	.523	.484
20.0	29.7	38.4	21.0	-3602.9	.0950	.500	.463	.463	.520	.463	.463	.463	.514	.526	.566	.560	.503	.520	.474
21.0	29.5	38.2	20.9	-1232.9	.0325	.500	.446	.446	.504	.475	.475	.475	.510	.533	.568	.562	.504	.521	.481
22.0	29.2	37.7	20.8	-2514.8	.0663	.500	.423	.482	.482	.482	.482	.482	.523	.523	.576	.570	.494	.517	.464
23.0	29.0	37.3	20.7	-2581.1	.0680	.500	.460	.460	.460	.460	.520	.460	.526	.532	.574	.568	.496	.520	.466
24.0	28.8	37.0	20.6	-1318.0	.0347	.500	.436	.467	.497	.497	.497	.436	.528	.528	.570	.582	.485	.509	.467
25.0	28.5	36.6	20.5	-2693.3	.0710	.500	.467	.467	.530	.467	.467	.467	.530	.523	.573	.579	.474	.498	.455
26.0	28.2	36.1	20.3	-2770.8	.0730	.500	.444	.475	.507	.507	.507	.444	.526	.526	.564	.571	.482	.488	.456
27.0	28.1	35.9	20.3	-1416.5	.0373	.500	.427	.491	.491	.491	.491	.491	.523	.517	.568	.587	.472	.491	.459
28.0	27.9	35.6	20.2	-1437.9	.0379	.500	.408	.472	.537	.537	.472	.472	.511	.518	.557	.589	.485	.492	.447
29.0	27.6	35.2	20.1	-2942.8	.0776	.500	.452	.452	.519	.519	.519	.452	.519	.512	.559	.578	.472	.499	.446
30.0	27.5	34.9	20.0	-1506.5	.0397	.500	.446	.446	.513	.513	.513	.446	.520	.520	.566	.587	.473	.499	.459
31.0	27.3	34.7	20.0	-1531.4	.0404	.500	.425	.425	.493	.527	.527	.493	.520	.513	.561	.581	.480	.493	.459
32.0	27.2	34.5	19.9	-1555.9	.0410	.500	.407	.476	.476	.545	.545	.476	.504	.517	.552	.579	.476	.490	.456
33.0	27.1	34.2	19.9	-1581.9	.0417	.500	.399	.469	.469	.538	.538	.469	.511	.524	.566	.580	.476	.490	.469
34.0	26.9	34.0	19.8	-1609.4	.0424	.500	.389	.460	.460	.530	.530	.460	.516	.530	.572	.579	.481	.509	.481

Table 16A — Scaling Run 37, Test Configuration 3: Three 2.54-cm Nozzles
[(J) indicates thermocouples on an inlet jet centerline]

t (s)	Press Tank P (atm)	T_s (K)	Chamber P (atm)	Chamber Absolute Temperatures (K) at Locations I: 1	2	3(J)	4	5	6	7	8	9	10	11	12(J)	13
-5	***	***	.997	292.2	292.2	292.2	292.2	292.2	292.2	291.5	290.5	290.1	291.1	291.5	291.3	291.1
-4	***	***	.997	292.2	292.2	292.2	292.2	292.2	292.2	291.5	290.5	290.1	291.1	291.5	291.2	291.2
-3	***	***	.997	292.2	292.2	292.2	292.2	292.2	292.2	291.5	290.5	290.1	291.1	291.5	291.3	291.1
-2	***	***	.997	292.2	292.2	292.2	292.2	292.2	292.2	291.5	290.5	290.1	291.1	291.3	291.3	291.1
-1	***	***	.997	292.2	292.2	292.2	292.2	292.2	292.2	291.5	290.4	290.2	291.3	291.3	291.3	291.0
0	6.334	293.2	.999	292.2	292.2	292.2	292.2	292.2	292.2	291.4	290.4	290.1	291.3	291.4	291.2	291.1
1	6.254	293.2	1.026	292.7	292.7	292.2	292.2	292.2	292.7	292.1	294.9	292.9	294.2	294.1	294.3	292.5
2	5.902	278.2	1.291	302.2	298.2	293.2	298.2	300.2	300.2	303.0	302.2	303.4	304.8	302.4	301.2	302.3
3	5.049	270.7	1.529	309.7	306.2	299.2	307.2	308.2	307.2	306.7	308.0	305.5	308.5	305.3	305.0	307.7
4	4.381	267.2	1.763	312.2	307.2	302.2	311.2	311.2	311.2	309.6	310.0	308.1	310.4	305.4	305.2	309.7
5	3.793	265.7	1.960	313.2	307.7	302.7	312.7	312.7	311.7	311.3	310.1	308.8	310.7	305.8	306.0	310.4
6	3.426	266.2	2.111	312.2	307.2	303.2	312.2	312.2	312.2	311.6	310.2	309.1	310.8	306.9	306.2	310.6
7	3.366	277.2	2.110	311.2	308.2	306.2	311.2	311.2	311.2	310.6	309.2	308.7	310.0	308.0	307.5	309.5
8	3.416	287.2	2.101	310.7	308.2	306.7	311.2	310.7	310.7	309.7	308.7	308.0	309.2	307.6	307.3	309.1
9	***	***	2.096	310.2	308.2	307.2	310.2	310.2	310.2	309.4	308.2	307.7	308.6	307.5	307.1	308.6
10	***	***	2.091	310.2	308.2	307.2	310.2	310.2	310.2	308.8	307.7	307.1	308.4	307.4	307.0	308.4
11	***	***	2.088	309.2	308.2	307.2	310.2	309.2	310.2	308.5	307.4	306.6	307.5	307.2	306.9	308.1
12	***	***	2.084	309.2	308.2	306.2	309.2	309.2	309.2	308.1	307.0	305.8	306.7	306.8	306.4	307.9
13	***	***	2.082	308.7	307.7	306.2	309.2	308.7	309.2	307.3	306.3	305.1	305.8	306.7	306.0	307.0
14	***	***	2.079	308.2	307.2	306.2	308.2	308.2	308.2	306.9	306.1	304.6	305.1	306.4	305.6	306.3
15	***	***	2.077	307.2	307.2	305.7	308.2	308.2	308.2	306.9	305.9	304.4	304.6	305.9	305.2	306.0
16	***	***	2.074	307.2	306.2	305.2	307.2	307.2	308.2	306.6	305.5	304.2	304.2	305.7	305.0	305.9
21	***	***	2.064	305.2	305.2	304.2	305.2	305.2	306.2	304.6	303.4	302.0	302.2	304.2	303.4	304.0
26	***	***	2.057	303.2	304.2	303.2	304.2	304.2	304.2	302.7	301.7	300.2	300.8	302.9	302.0	302.6
31	***	***	2.050	303.2	303.2	302.2	302.2	303.2	303.2	301.1	300.7	299.3	300.3	302.1	301.2	301.3
36	***	***	2.045	302.2	302.2	302.2	302.2	302.2	302.2	300.2	299.8	298.7	299.7	301.2	300.3	300.2
41	***	***	2.040	301.2	301.2	301.2	301.2	301.2	302.2	299.5	299.0	298.1	299.2	300.5	299.8	299.5
46	***	***	2.036	301.2	301.2	301.2	300.2	300.2	301.2	299.0	298.3	297.4	298.1	299.9	299.1	298.8
51	***	***	2.032	300.2	300.2	300.2	300.2	300.2	300.2	298.3	297.7	296.8	297.9	299.3	298.7	298.2
56	***	***	2.029	300.2	300.2	300.2	299.2	299.2	299.7	298.2	297.3	296.4	297.3	298.9	298.2	297.6
61	***	***	2.027	299.2	299.2	299.2	299.2	299.2	299.2	297.5	297.0	296.0	297.0	298.3	297.8	297.3
66	***	***	2.023	298.2	299.2	299.2	298.2	299.2	299.2	297.4	296.8	295.5	296.7	298.0	297.4	296.9
76	***	***	2.019	298.2	298.2	298.2	298.2	298.2	298.2	296.8	295.9	295.1	296.0	297.3	296.8	296.4
86	***	***	2.015	297.2	297.2	297.2	297.2	297.2	297.2	296.3	295.2	294.5	295.5	296.6	296.3	295.9
96	***	***	2.012	297.2	297.2	297.2	297.2	297.2	297.2	295.9	295.0	294.2	295.2	296.3	296.0	295.4
106	***	***	2.009	296.2	297.2	297.2	296.2	296.2	297.2	295.5	294.5	293.9	295.0	295.7	295.5	295.1
116	***	***	2.006	296.2	296.2	296.2	296.2	296.2	296.2	295.2	294.3	293.8	294.6	295.6	295.4	294.8
126	***	***	2.003	296.2	296.2	296.2	296.2	296.2	296.2	294.9	294.1	293.4	294.5	295.4	295.1	294.6
136	***	***	2.002	296.2	296.2	296.2	296.2	296.2	296.2	294.7	293.7	293.4	294.5	295.0	295.0	294.4
146	***	***	2.000	296.2	296.2	296.2	296.2	296.2	296.2	294.5	293.7	293.1	294.4	294.9	294.8	294.2
156	***	***	1.999	295.2	296.2	296.2	296.2	295.2	295.2	294.4	293.4	293.2	294.2	294.8	294.8	294.1
166	***	***	1.997	295.2	296.2	296.2	295.2	295.2	295.2	294.1	293.3	293.0	294.0	294.7	294.5	293.9
176	***	***	1.996	295.2	296.2	295.2	295.2	295.2	295.2	294.0	293.2	293.0	293.9	294.5	294.5	293.9
186	***	***	1.994	295.2	295.2	295.2	295.2	295.2	295.2	293.9	293.0	292.8	293.9	294.5	294.5	293.8

COORDINATES

I	R (M)	THETA (DEG)	Z (M)
1	0.0	***	-0.152
2	0.0	***	-0.076
3	0.0	***	0.0
4	0.0	***	0.076
5	0.0	***	0.152
6	0.0	***	0.229
7	0.0	***	0.530
8	0.0	***	0.610
9	0.0	***	0.686
10	0.0	***	0.762
11	0.0	***	0.838
12	0.0	***	0.914
13	0.0	***	0.991

Table 16B — Inferred Pressurant Distribution, Scaling Run 37, Test Configuration 3: Three 2.54-cm Nozzles [(J) indicates thermocouples on an inlet jet centerline]

t (s)	$\bar{T}$ (°C)	$\bar{T}_s$ (°C)	$\bar{T}_p$ (°C)	β	β/θ	$\bar{X}$	Pressurant Fractions (X) at Locations I: 1	2	3(J)	4	5	6	7	8	9	10	11	12(J)	13
COMMENCE VALVE OPENING																			
0.0	18.3	18.3	43.9	1.0	0.0000	0.000	0.000	0.000	0.000	0.000	0.000	0.000	0.000	0.000	0.000	0.000	0.000	0.000	
1.0	19.9	19.8	20.5	159.5	3.4300	.021	-1.582	-1.582	-2.378	-2.378	-2.378	-1.582	-1.264	4.782	2.077	2.237	1.918	2.555	-.150
VALVE FULLY OPEN																			
2.0	27.7	29.0	22.4	29.7	6.0148	.201	.100	.711	1.474	.711	.406	.406	-.144	-.174	-.403	-.434	-.052	.100	-.083
3.0	33.3	38.0	22.9	8.9	1.3402	.313	.145	.375	.836	.310	.244	.310	.290	.138	.283	.165	.382	.389	.204
4.0	35.5	43.7	23.2	8.1	1.0968	.400	.263	.507	.751	.312	.312	.312	.351	.282	.361	.307	.556	.556	.331
COMMENCE VALVE CLOSURE																			
5.0	36.3	47.0	23.8	8.0	.8269	.459	.329	.566	.781	.350	.350	.393	.376	.385	.428	.398	.613	.596	.402
6.0	36.4	48.4	24.2	29.3	.6362	.497	.416	.623	.788	.416	.416	.416	.408	.425	.458	.437	.602	.623	.437
VALVE FULLY CLOSED																			
7.0	36.2	48.2	24.1	.9	.0203	.497	.451	.576	.659	.451	.451	.451	.443	.460	.468	.464	.551	.564	.476
8.0	34.9	46.2	23.5	8.8	.1915	.497	.454	.564	.630	.432	.454	.454	.463	.463	.481	.481	.555	.560	.476
9.0	34.2	45.1	23.1	5.2	.1131	.497	.460	.551	.596	.460	.460	.460	.460	.469	.478	.492	.546	.555	.482
10.0	33.5	44.0	22.8	5.4	.1185	.497	.450	.544	.591	.450	.450	.450	.478	.483	.497	.492	.544	.554	.483
11.0	33.0	43.4	22.6	3.4	.0739	.497	.480	.528	.576	.432	.480	.432	.475	.480	.504	.519	.538	.543	.480
12.0	32.4	42.5	22.3	4.7	.1020	.497	.455	.504	.603	.455	.455	.455	.470	.475	.519	.534	.534	.544	.465
13.0	32.1	42.0	22.1	2.4	.0526	.497	.456	.506	.582	.431	.456	.431	.486	.486	.532	.557	.516	.542	.486
14.0	31.7	41.3	22.0	3.7	.0811	.497	.454	.506	.558	.454	.454	.454	.480	.470	.532	.568	.506	.537	.495
15.0	31.4	40.2	22.5	2.6	.0555	.497	.491	.491	.575	.434	.434	.434	.462	.468	.530	.587	.519	.547	.496
16.0	31.0	39.8	23.0	3.9	.0857	.497	.464	.528	.591	.464	.464	.401	.452	.458	.521	.591	.509	.540	.483
17.0	30.7	38.3	23.0	2.7	.0588	.497	.481	.514	.579	.448	.448	.415	.461	.448	.540	.586	.507	.553	.487
18.0	30.2	36.9	23.5	4.2	.0909	.497	.493	.493	.568	.493	.419	.419	.449	.456	.538	.598	.493	.546	.501
19.0	29.9	35.8	24.0	2.9	.0625	.497	.534	.534	.619	.449	.449	.365	.441	.441	.542	.593	.483	.542	.475
20.0	29.8	35.5	24.0	1.5	.0319	.497	.503	.503	.590	.460	.460	.417	.434	.460	.538	.625	.486	.521	.469
21.0	29.5	34.4	24.5	3.0	.0649	.497	.466	.466	.566	.466	.466	.365	.446	.466	.576	.677	.486	.546	.476
22.0	29.3	34.1	24.5	1.5	.0331	.497	.479	.531	.531	.427	.427	.375	.427	.469	.593	.718	.490	.531	.469
23.0	29.1	33.6	24.5	3.1	.0676	.497	.495	.495	.495	.495	.385	.385	.440	.462	.616	.716	.473	.550	.462
24.0	28.9	33.3	24.5	1.6	.0345	.497	.469	.469	.583	.469	.354	.354	.457	.491	.617	.719	.491	.537	.457
25.0	28.6	32.9	24.3	3.2	.0704	.497	.434	.434	.549	.434	.434	.376	.491	.503	.630	.710	.468	.549	.457
26.0	28.5	32.4	24.5	1.7	.0360	.497	.528	.401	.528	.401	.401	.401	.490	.490	.642	.718	.464	.540	.464
27.0	28.2	32.3	24.0	3.4	.0735	.497	.487	.487	.487	.487	.427	.367	.487	.499	.596	.668	.487	.535	.451
28.0	28.0	32.0	24.0	1.7	.0376	.497	.474	.474	.474	.474	.474	.350	.487	.474	.637	.687	.462	.537	.462
29.0	27.9	31.7	24.0	1.8	.0382	.497	.458	.458	.458	.458	.458	.328	.522	.509	.639	.678	.471	.548	.484
30.0	27.7	31.4	24.0	1.8	.0388	.497	.424	.424	.491	.491	.424	.424	.532	.478	.626	.680	.451	.532	.491
31.0	27.4	30.8	24.0	3.6	.0794	.497	.386	.386	.532	.532	.386	.386	.576	.488	.649	.678	.430	.532	.503
32.0	27.3	30.6	24.0	1.9	.0407	.497	.370	.370	.522	.522	.370	.370	.583	.476	.659	.690	.446	.553	.537
33.0	27.1	30.3	24.0	1.9	.0413	.497	.473	.473	.473	.473	.473	.313	.569	.489	.617	.649	.425	.537	.505
34.0	27.0	30.0	24.0	1.9	.0420	.497	.450	.450	.450	.450	.450	.366	.567	.483	.634	.668	.400	.550	.550

Table 17A — Scaling Run 39, Test Configuration 3: Three 1.52-cm Nozzles
[(J) indicates thermocouples on an inlet jet centerline]

t (s)	Press Tank P (atm)	T_s (K)	Chamber P (atm)	Chamber Absolute Temperatures (K) at Locations I: 1	2	3(J)	4	5	6	7	8	9	10	11	12(J)	13
-5	***	***	1.035	292.2	292.2	292.2	292.2	292.2	292.2	291.0	290.2	289.8	290.8	291.0	290.9	290.7
-4	***	***	1.035	292.2	292.2	292.2	292.2	292.2	292.2	291.0	290.2	289.9	290.9	291.0	290.9	290.5
-3	***	***	1.034	292.2	292.2	292.2	292.2	292.2	292.2	291.0	290.2	289.9	290.9	291.0	290.8	290.5
-2	***	***	1.034	292.2	292.2	292.2	292.2	292.2	292.2	291.0	290.2	289.9	290.9	291.0	290.7	290.5
-1	***	***	1.034	292.2	292.2	292.2	292.2	292.2	292.2	290.9	290.2	289.9	290.9	291.0	290.7	290.6
0	6.317	293.2	1.035	292.2	292.2	292.2	292.2	292.2	292.2	291.0	290.2	289.9	290.9	291.0	290.7	290.8
1	6.105	297.2	1.106	293.2	294.2	292.2	292.2	292.2	293.2	293.4	293.9	293.0	294.8	296.0	295.8	293.6
2	5.772	273.2	1.234	299.7	297.7	295.2	297.7	298.7	298.7	297.8	297.8	296.5	298.7	297.7	298.0	298.1
3	5.483	270.2	1.347	303.2	301.2	299.2	301.2	302.2	302.2	301.0	300.3	299.0	301.4	300.0	300.1	300.5
4	5.196	269.7	1.452	305.2	303.2	300.2	303.7	303.7	303.7	302.7	301.7	300.7	303.0	301.1	301.3	302.3
5	4.928	268.2	1.550	306.2	303.2	300.2	305.2	305.2	305.2	303.5	302.7	301.8	303.7	301.4	301.4	303.3
6	4.690	267.2	1.642	307.2	304.2	301.2	306.2	306.2	305.2	304.5	303.8	302.9	304.4	301.5	302.0	303.9
7	4.460	266.2	1.730	306.7	304.2	301.2	306.2	306.2	306.2	305.0	304.2	303.5	305.0	301.8	301.7	304.0
8	4.242	266.2	1.813	307.2	304.2	301.2	306.2	306.2	306.2	305.2	304.5	303.8	305.2	301.7	302.1	304.3
9	4.027	265.2	1.892	307.2	304.7	301.2	306.2	307.2	306.7	305.4	304.4	303.9	305.2	301.8	301.8	304.0
10	3.851	264.2	1.966	307.2	304.2	301.2	306.2	306.2	306.2	305.3	304.4	303.8	305.1	301.1	300.8	303.9
11	3.811	260.2	1.982	305.7	303.7	301.2	306.2	305.7	306.2	304.6	303.5	303.2	304.0	301.9	301.5	303.5
12	3.782	266.2	1.977	305.2	304.2	302.2	305.2	305.2	305.2	304.0	303.0	302.6	303.4	301.8	301.4	303.1
13	***	***	1.973	305.2	304.2	303.2	305.2	305.2	305.2	303.7	302.8	302.0	302.9	301.9	301.7	302.9
14	***	***	1.971	305.2	304.2	303.2	305.2	304.7	305.2	303.5	302.5	301.7	302.4	301.8	301.5	302.7
15	***	***	1.969	305.2	304.2	303.2	304.2	304.2	304.2	303.1	302.2	301.2	302.3	301.8	301.4	302.4
16	***	***	1.967	304.2	303.7	302.7	304.2	303.7	304.2	302.6	301.8	300.9	301.8	301.5	301.3	302.2
17	***	***	1.965	304.2	303.2	302.2	303.2	303.2	303.2	302.4	301.4	300.7	301.5	301.4	301.0	301.9
18	***	***	1.964	304.2	303.2	302.2	303.2	303.2	303.2	302.0	301.2	300.3	301.2	301.3	301.0	301.7
19	***	***	1.962	303.2	302.7	302.2	303.2	303.2	303.2	301.8	301.0	300.0	300.9	301.3	301.0	301.5
20	***	***	1.961	303.2	302.2	302.2	302.2	302.2	303.2	301.5	300.7	299.6	300.4	301.0	300.8	301.0
25	***	***	1.956	301.2	301.2	301.2	301.2	301.2	302.2	300.5	299.5	298.6	299.1	300.5	300.2	300.2
30	***	***	1.951	301.2	300.2	300.2	300.2	300.2	300.2	299.2	298.5	297.5	298.2	300.0	299.5	299.4
35	***	***	1.947	300.2	300.2	300.2	300.2	300.2	300.2	298.3	297.5	296.5	297.3	299.1	298.8	298.7
40	***	***	1.944	299.2	299.2	299.2	299.2	299.2	299.7	297.8	297.2	296.1	296.8	298.3	298.0	297.8
45	***	***	1.941	299.2	299.2	299.2	299.2	299.2	299.2	297.4	296.7	295.7	296.5	297.8	297.5	297.2
50	***	***	1.939	298.2	299.2	299.2	298.2	298.2	299.2	297.2	296.5	295.5	296.2	297.4	296.9	296.4
55	***	***	1.936	298.2	298.2	298.2	298.2	298.2	298.2	296.7	295.9	295.2	295.9	296.9	296.5	296.0
60	***	***	1.934	298.2	298.2	298.2	298.2	298.2	298.2	296.4	295.6	295.0	295.7	296.7	296.3	295.6
65	***	***	1.932	297.2	298.2	298.2	297.2	297.2	298.2	296.2	295.4	294.9	295.5	296.5	296.1	295.5
70	***	***	1.930	297.2	297.2	297.2	297.2	297.2	297.2	296.2	295.2	294.5	295.4	296.2	295.9	295.2
80	***	***	1.927	296.7	297.2	297.2	296.2	296.2	297.2	295.5	294.5	294.0	294.9	295.7	295.5	294.9
90	***	***	1.924	296.2	296.2	296.2	296.2	296.2	296.2	295.2	294.3	293.7	294.5	295.4	295.2	294.5
100	***	***	1.922	296.2	296.2	296.2	296.2	296.2	296.2	294.7	294.0	293.6	294.4	295.1	294.9	294.3
110	***	***	1.919	296.2	296.2	296.2	295.2	295.2	296.2	294.5	293.7	293.2	294.2	294.9	294.8	294.2
120	***	***	1.918	295.2	296.2	296.2	295.2	295.2	296.2	294.3	293.5	293.0	293.9	294.6	294.6	293.9
130	***	***	1.916	295.2	296.2	296.2	295.2	295.2	295.2	294.1	293.3	292.9	293.8	294.6	294.5	293.7
140	***	***	1.914	295.2	295.7	295.2	295.2	295.2	295.2	293.9	293.1	292.8	293.8	294.5	294.4	293.5
150	***	***	1.913	295.2	295.2	295.2	295.2	295.2	295.2	293.8	293.0	292.7	293.6	294.5	294.3	293.5
160	***	***	1.912	295.2	295.2	295.2	295.2	294.2	295.2	293.6	292.8	292.6	293.5	294.3	294.1	293.3
170	***	***	1.910	295.2	295.2	295.2	295.2	294.2	295.2	293.4	292.7	292.4	293.4	294.3	294.2	293.2
180	***	***	1.909	295.2	295.2	295.2	295.2	294.2	294.2	293.4	292.6	292.4	293.3	294.3	294.1	293.0

COORDINATES

I	R (M)	THETA (DEG)	Z (M)
1	0.0	***	-0.152
2	0.0	***	-0.076
3	0.0	***	0.0
4	0.0	***	0.076
5	0.0	***	0.152
6	0.0	***	0.229
7	0.0	***	0.530
8	0.0	***	0.610
9	0.0	***	0.686
10	0.0	***	0.762
11	0.0	***	0.838
12	0.0	***	0.914
13	0.0	***	0.991

Table 17B — Inferred Pressurant Distribution, Scaling Run 39, Test Configuration 3: Three 1.52-cm Nozzles [(J) indicates thermocouples on an inlet jet centerline]

t (s)	$\bar{T}$ (°C)	$\bar{T}_s$ (°C)	$\bar{T}_p$ (°C)	β	β/θ	$\bar{X}$	Pressurant Fractions (X) at Locations I: 1	2	3(J)	4	5	6	7	8	9	10	11	12(J)	13
COMMENCE VALVE OPENING																			
0.0	18.2	18.2	61.3	3.7	0.0000	0.000	0.000	0.000	0.000	0.000	0.000	0.000	0.000	0.000	0.000	0.000	0.000	0.000	
1.0	20.5	20.4	22.0	174.3	10.1760	.057	-.763	-.143	-1.382	-1.382	-1.382	-.763	.104	.909	.600	.971	1.776	1.776	.414
VALVE FULLY OPEN																			
2.0	24.7	25.4	20.4	33.7	3.2064	.143	-.053	.344	.841	.344	.146	.146	.086	-.073	.126	-.113	.106	-.013	-.033
3.0	27.7	30.2	18.2	13.1	1.0131	.206	.084	.252	.420	.252	.168	.168	.168	.159	.243	.126	.252	.218	.176
4.0	29.3	33.2	18.1	12.9	.8959	.260	.137	.270	.468	.236	.236	.236	.223	.236	.283	.197	.329	.296	.230
5.0	30.1	35.2	18.5	13.2	.8256	.305	.181	.362	.542	.241	.241	.241	.272	.272	.314	.253	.398	.380	.266
6.0	30.9	37.0	19.1	11.5	.6320	.342	.216	.383	.551	.272	.272	.328	.300	.294	.328	.300	.467	.422	.316
7.0	31.1	38.0	19.6	12.6	.6512	.375	.292	.427	.589	.319	.319	.319	.319	.319	.340	.308	.492	.481	.356
8.0	31.3	38.9	20.0	12.5	.5778	.403	.303	.462	.622	.356	.356	.356	.345	.340	.361	.340	.531	.494	.377
COMMENCE VALVE CLOSURE																			
9.0	31.4	39.5	20.5	12.3	.5195	.428	.335	.466	.650	.387	.335	.361	.366	.377	.387	.372	.560	.545	.424
10.0	31.[illegible]	39.6	20.7	9.2	.5551	.450	.340	.455	.638	.393	.393	.353	.377	.383	.398	.383	.600	.600	.436
VALVE FULLY CLOSED																			
11.0	30.7	39.2	20.6	3.1	.1858	.455	.405	.512	.647	.378	.405	.378	.399	.416	.416	.426	.545	.550	.442
12.0	29.9	38.0	20.3	2.6	.1574	.455	.411	.468	.581	.411	.411	.411	.411	.423	.428	.440	.536	.541	.445
13.0	29.3	37.1	20.0	2.2	.1335	.455	.408	.467	.525	.408	.408	.408	.426	.437	.455	.467	.531	.525	.455
14.0	29.0	36.6	19.9	1.2	.0695	.455	.396	.456	.516	.396	.426	.396	.426	.438	.468	.486	.528	.528	.456
15.0	28.7	36.2	19.8	1.2	.0715	.455	.375	.436	.497	.436	.436	.436	.430	.436	.479	.473	.515	.515	.454
16.0	28.4	35.7	19.7	1.2	.0736	.455	.413	.444	.507	.413	.444	.413	.438	.438	.475	.482	.507	.500	.444
17.0	28.1	35.2	19.6	1.3	.0759	.455	.367	.450	.514	.450	.450	.450	.425	.438	.463	.476	.489	.489	.438
18.0	28.0	35.0	19.5	.6	.0388	.455	.377	.442	.506	.442	.442	.442	.442	.442	.481	.487	.487	.487	.442
19.0	27.6	34.5	19.4	1.3	.0795	.455	.428	.461	.494	.428	.428	.428	.441	.441	.487	.494	.474	.474	.441
20.0	27.5	34.3	19.3	.7	.0407	.455	.403	.470	.470	.470	.470	.403	.436	.436	.490	.503	.463	.463	.443
21.0	27.3	34.1	19.3	.7	.0414	.455	.391	.458	.458	.458	.458	.458	.452	.438	.492	.499	.458	.458	.438
22.0	27.2	33.8	19.2	.7	.0421	.455	.450	.450	.450	.450	.450	.450	.450	.436	.491	.504	.450	.456	.436
23.0	26.9	33.4	19.1	1.4	.0863	.455	.441	.441	.441	.441	.441	.441	.448	.448	.497	.511	.455	.462	.455
24.0	26.7	33.1	19.1	.7	.0443	.455	.421	.492	.492	.421	.421	.421	.442	.442	.506	.527	.442	.456	.435
25.0	26.7	33.1	19.1	0.0	0.0000	.455	.467	.467	.467	.467	.467	.396	.432	.446	.489	.524	.432	.432	.432
26.0	26.4	32.7	19.0	1.5	.0910	.455	.454	.454	.454	.454	.454	.454	.440	.447	.505	.542	.418	.425	.418
27.0	26.4	32.7	19.0	0.0	0.0000	.455	.447	.447	.447	.447	.447	.447	.454	.461	.505	.534	.425	.432	.425
28.0	26.3	32.4	18.9	.8	.0468	.455	.425	.425	.498	.498	.498	.425	.454	.447	.491	.513	.402	.417	.425
29.0	26.1	32.2	18.8	.8	.0477	.455	.414	.414	.489	.489	.489	.489	.451	.444	.496	.504	.399	.429	.414
30.0	26.0	32.0	18.8	.8	.0486	.455	.397	.473	.473	.473	.473	.473	.458	.450	.496	.526	.397	.412	.420
31.0	26.0	32.0	18.8	0.0	0.0000	.455	.385	.461	.461	.461	.461	.461	.476	.461	.506	.544	.407	.415	.423
32.0	25.7	31.5	18.7	1.7	.1002	.455	.449	.449	.449	.449	.449	.449	.473	.457	.520	.543	.402	.410	.418
33.0	25.5	31.2	18.6	.9	.0516	.455	.446	.446	.446	.446	.446	.446	.483	.461	.525	.549	.398	.414	.414
34.0	25.5	31.2	18.6	0.0	0.0000	.455	.436	.436	.436	.436	.436	.436	.483	.475	.547	.555	.412	.404	.428

Table 18A — Scaling Run 40, Test Configuration 3: Three 1.52-cm Nozzles
[(J) indicates thermocouples on an inlet jet centerline]

t (s)	Press Tank P (atm)	T_s (K)	Chamber P (atm)	Chamber Absolute Temperatures (K) at Locations 1												
				1	2	3(J)	4	5	6	7	8	9	10	11	12(J)	13
-5	***	***	1.033	292.2	292.2	292.2	292.2	292.2	292.2	290.6	289.8	289.5	290.5	290.7	290.4	290.1
-4	***	***	1.033	292.2	292.2	292.2	292.2	292.2	292.2	290.6	289.8	289.5	290.5	290.6	290.4	290.2
-3	***	***	1.033	292.2	292.2	292.2	292.2	292.2	292.2	290.5	289.8	289.5	290.5	290.7	290.4	290.2
-2	***	***	1.034	292.2	292.2	292.2	292.2	292.2	292.2	290.6	289.8	289.5	290.5	290.8	290.5	290.4
-1	***	***	1.033	292.2	292.2	292.2	292.2	292.2	292.2	290.7	289.8	289.5	290.5	290.6	290.6	290.4
0	6.280	293.2	1.033	292.2	292.2	292.2	292.2	292.2	292.2	290.7	289.9	289.5	290.5	290.7	290.6	290.4
1	6.302	293.2	1.034	292.2	292.2	292.2	292.2	292.2	292.2	290.6	290.0	289.6	290.6	291.5	290.8	290.2
2	6.053	310.2	1.124	293.2	293.2	294.2	292.2	293.2	293.2	293.6	294.4	293.3	295.2	295.4	295.5	294.0
3	5.685	272.2	1.243	295.7	298.7	295.7	298.2	298.7	298.2	297.9	298.1	296.7	299.1	297.4	298.4	298.1
4	5.389	270.2	1.362	303.2	302.2	299.2	302.2	302.2	302.2	300.5	300.2	299.2	301.2	299.8	300.1	300.3
5	5.113	268.7	1.466	305.7	302.7	300.2	304.2	304.7	303.7	302.4	302.0	300.9	302.8	300.7	301.0	302.2
6	4.852	268.2	1.562	306.2	303.2	301.2	305.2	305.2	305.2	303.5	302.8	301.8	303.5	301.4	300.9	303.0
7	4.623	266.7	1.653	306.2	303.7	300.7	306.2	306.2	305.7	304.1	303.3	302.6	304.0	301.0	300.9	303.4
8	4.421	266.2	1.739	306.2	304.2	301.2	306.2	306.2	306.2	304.5	303.7	303.0	304.4	301.0	301.4	303.9
9	4.171	265.2	1.821	307.2	304.2	301.2	306.2	306.2	306.2	304.8	303.9	303.5	304.8	301.2	301.9	304.0
10	3.983	265.2	1.898	306.2	303.7	301.2	306.2	306.2	306.2	304.9	304.2	303.5	304.7	301.1	302.0	304.4
11	3.766	264.2	1.971	306.2	304.2	301.2	305.2	306.2	306.2	305.1	304.1	303.7	304.8	301.3	301.0	304.2
12	3.774	258.7	1.984	305.7	304.2	301.2	305.2	305.7	305.7	304.5	303.5	303.1	304.0	302.0	301.8	303.5
13	3.759	264.2	1.978	305.2	304.2	302.2	305.2	305.2	305.2	303.9	302.7	302.4	303.3	302.1	302.0	303.3
14	***	***	1.975	304.7	303.7	302.2	304.2	304.7	305.2	303.2	302.2	302.0	302.9	301.8	301.8	302.8
15	***	***	1.972	304.2	303.2	302.2	304.2	304.2	304.2	302.6	302.0	301.4	302.3	301.5	301.5	302.5
16	***	***	1.969	304.2	303.2	302.2	304.2	304.2	304.2	302.6	301.7	300.9	301.6	301.3	301.3	302.0
17	***	***	1.968	303.7	303.2	302.2	303.7	303.7	304.2	302.4	301.4	300.9	301.3	301.2	301.0	301.7
18	***	***	1.966	303.2	303.2	302.2	303.2	303.2	303.2	302.2	301.2	300.3	301.0	301.0	300.8	301.3
19	***	***	1.965	303.2	302.7	302.2	303.2	303.2	303.2	301.7	301.0	300.1	300.6	300.9	300.7	301.0
20	***	***	1.964	303.2	302.2	302.2	303.2	303.2	303.2	301.2	300.6	299.7	300.3	300.8	300.4	300.6
21	***	***	1.962	303.2	302.2	302.2	302.2	302.2	303.2	301.0	300.3	299.3	300.0	300.7	300.3	300.4
26	***	***	1.957	301.2	301.2	301.2	301.2	301.2	301.7	299.7	299.0	298.1	298.5	299.6	299.1	299.0
31	***	***	1.952	300.2	300.2	300.2	300.2	300.2	300.2	298.5	297.8	296.8	297.2	298.8	298.1	298.0
36	***	***	1.949	299.7	299.2	299.2	299.2	299.2	299.2	297.8	297.0	296.2	296.7	298.2	297.5	297.4
41	***	***	1.946	299.2	299.2	299.2	299.2	298.2	298.2	297.1	296.5	295.5	296.3	297.8	297.4	296.9
46	***	***	1.942	298.2	298.2	298.2	298.2	298.2	298.2	296.7	296.0	295.2	296.1	297.5	297.2	296.5
51	***	***	1.940	298.2	298.2	298.2	298.2	298.2	298.2	296.5	295.7	295.0	295.8	297.3	296.8	296.2
56	***	***	1.937	298.2	298.2	298.2	297.2	297.2	298.2	296.0	295.3	294.5	295.5	296.9	296.5	295.7
61	***	***	1.936	297.2	298.2	297.2	297.2	297.2	297.2	295.7	295.0	294.3	295.2	296.5	296.1	295.2
66	***	***	1.934	297.2	297.2	297.2	297.2	297.2	297.2	295.4	294.8	294.0	294.9	296.2	295.9	295.1
71	***	***	1.932	297.2	297.2	297.2	297.2	296.2	297.2	295.2	294.5	293.8	294.7	296.0	295.5	294.9
81	***	***	1.929	296.2	297.2	296.2	296.2	296.2	296.2	294.8	294.2	293.5	294.4	295.5	295.2	294.5
91	***	***	1.926	296.2	296.2	296.2	296.2	296.2	296.2	294.5	293.8	293.3	294.2	295.2	295.0	294.2
101	***	***	1.924	296.2	296.2	296.2	296.2	295.2	296.2	294.3	293.5	293.1	293.9	295.0	294.7	294.0
111	***	***	1.921	295.2	296.2	296.2	295.2	295.2	295.2	294.0	293.3	292.8	293.8	294.6	294.3	293.8
121	***	***	1.919	295.2	296.2	296.2	295.2	295.2	295.2	293.8	293.1	292.6	293.7	294.5	294.4	293.5
131	***	***	1.918	295.2	296.2	296.2	295.2	295.2	295.2	293.7	293.0	292.5	293.5	294.4	294.2	293.5
141	***	***	1.916	295.2	295.2	295.2	295.2	295.2	295.2	293.5	292.8	292.4	293.4	294.2	294.2	293.4
151	***	***	1.915	295.2	295.2	295.2	295.2	295.2	295.2	293.4	292.8	292.4	293.3	294.3	294.1	293.2
161	***	***	1.913	295.2	295.2	295.2	295.2	294.2	295.2	293.3	292.6	292.2	293.2	294.2	294.0	293.1
171	***	***	1.912	295.2	295.2	295.2	295.2	294.2	294.2	293.2	292.4	292.2	293.1	294.2	293.9	293.1
181	***	***	1.911	294.2	295.2	295.2	295.2	294.2	294.2	293.1	292.4	292.0	293.1	294.0	293.9	292.8

I	COORDINATES R (M)	THETA (DEG)	Z (M)
1	0.0	***	-0.152
2	0.0	***	-0.076
3	0.0	***	0.0
4	0.0	***	0.076
5	0.0	***	0.152
6	0.0	***	0.229
7	0.0	***	0.530
8	0.0	***	0.610
9	0.0	***	0.686
10	0.0	***	0.762
11	0.0	***	0.838
12	0.0	***	0.914
13	0.0	***	0.991

Table 18B — Inferred Pressurant Distribution, Scaling Run 40, Test Configuration 3: Three 1.52-cm Nozzles [(J) indicates thermocouples on an inlet jet centerline]

t (s)	$\bar{T}$ (°C)	$\bar{T}_a$ (°C)	$\bar{T}_p$ (°C)	β	β/θ	$\bar{X}$	1	2	3(J)	4	5	6	7	8	9	10	11	12(J)	13
						Pressurant Fractions (X) at Locations I													
CONMENCE VALVE OPENING																			
0.0	18.0	18.0	144.5	.1	0.0000	0.000	0.000	0.000	0.000	0.000	0.000	0.000	0.000	0.000	0.000	0.000	0.000	0.000	
1.0	18.1	18.1	20.0	642.7	.4519	.001	-.039	-.039	-.039	-.039	-.039	-.039	-.091	.013	.013	.013	.375	.064	-.143
VALVE FULLY OPEN																			
2.0	20.8	20.3	28.5	157.2	11.6253	.072	-.153	.090	-.032	-.274	-.153	-.153	.078	.272	.187	.296	.296	.320	.162
3.0	24.9	25.2	23.3	34.8	3.1978	.153	-.185	.358	1.989	.630	.358	.630	-.022	-.566	-.022	-.783	.290	-.348	-.294
4.0	27.8	29.9	19.9	12.8	.9868	.216	.092	.192	.492	.192	.192	.192	.212	.162	.222	.122	.292	.242	.202
5.0	29.4	33.1	19.2	12.3	.8407	.268	.114	.330	.510	.222	.186	.258	.244	.215	.265	.200	.366	.337	.236
6.0	30.1	35.0	19.2	12.9	.7830	.311	.193	.382	.508	.256	.256	.256	.268	.262	.300	.256	.401	.426	.281
7.0	30.5	36.4	19.5	13.0	.7209	.348	.260	.407	.585	.260	.260	.289	.295	.295	.313	.289	.478	.478	.319
8.0	30.8	37.5	19.8	12.4	.6143	.380	.313	.426	.596	.313	.313	.313	.319	.325	.342	.319	.522	.494	.342
9.0	31.1	38.5	20.2	12.1	.5474	.407	.301	.465	.629	.356	.356	.356	.351	.356	.356	.340	.547	.504	.378
CONMENCE VALVE CLOSURE																			
10.0	31.0	39.0	20.5	13.1	.5451	.431	.378	.513	.649	.378	.378	.378	.367	.361	.372	.367	.573	.519	.378
11.0	30.9	39.3	20.8	718.1	.5032	.453	.394	.502	.664	.448	.394	.394	.372	.383	.383	.378	.578	.389	.405
VALVE FULLY CLOSED																			
12.0	30.7	39.0	20.7	198.3	.1395	.457	.411	.493	.657	.438	.411	.411	.395	.405	.405	.411	.531	.536	.433
13.0	29.7	37.7	20.3	267.6	.1883	.457	.423	.481	.596	.423	.423	.423	.411	.435	.429	.435	.515	.515	.429
14.0	29.3	37.0	20.1	141.8	.0998	.457	.426	.485	.574	.453	.426	.396	.426	.438	.426	.432	.515	.509	.432
15.0	28.8	36.3	19.9	147.7	.1039	.457	.431	.492	.554	.431	.431	.431	.425	.425	.437	.450	.505	.499	.425
16.0	28.4	35.6	19.7	154.1	.1084	.457	.418	.481	.545	.418	.418	.418	.425	.431	.456	.475	.507	.500	.444
17.0	28.2	35.4	19.7	52.9	.0372	.457	.435	.467	.530	.435	.435	.403	.422	.435	.441	.486	.498	.505	.447
18.0	27.9	34.9	19.6	108.2	.0761	.457	.444	.444	.509	.444	.444	.444	.412	.425	.457	.477	.490	.496	.451
19.0	27.7	34.7	19.5	55.4	.0390	.457	.433	.466	.499	.433	.433	.433	.433	.420	.459	.492	.486	.492	.459
20.0	27.6	34.4	19.4	56.3	.0396	.457	.417	.484	.484	.417	.417	.417	.451	.437	.471	.497	.477	.497	.471
21.0	27.3	34.0	19.3	115.3	.0811	.457	.397	.466	.466	.466	.466	.397	.438	.445	.479	.493	.466	.493	.466
22.0	27.1	33.7	19.3	59.0	.0415	.457	.445	.445	.445	.445	.445	.445	.431	.445	.473	.507	.452	.486	.473
23.0	27.0	33.5	19.2	60.1	.0423	.457	.427	.427	.497	.427	.427	.427	.455	.448	.483	.511	.455	.483	.476
24.0	26.8	33.3	19.2	61.1	.0430	.457	.416	.416	.487	.416	.416	.416	.459	.459	.487	.537	.452	.494	.480
25.0	26.7	33.0	19.1	62.2	.0438	.457	.398	.398	.470	.470	.470	.398	.456	.441	.484	.527	.456	.484	.484
26.0	26.5	32.8	19.0	63.2	.0445	.457	.447	.447	.447	.447	.447	.410	.447	.439	.476	.519	.454	.483	.476
27.0	26.4	32.6	19.0	64.4	.0453	.457	.432	.432	.432	.432	.432	.432	.454	.446	.491	.535	.454	.483	.483
28.0	26.2	32.3	18.9	65.6	.0461	.457	.403	.403	.477	.477	.477	.403	.440	.448	.485	.537	.440	.477	.470
29.0	26.1	32.1	18.9	66.8	.0470	.457	.391	.391	.467	.467	.467	.429	.451	.444	.489	.550	.436	.474	.482
30.0	25.9	31.9	18.8	68.1	.0479	.457	.378	.378	.455	.455	.455	.455	.455	.447	.509	.547	.447	.478	.478
31.0	25.8	31.6	18.8	69.5	.0489	.457	.438	.438	.438	.438	.438	.438	.453	.445	.492	.539	.438	.476	.469
32.0	25.6	31.4	18.7	70.8	.0498	.457	.433	.433	.433	.433	.433	.433	.457	.457	.496	.551	.433	.472	.472
33.0	25.6	31.4	18.7	0.0	0.0000	.457	.415	.415	.415	.455	.494	.415	.463	.455	.494	.542	.431	.471	.471
34.0	25.4	31.1	18.7	72.3	.0508	.457	.402	.402	.402	.482	.482	.482	.450	.442	.490	.538	.426	.466	.474

Table 19A — Scaling Run 41, Test Configuration 3: Three 1.52-cm Nozzles
[(J) indicates thermocouples on an inlet jet centerline]

t (s)	Press Tank P (atm)	T_t (K)	Chamber P (atm)	Chamber Absolute Temperatures (K) at Locations I: 1	2	3(J)	4	5	6	7	8	9	10	11	12(J)	13
-5	***	***	1.032	292.2	292.2	292.2	292.2	292.2	292.2	290.5	289.7	289.4	290.4	290.5	290.4	290.2
-4	***	***	1.032	292.2	292.2	292.2	292.2	292.2	292.2	290.5	289.7	289.4	290.4	290.6	290.4	290.1
-3	***	***	1.032	292.2	292.2	292.2	292.2	292.2	292.2	290.5	289.7	289.4	290.4	290.5	290.4	290.0
-2	***	***	1.032	292.2	292.2	292.2	292.2	292.2	292.2	290.5	289.7	289.5	290.4	290.5	290.4	290.0
-1	***	***	1.032	292.2	292.2	292.2	292.2	292.2	292.2	290.4	289.7	289.5	290.4	290.5	290.3	290.1
0	6.316	292.2	1.032	292.2	292.2	292.2	292.2	292.2	292.2	290.5	289.7	289.4	290.4	290.5	290.1	290.1
1	6.282	292.2	1.041	292.2	292.2	292.2	292.2	292.2	292.2	290.6	291.4	290.4	291.3	295.8	294.3	290.7
2	5.947	283.7	1.169	297.7	296.7	295.2	295.7	296.7	296.7	295.5	295.8	294.6	296.4	295.8	295.8	295.7
3	5.609	270.2	1.289	302.2	300.2	298.2	300.2	301.2	300.2	299.1	298.8	297.5	299.7	298.6	298.8	299.1
4	5.297	270.2	1.398	304.2	302.2	299.2	302.2	303.2	302.2	301.5	301.0	299.6	302.0	300.0	300.4	301.0
5	5.022	268.7	1.499	305.2	302.7	299.7	304.2	304.7	303.7	303.0	302.3	301.0	303.1	300.6	301.0	302.4
6	4.772	267.2	1.592	306.2	303.2	301.2	305.2	305.2	305.2	303.9	303.2	302.2	304.1	301.2	301.3	303.0
7	4.520	266.2	1.683	306.2	304.2	301.2	306.2	306.2	305.7	304.4	303.8	302.8	304.4	300.9	300.9	303.3
8	4.327	265.2	1.767	306.2	303.2	301.2	306.2	306.2	306.2	304.5	303.7	303.1	304.5	301.3	300.9	303.5
9	4.088	265.2	1.848	306.2	303.7	300.7	306.2	306.2	306.2	304.8	303.8	303.6	304.8	300.9	301.5	303.7
10	3.928	265.2	1.924	306.2	303.2	301.2	306.2	306.2	306.2	305.2	303.5	303.3	304.4	300.4	300.7	303.7
11	3.732	264.2	1.988	306.2	304.2	300.2	305.2	306.2	306.2	304.0	303.5	303.1	304.0	300.5	300.4	303.4
12	3.776	260.2	1.982	305.2	304.2	301.7	305.2	305.2	305.2	304.2	303.0	302.4	303.2	301.0	301.0	302.9
13	3.781	266.2	1.978	305.2	304.2	302.2	305.2	304.2	305.2	303.6	302.5	302.0	302.7	301.0	301.0	302.5
14	***	***	1.974	304.2	303.2	302.2	304.2	304.2	304.2	303.1	302.4	301.5	302.5	301.0	301.0	302.2
15	***	***	1.971	304.2	303.2	302.2	304.2	304.2	304.2	302.8	301.9	301.1	302.0	301.0	301.0	301.9
16	***	***	1.969	304.2	303.2	302.2	304.2	303.2	304.2	302.4	301.5	301.0	301.7	300.9	300.9	301.6
17	***	***	1.967	303.2	302.7	302.2	303.2	303.2	303.2	302.0	301.2	300.5	301.4	300.9	300.9	301.4
18	***	***	1.966	303.2	302.2	301.2	303.2	303.2	303.2	301.8	301.0	300.2	300.9	300.9	300.8	301.3
19	***	***	1.965	302.7	302.2	301.2	302.7	302.2	303.2	301.5	300.7	300.0	300.9	300.8	300.6	301.0
20	***	***	1.963	302.2	302.2	301.2	302.2	302.2	302.2	301.2	300.6	299.6	300.4	300.6	300.5	300.9
21	***	***	1.962	302.2	301.7	301.2	302.2	302.2	302.2	301.1	300.3	299.5	300.3	300.5	300.3	300.6
26	***	***	1.957	300.7	300.2	300.2	300.7	300.7	301.2	299.7	299.2	298.5	299.3	300.0	299.7	299.6
31	***	***	1.952	299.7	299.2	299.2	299.2	299.2	300.2	298.5	298.0	297.0	297.5	299.0	298.9	298.6
36	***	***	1.948	298.7	299.2	299.2	298.7	299.2	299.2	297.7	297.1	296.0	296.9	298.1	297.8	297.4
41	***	***	1.945	298.2	298.2	298.2	298.2	298.2	299.2	297.4	296.7	295.8	296.5	297.6	297.1	296.7
46	***	***	1.942	298.2	298.2	298.2	298.2	298.2	298.2	297.0	296.5	295.4	296.0	297.4	296.8	296.3
51	***	***	1.939	298.2	298.2	298.2	298.2	298.2	298.2	296.8	295.9	295.0	295.4	297.1	296.6	296.0
56	***	***	1.938	298.2	298.2	298.2	297.2	297.2	297.2	296.2	295.5	294.7	295.2	296.7	296.3	295.6
61	***	***	1.936	297.2	297.2	297.2	297.2	297.2	297.2	295.9	295.2	294.3	295.0	296.4	295.9	295.2
66	***	***	1.933	297.2	297.2	297.2	297.2	297.2	297.2	295.5	294.9	294.0	294.6	296.0	295.7	295.0
71	***	***	1.932	297.2	297.2	297.2	296.2	296.2	297.2	295.3	294.5	293.8	294.5	295.6	295.3	294.7
81	***	***	1.928	296.2	297.2	296.2	296.2	296.2	296.2	294.8	294.2	293.4	294.4	295.2	295.0	294.5
91	***	***	1.926	296.2	296.2	296.2	296.2	296.2	296.2	294.4	293.8	293.2	294.0	295.0	294.8	294.2
101	***	***	1.923	296.2	296.2	296.2	295.2	295.2	295.2	294.1	293.4	292.9	293.8	294.6	294.5	293.9
111	***	***	1.921	295.2	296.2	296.2	295.2	295.2	295.2	293.8	293.2	292.8	293.7	294.4	294.3	293.5
121	***	***	1.919	295.2	296.2	296.2	295.2	295.2	295.2	293.8	293.0	292.6	293.5	294.4	294.1	293.5
131	***	***	1.917	295.2	295.2	295.2	295.2	295.2	295.2	293.6	292.9	292.4	293.3	294.2	294.0	293.3
141	***	***	1.916	295.2	295.2	295.2	295.2	294.2	295.2	293.4	292.7	292.3	293.2	294.1	293.9	293.2
151	***	***	1.915	294.2	295.2	295.2	295.2	294.2	295.2	293.2	292.6	292.2	293.1	294.1	293.8	293.1
161	***	***	1.913	294.2	295.2	295.2	294.2	294.2	294.2	293.1	292.4	292.0	293.1	293.9	293.8	292.7
171	***	***	1.912	294.2	295.2	295.2	294.2	294.2	294.2	293.0	292.3	292.0	292.9	293.9	293.8	292.9
181	***	***	1.911	294.2	295.2	295.2	294.2	294.2	294.2	292.9	292.2	291.9	292.9	293.8	293.8	292.5

COORDINATES

I	R (M)	THETA (DEG)	Z (M)
1	0.0	***	-0.152
2	0.0	***	-0.076
3	0.0	***	0.0
4	0.0	***	0.076
5	0.0	***	0.152
6	0.0	***	0.229
7	0.0	***	0.530
8	0.0	***	0.610
9	0.0	***	0.686
10	0.0	***	0.762
11	0.0	***	0.838
12	0.0	***	0.914
13	0.0	***	0.991

Table 19B — Inferred Pressurant Distribution, Scaling Run 41, Test Configuration 3: Three 1.52-cm Nozzles [(J) indicates thermocouples on an inlet jet centerline]

t (s)	$\bar{T}$ (°C)	$\bar{T}_s$ (°C)	$\bar{T}_p$ (°C)	β	β/θ	$\bar{X}$	1	2	3(J)	4	5	6	7	8	9	10	11	12(J)	13
						Pressurant Fractions (X) at Locations I													
COMMENCE VALVE OPENING																			
0.0	17.9	17.9	75.2	.4	0.0000	0.000	0.000	0.000	0.000	0.000	0.000	0.000	0.000	0.000	0.000	0.000	0.000	0.000	
1.0	18.9	18.9	19.7	-438.2	-2.2096	.005	-1.430	-1.430	-1.430	-1.430	-1.430	-1.430	-1.295	.868	-.078	-.213	5.734	4.247	-.619
VALVE FULLY OPEN																			
2.0	22.8	23.2	19.9	59.1	6.0688	.102	-.063	.240	.694	.542	.240	.240	.088	-.245	.028	-.215	-.003	-.124	-.093
3.0	26.3	28.0	18.3	18.4	1.5768	.176	.018	.223	.428	.223	.120	.223	.161	.110	.212	.089	.212	.151	.120
4.0	28.3	31.6	17.9	13.8	1.0302	.235	.120	.263	.477	.263	.192	.263	.192	.170	.249	.149	.291	.242	.192
5.0	29.4	33.9	18.0	13.3	.8749	.284	.191	.348	.536	.254	.223	.285	.223	.216	.279	.210	.373	.323	.235
6.0	30.3	35.9	18.5	11.8	.6759	.324	.233	.405	.520	.290	.290	.290	.267	.261	.302	.250	.422	.393	.290
7.0	30.7	37.2	19.0	12.4	.6748	.360	.294	.403	.568	.294	.294	.321	.299	.288	.327	.294	.491	.469	.338
8.0	30.7	38.0	19.4	13.1	.6359	.390	.328	.489	.596	.328	.328	.328	.322	.328	.344	.322	.505	.500	.355
9.0	30.8	38.7	19.8	12.5	.5575	.417	.361	.494	.652	.361	.361	.361	.345	.356	.351	.340	.552	.499	.382
COMMENCE VALVE CLOSURE																			
10.0	30.7	39.0	20.2	13.6	.5532	.440	.378	.538	.644	.378	.378	.378	.341	.367	.383	.378	.596	.559	.399
11.0	30.5	39.0	20.5	95.5	.4827	.458	.384	.492	.708	.438	.384	.384	.367	.394	.400	.405	.600	.583	.421
VALVE FULLY CLOSED																			
12.0	30.2	38.6	20.3	4.9	.0249	.457	.422	.477	.614	.422	.422	.422	.383	.405	.422	.433	.559	.531	.433
13.0	29.6	37.6	20.1	25.1	.1271	.457	.407	.464	.578	.407	.464	.407	.402	.419	.430	.447	.550	.527	.441
14.0	29.0	36.7	19.8	26.5	.1339	.457	.439	.499	.558	.439	.439	.439	.404	.398	.428	.434	.528	.505	.434
15.0	28.5	36.0	19.6	20.8	.1053	.457	.430	.491	.552	.430	.430	.430	.411	.417	.448	.454	.515	.497	.442
16.0	28.2	35.6	19.5	14.4	.0728	.457	.416	.478	.540	.416	.478	.416	.422	.428	.440	.459	.515	.490	.447
17.0	27.9	35.1	19.4	14.8	.0750	.457	.453	.485	.517	.453	.453	.453	.415	.421	.447	.453	.491	.466	.434
18.0	27.8	34.9	19.3	7.6	.0384	.457	.438	.503	.567	.438	.438	.438	.419	.419	.451	.471	.477	.458	.426
19.0	27.6	34.6	19.3	7.7	.0389	.457	.453	.486	.551	.453	.486	.421	.421	.421	.447	.453	.473	.453	.427
20.0	27.3	34.2	19.2	15.8	.0797	.457	.468	.468	.535	.468	.468	.468	.421	.408	.455	.468	.461	.441	.415
21.0	27.2	33.9	19.1	8.1	.0409	.457	.458	.491	.525	.458	.458	.458	.417	.424	.451	.471	.458	.451	.424
22.0	27.0	33.7	19.1	8.2	.0415	.457	.450	.518	.518	.450	.450	.450	.423	.416	.464	.470	.464	.443	.429
23.0	26.9	33.5	19.0	8.4	.0422	.457	.446	.515	.515	.446	.446	.446	.425	.425	.459	.480	.459	.446	.439
24.0	26.7	33.2	18.9	8.5	.0430	.457	.492	.492	.492	.492	.492	.422	.429	.415	.450	.471	.443	.436	.422
25.0	26.5	33.0	18.9	8.6	.0437	.457	.481	.481	.551	.481	.481	.410	.438	.417	.459	.474	.431	.424	.417
26.0	26.4	32.8	18.8	8.8	.0445	.457	.486	.522	.522	.486	.486	.451	.436	.415	.443	.458	.415	.408	.415
27.0	26.2	32.5	18.8	9.0	.0453	.457	.508	.508	.508	.508	.508	.435	.435	.413	.457	.471	.398	.398	.398
28.0	26.1	32.3	18.7	9.1	.0461	.457	.494	.494	.494	.494	.494	.457	.435	.420	.465	.487	.406	.391	.413
29.0	25.9	32.1	18.7	9.3	.0470	.457	.483	.483	.483	.483	.483	.483	.446	.416	.476	.505	.401	.386	.416
30.0	25.8	31.8	18.6	9.5	.0479	.457	.467	.467	.542	.467	.467	.467	.444	.421	.489	.512	.406	.391	.406
31.0	25.6	31.6	18.6	9.7	.0488	.457	.476	.514	.514	.514	.514	.437	.437	.406	.468	.499	.391	.376	.399
32.0	25.6	31.6	18.6	0.0	0.0000	.457	.499	.499	.499	.499	.499	.422	.438	.415	.468	.507	.399	.384	.415
33.0	25.3	31.1	18.5	19.9	.1006	.457	.490	.490	.490	.490	.490	.451	.443	.419	.474	.506	.395	.395	.411
34.0	25.3	31.1	18.5	0.0	0.0000	.457	.480	.480	.480	.480	.480	.480	.441	.425	.488	.504	.401	.393	.409
XXX																			

Table 20A — Scaling Run 42, Test Configuration 2: Two 1.52-cm Nozzles
[(J) indicates thermocouples on an inlet jet centerline]

t (s)	Press Tank P (atm)	T_i (K)	Chamber P (atm)	Chamber Absolute Temperatures (K) at Locations I: 1	2	3(J)	4	5	6	7	8	9	10	11	12	13
-5	***	***	1.029	292.2	292.2	292.2	292.2	292.2	292.2	291.0	290.1	289.8	290.9	290.9	290.7	290.5
-4	***	***	1.028	292.2	292.2	292.2	292.2	292.2	292.2	291.0	290.1	289.8	290.9	290.9	290.7	290.7
-3	***	***	1.029	292.2	292.2	292.2	292.2	292.2	292.2	291.0	290.1	289.9	290.9	290.9	290.6	290.7
-2	***	***	1.029	292.2	292.2	292.2	292.2	292.2	292.2	291.0	290.2	289.8	290.9	291.0	290.7	290.7
-1	***	***	1.029	292.2	292.2	292.2	292.2	292.2	292.2	291.0	290.1	289.9	290.8	291.0	290.7	290.7
0	6.292	293.2	1.029	292.2	292.2	292.2	292.2	292.2	292.2	291.0	290.1	289.8	290.9	291.0	290.8	290.8
1	6.291	293.2	1.029	292.2	292.2	292.2	292.2	292.2	292.2	291.0	290.1	289.9	290.9	290.7	290.9	290.7
2	6.114	290.7	1.067	294.7	295.2	293.7	293.7	293.7	294.7	292.8	292.9	292.0	293.1	292.9	292.5	292.3
3	5.862	273.2	1.175	299.2	297.2	294.2	297.2	298.2	298.2	296.1	295.9	294.6	296.0	295.8	295.6	295.5
4	5.688	272.7	1.255	301.2	299.7	296.2	300.2	300.2	300.2	298.4	297.8	296.7	298.3	298.3	297.9	297.5
5	5.468	272.2	1.328	302.2	300.2	298.2	302.2	302.2	302.2	299.9	299.3	298.1	299.5	299.5	299.1	298.9
6	5.252	271.2	1.399	303.2	301.2	298.2	303.2	303.2	302.2	301.2	300.5	299.2	300.9	300.7	300.3	300.0
7	5.004	270.2	1.487	304.2	301.7	298.2	303.2	303.2	303.2	302.0	301.1	300.3	301.9	301.8	301.4	301.2
8	4.847	269.2	1.530	304.2	302.2	299.2	304.2	304.2	304.2	302.5	301.5	300.8	302.2	302.1	301.7	301.5
9	4.698	268.7	1.611	304.2	302.2	299.2	304.2	304.2	304.2	302.9	301.7	301.2	302.4	302.3	302.0	301.7
10	4.534	268.2	1.648	304.2	302.2	299.2	304.2	304.2	304.2	302.9	302.0	301.4	302.4	302.4	302.2	302.1
11	4.389	268.2	1.724	304.2	302.2	299.2	304.2	304.2	304.2	302.9	302.0	301.5	302.7	302.5	302.3	302.2
12	4.227	267.2	1.780	304.2	302.2	299.2	304.2	304.2	304.2	302.9	302.0	301.3	302.6	302.5	302.4	302.3
13	4.067	267.2	1.832	304.2	302.2	299.2	304.2	304.2	304.2	303.0	302.1	301.5	302.5	302.5	302.4	302.3
14	3.951	267.2	1.883	304.2	301.7	299.2	304.2	304.2	304.2	302.6	301.8	301.5	302.4	302.4	302.3	302.2
15	3.857	267.2	1.932	304.2	301.2	298.2	304.2	304.2	304.2	302.5	301.7	301.5	302.4	302.4	302.2	301.9
16	3.707	267.2	1.981	303.7	301.2	298.2	303.2	304.2	304.2	302.4	301.6	301.2	302.3	302.2	302.1	302.0
17	3.604	266.2	2.018	303.2	301.2	298.2	303.2	303.2	303.2	302.4	301.3	301.0	301.9	302.2	301.9	301.9
18	3.614	259.2	2.021	303.2	302.2	299.2	303.2	303.2	303.2	302.0	300.9	300.6	301.3	301.5	301.3	301.3
19	***	***	2.018	302.7	301.7	300.2	302.2	302.7	303.2	301.5	300.5	300.2	301.0	301.2	301.0	300.9
20	***	***	2.015	302.2	301.2	300.2	302.2	302.2	302.2	301.2	300.4	300.0	300.8	300.9	300.7	300.6
21	***	***	2.014	302.2	301.2	300.2	302.2	302.2	302.2	301.1	300.2	299.9	300.5	300.7	300.4	300.3
22	***	***	2.012	302.2	301.2	300.2	301.2	302.2	302.2	300.6	300.0	299.5	300.2	300.6	300.2	300.2
23	***	***	2.011	302.2	301.2	300.2	301.2	301.2	302.2	300.5	299.8	299.0	299.7	300.3	300.0	300.0
24	***	***	2.009	301.2	301.2	300.2	301.2	301.2	301.2	300.2	299.2	298.7	299.5	300.0	299.6	299.6
25	***	***	2.008	301.2	301.2	300.2	301.2	301.2	301.2	299.9	299.0	298.3	299.1	299.9	299.5	299.5
26	***	***	2.007	301.2	300.2	300.2	301.2	301.2	301.2	299.8	298.9	298.2	298.9	299.6	299.3	299.3
31	***	***	2.003	300.2	300.2	299.2	300.2	300.2	300.2	298.8	297.7	296.9	297.6	298.8	298.1	298.2
36	***	***	1.999	299.2	299.2	299.2	299.2	299.2	299.2	297.9	297.0	296.1	296.7	297.7	297.3	297.4
41	***	***	1.996	299.2	299.2	299.2	299.2	299.2	299.2	297.3	296.4	295.5	296.2	296.9	296.5	296.7
46	***	***	1.993	298.2	298.2	298.2	298.2	298.2	298.2	296.8	295.9	295.2	295.5	296.4	296.0	296.0
51	***	***	1.991	298.2	298.2	298.2	298.2	298.2	298.2	296.4	295.3	294.7	295.3	295.9	295.6	295.7
56	***	***	1.989	297.2	298.2	298.2	297.2	297.2	298.2	296.1	295.2	294.7	295.4	295.7	295.4	295.3
61	***	***	1.987	297.2	297.2	297.2	297.2	297.2	297.2	295.9	295.0	294.5	295.2	295.5	295.2	295.2
66	***	***	1.985	297.2	297.2	297.2	297.2	297.2	297.2	295.7	294.6	294.3	295.0	295.2	295.0	295.0
71	***	***	1.983	296.2	297.2	297.2	297.2	296.2	297.2	295.3	294.4	293.9	294.7	295.1	294.8	294.6
76	***	***	1.981	296.2	297.2	297.2	296.2	296.2	297.2	295.2	294.2	293.9	294.6	295.0	294.6	294.5
86	***	***	1.979	296.2	296.2	296.2	296.2	296.2	296.2	294.8	294.0	293.7	294.4	294.5	294.4	294.2
96	***	***	1.976	296.2	296.2	296.2	296.2	296.2	296.2	294.4	293.7	293.3	294.1	294.4	294.1	293.9
106	***	***	1.974	295.2	296.2	296.2	295.2	295.2	295.2	294.1	293.3	292.9	293.8	294.0	293.8	293.8
116	***	***	1.972	295.2	296.2	295.2	295.2	295.2	295.2	293.9	293.1	292.9	293.7	293.8	293.7	293.7
126	***	***	1.970	295.2	295.2	295.2	295.2	295.2	295.2	293.8	293.0	292.8	293.5	293.7	293.5	293.5
136	***	***	1.968	295.2	295.2	295.2	295.2	295.2	295.2	293.7	292.9	292.6	293.5	293.5	293.4	293.3
146	***	***	1.967	294.2	295.2	295.2	295.2	294.2	295.2	293.5	292.8	292.4	293.2	293.3	293.3	293.3
156	***	***	1.965	294.2	295.2	295.2	295.2	294.2	295.2	293.3	292.6	292.4	293.2	293.2	293.2	293.0

I	COORDINATES R (M)	THETA (DEG)	Z (M)
1	0.0	***	-0.152
2	0.0	***	-0.076
3	0.0	***	0.0
4	0.0	***	0.076
5	0.0	***	0.152
6	0.0	***	0.229
7	0.0	***	0.530
8	0.0	***	0.610
9	0.0	***	0.686
10	0.0	***	0.762
11	0.0	***	0.838
12	0.0	***	0.914
13	0.0	***	0.991

Table 20B — Inferred Pressurant Distribution, Scaling Run 42, Test Configuration 2: Two 1.52-cm Nozzles [(J) indicates thermocouples on an inlet jet centerline]

t (s)	$\bar{T}$ (°C)	$\bar{T}_a$ (°C)	$\bar{T}_p$ (°C)	β	β/θ	$\bar{X}$.	Pressurant Fractions (X) at Locations I: 1	2	3(J)	4	5	6	7	8	9	10	11	12	13
COMMENCE VALVE OPENING																			
0.0	18.1	18.1	187.5	.0	0.0000	0.000	0.000	0.000	0.000	0.000	0.000	0.000	0.000	0.000	0.000	0.000	0.000	0.000	
1.0	18.1	18.1	20.0	75.9	.0000	0.000	0.000	0.000	0.000	0.000	0.000	0.000	0.000	0.000	0.000	0.000	0.000	0.000	0.000
VALVE FULLY OPEN																			
2.0	20.2	20.2	19.8	178.7	8.5404	.047	-1.146	-2.483	1.528	1.528	1.528	-1.146	.993	-1.948	-.611	-.344	.458	.725	1.528
3.0	23.2	23.9	17.7	38.2	2.5794	.109	-.198	.125	.610	.125	-.037	-.037	.109	-.004	.141	.149	.157	.157	.157
4.0	25.5	27.2	16.2	18.7	1.0926	.159	.068	.143	.460	.098	.098	.098	.153	.125	.189	.153	.171	.180	.198
5.0	26.9	29.6	16.5	16.7	.8650	.202	.108	.261	.414	.108	.108	.108	.192	.170	.231	.215	.223	.238	.246
6.0	27.9	31.3	17.1	16.2	.7934	.240	.151	.292	.503	.151	.151	.222	.207	.193	.257	.222	.243	.257	.271
7.0	28.6	32.8	17.9	16.2	.9483	.283	.180	.347	.581	.247	.247	.247	.247	.247	.280	.247	.260	.273	.280
8.0	29.1	34.0	18.4	14.3	.5686	.311	.247	.376	.569	.247	.247	.247	.279	.286	.305	.292	.305	.318	.324
9.0	29.3	34.6	18.9	16.0	.6115	.337	.281	.409	.600	.281	.281	.281	.301	.307	.313	.313	.332	.332	.345
10.0	29.4	35.1	19.3	15.6	.5374	.359	.311	.438	.628	.311	.311	.311	.318	.318	.331	.343	.350	.350	.350
11.0	29.4	35.4	19.7	15.8	.5188	.380	.336	.462	.653	.336	.336	.336	.342	.342	.348	.348	.367	.367	.367
12.0	29.4	35.7	20.0	16.0	.5125	.400	.354	.482	.673	.354	.354	.354	.361	.361	.380	.374	.386	.380	.380
13.0	29.5	36.0	20.3	15.6	.4463	.416	.373	.501	.693	.373	.373	.373	.373	.373	.386	.392	.399	.399	.405
14.0	29.3	36.0	20.6	16.9	.4718	.433	.380	.542	.705	.380	.380	.380	.406	.400	.393	.413	.419	.413	.413
COMMENCE VALVE CLOSURE																			
15.0	29.2	35.9	20.8	17.4	.4566	.447	.384	.582	.780	.384	.384	.384	.410	.410	.397	.417	.423	.423	.437
16.0	29.0	35.8	21.0	-8715.0	.4628	.461	.417	.587	.790	.451	.384	.384	.424	.417	.417	.424	.438	.431	.431
VALVE FULLY CLOSED																			
17.0	28.7	35.5	21.1	-7648.5	.3902	.472	.442	.581	.790	.442	.442	.442	.414	.428	.421	.442	.428	.435	.428
18.0	29.2	36.1	21.3	1973.9	-.1039	.472	.434	.501	.704	.434	.434	.434	.434	.447	.440	.474	.467	.467	.461
19.0	28.7	35.5	21.1	-1973.9	.1039	.472	.446	.516	.620	.481	.446	.412	.446	.446	.446	.467	.467	.467	.467
20.0	28.3	34.8	20.9	-2059.8	.1085	.472	.457	.529	.601	.457	.457	.457	.443	.436	.436	.464	.464	.464	.464
21.0	28.1	34.6	20.8	-707.1	.0372	.472	.449	.521	.594	.449	.449	.449	.441	.441	.434	.478	.470	.478	.478
22.0	27.8	34.2	20.7	-1446.6	.0761	.472	.433	.508	.582	.508	.433	.433	.448	.441	.448	.485	.463	.478	.470
23.0	27.7	33.9	20.6	-740.3	.0390	.472	.415	.490	.565	.490	.490	.415	.445	.438	.460	.505	.475	.475	.468
24.0	27.4	33.5	20.5	-1516.1	.0798	.472	.463	.463	.540	.463	.463	.463	.448	.456	.463	.494	.463	.479	.471
25.0	27.2	33.3	20.4	-776.7	.0409	.472	.454	.454	.531	.454	.454	.454	.461	.461	.485	.516	.461	.477	.469
26.0	27.1	33.1	20.3	-789.7	.0416	.472	.440	.518	.518	.440	.440	.440	.455	.455	.479	.518	.471	.487	.471
27.0	26.9	32.8	20.3	-803.1	.0423	.472	.429	.509	.509	.429	.429	.429	.469	.461	.509	.517	.469	.493	.477
28.0	26.8	32.6	20.2	-816.9	.0430	.472	.479	.479	.519	.479	.479	.398	.447	.447	.487	.511	.455	.487	.463
29.0	26.6	32.4	20.1	-831.3	.0437	.472	.461	.461	.543	.461	.461	.461	.433	.445	.489	.526	.445	.477	.453
30.0	26.5	32.2	20.1	-846.1	.0446	.472	.450	.450	.533	.450	.450	.430	.458	.458	.491	.533	.458	.483	.466
31.0	26.5	32.2	20.1	0.0	0.0000	.472	.439	.439	.522	.439	.439	.439	.456	.472	.505	.547	.456	.497	.480
32.0	26.3	31.9	20.0	-861.5	.0453	.472	.434	.434	.518	.434	.434	.434	.468	.468	.518	.560	.459	.493	.476
33.0	26.2	31.7	19.9	-877.5	.0462	.472	.413	.455	.498	.455	.455	.413	.464	.472	.506	.540	.472	.506	.481
34.0	26.2	31.7	19.9	0.0	0.0000	.472	.395	.479	.479	.479	.479	.395	.462	.462	.505	.539	.471	.505	.479

Table 21A — Scaling Run 43, Test Configuration 2: Two 1.52-cm Nozzles
[(J) indicates thermocouples on an inlet jet centerline]

t (s)	Press Tank P (atm)	T_s (K)	Chamber P (atm)	Chamber Absolute Temperatures (K) at Locations I 1	2	3(J)	4	5	6	7	8	9	10	11	12	13
-5	***	***	1.031	292.2	292.2	292.2	292.2	292.2	292.2	290.4	289.6	289.3	290.2	290.3	290.2	290.1
-4	***	***	1.031	292.2	292.2	292.2	292.2	292.2	292.2	290.4	289.6	289.3	290.2	290.3	290.1	290.0
-3	***	***	1.031	292.2	292.2	292.2	292.2	292.2	292.2	290.5	289.6	289.3	290.2	290.3	290.1	289.9
-2	***	***	1.031	292.2	292.2	292.2	292.2	292.2	292.2	290.5	289.6	289.3	290.2	290.3	290.0	290.0
-1	***	***	1.031	292.2	292.2	292.2	292.2	292.2	292.2	290.4	289.5	289.3	290.2	290.4	290.1	290.2
0	6.291	292.2	1.031	292.2	292.2	291.2	292.2	292.2	292.2	290.5	289.6	289.3	290.2	290.4	290.2	290.2
1	6.286	292.2	1.031	292.2	292.2	292.2	292.2	292.2	292.2	290.5	289.7	289.3	290.1	290.3	290.2	290.2
2	6.067	294.2	1.100	294.7	295.2	293.7	293.7	293.7	294.2	293.1	292.9	292.0	293.2	293.2	292.8	292.5
3	5.837	273.2	1.188	299.2	297.2	294.2	297.2	298.2	297.2	296.5	296.0	294.8	296.4	296.5	295.5	295.4
4	5.657	272.2	1.265	301.2	299.7	296.2	300.2	300.2	299.7	298.5	297.7	296.7	298.1	297.9	297.5	297.4
5	5.388	271.2	1.363	303.2	300.2	297.2	302.2	302.2	302.2	300.4	299.7	298.5	300.2	300.2	299.9	299.5
6	5.176	270.7	1.431	303.7	301.7	298.2	302.7	302.7	302.7	301.3	300.5	299.5	301.2	300.9	300.8	300.3
7	4.995	269.2	1.497	304.2	302.2	298.2	303.2	303.2	303.2	302.1	301.1	300.3	301.8	301.5	301.4	301.0
8	4.850	269.2	1.562	304.2	301.2	298.2	304.2	304.2	303.2	302.4	301.3	300.8	302.1	302.0	301.8	301.3
9	4.682	268.7	1.620	304.2	302.2	298.7	304.2	304.2	304.2	302.7	301.5	301.0	302.3	302.0	302.2	301.9
10	4.511	268.2	1.677	304.2	302.2	299.2	304.2	304.2	304.2	302.8	301.7	301.2	302.4	302.3	302.0	301.9
11	4.351	267.2	1.735	304.2	302.2	298.7	304.2	304.2	304.2	302.8	301.8	301.1	302.4	302.4	302.3	302.0
12	4.182	267.2	1.788	304.2	301.2	298.2	304.2	304.2	304.2	302.8	301.8	301.2	302.2	302.5	302.3	302.2
13	4.060	267.2	1.840	304.2	301.2	298.2	304.2	304.2	304.2	302.7	301.7	301.3	302.3	302.4	302.1	302.0
14	3.960	267.2	1.890	304.2	301.2	298.2	303.2	304.2	304.2	302.6	301.5	301.2	302.3	302.2	302.0	301.9
15	3.817	267.2	1.939	304.2	301.2	298.2	303.2	304.2	304.2	302.5	301.8	301.0	301.6	302.3	302.0	301.9
16	3.678	266.2	1.986	303.2	301.2	298.2	303.2	303.7	303.7	302.4	301.4	301.0	302.0	302.2	301.8	301.9
17	3.614	266.2	2.024	303.2	301.2	298.2	303.2	303.2	303.2	302.2	301.0	300.8	301.7	301.8	301.7	301.5
18	3.622	260.2	2.026	302.7	302.2	299.7	302.7	302.7	303.2	301.5	300.6	300.2	301.2	301.2	301.2	301.0
19	***	***	2.024	302.2	301.2	300.2	302.2	302.2	302.2	301.3	300.4	300.0	300.8	300.9	300.7	300.9
20	***	***	2.020	302.2	301.2	300.2	302.2	302.2	302.2	300.8	299.8	299.5	300.3	300.5	300.3	300.3
21	***	***	2.018	302.2	301.2	300.2	302.2	302.2	302.2	300.5	299.5	299.1	300.0	300.2	300.0	300.0
22	***	***	2.017	302.2	301.2	300.2	301.2	301.2	302.2	300.4	299.4	298.9	299.6	300.0	299.7	299.7
23	***	***	2.016	301.2	301.2	300.2	301.2	301.2	301.2	300.1	299.0	298.7	299.5	299.7	299.5	299.5
24	***	***	2.014	301.2	301.2	300.2	301.2	301.2	301.2	299.9	298.9	298.3	299.0	299.5	299.3	299.4
25	***	***	2.014	301.2	300.7	300.2	301.2	301.2	301.2	299.6	298.7	298.2	298.8	299.3	299.0	299.1
26	***	***	2.012	301.2	300.2	300.2	301.2	301.2	301.2	299.5	298.6	298.0	298.5	299.2	298.8	298.9
31	***	***	2.009	300.2	300.2	299.2	300.2	300.2	300.2	298.7	297.8	296.9	297.3	298.0	297.7	297.5
36	***	***	2.005	299.2	299.2	299.2	299.2	299.2	299.2	297.9	297.2	296.4	296.7	297.5	296.9	297.0
41	***	***	2.002	298.2	298.2	298.2	298.2	298.2	298.2	296.9	296.4	295.4	295.9	296.8	296.3	296.2
46	***	***	1.999	298.2	298.2	298.2	298.2	298.2	298.2	296.4	295.5	294.7	295.2	296.0	295.6	295.6
51	***	***	1.996	297.2	298.2	297.2	298.2	297.2	297.2	296.2	295.4	294.5	295.0	295.7	295.4	295.5
56	***	***	1.994	297.2	297.2	297.2	297.2	297.2	297.2	295.9	295.2	294.3	295.1	295.7	295.2	295.2
61	***	***	1.992	297.2	297.2	297.2	297.2	296.7	297.2	295.7	295.0	294.2	295.0	295.4	295.1	295.1
66	***	***	1.990	296.7	297.2	297.2	296.2	296.2	296.7	295.2	294.5	293.8	294.5	295.1	295.0	294.9
71	***	***	1.989	296.2	297.2	296.2	296.2	296.2	296.2	295.0	294.2	293.6	294.4	294.9	294.6	294.5
76	***	***	1.987	296.2	297.2	296.2	296.2	296.2	296.2	294.9	294.0	293.4	294.3	294.7	294.5	294.3
86	***	***	1.984	296.2	296.2	296.2	296.2	295.2	296.2	294.5	293.8	293.1	293.9	294.4	294.2	294.2
96	***	***	1.982	295.2	296.2	296.2	296.2	295.2	295.2	294.2	293.4	292.9	293.8	294.2	293.9	293.8
106	***	***	1.979	295.2	296.2	296.2	295.2	295.2	295.2	293.9	293.2	292.6	293.5	293.8	293.6	293.5
116	***	***	1.977	295.2	295.2	295.2	295.2	295.2	295.2	293.8	293.0	292.4	293.3	293.7	293.4	293.3
126	***	***	1.976	295.2	295.2	295.2	295.2	295.2	295.2	293.5	292.8	292.4	293.1	293.4	293.2	293.1
136	***	***	1.974	295.2	295.2	295.2	295.2	294.2	295.2	293.4	292.6	292.2	293.0	293.3	292.9	293.1
146	***	***	1.972	294.2	295.2	295.2	295.2	294.2	294.2	293.2	292.4	292.2	293.0	293.1	292.8	292.9
156	***	***	1.970	294.2	295.2	295.2	295.2	294.2	294.2	293.1	292.4	291.9	292.9	293.1	293.0	292.8

COORDINATES

I	R (M)	THETA (DEG)	Z (M)
1	0.0	***	-0.152
2	0.0	***	-0.076
3	0.0	***	0.0
4	0.0	***	0.076
5	0.0	***	0.152
6	0.0	***	0.229
7	0.0	***	0.530
8	0.0	***	0.610
9	0.0	***	0.686
10	0.0	***	0.762
11	0.0	***	0.838
12	0.0	***	0.914
13	0.0	***	0.991

Table 21B — Inferred Pressurant Distribution, Scaling Run 43, Test Configuration 2: Two 1.52-cm Nozzles [(J) indicates thermocouples on an inlet jet centerline]

t (s)	$\bar{T}$ (°C)	$\bar{T}_n$ (°C)	$\bar{T}_p$ (°C)	β	β/θ	$\bar{X}$	Pressurant Fractions (X) at Locations I: 1	2	3(J)	4	5	6	7	8	9	10	11	12	13
COMMENCE VALVE OPENING																			
0.0	17.8	17.8	151.3	-.0	0.0000	0.000	0.000	0.000	0.000	0.000	0.000	0.000	0.000	0.000	0.000	0.000	0.000	0.000	
1.0	17.8	17.8	19.9	29540.7	-7.0229	-.000	-.041	-.041	.548	-.041	-.041	-.041	-.041	.018	-.041	-.100	-.100	-.041	-.041
VALVE FULLY OPEN																			
2.0	20.2	20.2	20.4	147.9	8.3811	.055	.157	4.783	.197	-8.977	-8.977	-4.390	1.114	7.535	2.031	4.783	2.948	1.114	-1.638
3.0	23.3	23.9	18.9	35.5	2.3644	.116	-.181	.219	.618	.219	.019	.219	.019	-.061	.119	-.021	-.001	.159	.179
4.0	25.3	27.0	16.8	18.2	1.0146	.164	.023	.171	.416	.121	.121	.171	.121	.112	.180	.131	.171	.190	.200
5.0	27.2	30.2	16.8	15.6	1.0624	.219	.104	.329	.479	.179	.179	.179	.187	.172	.232	.179	.194	.202	.232
6.0	28.0	31.7	17.3	15.4	.7096	.254	.169	.308	.481	.239	.239	.239	.218	.211	.259	.204	.239	.232	.266
7.0	28.6	32.9	17.8	15.1	.6515	.286	.209	.340	.538	.275	.275	.275	.235	.242	.275	.242	.268	.261	.281
8.0	28.9	33.8	18.2	15.6	.6495	.315	.257	.450	.578	.257	.257	.321	.263	.276	.289	.263	.283	.283	.315
9.0	29.2	34.6	18.7	14.4	.5073	.339	.303	.429	.586	.303	.303	.303	.291	.303	.322	.303	.328	.303	.322
10.0	29.3	35.1	19.1	15.4	.5273	.361	.331	.457	.582	.331	.331	.331	.313	.325	.338	.319	.338	.344	.350
11.0	29.3	35.4	19.4	15.7	.5351	.382	.352	.478	.635	.352	.352	.352	.333	.346	.365	.340	.352	.352	.359
12.0	29.2	35.5	19.7	16.3	.4944	.401	.365	.554	.681	.365	.365	.365	.346	.352	.371	.365	.358	.358	.365
13.0	29.2	35.7	20.0	16.1	.4630	.418	.379	.570	.697	.379	.379	.379	.366	.372	.385	.372	.379	.385	.391
14.0	29.0	35.7	20.3	16.9	.4608	.433	.385	580	.709	.450	.385	.385	.379	.392	.392	.379	.398	.398	.404
COMMENCE VALVE CLOSURE																			
15.0	29.0	35.8	20.6	16.4	.4222	.448	.396	.593	.724	.461	.396	.396	.396	.383	.415	.435	.402	.409	.415
16.0	28.8	35.7	20.8	-1832.0	.4354	.461	.463	.597	.731	.463	.429	.429	.402	.409	.416	.409	.409	.423	.416
VALVE FULLY CLOSED																			
17.0	28.6	35.9	20.8	-1559.1	.3705	.472	.458	.595	.732	.458	.458	.458	.410	.424	.424	.424	.431	.424	.437
18.0	28.9	35.9	21.0	286.4	-.0681	.472	.477	.510	.611	.477	.477	.443	.443	.443	.450	.443	.457	.443	.457
19.0	28.6	35.5	20.8	-286.4	.0681	.472	.486	.554	.554	.486	.486	.486	.431	.431	.431	.445	.452	.452	.438
20.0	28.0	34.6	20.6	-597.5	.1420	.472	.468	.539	.539	.468	.468	.468	.446	.454	.446	.461	.454	.461	.461
21.0	27.7	34.1	20.4	-312.0	.0741	.472	.454	.527	.527	.454	.454	.454	.454	.462	.469	.469	.469	.469	.469
22.0	27.5	33.9	20.4	-159.6	.0379	.472	.434	.507	.507	.507	.507	.434	.441	.448	.463	.478	.463	.471	.471
23.0	27.4	33.7	20.3	-162.1	.0385	.472	.487	.487	.487	.487	.487	.487	.442	.457	.457	.464	.464	.464	.464
24.0	27.1	33.3	20.1	-331.6	.0788	.472	.477	.477	.477	.477	.477	.477	.447	.454	.477	.485	.469	.477	.462
25.0	27.1	33.3	20.1	0.0	0.0000	.472	.465	.503	.465	.465	.465	.465	.457	.457	.472	.495	.472	.480	.472
26.0	26.8	32.8	20.0	-342.4	.0814	.472	.454	.532	.454	.454	.454	.454	.454	.454	.478	.509	.470	.486	.478
27.0	26.8	32.8	20.0	0.0	0.0000	.472	.436	.514	.436	.436	.514	.436	.443	.451	.475	.522	.483	.498	.490
28.0	26.6	32.6	19.9	-175.5	.0417	.472	.453	.493	.414	.493	.493	.493	.438	.438	.469	.509	.469	.493	.477
29.0	26.5	32.4	19.9	-178.5	.0424	.472	.475	.475	.475	.475	.475	.475	.443	.435	.467	.515	.459	.483	.483
30.0	26.3	32.2	19.8	-181.7	.0432	.472	.464	.464	.464	.464	.464	.464	.447	.439	.472	.526	.480	.496	.488
31.0	26.2	31.9	19.7	-184.7	.0439	.472	.456	.456	.456	.456	.456	.456	.440	.440	.489	.530	.489	.497	.513
32.0	26.0	31.7	19.7	-188.1	.0447	.472	.443	.443	.443	.443	.526	.443	.443	.435	.484	.534	.484	.501	.509
33.0	26.0	31.7	19.7	0.0	0.0000	.472	.434	.434	.434	.476	.517	.434	.451	.434	.484	.550	.484	.500	.500
34.0	25.9	31.5	19.6	-191.4	.0455	.472	.412	.496	.412	.496	.496	.496	.446	.429	.471	.538	.471	.488	.479

Table 22A — Scaling Run 44, Test Configuration 2: Two 1.52-cm Nozzles
[(J) indicates thermocouples on an inlet jet centerline]

t (s)	Press Tank P (atm)	T_2 (K)	Chamber P (atm)	Chamber Absolute Temperatures (K) at Locations I: 1	2	3(J)	4	5	6	7	8	9	10	11	12	13
-5	***	***	1.029	292.2	292.2	291.2	291.2	291.2	291.2	290.2	289.5	289.1	290.1	290.1	290.1	290.0
-4	***	***	1.029	292.2	292.2	291.2	291.2	291.2	291.2	290.2	289.5	289.1	290.1	290.1	290.1	289.9
-3	***	***	1.029	292.2	292.2	291.2	291.2	291.2	292.2	290.2	289.5	289.0	290.0	290.1	289.9	289.8
-2	***	***	1.029	292.2	292.2	291.2	291.2	291.2	292.2	290.2	289.5	289.0	290.1	290.1	290.0	289.9
-1	***	***	1.029	292.2	292.2	291.2	291.2	291.2	292.2	290.2	289.5	289.0	290.1	290.1	290.0	289.9
0	6.304	292.2	1.030	292.2	292.2	291.2	291.2	291.2	291.2	290.2	289.5	289.1	290.1	290.1	290.0	289.9
1	6.297	292.2	1.029	292.2	292.2	291.2	291.2	291.2	291.2	290.3	289.5	289.3	290.1	290.2	290.1	289.9
2	6.096	295.2	1.099	294.7	295.2	293.7	293.7	293.7	293.7	292.3	293.0	292.0	293.1	292.9	292.4	292.1
3	5.767	272.2	1.215	299.2	297.2	294.2	297.2	297.2	297.2	297.0	296.6	295.2	296.7	296.5	296.2	295.8
4	5.553	271.7	1.289	300.7	299.2	295.7	299.7	300.2	299.7	298.9	298.2	297.2	298.4	298.6	298.0	297.7
5	5.379	271.2	1.363	302.2	300.2	297.2	302.2	302.2	301.2	300.4	299.4	298.3	299.9	299.8	299.2	299.1
6	5.209	269.7	1.432	303.2	301.2	297.7	302.7	302.7	302.7	300.9	300.2	299.5	300.9	300.8	300.4	300.3
7	5.028	269.2	1.497	304.2	301.2	298.2	303.2	303.2	303.2	301.7	300.8	300.0	301.4	301.1	300.8	300.6
8	4.842	268.2	1.560	304.2	301.2	298.2	303.2	303.2	303.2	302.0	301.1	300.6	301.8	301.7	301.3	301.2
9	4.673	268.2	1.618	304.2	301.7	298.2	304.2	304.2	303.7	302.6	301.3	300.9	302.1	302.0	301.5	301.4
10	4.498	267.2	1.678	304.2	301.2	298.2	304.2	304.2	304.2	302.4	301.7	300.8	302.1	302.1	302.0	301.8
11	4.324	267.2	1.734	304.2	301.7	298.2	304.2	304.2	304.2	302.5	301.5	301.1	302.1	302.3	301.9	301.8
12	4.177	266.2	1.788	304.2	301.2	298.2	303.2	304.2	304.2	302.5	301.6	301.1	302.4	302.2	301.8	301.8
13	4.069	266.2	1.840	304.2	301.2	298.2	304.2	304.2	304.2	302.4	301.3	301.0	302.1	302.2	301.8	301.8
14	3.944	266.2	1.890	303.2	301.2	298.2	303.2	303.7	303.7	302.2	301.5	300.9	302.1	302.0	301.8	301.6
15	3.790	266.2	1.939	303.2	301.2	298.2	303.2	303.2	303.2	302.3	301.5	300.9	301.9	302.1	301.7	301.6
16	3.698	266.2	1.986	303.2	300.7	298.2	303.2	303.2	303.2	302.2	301.1	300.9	301.8	301.8	301.4	301.3
17	3.621	265.2	2.023	303.2	301.2	297.2	303.2	303.2	303.2	301.9	301.0	300.6	301.5	301.7	301.4	301.4
18	3.574	260.7	2.027	302.7	301.2	299.2	302.2	302.7	302.7	301.3	300.5	300.2	300.9	301.3	300.9	300.9
19	***	***	2.024	302.2	301.2	300.2	302.2	302.2	302.2	301.0	300.1	299.9	300.6	300.8	300.5	300.5
20	***	***	2.021	302.2	301.2	300.2	302.2	302.2	302.2	300.8	299.9	299.4	300.1	300.4	300.1	300.1
21	***	***	2.019	302.2	301.2	300.2	301.7	302.2	302.2	300.6	299.6	299.2	299.8	300.3	299.9	299.9
22	***	***	2.017	301.2	301.2	300.2	301.2	301.2	302.2	300.3	299.5	299.0	299.6	300.0	299.7	299.6
23	***	***	2.016	301.2	301.2	300.2	301.2	301.2	301.2	300.2	299.3	298.7	299.3	299.6	299.3	299.5
24	***	***	2.015	301.2	300.2	300.2	301.2	301.2	301.2	300.0	299.1	298.5	299.2	299.5	299.0	299.2
25	***	***	2.014	301.2	300.2	300.2	300.2	300.2	301.2	299.6	298.8	298.1	298.8	299.2	298.9	298.9
26	***	***	2.013	301.2	300.2	300.2	300.2	300.2	301.2	299.5	298.6	298.0	298.5	299.0	298.7	298.7
31	***	***	2.008	300.2	299.2	299.2	300.2	299.2	300.2	298.7	297.8	297.1	297.5	298.4	297.8	297.7
36	***	***	2.005	299.2	299.2	298.2	299.2	299.2	299.2	298.0	297.1	296.2	296.4	297.3	296.7	296.8
41	***	***	2.002	298.2	298.2	298.2	298.2	298.2	298.2	297.3	296.5	295.6	295.8	296.6	295.9	296.0
46	***	***	1.999	298.2	298.2	298.2	298.2	297.2	298.2	296.8	296.0	295.2	295.7	296.5	295.8	295.7
51	***	***	1.997	297.2	297.7	297.2	297.2	297.2	297.2	296.4	295.6	294.8	295.5	296.1	295.4	295.5
56	***	***	1.995	297.2	297.2	297.2	297.2	297.2	297.2	295.9	295.1	294.4	295.1	295.7	295.0	295.1
61	***	***	1.993	296.2	297.2	297.2	297.2	296.2	297.2	295.5	294.8	294.0	294.8	295.3	294.9	294.9
66	***	***	1.990	296.2	297.2	296.2	296.2	296.2	296.7	295.2	294.4	293.8	294.5	295.1	294.5	294.6
71	***	***	1.989	296.2	296.2	296.2	296.2	296.2	296.2	295.0	294.3	293.6	294.4	294.9	294.4	294.5
76	***	***	1.988	296.2	296.2	296.2	296.2	296.2	296.2	294.6	293.9	293.4	294.2	294.7	294.4	294.3
86	***	***	1.985	296.2	296.2	296.2	296.2	295.2	296.2	294.3	293.6	293.1	293.9	294.3	293.9	293.9
96	***	***	1.982	295.2	296.2	296.2	295.2	295.2	295.2	294.0	293.3	292.7	293.5	294.0	293.8	293.7
106	***	***	1.980	295.2	296.2	295.2	295.2	295.2	295.2	292.7	292.9	292.4	293.2	293.7	293.4	293.4
116	***	***	1.978	295.2	295.2	295.2	295.2	295.2	295.2	293.4	292.7	292.3	293.1	293.4	293.1	293.1
126	***	***	1.976	295.2	295.2	295.2	295.2	294.2	294.7	293.2	292.5	292.1	293.0	293.2	293.1	292.9
136	***	***	1.975	294.2	295.2	295.2	295.2	294.2	294.2	293.1	292.4	292.0	292.9	293.1	292.9	292.9
146	***	***	1.973	294.2	295.2	295.2	295.2	294.2	294.2	293.0	292.4	291.9	292.7	293.0	292.7	292.8
156	***	***	1.971	294.2	295.2	295.2	295.2	294.2	294.2	292.9	292.2	291.8	292.7	292.8	292.7	292.6

COORDINATES

I	R (M)	THETA (DEG)	Z (M)
1	0.0	***	-0.152
2	0.0	***	-0.076
3	0.0	***	0.0
4	0.0	***	0.076
5	0.0	***	0.152
6	0.0	***	0.229
7	0.0	***	0.530
8	0.0	***	0.610
9	0.0	***	0.686
10	0.0	***	0.762
11	0.0	***	0.838
12	0.0	***	0.914
13	0.0	***	0.991

Table 22B — Inferred Pressurant Distribution, Scaling Run 44, Test Configuration 2: Two 1.52-cm Nozzles [(J) indicates thermocouples on an inlet jet centerline]

t (s)	$\bar{T}$ (°C)	$\bar{T}_s$ (°C)	$\bar{T}_p$ (°C)	β	β/θ	$\bar{X}$	Pressurant Fractions (X) at Locations I 1	2	3(J)	4	5	6	7	8	9	10	11	12	13
COMMENCE VALVE OPENING																			
0.0	17.4	17.4	136.6	-.1	0.0000	0.000	0.000	0.000	0.000	0.000	0.000	0.000	0.000	0.000	0.000	0.000	0.000	0.000	
1.0	17.5	17.5	21.8	23806.6	-25.6446	-.001	-.008	-.008	-.008	-.008	-.008	-.008	.015	-.008	.030	-.008	.015	-.008	-.008
VALVE FULLY OPEN																			
2.0	20.1	20.1	20.5	136.7	7.7710	.054	-.272	.845	-.272	-.272	-.272	-.272	-1.167	1.963	.845	.845	.398	-.720	-.943
3.0	23.4	24.1	19.0	37.3	3.3167	.135	-.062	.331	.725	.135	.135	.135	-.022	-.081	.115	.017	.036	.115	.174
4.0	25.4	27.2	17.3	16.0	.8406	.179	.128	.280	.534	.128	.077	.128	.108	.108	.169	.148	.128	.189	.199
5.0	26.9	29.6	17.2	14.8	.7547	.220	.177	.338	.498	.097	.097	.177	.161	.185	.241	.193	.201	.249	.241
6.0	27.8	31.4	17.4	14.7	.6804	.255	.211	.354	.533	.175	.175	.175	.232	.232	.254	.225	.232	.261	.254
7.0	28.3	32.6	17.7	15.2	.6480	.286	.210	.413	.548	.210	.210	.210	.244	.258	.278	.258	.278	.305	.298
8.0	28.6	33.4	18.1	15.5	.6261	.314	.258	.454	.584	.258	.258	.258	.271	.284	.290	.277	.284	.310	.303
9.0	29.0	34.3	18.5	13.8	.4847	.338	.308	.466	.624	.245	.245	.276	.283	.327	.321	.308	.314	.340	.340
10.0	29.0	34.8	18.8	15.2	.5486	.362	.337	.525	.650	.275	.275	.275	.325	.325	.356	.337	.337	.343	.343
11.0	29.1	35.3	19.2	15.0	.4878	.382	.362	.517	.673	.300	.300	.300	.337	.356	.362	.362	.356	.374	.368
12.0	29.0	35.4	19.4	16.0	.4977	.401	.374	.562	.687	.374	.312	.312	.355	.368	.374	.355	.368	.393	.380
13.0	28.9	35.6	19.7	15.7	.4544	.418	.387	.576	.701	.387	.324	.324	.375	.400	.387	.387	.381	.406	.400
14.0	28.7	35.5	19.9	17.0	.4669	.434	.434	.582	.709	.390	.358	.358	.390	.390	.403	.390	.396	.409	.409
COMMENCE VALVE CLOSURE																			
15.0	28.7	35.6	20.1	16.5	.4271	.448	.463	.592	.722	.398	.398	.398	.398	.398	.411	.411	.398	.424	.417
16.0	28.5	35.5	20.3	-391.2	.4212	.462	.467	.631	.730	.401	.401	.401	.401	.427	.414	.421	.421	.447	.440
VALVE FULLY CLOSED																			
17.0	28.4	35.5	20.5	-301.4	.3245	.472	.470	.603	.803	.403	.403	.403	.423	.430	.436	.443	.430	.450	.436
18.0	29.0	36.3	20.8	122.9	-.1323	.472	.482	.578	.642	.449	.417	.417	.443	.449	.443	.462	.437	.462	.449
19.0	28.5	35.7	20.6	-91.6	.0986	.472	.500	.566	.566	.434	.434	.434	.441	.460	.447	.467	.454	.467	.460
20.0	28.1	35.0	20.3	-95.3	.1026	.472	.486	.554	.554	.418	.418	.418	.445	.459	.466	.486	.466	.486	.473
21.0	27.8	34.6	20.2	-65.8	.0708	.472	.476	.545	.545	.441	.406	.406	.448	.469	.469	.497	.462	.490	.476
22.0	27.5	34.2	20.1	-67.7	.0729	.472	.524	.524	.524	.453	.453	.382	.453	.453	.460	.489	.460	.481	.474
23.0	27.4	33.9	20.0	-34.6	.0373	.472	.510	.510	.510	.438	.438	.438	.438	.452	.467	.495	.474	.495	.467
24.0	27.2	33.7	19.9	-35.2	.0379	.472	.497	.570	.497	.425	.425	.425	.439	.454	.468	.490	.468	.497	.476
25.0	27.1	33.5	19.9	-35.7	.0384	.472	.473	.547	.473	.473	.473	.400	.444	.451	.473	.495	.466	.488	.473
26.0	26.9	33.3	19.8	-36.2	.0390	.472	.468	.542	.468	.468	.468	.394	.446	.461	.468	.498	.468	.498	.483
27.0	26.8	33.0	19.7	-36.8	.0396	.472	.518	.518	.518	.443	.443	.443	.436	.443	.466	.488	.466	.481	.466
28.0	26.6	32.8	19.7	-37.4	.0403	.472	.509	.509	.509	.433	.433	.433	.441	.456	.471	.501	.456	.501	.479
29.0	26.5	32.6	19.6	-38.0	.0409	.472	.504	.504	.504	.427	.427	.427	.457	.457	.481	.504	.457	.496	.488
30.0	26.3	32.4	19.5	-38.7	.0417	.472	.494	.494	.494	.417	.455	.417	.455	.455	.479	.518	.463	.502	.487
31.0	26.2	32.2	19.5	-39.3	.0423	.472	.478	.556	.478	.399	.478	.399	.438	.454	.478	.525	.454	.501	.493
32.0	26.2	32.2	19.5	0.0	0.0000	.472	.532	.532	.433	.453	.453	.414	.429	.445	.469	.508	.453	.500	.492
33.0	26.0	31.9	19.4	-40.0	.0431	.472	.519	.519	.440	.440	.440	.440	.432	.448	.464	.519	.464	.504	.504
34.0	25.9	31.7	19.3	-40.7	.0438	.472	.514	.514	.434	.434	.434	.434	.434	.442	.474	.539	.466	.514	.498
XXX																			

Table 23A — Scaling Run 45, Test Configuration 1: One 1.52-cm Nozzle
[(J) indicates thermocouple on an inlet jet centerline]

t (s)	Press Tank P (atm)	T_t (K)	Chamber P (atm)	Chamber Absolute Temperatures (K) at Locations I: 1	2	3(J)	4	5	6	7	8	9	10	11	12	13
-5	***	***	1.028	292.2	292.2	292.2	292.2	292.2	292.2	290.5	289.6	289.4	290.4	290.4	290.1	290.1
-4	***	***	1.028	292.2	292.2	292.2	292.2	292.2	292.2	290.5	289.7	289.4	290.4	290.4	290.2	290.1
-3	***	***	1.028	292.2	292.2	292.2	292.2	292.2	292.2	290.5	289.6	289.4	290.4	290.4	290.1	290.1
-2	***	***	1.028	292.2	292.2	292.2	292.2	292.2	292.2	290.5	289.7	289.4	290.3	290.4	290.2	290.2
-1	***	***	1.028	292.2	292.2	292.2	292.2	292.2	292.2	290.5	289.7	289.4	290.3	290.4	290.1	290.2
0	6.305	292.2	1.028	292.2	292.2	292.2	292.2	292.2	292.2	290.7	289.7	289.5	290.3	290.4	290.2	290.2
1	6.248	295.7	1.037	292.2	293.7	292.2	292.2	292.2	292.2	290.8	290.3	289.8	290.9	290.8	290.5	290.6
2	6.107	279.2	1.077	294.2	293.2	293.2	293.2	293.2	293.2	292.3	291.9	291.2	292.4	292.4	292.2	292.0
3	5.998	273.2	1.121	296.2	294.2	292.2	295.2	295.2	295.2	293.9	293.3	292.5	293.9	293.7	293.5	293.4
4	5.876	272.7	1.162	297.7	295.7	292.7	296.7	296.7	296.2	295.2	294.3	293.8	295.0	295.1	294.7	294.6
5	5.799	272.2	1.201	298.2	296.2	294.2	298.2	297.2	297.2	296.0	295.2	294.5	296.0	295.9	295.6	295.2
6	5.653	272.2	1.239	299.2	297.2	294.2	298.7	298.7	298.2	296.9	296.0	295.4	296.7	296.7	296.5	296.4
7	5.577	272.2	1.274	300.2	297.2	295.2	299.2	299.2	299.2	297.4	296.5	296.0	297.3	297.1	296.9	296.8
8	5.480	271.2	1.308	300.2	297.2	295.2	299.7	299.2	299.2	297.7	296.7	296.3	297.4	297.4	297.3	297.2
9	5.351	271.2	1.344	300.2	298.2	295.2	300.2	300.2	300.2	298.2	297.3	296.9	297.9	298.0	297.8	297.5
10	5.277	270.2	1.377	300.2	297.2	295.2	300.2	300.2	300.2	298.8	297.5	297.1	298.1	298.1	297.8	297.7
11	5.212	270.2	1.411	300.7	298.2	295.2	300.2	300.2	300.2	298.7	297.5	297.4	298.3	298.2	298.0	297.9
12	5.067	270.2	1.444	300.2	298.2	295.2	300.2	300.2	300.2	298.7	297.8	297.3	298.2	298.2	298.1	298.1
13	4.984	270.2	1.475	300.7	297.7	295.2	300.2	300.2	300.2	298.8	297.8	297.4	298.3	298.4	298.1	298.1
14	4.926	269.2	1.506	300.2	298.2	295.2	300.2	300.2	300.2	298.8	297.7	297.5	298.4	298.2	298.1	298.1
15	4.861	269.2	1.538	300.2	298.2	296.2	300.2	300.2	300.2	298.8	297.7	297.4	298.4	298.3	298.2	298.0
16	4.723	269.2	1.567	300.2	298.2	295.7	300.2	300.2	300.2	298.7	297.8	297.4	298.4	298.4	298.2	298.3
17	4.658	269.2	1.597	300.2	298.2	295.2	300.2	300.2	300.2	298.8	297.8	297.5	298.3	298.4	298.1	298.1
18	4.579	268.2	1.635	300.2	298.2	295.2	300.2	300.2	300.2	298.8	297.8	297.5	298.3	298.4	298.1	298.0
19	4.528	268.2	1.664	300.2	298.2	295.2	300.2	300.2	300.2	298.7	297.7	297.4	298.4	298.2	298.1	297.9
20	4.414	268.2	1.692	300.2	298.2	295.2	300.2	300.2	300.2	298.7	297.7	297.4	298.2	298.2	298.1	298.0
21	4.351	268.2	1.719	300.2	297.2	295.2	300.2	300.2	300.2	298.6	297.7	297.3	298.3	298.2	298.1	297.9
22	4.262	267.2	1.746	300.2	298.2	295.2	300.2	300.2	300.2	298.7	297.7	297.4	298.2	298.3	298.1	298.0
23	4.237	268.2	1.772	300.2	297.7	295.2	299.7	300.2	300.2	298.5	297.7	297.2	298.2	298.2	298.1	298.0
24	4.128	267.2	1.799	300.2	297.2	295.2	300.2	300.2	300.2	298.5	297.6	297.4	298.1	298.2	298.0	297.9
25	4.077	268.2	1.826	300.2	297.2	295.2	300.2	300.2	300.2	298.4	297.5	297.3	298.1	298.1	298.0	297.9
26	4.016	268.2	1.851	300.2	297.2	295.2	300.2	300.2	300.2	298.4	297.4	297.3	298.0	298.1	298.0	297.8
27	3.931	268.2	1.876	300.2	297.2	295.2	299.2	300.2	300.2	298.3	297.4	297.1	298.1	298.0	297.8	297.7
28	3.888	268.2	1.900	300.2	298.2	295.2	299.2	300.2	300.2	298.4	297.4	297.1	298.0	298.0	297.8	297.8
29	3.827	268.2	1.924	300.2	297.2	295.2	299.2	300.2	300.2	298.2	297.4	297.0	298.0	297.9	297.7	297.7
30	3.767	268.2	1.948	300.2	297.2	295.2	299.7	300.2	300.2	298.3	297.4	297.1	297.9	297.9	297.7	297.6
31	3.727	268.2	1.972	300.2	297.2	295.2	299.2	300.2	300.2	298.2	297.4	296.9	297.8	297.8	297.8	297.7
32	3.676	262.7	1.991	299.7	297.2	294.7	299.2	299.7	299.7	298.1	297.3	296.9	297.8	297.8	297.7	297.6
33	3.651	256.2	1.994	299.2	298.2	296.2	299.2	299.2	299.2	298.0	297.1	296.7	297.9	297.7	297.5	297.5
34	***	***	1.991	299.2	298.2	297.2	299.2	299.2	299.2	297.8	296.9	296.5	297.4	297.4	297.3	297.3
35	***	***	1.990	299.2	298.2	297.2	298.2	299.2	299.2	297.6	296.8	296.4	297.3	297.3	297.2	296.9
36	***	***	1.989	299.2	298.2	297.2	298.2	299.2	299.2	297.5	296.7	296.3	297.9	297.3	296.9	296.8
37	***	***	1.988	298.2	298.2	297.2	298.2	298.2	298.7	297.4	296.6	296.2	296.8	297.3	296.9	296.8
38	***	***	1.987	298.2	298.2	297.2	298.2	298.2	298.2	297.3	296.4	296.0	296.8	297.0	296.8	296.7
39	***	***	1.986	298.2	298.2	297.2	298.2	298.2	298.2	297.0	296.3	295.8	296.7	296.8	296.7	296.6
40	***	***	1.985	298.2	298.2	297.2	298.2	298.2	298.2	296.9	296.0	295.7	296.3	296.7	296.5	296.4
41	***	***	1.985	298.2	298.2	297.2	298.2	298.2	298.2	296.8	296.0	295.5	296.3	296.7	296.5	296.3
46	***	***	1.982	297.2	297.2	297.2	297.2	297.2	297.2	296.2	295.4	295.0	295.7	296.3	295.9	295.9
51	***	***	1.979	297.2	297.2	297.2	297.2	297.2	297.2	295.8	295.0	294.5	295.2	295.8	295.4	295.5
56	***	***	1.977	297.2	297.2	297.2	297.2	296.7	297.2	295.2	294.6	294.1	295.0	295.5	295.2	295.1

I	R (M)	THETA (DEG)	Z (M)
1	0.0	***	-0.152
2	0.0	***	-0.076
3	0.0	***	0.0
4	0.0	***	0.076
5	0.0	***	0.152
6	0.0	***	0.229
7	0.0	***	0.530
8	0.0	***	0.610
9	0.0	***	0.686
10	0.0	***	0.762
11	0.0	***	0.838
12	0.0	***	0.914
13	0.0	***	0.991

Table 23B — Inferred Pressurant Distribution, Scaling Run 45, Test Configuration 1: One 1.52-cm Nozzle [(J) indicates thermocouple on an inlet jet centerline]

t (s)	$\bar{T}$ (°C)	$\bar{T}_e$ (°C)	$\bar{T}_p$ (°C)	β	β/θ	$\bar{X}$	Pressurant Fractions (X) at Locations I: 1	2	3(J)	4	5	6	7	8	9	10	11	12	13
COMMENCE VALVE OPENING																			
0.0	17.9	17.9	255.1	1.9	0.0000	0.000	0.000	0.000	0.000	0.000	0.000	0.000	0.000	0.000	0.000	0.000	0.000	0.000	
1.0	18.2	18.2	20.8	1157.8	8.7765	.008	-.122	.465	-.122	-.122	-.122	-.122	-.083	.113	-.005	.152	.035	-.005	.035
VALVE FULLY OPEN																			
2.0	19.5	19.5	17.9	192.0	6.4480	.040	-.213	.386	.386	.386	.386	.386	.027	-.333	-.033	-.333	-.213	-.213	-.093
3.0	20.8	21.3	14.5	60.8	2.1507	.074	-.081	.211	.503	.065	.065	.065	.036	-.008	.065	-.037	.021	.021	.036
4.0	22.1	23.0	13.5	34.0	1.0795	.103	-.037	.174	.490	.069	.069	.121	.069	.058	.090	.037	.048	.069	.079
5.0	22.9	24.3	13.7	31.0	.9325	.129	.039	.227	.415	.039	.133	.133	.105	.086	.133	.058	.086	.095	.133
6.0	23.8	25.5	14.1	24.8	.7025	.154	.057	.231	.493	.101	.101	.144	.135	.118	.153	.101	.118	.118	.127
7.0	24.4	26.4	14.6	24.9	.6451	.175	.046	.299	.468	.130	.130	.130	.156	.139	.173	.122	.156	.156	.173
8.0	24.5	26.8	15.1	28.7	.7361	.196	.082	.338	.509	.124	.167	.167	.167	.167	.184	.150	.167	.159	.167
9.0	25.1	27.7	15.6	21.5	.5446	.216	.131	.317	.565	.151	.151	.151	.193	.184	.201	.176	.184	.184	.201
10.0	25.1	27.9	16.1	27.4	.6630	.235	.171	.424	.593	.171	.171	.171	.163	.188	.205	.180	.197	.205	.213
11.0	25.3	28.3	16.5	24.4	.5801	.253	.163	.374	.628	.205	.205	.205	.205	.214	.214	.205	.222	.214	.231
12.0	25.3	28.4	16.9	27.1	.6269	.270	.220	.393	.652	.220	.220	.220	.220	.211	.237	.220	.237	.229	.229
13.0	25.3	28.6	17.2	26.6	.5634	.285	.191	.456	.677	.236	.236	.236	.236	.236	.244	.236	.236	.244	.244
14.0	25.3	28.7	17.6	26.3	.5455	.300	.251	.431	.700	.251	.251	.251	.242	.251	.251	.233	.269	.260	.260
15.0	25.4	28.9	17.9	24.9	.5169	.314	.272	.453	.635	.272	.272	.272	.272	.272	.281	.254	.281	.272	.281
16.0	25.4	28.9	18.1	26.1	.4868	.327	.283	.468	.698	.283	.283	.283	.283	.274	.292	.265	.283	.283	.274
17.0	25.4	28.9	18.4	27.1	.5178	.340	.290	.479	.762	.290	.290	.290	.280	.280	.290	.280	.290	.299	.299
18.0	25.3	29.0	18.7	26.1	.6145	.355	.303	.496	.785	.303	.303	.303	.303	.303	.294	.294	.303	.313	.313
19.0	25.3	29.0	18.8	26.6	.4707	.366	.310	.506	.800	.310	.310	.310	.310	.310	.320	.290	.330	.320	.339
20.0	25.3	29.1	19.0	25.9	.4326	.377	.320	.518	.816	.320	.320	.320	.320	.320	.330	.320	.340	.330	.330
21.0	25.2	29.0	19.2	28.2	.4561	.387	.318	.623	.826	.318	.318	.318	.328	.318	.338	.308	.338	.328	.349
22.0	25.3	29.2	19.4	23.7	.3607	.396	.338	.541	.846	.338	.338	.338	.338	.338	.348	.338	.348	.348	.358
23.0	25.2	29.1	19.5	28.5	.4321	.405	.333	.593	.853	.385	.333	.333	.354	.333	.365	.333	.354	.344	.354
24.0	25.2	29.1	19.6	26.3	.3987	.414	.341	.656	.867	.341	.341	.341	.351	.351	.351	.351	.362	.362	.372
25.0	25.1	29.1	19.8	27.1	.4074	.423	.344	.665	.879	.344	.344	.344	.376	.365	.365	.355	.376	.365	.376
26.0	25.1	29.1	19.9	27.2	.3718	.431	.348	.674	.892	.348	.348	.348	.381	.381	.370	.359	.381	.370	.402
27.0	25.0	28.9	20.0	30.0	.4148	.439	.340	.675	.899	.452	.340	.340	.384	.373	.384	.351	.384	.384	.396
28.0	25.1	29.1	20.2	23.9	.2950	.446	.358	.583	.919	.471	.358	.358	.392	.392	.403	.370	.392	.392	.403
29.0	25.0	28.9	20.2	30.9	.4024	.453	.346	.692	.923	.462	.346	.346	.404	.381	.404	.369	.404	.404	.404
COMMENCE VALVE CLOSURE																			
30.0	25.0	28.9	20.4	26.1	.3205	.459	.356	.706	.938	.415	.356	.356	.403	.391	.403	.391	.415	.415	.426
31.0	24.9	28.9	20.4	47.5	.3614	.466	.354	.710	.947	.472	.354	.354	.413	.389	.425	.401	.425	.401	.413
VALVE FULLY CLOSED																			
32.0	24.7	28.6	20.4	45.1	.3434	.472	.393	.696	.999	.454	.393	.393	.405	.393	.405	.393	.405	.393	.405
33.0	25.2	29.3	20.6	-20.8	-.1586	.472	.455	.570	.802	.455	.455	.455	.420	.408	.431	.420	.420	.420	.420
34.0	24.7	28.6	20.4	20.8	.1586	.472	.450	.571	.693	.450	.450	.450	.438	.426	.438	.426	.450	.438	.450

Table 24A — Scaling Run 46, Test Configuration 1: One 1.52-cm Nozzle
[(J) indicates thermocouple on an inlet jet centerline]

t (s)	Press Tank P (atm)	T_t (K)	Chamber P (atm)	Chamber Absolute Temperatures (K) at Locations I: 1	2	3(J)	4	5	6	7	8	9	10	11	12	13
-5	***	***	1.029	292.2	292.2	291.2	292.2	291.7	292.2	290.5	289.2	288.8	289.7	289.9	289.9	289.9
-4	***	***	1.029	292.2	292.2	291.2	292.2	291.2	292.2	290.6	289.2	288.8	289.7	289.9	289.9	289.8
-3	***	***	1.029	292.2	292.2	291.2	292.2	291.7	292.2	290.6	289.2	288.8	289.7	289.9	289.9	289.7
-2	***	***	1.029	292.2	292.2	291.2	292.2	292.2	292.2	290.5	289.2	288.8	289.7	289.9	289.9	289.7
-1	***	***	1.029	292.2	292.2	291.2	292.2	292.2	292.2	290.5	289.2	288.8	289.7	289.9	289.9	289.7
0	6.341	291.2	1.029	292.2	292.2	291.2	292.2	292.2	292.2	290.5	289.2	288.8	289.7	289.9	289.9	289.8
1	6.323	291.2	1.029	292.2	292.2	291.2	292.2	292.2	292.2	290.5	289.2	288.8	289.6	289.9	289.8	289.9
2	6.191	290.7	1.056	293.2	293.2	293.2	292.7	292.7	292.7	291.5	290.5	290.0	291.0	291.2	290.9	290.9
3	6.057	273.2	1.102	295.2	293.2	292.2	294.2	294.2	294.2	293.2	292.1	291.4	292.7	292.9	292.6	292.4
4	5.939	272.7	1.144	297.2	294.7	292.7	295.7	295.7	295.7	294.5	293.4	292.9	293.9	294.0	293.9	294.0
5	5.878	272.2	1.184	298.2	296.2	293.2	297.2	297.2	297.2	295.6	294.3	293.5	295.1	295.1	295.0	294.9
6	5.721	271.7	1.223	299.2	296.7	294.2	298.2	298.2	297.7	296.5	295.1	294.5	295.7	295.9	295.6	295.9
7	5.656	271.2	1.259	299.2	297.2	294.2	299.2	299.2	298.2	297.2	295.9	295.0	296.4	296.5	296.4	296.2
8	5.502	271.2	1.295	300.2	297.2	295.2	299.2	299.2	299.2	297.7	296.4	295.5	296.8	297.0	297.0	296.9
9	5.406	270.7	1.341	300.2	297.2	295.2	299.2	299.2	299.2	298.1	296.8	296.2	297.3	297.5	297.3	297.4
10	5.330	270.2	1.374	300.2	297.2	295.2	300.2	300.2	299.2	298.3	297.0	296.4	297.5	297.5	297.5	297.3
11	5.180	270.2	1.408	300.2	297.7	295.2	300.2	300.2	300.2	298.5	297.2	296.6	297.3	297.7	297.7	297.7
12	5.095	270.2	1.440	300.2	298.2	295.2	300.2	300.2	300.2	298.7	297.3	296.8	297.7	298.1	297.8	297.8
13	5.053	269.2	1.473	300.2	298.2	295.2	300.2	300.2	300.2	298.7	297.3	296.9	297.8	298.0	297.9	297.8
14	4.931	269.2	1.504	300.2	297.2	295.7	300.2	300.2	300.2	298.7	297.4	296.6	297.8	298.0	298.0	297.8
15	4.829	269.2	1.535	300.2	297.2	295.2	300.2	300.2	300.2	298.9	297.4	297.0	298.0	298.0	298.0	298.0
16	4.766	268.2	1.565	300.2	297.2	295.2	300.2	300.2	300.2	298.9	297.4	297.0	297.8	298.0	297.9	297.9
17	4.715	268.2	1.594	300.2	297.2	295.2	300.2	300.2	300.2	298.8	297.3	296.9	298.0	298.0	298.0	297.9
18	4.607	268.2	1.624	300.2	297.7	295.2	300.2	300.2	300.2	298.7	297.4	296.9	297.9	298.1	298.0	297.8
19	4.510	268.2	1.653	300.2	297.2	295.2	300.2	300.2	300.2	298.7	297.4	296.9	297.8	298.0	298.0	297.9
20	4.446	267.2	1.680	300.2	296.2	295.2	300.2	300.2	300.2	298.7	297.1	296.9	297.6	298.1	297.9	297.7
21	4.380	267.2	1.708	300.2	297.7	295.2	300.2	300.2	300.2	298.6	297.5	296.8	297.5	297.8	297.9	297.8
22	4.335	267.2	1.735	300.2	297.2	295.2	300.2	300.2	300.2	298.6	297.3	296.7	297.6	297.8	298.0	297.7
23	4.242	267.2	1.764	300.2	297.2	295.2	300.2	300.2	300.2	298.5	297.1	296.8	297.7	297.6	297.8	297.7
24	4.146	267.2	1.790	300.2	297.2	295.2	299.2	300.2	300.2	298.8	297.2	296.7	297.5	297.7	297.7	297.7
25	4.113	267.2	1.815	300.2	297.2	295.2	299.2	300.2	300.2	298.6	297.0	296.7	297.5	297.7	297.6	297.5
26	4.023	267.2	1.841	300.2	297.2	295.2	299.2	300.2	300.2	298.4	297.0	296.7	297.6	297.7	297.7	297.5
27	3.984	267.2	1.867	300.2	297.2	295.2	299.2	300.2	300.2	298.4	297.0	296.7	297.5	297.6	297.7	297.5
28	3.902	267.2	1.899	299.7	297.2	295.2	299.2	300.2	300.2	298.3	296.8	296.5	297.5	297.5	297.5	297.4
29	3.849	267.2	1.923	299.2	297.2	295.2	299.2	300.2	300.2	298.2	296.8	296.4	297.4	297.4	297.4	297.4
30	3.772	267.2	1.947	299.2	297.2	295.2	299.2	299.2	299.7	298.3	296.8	296.4	297.3	297.4	297.5	297.3
31	3.739	267.2	1.971	299.2	297.2	295.2	299.2	300.2	299.2	298.2	296.8	296.4	297.3	297.4	297.4	297.6
32	3.707	267.2	1.988	299.2	297.2	295.2	299.2	299.2	299.2	298.3	296.7	296.3	297.1	297.3	297.4	297.2
33	3.681	255.2	1.987	299.2	297.7	295.2	299.2	299.2	299.2	298.0	296.4	296.2	296.9	297.1	297.1	296.9
34	***	***	1.985	299.2	298.2	296.2	299.2	299.2	299.2	297.8	296.4	295.9	296.7	297.0	297.0	297.0
35	***	***	1.984	299.2	298.2	296.7	298.7	299.2	299.2	297.7	296.3	295.8	296.6	297.1	296.8	296.8
36	***	***	1.982	298.2	298.2	297.2	298.2	298.2	299.2	297.5	296.1	295.7	296.5	296.8	296.7	296.7
37	***	***	1.981	298.2	298.2	297.2	298.2	298.2	298.2	297.4	296.0	295.4	296.3	296.7	296.6	296.5
38	***	***	1.980	298.2	298.2	297.2	298.2	298.2	298.2	297.3	295.8	295.3	296.0	296.6	296.5	296.5
39	***	***	1.980	298.2	297.2	297.2	298.2	298.2	298.2	297.1	295.7	295.2	295.8	296.5	296.3	296.3
40	***	***	1.978	298.2	297.2	297.2	298.2	298.2	298.2	297.0	295.5	295.0	295.7	296.4	296.2	296.1
41	***	***	1.978	298.2	297.2	297.2	298.2	298.2	298.2	296.8	295.4	294.9	295.5	296.2	296.0	295.9
46	***	***	1.975	297.2	297.2	297.2	297.2	297.2	297.2	296.4	295.0	294.3	294.8	295.5	295.2	295.3
51	***	***	1.973	297.2	297.2	296.2	297.2	297.2	297.2	296.0	294.5	294.0	294.5	295.2	294.7	295.0
56	***	***	1.971	296.2	297.2	296.2	297.2	296.2	296.7	295.5	294.2	293.6	294.3	294.9	294.5	294.6

COORDINATES

I	R (M)	THETA (DEG)	Z (M)
1	0.0	***	-0.152
2	0.0	***	-0.076
3	0.0	***	0.0
4	0.0	***	0.076
5	0.0	***	0.152
6	0.0	***	0.229
7	0.0	***	0.530
8	0.0	***	0.610
9	0.0	***	0.686
10	0.0	***	0.762
11	0.0	***	0.838
12	0.0	***	0.914
13	0.0	***	0.991

Table 24B — Inferred Pressurant Distribution, Scaling Run 46, Test Configuration 1: One 1.52-cm Nozzle [(J) indicates thermocouple on an inlet jet centerline]

t (s)	$\bar{T}$ (°C)	$\bar{T}_c$ (°C)	$\bar{T}_p$ (°C)	β	β/θ	$\bar{X}$	Pressurant Fractions (X) at Locations I: 1	2	3(J)	4	5	6	7	8	9	10	11	12	13
COMMENCE VALVE OPENING																			
0.0	17.6	17.6	324.3	.0	0.0000	0.000	0.000	0.000	0.000	0.000	0.000	0.000	0.000	0.000	0.000	0.000	0.000	0.000	
1.0	17.6	17.6	18.0	169.0	.0045	-.018	-.000	-.000	-.000	-.000	-.000	-.000	-.232	-.000	-.000	-.232	-.000	-.232	.464
VALVE FULLY OPEN																			
2.0	18.6	18.6	18.3	317.4	7.0471	.022	.239	.239	-2.892	1.804	1.804	1.804	.239	-1.014	-.387	-.700	-.700	.239	-.387
3.0	19.9	20.2	15.9	100.8	3.8593	.059	-.095	.375	.375	.140	.140	.140	-.001	-.072	-.001	-.095	-.095	-.025	-.025
4.0	21.3	22.1	13.5	38.1	1.2461	.089	-.060	.232	.349	.115	.115	.115	.057	.033	.045	.033	.045	.057	.022
5.0	22.4	23.6	13.2	29.5	.9049	.116	.003	.196	.388	.099	.099	.099	.099	.090	.128	.061	.080	.090	.080
6.0	23.2	24.8	13.5	27.2	.8057	.142	.023	.244	.376	.111	.111	.155	.120	.120	.138	.111	.111	.138	.093
7.0	23.8	25.7	13.9	26.3	.7116	.165	.099	.268	.438	.099	.099	.183	.133	.124	.167	.124	.133	.141	.141
8.0	24.3	26.6	14.5	24.3	.6434	.187	.082	.330	.412	.165	.165	.165	.157	.148	.190	.157	.157	.157	.148
9.0	24.5	27.1	15.2	27.3	.9299	.214	.128	.379	.463	.212	.212	.212	.170	.170	.178	.170	.161	.178	.153
10.0	24.8	27.5	15.6	24.9	.5856	.233	.166	.418	.502	.166	.166	.250	.191	.183	.200	.183	.200	.200	.200
11.0	25.0	28.0	16.1	24.0	.5691	.250	.203	.413	.539	.203	.203	.203	.212	.203	.220	.212	.220	.220	.203
12.0	25.1	28.3	16.5	24.7	.5437	.267	.230	.400	.570	.230	.230	.230	.222	.222	.230	.230	.213	.239	.222
13.0	25.1	28.4	16.9	26.0	.5894	.283	.247	.420	.593	.247	.247	.247	.238	.247	.238	.238	.229	.247	.247
14.0	25.1	28.5	17.2	26.6	.5572	.298	.257	.522	.567	.257	.257	.257	.248	.240	.275	.248	.248	.248	.248
15.0	25.1	28.6	17.5	25.4	.5141	.312	.274	.543	.633	.274	.274	.274	.247	.256	.256	.247	.265	.265	.247
16.0	25.1	28.7	17.7	26.3	.5110	.325	.284	.558	.649	.284	.284	.284	.257	.266	.266	.275	.275	.284	.266
17.0	25.1	28.8	18.0	25.4	.4659	.338	.296	.574	.666	.296	.296	.296	.287	.287	.287	.259	.278	.287	.278
18.0	25.1	28.9	18.2	25.1	.4657	.350	.310	.544	.685	.310	.310	.310	.301	.292	.301	.292	.292	.301	.301
19.0	25.1	28.9	18.4	26.4	.4712	.361	.317	.603	.698	.317	.317	.317	.307	.298	.307	.307	.307	.307	.298
20.0	25.1	29.0	18.6	24.9	.4010	.372	.329	.521	.714	.329	.329	.329	.319	.338	.319	.338	.309	.329	.329
21.0	25.1	29.0	18.7	26.1	.4350	.382	.334	.578	.724	.334	.334	.334	.334	.365	.334	.344	.344	.334	.334
22.0	25.0	29.0	18.9	26.5	.4200	.392	.338	.635	.734	.338	.338	.338	.338	.328	.348	.348	.348	.328	.338
23.0	25.0	29.0	19.0	26.5	.4426	.402	.342	.644	.745	.342	.342	.342	.342	.352	.352	.342	.372	.362	.342
24.0	24.9	28.9	19.2	27.1	.4027	.411	.344	.651	.754	.446	.344	.344	.323	.344	.354	.364	.364	.364	.344
25.0	24.9	28.9	19.3	26.9	.3760	.419	.347	.659	.763	.451	.347	.347	.347	.357	.357	.357	.368	.378	.368
26.0	24.9	28.9	19.4	26.4	.3769	.427	.352	.669	.775	.458	.352	.352	.373	.373	.363	.363	.373	.373	.373
27.0	24.8	28.9	19.6	26.5	.3725	.435	.358	.679	.786	.465	.358	.358	.379	.379	.368	.379	.390	.379	.379
28.0	24.7	28.8	19.7	28.6	.4980	.445	.408	.683	.793	.463	.352	.352	.397	.397	.386	.375	.397	.397	.386
29.0	24.7	28.7	19.8	28.6	.3661	.452	.462	.687	.799	.462	.350	.350	.395	.395	.395	.384	.406	.406	.384
COMMENCE VALVE CLOSURE																			
30.0	24.5	28.5	19.8	30.5	.3914	.459	.435	.686	.801	.455	.455	.398	.375	.386	.386	.398	.398	.386	.386
31.0	24.6	28.6	20.0	11729.4	.3059	.465	.468	.700	.816	.468	.352	.468	.398	.398	.398	.398	.410	.410	.364
VALVE FULLY CLOSED																			
32.0	24.4	28.4	20.0	11566.7	.3056	.470	.455	.692	.811	.455	.455	.455	.383	.395	.395	.407	.419	.395	.395
33.0	24.3	28.2	19.9	2084.9	.0551	.470	.445	.626	.808	.445	.445	.445	.397	.421	.397	.421	.421	.421	.421
34.0	24.0	27.8	19.7	4312.4	.1139	.470	.451	.576	.701	.451	.451	.451	.438	.426	.438	.451	.438	.426	.413

Table 25A — Scaling Run 47, Test Configuration 1: One 1.52-cm Nozzle
[(J) indicates thermocouple on an inlet jet centerline]

t (s)	Press Tank P (atm)	T_t (K)	Chamber P (atm)	Chamber Absolute Temperatures (K) at Locations I: 1	2	3(J)	4	5	6	7	8	9	10	11	12	13
-5	***	***	1.029	292.2	292.2	291.2	291.2	291.2	291.2	289.9	289.3	288.8	289.6	289.8	289.7	289.7
-4	***	***	1.029	292.2	291.7	291.2	291.7	291.2	291.2	289.9	289.3	288.8	289.6	289.7	289.7	289.6
-3	***	***	1.029	292.2	292.2	291.2	291.2	291.2	291.2	289.9	289.3	288.8	289.6	289.7	289.7	289.6
-2	***	***	1.029	292.2	292.2	291.2	291.2	291.2	291.7	289.9	289.3	288.8	289.6	289.7	289.7	289.6
-1	***	***	1.029	292.2	292.2	291.2	291.2	291.2	292.2	289.9	289.4	288.8	289.6	289.7	289.7	289.6
0	6.293	291.2	1.029	292.2	292.2	291.2	291.7	291.2	291.7	290.0	289.3	288.8	289.6	289.7	289.7	289.6
1	6.232	308.2	1.049	293.2	292.2	296.2	292.2	292.2	293.2	290.9	290.4	289.7	290.5	290.6	290.4	290.3
2	6.063	273.2	1.109	295.2	293.2	291.2	294.2	294.2	294.2	293.0	292.5	291.9	292.9	292.8	292.6	292.3
3	5.943	272.7	1.149	296.7	295.2	292.2	295.7	295.7	295.7	294.2	293.5	293.0	294.1	293.9	293.8	293.6
4	5.810	272.2	1.191	298.2	296.2	293.2	297.2	297.2	297.2	298.4	294.7	293.9	295.0	295.0	294.8	294.7
5	5.710	271.7	1.229	299.2	296.7	293.7	298.2	298.2	297.7	296.2	295.2	294.6	295.9	295.8	295.5	295.4
6	5.614	271.2	1.265	299.2	296.2	294.2	299.2	298.2	298.2	296.7	295.9	295.1	296.2	296.2	296.2	295.9
7	5.486	271.2	1.299	300.2	297.2	294.2	299.2	299.2	299.2	297.1	296.4	295.8	296.8	296.7	296.7	296.6
8	5.414	271.2	1.336	300.2	297.2	295.2	299.2	299.7	299.2	297.4	296.7	296.0	297.0	297.0	297.0	296.8
9	5.289	270.2	1.370	300.2	297.2	295.2	300.2	300.2	300.2	297.7	296.9	296.4	297.3	297.5	297.3	297.1
10	5.205	270.2	1.402	300.2	297.7	295.2	300.2	300.2	300.2	297.9	297.0	296.7	297.6	297.5	297.4	297.3
11	5.153	270.2	1.436	300.2	297.2	295.2	300.2	300.2	300.2	298.1	297.2	296.7	297.5	297.6	297.4	297.3
12	5.008	269.2	1.466	300.2	297.2	295.2	300.2	300.2	300.2	298.3	297.4	296.8	297.5	298.0	297.5	297.5
13	4.926	269.2	1.498	300.2	297.2	295.2	300.2	300.2	300.2	298.1	297.3	297.0	297.6	297.7	297.5	297.5
14	4.878	269.2	1.530	300.2	298.2	295.2	300.2	300.2	300.2	298.2	297.4	296.9	297.8	297.7	297.6	297.6
15	4.750	268.7	1.560	300.2	297.2	295.2	300.2	300.2	300.2	298.1	297.2	296.8	297.8	297.7	297.7	297.5
16	4.680	268.2	1.588	300.2	297.2	295.2	300.2	300.2	300.2	298.2	297.4	297.0	297.7	297.9	297.7	297.6
17	4.622	268.2	1.619	300.2	297.7	295.2	300.2	300.2	300.2	298.1	297.3	297.1	297.7	297.7	297.8	297.4
18	4.543	268.2	1.647	300.2	298.2	295.2	300.2	300.2	300.2	298.0	297.3	297.0	297.5	297.8	297.5	297.5
19	4.441	267.2	1.685	300.2	297.7	295.2	299.7	300.2	300.2	298.0	297.2	296.6	297.5	297.5	297.5	297.4
20	4.346	267.2	1.711	300.2	297.2	295.2	300.2	300.2	300.2	298.0	297.1	296.7	297.5	297.5	297.4	297.1
21	4.297	267.2	1.740	300.2	297.2	295.2	299.2	300.2	300.2	298.0	297.0	296.8	297.5	297.7	297.4	297.4
22	4.233	267.2	1.762	300.2	297.2	295.2	299.2	300.2	300.2	298.0	297.1	296.6	297.4	297.5	297.4	297.3
23	4.144	267.2	1.793	300.2	298.2	295.2	299.2	300.2	300.2	298.0	297.2	296.7	297.4	297.5	297.3	297.2
24	4.105	267.2	1.820	300.2	297.2	295.2	299.2	300.2	300.2	297.8	297.1	296.8	297.3	297.4	297.4	297.3
25	4.027	267.2	1.845	300.2	297.2	295.2	299.2	300.2	300.2	297.9	297.0	296.7	297.4	297.5	297.4	297.3
26	3.958	267.2	1.870	300.2	297.2	295.2	299.2	299.7	299.7	298.1	296.9	296.6	297.3	297.3	297.2	297.0
27	3.899	267.2	1.894	300.2	297.2	295.2	299.2	299.2	299.2	297.7	297.0	296.5	297.4	297.4	297.2	297.1
28	3.827	267.2	1.920	299.2	297.2	295.2	299.2	299.2	299.2	297.7	296.9	296.5	297.2	297.3	297.2	297.1
29	3.780	267.2	1.943	299.2	297.2	295.2	299.2	299.7	299.7	297.7	296.9	296.6	297.0	297.3	297.2	297.0
30	3.741	267.2	1.966	299.2	297.2	295.2	299.2	299.2	299.2	297.6	296.8	296.5	297.1	297.2	297.1	296.9
31	3.682	266.7	1.988	299.2	296.7	295.2	299.2	299.2	299.2	297.5	296.8	296.3	297.0	297.3	297.0	296.9
32	3.663	233.2	1.993	299.2	297.2	294.2	299.2	299.2	299.2	297.4	296.7	296.2	296.9	297.3	297.0	296.7
33	***	***	1.991	299.2	297.2	296.2	299.2	299.2	299.2	297.2	296.5	296.0	296.7	296.9	296.8	296.7
34	***	***	1.989	299.2	297.2	296.2	298.2	299.2	299.2	297.0	296.3	295.8	296.6	296.7	296.5	296.4
35	***	***	1.988	298.2	297.2	296.2	298.2	298.2	299.2	296.9	296.2	295.7	296.4	296.7	296.4	296.3
36	***	***	1.987	298.2	297.2	296.7	298.2	298.2	298.2	296.8	296.0	295.7	296.3	296.5	296.2	296.0
37	***	***	1.986	298.2	297.2	297.2	298.2	298.2	298.2	296.6	295.9	295.3	296.0	296.4	296.0	295.9
38	***	***	1.986	298.2	297.2	296.2	298.2	298.2	298.2	296.4	295.6	295.2	295.6	296.3	295.7	295.7
39	***	***	1.985	298.2	297.2	297.2	298.2	298.2	298.2	296.2	295.5	295.0	295.5	296.1	295.6	295.5
40	***	***	1.984	298.2	297.2	297.2	298.2	297.2	298.2	296.0	295.2	294.7	295.2	295.9	295.5	295.5
45	***	***	1.981	297.2	297.2	296.2	297.2	297.2	297.2	295.5	294.9	294.2	294.6	295.3	295.0	295.0
50	***	***	1.979	297.2	297.2	296.2	297.2	296.2	297.2	295.2	294.5	293.8	294.2	294.9	294.5	294.5
55	***	***	1.977	296.2	296.2	296.2	296.2	296.2	296.2	294.9	294.2	293.5	293.8	294.6	294.2	294.4
60	***	***	1.975	296.2	296.2	296.2	296.2	296.2	296.2	294.5	293.8	293.0	293.5	294.2	293.8	293.9

COORDINATES

I	R (M)	THETA (DEG)	Z (M)
1	0.0	***	-0.152
2	0.0	***	-0.076
3	0.0	***	0.0
4	0.0	***	0.076
5	0.0	***	0.152
6	0.0	***	0.229
7	0.0	***	0.530
8	0.0	***	0.610
9	0.0	***	0.686
10	0.0	***	0.762
11	0.0	***	0.838
12	0.0	***	0.914
13	0.0	***	0.991

Table 25B — Inferred Pressurant Distribution, Scaling Run 47, Test Configuration 1: One 1.52-cm Nozzle [(J)indicates thermocouple on an inlet jet centerline]

t (s)	$\bar{T}$ (°C)	$\bar{T}_s$ (°C)	$\bar{T}_p$ (°C)	β	β/θ	$\bar{X}$	Pressurant Fractions (X) at Locations I: 1	2	3(J)	4	5	6	7	8	9	10	11	12(J)	13
COMMENCE VALVE OPENING																			
0.0	17.3	17.3	155.5	2.4	0.0000	0.000	0.000	0.000	0.000	0.000	0.000	0.000	0.000	0.000	0.000	0.000	0.000	0.000	
1.0	18.6	18.5	25.0	180.4	2.7107	.015	-.020	-.020	.552	-.097	-.020	.056	-.036	-.005	-.036	-.036	-.036	-.066	-.082
VALVE FULLY OPEN																			
2.0	19.9	19.9	19.7	113.9	5.8157	.064	-1.875	6.97011	.392	.336	-1.875	.336	-1.875	-2.759	-2.317	-3.201	-2.317	-1.433	-.548
3.0	21.2	21.8	15.6	35.6	1.1030	.092	-.008	.234	.556	.073	-.008	.073	.040	.040	.040	-.008	.040	.057	.073
4.0	22.4	23.5	14.4	27.6	.8788	.121	.017	.238	.460	.072	.017	.072	.084	.084	.117	.072	.095	.128	.117
5.0	23.1	24.6	14.3	27.3	.7883	.146	.030	.272	.466	.078	.030	.127	.107	.136	.146	.098	.117	.146	.146
6.0	23.5	25.4	14.5	28.9	.7934	.169	.095	.372	.464	.048	.095	.141	.122	.132	.159	.132	.141	.141	.159
7.0	24.1	26.3	14.9	22.3	.5447	.189	.084	.347	.521	.128	.084	.128	.163	.163	.172	.154	.172	.172	.172
8.0	24.4	26.8	15.3	26.3	.7164	.211	.129	.390	.477	.172	.085	.172	.181	.181	.198	.181	.190	.190	.198
9.0	24.8	27.4	15.7	22.7	.5425	.230	.181	.436	.521	.138	.095	.138	.206	.215	.215	.206	.198	.215	.223
10.0	24.9	27.8	16.1	24.7	.5597	.247	.210	.423	.551	.167	.124	.167	.218	.227	.218	.210	.218	.235	.244
11.0	24.9	27.9	16.4	26.8	.6424	.265	.225	.487	.574	.182	.138	.182	.217	.234	.234	.234	.234	.251	.251
12.0	25.0	28.1	16.8	24.8	.5059	.280	.247	.511	.598	.203	.160	.203	.238	.238	.256	.247	.221	.256	.256
13.0	24.9	28.3	17.0	26.1	.5639	.295	.261	.528	.617	.216	.172	.216	.252	.261	.243	.261	.261	.279	.270
14.0	25.1	28.5	17.4	24.0	.4977	.310	.285	.464	.644	.240	.195	.240	.267	.276	.276	.276	.285	.294	.285
15.0	25.0	28.5	17.6	27.2	.5367	.323	.248	.564	.656	.242	.196	.242	.279	.298	.288	.270	.288	.288	.298
16.0	25.0	28.6	17.8	24.4	.4292	.335	.305	.583	.675	.259	.212	.259	.286	.296	.286	.296	.286	.305	.305
17.0	25.0	28.7	18.1	25.0	.4831	.348	.318	.552	.693	.271	.224	.271	.309	.318	.290	.309	.318	.309	.337
18.0	25.0	28.8	18.3	25.0	.4276	.359	.330	.519	.709	.282	.235	.282	.320	.330	.311	.339	.320	.348	.339
19.0	24.9	28.7	18.5	27.2	.6338	.373	.329	.573	.719	.329	.232	.280	.319	.339	.349	.339	.349	.349	.349
20.0	24.8	28.7	18.6	26.1	.4027	.383	.334	.631	.729	.285	.236	.285	.334	.354	.344	.344	.354	.364	.384
21.0	24.8	28.7	18.7	26.3	.4464	.393	.339	.640	.741	.390	.239	.289	.339	.370	.349	.349	.339	.370	.359
22.0	24.8	28.7	18.9	26.2	.4064	.403	.345	.650	.752	.396	.243	.294	.345	.365	.365	.365	.365	.375	.375
23.0	24.8	28.9	19.1	23.5	.3362	.411	.362	.566	.770	.413	.260	.311	.362	.372	.372	.382	.372	.403	.403
24.0	24.7	28.8	19.2	27.7	.4228	.420	.359	.672	.776	.411	.255	.307	.380	.380	.359	.391	.391	.391	.391
25.0	24.8	28.8	19.3	25.3	.3433	.428	.368	.684	.789	.421	.263	.316	.379	.389	.379	.389	.389	.400	.400
26.0	24.6	28.7	19.4	29.4	.4108	.436	.359	.683	.791	.413	.305	.359	.348	.402	.380	.391	.402	.413	.423
27.0	24.5	28.6	19.5	28.6	.3726	.443	.355	.686	.796	.410	.355	.410	.388	.388	.388	.377	.388	.410	.410
28.0	24.4	28.4	19.6	29.4	.4118	.451	.461	.687	.800	.405	.348	.405	.382	.394	.382	.394	.394	.405	.405
COMMENCE VALVE CLOSURE																			
29.0	24.5	28.5	19.7	25.2	.2939	.457	.474	.701	.815	.417	.303	.360	.394	.406	.383	.429	.417	.417	.429
30.0	24.4	28.4	19.8	24.1	.3649	.464	.468	.701	.817	.410	.352	.410	.399	.410	.387	.410	.410	.422	.434
VALVE FULLY CLOSED																			
31.0	24.3	28.3	19.8	22.0	.3337	.470	.466	.762	.822	.407	.348	.407	.407	.419	.407	.407	.407	.419	.431
32.0	25.0	29.3	20.2	-16.8	-.2548	.470	.457	.677	.897	.402	.347	.402	.413	.413	.413	.424	.391	.424	.446
33.0	24.7	28.9	20.1	6.5	.0989	.470	.462	.688	.688	.406	.349	.406	.440	.428	.440	.451	.440	.462	.451
34.0	24.4	28.5	19.9	6.8	.1029	.470	.439	.673	.673	.498	.323	.381	.439	.439	.439	.439	.439	.463	.463

XXX

Table 26A — Scaling Run 48, Test Configuration 4: One 1.52-cm Nozzle

t (s)	Press Tank P (atm)	T_t (K)	Chamber P (atm)	Chamber Absolute Temperatures (K) at Locations I 1	2	3	4	5	6	7	8	9	10	11	12	13
-5	***	***	1.015	294.2	294.2	294.2	294.2	294.2	294.2	293.4	273.2	292.1	293.4	293.2	293.2	293.1
-4	***	***	1.016	294.2	294.2	294.2	294.2	294.2	294.2	293.3	273.2	292.0	293.3	293.3	293.2	293.1
-3	***	***	1.016	294.2	294.2	294.2	294.2	294.2	294.2	293.3	273.2	292.0	293.3	293.3	293.2	293.1
-2	***	***	1.016	294.2	294.2	294.2	294.2	294.2	294.2	293.5	273.2	292.3	293.3	293.3	293.2	293.2
-1	***	***	1.015	294.2	294.2	294.2	294.2	294.2	294.2	293.4	273.2	292.2	293.3	293.1	293.2	293.1
0	6.303	294.2	1.016	294.2	294.2	294.2	294.2	294.2	294.2	293.3	273.2	292.0	293.3	293.3	293.2	293.1
1	6.284	294.2	1.016	294.2	294.2	294.2	294.2	294.2	294.2	293.4	273.2	292.3	293.2	293.4	293.2	293.1
2	6.173	334.2	1.048	295.2	295.2	294.2	294.2	295.2	295.2	294.4	273.2	293.3	294.8	294.5	294.5	294.2
3	6.024	280.2	1.094	297.2	296.7	296.2	296.7	296.7	296.7	296.5	273.2	294.9	296.3	296.2	296.1	295.9
4	5.942	279.2	1.136	299.2	298.2	298.2	298.2	298.2	298.2	297.9	273.2	296.0	297.8	297.5	297.5	297.3
5	5.782	278.2	1.176	299.7	299.7	299.2	299.2	299.7	299.7	298.8	273.2	297.3	298.7	298.7	298.6	298.4
6	5.693	278.2	1.214	301.2	300.2	300.2	300.2	300.2	300.2	299.9	273.2	298.1	299.3	299.2	299.0	299.0
7	5.589	277.7	1.262	301.2	301.2	300.7	300.7	301.2	301.2	300.4	273.2	298.9	300.2	299.8	299.9	299.7
8	5.480	277.2	1.297	302.2	301.2	301.2	301.2	302.2	302.2	300.7	273.2	299.1	300.5	300.3	300.3	300.1
9	5.344	277.2	1.331	302.2	302.2	301.2	301.2	302.2	302.2	301.0	273.2	299.3	300.6	300.5	300.4	300.4
10	5.226	276.7	1.364	302.2	302.2	302.2	302.2	302.2	302.2	301.1	273.2	299.5	300.7	300.6	300.4	300.4
11	5.146	276.2	1.396	302.2	302.2	302.2	302.2	302.2	302.2	301.3	273.2	299.7	300.7	300.7	300.6	300.6
12	5.076	276.2	1.429	302.2	302.2	302.2	302.2	302.2	302.2	301.4	273.2	299.7	300.7	300.6	300.7	300.8
13	5.002	275.2	1.460	302.2	302.2	302.2	302.2	302.2	302.2	301.2	273.2	299.8	300.9	300.5	300.9	300.8
14	4.922	275.2	1.491	302.2	302.2	302.2	302.2	302.2	302.2	301.3	273.2	299.8	300.9	300.6	300.8	300.8
15	4.840	275.2	1.522	302.2	302.2	302.2	302.2	302.2	302.2	301.2	273.2	299.7	300.9	300.5	300.6	300.5
16	4.734	275.2	1.551	302.2	302.2	302.2	302.2	302.2	302.2	301.0	273.2	299.5	300.9	300.5	300.5	300.5
17	4.637	274.7	1.580	302.2	302.2	302.2	302.2	302.2	302.2	301.0	273.2	299.5	300.8	300.7	300.5	300.6
18	4.539	274.2	1.609	302.2	302.2	302.2	302.2	302.2	302.2	301.0	273.2	299.5	300.9	300.8	300.6	300.5
19	4.467	274.2	1.637	302.2	302.2	302.2	302.2	302.2	302.2	301.3	273.2	299.6	300.7	300.6	300.5	300.5
20	4.436	274.2	1.664	302.2	302.2	302.2	302.2	302.2	302.2	300.9	273.2	299.4	300.7	300.4	300.4	300.5
21	4.323	274.2	1.692	302.2	302.2	302.2	302.2	302.2	302.2	301.0	273.2	299.5	300.5	300.5	300.5	300.5
22	4.263	273.2	1.728	302.2	302.2	302.2	302.2	302.2	302.2	300.8	273.2	299.4	300.6	300.4	300.4	300.3
23	4.150	273.2	1.754	302.2	302.2	302.2	302.2	302.2	302.2	300.9	273.2	299.3	300.4	300.4	300.3	300.3
24	4.107	273.2	1.780	302.2	302.2	302.2	302.2	302.2	302.2	300.9	273.2	299.4	300.5	300.2	300.3	300.3
25	4.048	274.2	1.806	302.2	302.2	302.2	302.2	302.2	302.2	300.7	273.2	299.1	300.4	300.3	300.2	300.2
26	3.968	273.7	1.830	302.2	302.2	301.7	302.2	302.2	302.2	300.8	273.2	299.2	300.3	300.2	300.1	300.2
27	3.912	273.2	1.855	302.2	302.2	302.2	302.2	302.2	302.2	300.5	273.2	299.1	300.2	300.3	300.2	300.1
28	3.859	273.2	1.879	302.2	301.2	301.2	301.2	302.2	302.2	300.5	273.2	299.1	300.2	300.1	300.1	300.0
29	3.770	273.2	1.903	301.2	301.2	301.2	301.2	301.7	302.2	300.6	273.2	299.0	300.2	300.3	300.1	300.0
30	3.749	273.2	1.926	301.2	301.2	301.2	301.2	301.2	302.2	300.4	273.2	299.0	300.2	300.0	300.0	300.0
31	3.673	273.2	1.949	301.2	301.2	301.2	301.2	301.7	301.7	300.3	273.2	298.8	299.9	300.0	299.9	299.9
32	3.632	273.2	1.968	301.2	301.2	301.2	301.2	301.2	302.2	300.3	273.2	299.0	300.0	299.9	299.9	300.0
33	3.559	270.2	1.993	301.2	301.2	301.2	301.2	301.2	301.2	300.3	273.2	298.8	300.0	300.0	299.9	299.9
34	3.589	269.2	1.994	301.2	301.2	301.2	301.2	301.2	301.2	300.1	273.2	298.8	300.0	299.8	299.8	299.7
35	***	***	1.992	301.2	301.2	301.2	301.2	301.2	301.2	300.0	273.2	298.7	299.6	299.9	299.7	299.5
36	***	***	1.990	301.2	301.2	301.2	301.2	301.2	301.2	299.8	273.2	298.5	299.7	299.6	299.5	299.5
37	***	***	1.989	300.2	300.2	300.2	300.2	300.2	301.2	299.5	273.2	298.7	299.7	299.5	299.5	299.5
38	***	***	1.988	300.2	300.2	300.2	300.2	300.2	300.2	299.6	273.2	298.4	299.6	299.5	299.5	299.4
39	***	***	1.986	300.2	300.2	300.2	300.2	300.2	300.2	299.6	273.2	298.1	299.4	299.2	299.1	299.1
40	***	***	1.986	300.2	300.2	300.2	300.2	300.2	300.2	299.4	273.2	298.1	299.1	299.2	299.1	299.0
41	***	***	1.985	300.2	300.2	300.2	300.2	300.2	300.2	299.0	273.2	297.7	299.0	299.0	298.8	298.8
42	***	***	1.984	300.2	300.2	300.2	300.2	300.2	300.2	299.0	273.2	297.8	298.9	298.8	298.8	298.7
47	***	***	1.980	299.2	299.2	299.2	299.7	299.7	300.2	298.6	273.2	297.4	298.3	298.3	298.3	298.4
52	***	***	1.978	299.2	299.2	299.2	299.2	299.2	299.2	298.1	273.2	296.8	298.1	298.1	298.0	298.0

COORDINATES

I	R (M)	THETA (DEG)	Z (M)
1	0.457	45	-0.152
2	0.457	45	-0.076
3	0.457	45	0.0
4	0.457	45	0.076
5	0.457	45	0.152
6	0.457	45	0.229
7	0.457	45	0.530
8	0.457	45	0.610
9	0.457	45	0.686
10	0.457	45	0.762
11	0.457	45	0.838
12	0.457	45	0.914
13	0.457	45	0.991

Table 26B — Inferred Pressurant Distribution, Scaling Run 48, Test Configuration 4: One 1.52-cm Nozzle

t (s)	$\bar{T}$ (°C)	$\bar{T}_s$ (°C)	$\bar{T}_r$ (°C)	β	β/θ	$\bar{X}$	1	2	3	4	5	6	7	8	9	10	11	12	13
							Pressurant Fractions (X) at Locations I												
COMMENCE VALVE OPENING																			
0.0	18.8	18.8	495.1	-.1	0.0000	0.000	0.000	0.000	0.000	0.000	0.000	0.000	0.000	0.000	0.000	0.000	0.000	0.000	
1.0	18.9	18.9	22.2	33562.8	-7.0511	-.000	-.012	-.012	-.012	-.012	-.012	-.012	.048	-.012	.078	-.042	.018	-.012	-.012
VALVE FULLY OPEN																			
2.0	19.7	19.1	41.0	628.3	17.6477	.028	.032	.032	-.013	-.013	.032	.032	.042	-.013	.046	.055	.042	.046	.037
3.0	21.4	21.2	23.6	135.8	5.0773	.063	.261	.054	-.134	.054	.054	.054	.383	-.982	.219	.261	.219	.219	.178
4.0	22.8	23.1	19.6	42.0	1.3837	.094	-.214	.070	.070	.070	.070	.070	-.129	1.204	.041	-.072	.013	-.015	.041
5.0	23.8	24.3	18.5	34.0	1.0576	.121	.030	.030	.114	.114	.030	.030	.014	.947	.064	.047	.047	.047	.064
6.0	24.5	25.5	18.4	32.5	.9598	.147	-.043	.097	.097	.097	.097	.097	-.001	.933	.083	.111	.111	.124	.111
7.0	25.1	26.5	18.6	30.7	1.1229	.178	.088	.088	.151	.151	.088	.088	.063	.973	.101	.101	.151	.126	.139
8.0	25.6	27.2	18.9	27.7	.7163	.199	.048	.168	.168	.168	.048	.048	.108	1.011	.156	.144	.180	.168	.168
9.0	25.8	27.6	19.2	29.9	.7562	.219	.091	.091	.210	.210	.091	.091	.115	1.046	.174	.174	.186	.186	.174
10.0	26.0	28.0	19.5	28.7	.6838	.237	.133	.133	.133	.133	.133	.133	.145	1.082	.192	.204	.216	.228	.216
11.0	26.0	28.2	19.8	29.6	.6801	.254	.158	.158	.158	.158	.158	.158	.146	1.113	.194	.230	.230	.230	.218
12.0	26.1	28.3	20.0	30.0	.6986	.271	.177	.177	.177	.177	.177	.177	.152	1.144	.213	.249	.261	.237	.213
13.0	26.1	28.4	20.2	29.6	.6335	.287	.194	.194	.194	.194	.194	.194	.194	1.172	.218	.243	.279	.230	.230
14.0	26.1	28.5	20.4	29.7	.6241	.302	.208	.208	.208	.208	.208	.208	.195	1.197	.232	.257	.294	.257	.245
15.0	26.0	28.5	20.6	30.6	.6339	.316	.214	.214	.214	.214	.214	.214	.214	1.224	.252	.265	.302	.290	.277
16.0	26.0	28.5	20.8	31.0	.5910	.329	.218	.218	.218	.218	.218	.218	.244	1.250	.282	.269	.321	.308	.295
17.0	26.0	28.6	21.0	29.7	.5488	.341	.230	.230	.230	.230	.230	.230	.257	1.278	.296	.296	.309	.322	.296
18.0	26.0	28.7	21.1	29.4	.5329	.353	.243	.243	.243	.243	.243	.243	.270	1.302	.309	.296	.309	.322	.323
19.0	26.0	28.7	21.3	29.7	.5131	.364	.252	.252	.252	.252	.252	.252	.252	1.324	.305	.332	.346	.332	.332
20.0	25.9	28.7	21.4	31.2	.5173	.375	.250	.250	.250	.250	.250	.250	.292	1.344	.333	.333	.374	.360	.333
21.0	26.0	28.7	21.5	25.1	.4834	.385	.264	.264	.264	.264	.264	.264	.251	1.369	.319	.360	.374	.360	.347
22.0	25.9	28.7	21.6	30.6	.6515	.398	.265	.265	.265	.265	.265	.265	.322	1.394	.350	.364	.392	.378	.378
23.0	25.9	28.7	21.7	30.1	.4521	.407	.270	.270	.270	.270	.270	.270	.313	1.410	.370	.398	.398	.398	.384
24.0	25.9	28.7	21.8	30.0	.4434	.415	.275	.275	.275	.275	.275	.275	.318	1.427	.361	.390	.433	.419	.404
25.0	25.8	28.7	21.9	31.0	.4531	.424	.275	.275	.275	.275	.275	.275	.348	1.447	.407	.407	.422	.422	.407
26.0	25.8	28.7	22.0	31.8	.4258	.432	.272	.272	.347	.272	.272	.272	.332	1.468	.391	.436	.436	.436	.406
27.0	25.8	28.7	22.1	29.8	.4029	.439	.280	.280	.280	.280	.280	.280	.386	1.488	.416	.446	.431	.431	.431
28.0	25.5	28.4	22.0	37.2	.5093	.447	.243	.400	.400	.400	.243	.243	.337	1.497	.384	.416	.431	.416	.400
29.0	25.4	28.2	22.0	34.9	.4560	.454	.387	.387	.387	.387	.387	.227	.323	1.512	.387	.403	.387	.403	.403
30.0	25.3	28.1	22.1	34.7	.4266	.461	.379	.379	.379	.379	.379	.214	.346	1.529	.379	.395	.428	.411	.395
COMMENCE VALVE CLOSURE																			
31.0	25.3	28.1	22.1	34.4	.4157	.467	.373	.373	.373	.373	.289	.289	.356	1.546	.407	.440	.423	.423	.407
32.0	25.3	28.1	22.2	-2281.8	.3004	.472	.383	.383	.383	.383	.383	.214	.366	1.564	.383	.416	.450	.433	.400
VALVE FULLY CLOSED																			
33.0	25.2	28.0	22.2	-3436.6	.4524	.479	.371	.371	.371	.371	.371	.371	.354	1.571	.405	.422	.422	.422	.405
34.0	25.4	28.2	22.3	441.3	-.0581	.479	.364	.364	.364	.364	.364	.364	.380	1.544	.397	.414	.448	.431	.431

Table 27A — Scaling Run 49, Test Configuration 4: One 1.52-cm Nozzle

t (s)	Press Tank P (atm)	T_s (K)	Chamber P (atm)	Chamber Absolute Temperatures (K) at Locations I: 1	2	3	4	5	6	7	8	9	10	11	12	13
-5	***	***	1.017	294.2	294.2	294.2	294.2	294.2	294.2	293.5	292.4	292.2	292.2	293.5	293.3	293.2
-4	***	***	1.016	294.2	294.2	294.2	294.2	294.2	294.2	293.4	292.4	292.3	293.5	293.3	293.3	293.2
-3	***	***	1.017	294.2	294.2	294.2	294.2	294.2	294.2	293.3	292.4	292.0	293.4	293.5	293.3	293.2
-2	***	***	1.016	294.2	294.2	294.2	294.2	294.2	294.2	293.6	292.4	292.3	293.5	293.4	293.3	293.2
-1	***	***	1.017	294.2	294.2	294.2	294.2	294.2	294.2	293.4	292.4	292.0	293.4	293.5	293.3	293.2
0	6.278	298.7	1.020	294.7	294.2	294.2	294.2	294.2	294.7	293.7	292.7	292.5	293.6	293.5	293.5	293.3
1	6.150	284.2	1.057	296.2	296.2	295.2	296.2	296.2	296.2	294.9	294.4	293.7	295.3	295.1	294.9	294.6
2	6.030	279.2	1.101	297.2	297.2	296.2	297.2	297.2	297.2	297.0	295.8	295.4	296.8	296.5	296.5	296.4
3	5.911	278.2	1.144	299.2	298.7	298.7	298.7	298.7	298.7	298.1	297.4	296.5	298.1	297.8	297.7	297.6
4	5.777	278.2	1.183	300.2	300.2	299.2	299.2	300.2	300.2	299.2	298.3	297.5	298.9	298.9	298.8	298.6
5	5.660	277.7	1.232	301.2	300.7	300.2	300.7	300.7	300.7	300.3	299.0	298.8	300.0	299.7	299.7	299.7
6	5.567	277.2	1.268	301.2	301.2	301.2	301.2	301.2	301.2	300.9	299.5	299.1	300.3	300.0	300.1	299.9
7	5.455	276.7	1.303	302.2	302.2	301.7	301.7	302.2	302.2	301.0	299.8	299.2	300.7	300.4	300.3	300.3
8	5.338	276.2	1.337	302.2	302.2	302.2	302.2	302.2	302.2	301.2	300.0	299.5	300.9	300.6	300.6	300.6
9	5.225	276.2	1.371	302.2	302.2	302.2	302.2	302.2	302.2	301.4	300.3	299.7	301.0	300.9	300.8	300.7
10	5.141	276.2	1.402	302.2	302.2	302.2	302.2	302.2	302.2	301.6	300.3	300.0	301.1	301.2	301.0	300.9
11	5.061	275.2	1.435	302.2	302.2	302.2	302.2	302.2	302.2	301.8	300.4	300.2	301.1	301.0	301.0	301.0
12	4.983	275.2	1.466	302.2	302.2	302.2	302.2	302.2	302.2	301.7	300.3	300.2	301.2	300.9	300.9	300.9
13	4.902	275.2	1.497	302.2	302.2	302.2	302.2	302.2	302.2	301.7	300.3	300.2	301.2	300.9	301.0	301.0
14	4.847	274.7	1.528	302.2	302.2	302.2	302.2	302.2	302.2	301.6	300.2	300.2	301.3	301.0	301.1	301.0
15	4.756	274.2	1.558	302.2	302.2	302.2	302.2	302.2	302.2	301.5	300.2	300.0	301.2	300.9	300.9	300.9
16	4.654	274.2	1.587	302.2	302.2	302.2	302.2	302.2	302.2	301.2	300.1	299.9	301.0	300.9	300.9	300.9
17	4.558	274.2	1.615	302.2	302.2	302.2	302.2	302.2	302.2	301.3	300.1	299.9	300.9	300.9	300.9	300.9
18	4.508	273.2	1.643	302.2	302.2	302.2	302.2	302.2	302.2	301.2	300.0	299.5	301.0	300.8	300.7	300.9
19	4.396	273.2	1.671	302.2	302.2	302.2	302.2	302.2	302.2	301.2	300.0	299.8	300.8	300.8	300.8	300.7
20	4.331	273.2	1.708	302.2	302.2	302.2	302.2	302.2	302.2	301.0	299.9	299.5	300.9	300.8	300.7	300.7
21	4.217	273.2	1.725	302.2	302.2	302.2	302.2	302.2	302.2	301.2	300.0	299.6	300.7	300.8	300.6	300.6
22	4.198	273.2	1.761	302.2	302.2	302.2	302.2	302.2	302.2	301.0	299.8	299.5	300.9	300.5	300.5	300.5
23	4.086	273.2	1.787	302.2	302.2	302.2	302.2	302.2	302.2	300.9	299.7	299.5	300.5	300.6	300.4	300.4
24	4.046	273.2	1.812	302.2	302.2	302.2	302.2	302.2	302.2	300.9	299.7	299.5	300.7	300.4	300.5	300.4
25	3.958	273.2	1.837	302.2	302.2	302.2	302.2	302.2	302.2	300.9	299.6	299.3	300.3	300.6	300.4	300.3
26	3.934	273.2	1.862	302.2	302.2	302.2	302.2	302.2	302.2	300.8	299.6	299.4	300.5	300.4	300.3	300.3
27	3.833	273.2	1.887	302.2	302.2	302.2	302.2	302.2	302.2	300.9	299.7	299.5	300.4	300.6	300.4	300.3
28	3.816	273.2	1.910	302.2	302.2	302.2	302.2	302.2	302.2	300.8	299.5	299.5	300.5	300.3	300.3	300.3
29	3.748	273.2	1.934	302.2	302.2	302.2	302.2	302.2	302.2	300.8	299.6	299.3	300.5	300.3	300.2	300.2
30	3.674	273.2	1.956	302.2	302.2	301.2	302.2	302.2	302.2	300.9	299.4	299.4	300.3	300.2	300.2	300.2
31	3.672	273.2	1.979	302.2	302.2	302.2	302.2	302.2	302.2	300.5	299.5	299.1	300.4	300.2	300.1	300.1
32	3.596	267.2	1.994	302.2	302.2	301.2	302.2	302.2	301.2	300.7	299.4	299.1	300.2	300.0	300.0	300.0
33	3.641	264.7	1.992	301.2	301.2	301.2	301.2	301.2	301.2	300.2	299.2	298.8	300.1	300.0	299.9	299.9
34	***	***	1.990	301.2	301.2	301.2	301.2	301.2	301.2	300.3	299.0	299.0	300.1	300.0	299.8	299.8
35	***	***	1.989	301.2	301.2	301.2	301.2	301.2	301.2	300.2	299.0	298.8	299.8	300.0	299.8	299.7
36	***	***	1.988	301.2	301.2	301.2	301.2	301.2	301.2	300.0	298.8	298.7	299.7	299.7	299.5	299.5
37	***	***	1.987	300.2	301.2	301.2	301.2	301.2	301.2	300.0	298.6	298.7	299.5	299.5	299.5	299.5
38	***	***	1.986	300.2	300.7	300.2	301.2	300.7	300.7	299.6	298.6	298.4	299.5	299.5	299.3	299.4
39	***	***	1.985	300.2	300.2	300.2	300.2	300.2	300.2	299.5	298.5	298.4	299.5	299.4	299.2	299.2
40	***	***	1.984	300.2	300.2	300.2	300.2	300.2	300.2	299.5	298.4	298.4	299.3	299.5	299.2	299.1
41	***	***	1.984	300.2	300.2	300.2	300.2	300.2	300.2	299.4	298.2	298.0	299.3	299.4	298.9	298.9
46	***	***	1.981	300.2	300.2	300.2	300.2	300.2	300.2	298.7	297.5	297.7	298.6	298.8	298.6	298.5
51	***	***	1.978	299.2	299.2	299.2	299.2	299.2	299.2	298.5	297.4	297.2	298.2	298.3	298.0	298.0
56	***	***	1.977	299.2	299.2	299.2	299.2	299.2	299.2	298.1	297.1	296.8	297.8	298.2	297.7	297.6

COORDINATES

I	R (M)	THETA (DEG)	Z (M)
1	0.457	45	-0.152
2	0.457	45	-0.076
3	0.457	45	0.0
4	0.457	45	0.076
5	0.457	45	0.152
6	0.457	45	0.229
7	0.457	45	0.530
8	0.457	45	0.610
9	0.457	45	0.687
10	0.457	45	0.762
11	0.457	45	0.838
12	0.457	45	0.914
13	0.457	45	0.991

Table 27B — Inferred Pressurant Distribution, Scaling Run 49, Test Configuration 4: One 1.52-cm Nozzle

t (s)	$\bar{T}$ (°C)	$\bar{T}_c$ (°C)	$\bar{T}_p$ (°C)	β	β/θ	$\bar{X}$	Pressurant Fractions (X) at Locations I 1	2	3	4	5	6	7	8	9	10	11	12	13
CONMENCE VALVE OPENING																			
0.0	20.6	20.6	141.9	4.4	0.0000	0.000	0.000	0.000	0.000	0.000	0.000	0.000	0.000	0.000	0.000	0.000	0.000	0.000	
1.0	22.1	22.2	20.3	202.4	6.1496	.030	.054	-.210	.319	-.210	-.210	.054	.213	-.052	.213	-.052	.001	.107	.160
VALVE FULLY OPEN																			
2.0	23.5	23.9	17.5	68.6	2.4035	.064	.127	.049	.206	.049	.049	.127	.002	.033	.064	.017	.049	.033	.033
3.0	24.9	25.8	16.9	33.3	1.1106	.095	.081	.081	.081	.081	.081	.138	.093	.059	.138	.081	.104	.115	.104
4.0	26.0	27.2	17.2	28.7	.8629	.122	.113	.063	.164	.164	.063	.113	.113	.103	.164	.133	.123	.133	.133
5.0	26.9	28.5	18.0	27.7	1.0398	.154	.138	.138	.186	.138	.138	.186	.129	.157	.167	.148	.167	.167	.148
6.0	27.3	29.2	18.6	27.5	.7521	.177	.202	.155	.155	.155	.155	.202	.137	.174	.193	.184	.202	.193	.193
7.0	27.9	30.0	19.1	23.5	.5979	.198	.179	.134	.179	.179	.134	.179	.198	.216	.253	.216	.234	.243	.225
8.0	28.1	30.4	19.5	26.2	.6566	.218	.218	.172	.172	.172	.172	.218	.218	.237	.264	.237	.255	.255	.237
9.0	28.2	30.7	20.0	26.9	.6665	.237	.247	.200	.200	.200	.200	.247	.228	.247	.275	.256	.256	.265	.256
10.0	28.3	31.0	20.4	26.2	.5769	.253	.274	.226	.226	.226	.226	.274	.236	.264	.274	.274	.255	.274	.264
11.0	28.3	31.1	20.7	27.0	.6263	.270	.293	.245	.245	.245	.245	.293	.245	.274	.274	.293	.293	.293	.274
12.0	28.3	31.2	21.0	27.5	.5889	.286	.307	.258	.258	.258	.258	.307	.258	.297	.287	.297	.317	.317	.297
13.0	28.3	31.3	21.3	26.7	.5377	.301	.325	.274	.274	.274	.274	.325	.274	.315	.305	.315	.335	.315	.305
14.0	28.3	31.4	21.6	27.0	.5524	.315	.339	.288	.288	.288	.288	.339	.298	.339	.319	.319	.339	.329	.319
15.0	28.2	31.4	21.8	27.9	.5473	.328	.347	.294	.294	.294	.294	.347	.315	.347	.347	.336	.357	.357	.336
16.0	28.2	31.4	22.0	27.9	.5154	.341	.354	.300	.300	.300	.300	.354	.354	.364	.364	.364	.364	.364	.343
17.0	28.2	31.4	22.2	27.1	.4731	.352	.365	.311	.311	.311	.311	.365	.355	.376	.376	.387	.376	.376	.355
18.0	28.1	31.4	22.4	28.1	.4888	.363	.370	.315	.315	.315	.315	.370	.370	.392	.425	.381	.392	.403	.359
19.0	28.1	31.5	22.5	27.2	.4603	.374	.379	.323	.323	.323	.323	.379	.379	.401	.401	.424	.401	.413	.390
20.0	28.1	31.5	22.7	27.4	.6032	.388	.389	.332	.332	.332	.332	.389	.412	.423	.446	.412	.412	.423	.401
21.0	28.1	31.5	22.9	27.0	.4236	.397	.399	.341	.341	.341	.341	.399	.399	.422	.445	.445	.422	.445	.422
22.0	28.0	31.5	23.0	28.3	.4261	.406	.402	.343	.343	.343	.343	.402	.425	.460	.448	.425	.448	.460	.437
23.0	28.0	31.4	23.1	28.7	.4271	.415	.403	.343	.343	.343	.343	.403	.439	.463	.463	.479	.451	.479	.451
24.0	28.0	31.5	23.2	27.3	.3781	.423	.412	.351	.351	.351	.351	.412	.448	.472	.472	.460	.484	.472	.460
25.0	27.9	31.4	23.3	28.9	.4006	.431	.413	.351	.351	.351	.351	.413	.450	.487	.499	.511	.462	.487	.474
26.0	27.9	31.4	23.4	27.9	.3774	.439	.419	.357	.357	.357	.357	.419	.469	.494	.494	.482	.494	.507	.494
27.0	28.0	31.5	23.6	26.6	.3517	.446	.431	.368	.368	.368	.368	.431	.469	.494	.494	.520	.482	.507	.494
28.0	27.9	31.4	23.6	29.4	.3616	.453	.430	.366	.366	.366	.366	.430	.481	.520	.494	.494	.533	.533	.507
29.0	27.9	31.4	23.7	28.0	.3505	.459	.435	.371	.371	.371	.371	.435	.487	.513	.526	.513	.526	.539	.513
CONMENCE VALVE CLOSURE																			
30.0	27.8	31.3	23.8	31.2	.3643	.466	.427	.361	.493	.361	.361	.427	.467	.533	.507	.546	.533	.533	.507
31.0	27.8	31.3	23.9	10.3	.3162	.472	.437	.370	.370	.370	.370	.437	.531	.531	.557	.531	.544	.557	.531
VALVE FULLY CLOSED																			
32.0	27.6	31.1	23.8	9.0	.2785	.476	.418	.350	.486	.350	.350	.554	.486	.526	.540	.540	.540	.540	.513
33.0	27.3	30.7	23.6	3.5	.1090	.476	.496	.423	.423	.423	.423	.496	.496	.496	.524	.496	.496	.510	.482
34.0	27.0	30.3	23.4	3.7	.1140	.476	.495	.423	.423	.423	.423	.495	.495	.510	.495	.495	.495	.524	.495

Table 28A — Scaling Run 50, Test Configuration 4: One 1.52-cm Nozzle

t (s)	Press Tank P (atm)	T_t (K)	Chamber P (atm)	Chamber Absolute Temperatures (K) at Locations i 1	2	3	4	5	6	7	8	9	10	11	12	13
-5	***	***	1.017	295.2	294.2	294.2	294.2	295.2	295.2	293.8	292.6	292.6	293.7	293.8	293.7	293.5
-4	***	***	1.016	295.2	294.2	294.2	295.2	295.2	295.2	293.8	292.8	292.4	293.8	293.8	293.7	293.5
-3	***	***	1.017	295.2	294.2	294.2	295.2	295.2	295.2	293.9	292.6	292.6	293.8	293.7	293.6	293.6
-2	***	***	1.016	295.2	294.2	294.2	295.2	295.2	295.2	293.8	292.8	292.4	293.8	293.8	293.6	293.5
-1	***	***	1.017	295.2	294.2	294.2	295.2	295.2	295.2	293.8	292.7	292.4	293.6	293.9	293.7	293.5
0	6.309	293.2	1.018	295.2	294.2	294.2	295.2	295.2	295.2	293.9	292.9	292.6	294.0	293.8	293.7	293.5
1	6.126	291.2	1.054	295.7	295.7	294.7	295.7	295.7	295.7	295.0	294.5	293.8	295.2	295.2	295.1	294.8
2	6.039	279.2	1.099	298.2	297.2	297.2	297.2	297.2	297.2	297.0	296.1	295.4	297.0	296.8	296.8	296.5
3	5.888	278.7	1.141	299.7	298.7	298.7	298.7	298.7	299.2	298.4	297.5	296.7	298.2	298.1	298.1	297.8
4	5.809	278.2	1.180	300.2	300.2	299.2	300.2	300.2	300.2	299.6	298.4	298.0	299.5	298.9	299.0	298.9
5	5.704	277.2	1.219	301.2	300.7	300.7	300.7	301.2	301.2	300.2	299.0	298.5	300.1	299.6	299.5	299.7
6	5.565	277.2	1.254	302.2	301.2	301.2	301.2	302.2	302.2	300.8	299.6	299.0	300.5	300.4	300.2	300.0
7	5.471	277.2	1.290	302.2	302.2	301.2	302.2	302.2	302.2	301.3	300.0	299.7	300.6	300.9	300.6	300.6
8	5.371	276.7	1.324	302.2	302.2	302.2	302.2	302.2	302.2	301.5	300.2	299.8	300.9	301.0	300.9	300.9
9	5.259	276.2	1.360	303.2	302.2	302.2	302.2	302.2	302.2	301.7	300.3	300.2	301.2	301.0	301.1	301.1
10	5.172	276.2	1.401	303.2	302.2	302.2	302.2	302.7	302.7	301.8	300.3	300.2	301.2	300.9	301.2	301.2
11	5.106	275.2	1.434	303.2	303.2	302.2	303.2	303.2	303.2	301.8	300.4	300.4	301.5	301.1	301.2	301.2
12	5.020	275.2	1.465	303.2	303.2	302.2	302.7	303.2	303.2	302.0	300.5	300.4	301.7	301.2	301.2	301.2
13	4.908	275.2	1.496	303.2	303.2	303.2	303.2	303.2	303.2	301.8	300.4	300.1	301.5	301.2	301.0	301.2
14	4.798	274.2	1.526	303.2	303.2	302.2	302.2	302.2	303.2	301.7	300.4	300.0	301.4	301.2	301.1	301.1
15	4.711	274.2	1.556	303.2	302.7	302.2	302.7	303.2	303.2	301.7	300.5	300.1	301.5	301.3	301.1	301.2
16	4.626	274.2	1.585	303.2	303.2	302.2	303.2	303.2	303.2	301.6	300.4	299.9	301.4	301.2	301.0	301.2
17	4.541	274.2	1.614	303.2	302.2	302.2	302.2	302.2	302.7	301.5	300.4	300.0	301.4	301.3	301.1	301.1
18	4.461	273.2	1.642	302.2	302.2	302.2	302.2	302.2	302.2	301.7	300.3	300.0	301.0	301.2	301.0	301.0
19	4.424	273.2	1.669	303.2	302.2	302.2	302.2	302.2	302.2	301.5	300.3	300.1	301.3	301.0	301.0	301.0
20	4.319	273.2	1.697	302.7	302.2	302.2	302.2	302.2	302.7	301.6	300.2	300.0	301.0	301.2	301.0	300.9
21	4.270	273.2	1.724	302.2	302.2	302.2	302.2	302.2	302.2	301.5	300.2	300.0	301.2	300.9	301.0	300.9
22	4.197	273.2	1.751	302.2	302.2	302.2	302.2	302.2	302.2	301.2	300.2	299.7	300.9	301.0	300.9	300.9
23	4.117	273.2	1.777	302.2	302.2	302.2	302.2	302.2	302.2	301.4	300.0	299.9	300.9	300.9	300.9	300.9
24	4.061	273.2	1.811	302.2	302.2	302.2	302.2	302.2	302.2	301.2	300.2	299.7	300.9	300.9	300.8	300.7
25	3.972	273.2	1.836	302.2	302.2	302.2	302.2	302.2	302.2	301.3	299.7	299.7	300.8	300.6	300.8	300.8
26	3.921	273.2	1.861	302.2	302.2	302.2	302.2	302.2	302.2	301.0	300.0	299.5	300.9	300.9	300.7	300.7
27	3.839	273.2	1.885	302.2	302.2	302.2	302.2	302.2	302.2	301.3	299.7	299.7	300.6	300.6	300.6	300.6
28	3.809	273.2	1.909	302.2	302.2	302.2	302.2	302.2	302.2	301.0	299.8	299.5	300.8	300.7	300.5	300.5
29	3.732	273.2	1.932	302.2	302.2	302.2	302.2	302.2	302.2	301.2	299.7	299.8	300.8	300.5	300.6	300.6
30	3.693	273.2	1.955	302.2	302.2	302.2	302.2	302.2	302.2	301.0	300.0	299.5	300.8	300.8	300.6	300.5
31	3.635	273.2	1.978	302.2	302.2	302.2	302.2	302.2	302.2	301.1	299.7	299.7	300.8	300.4	300.6	300.4
32	3.613	267.2	1.994	302.2	302.2	302.2	302.2	302.2	302.2	300.8	299.6	299.3	300.5	300.5	300.3	300.4
33	3.599	262.2	1.994	302.2	302.2	302.2	302.2	302.2	302.2	300.7	299.5	299.5	300.4	300.0	300.4	300.3
34	***	***	1.992	301.2	301.7	301.2	301.2	301.2	301.7	300.5	299.4	299.0	300.5	300.3	300.2	300.1
35	***	***	1.990	301.2	301.2	301.2	301.2	301.2	301.2	300.6	299.4	299.3	300.2	300.2	300.2	300.0
36	***	***	1.989	301.2	301.2	301.2	301.2	301.2	301.2	300.3	299.2	299.0	300.3	300.2	300.0	300.0
37	***	***	1.988	301.2	301.2	301.2	301.2	301.2	301.2	300.4	299.1	299.1	300.1	300.2	300.0	299.9
38	***	***	1.987	301.2	301.2	301.2	301.2	301.2	301.2	300.2	299.0	298.8	300.0	300.0	299.8	299.7
39	***	***	1.986	301.2	301.2	300.7	301.2	301.2	301.2	300.2	298.8	299.0	300.1	299.8	299.9	299.7
40	***	***	1.986	301.2	300.2	300.2	301.2	301.2	301.2	300.0	298.9	298.8	299.9	300.0	299.7	299.5
41	***	***	1.984	300.2	300.2	300.2	300.2	300.2	301.2	299.9	298.8	298.5	299.9	299.7	299.5	299.5
46	***	***	1.982	300.2	300.2	300.2	300.2	300.2	300.2	299.4	298.1	298.0	299.6	299.3	299.0	299.0
51	***	***	1.980	300.2	300.2	300.2	300.2	300.2	300.2	299.0	297.9	297.6	298.8	298.8	298.8	298.7
56	***	***	1.978	299.2	299.2	299.2	299.2	299.2	300.2	298.6	297.5	297.3	298.2	298.6	298.3	298.2

COORDINATES

I	R (M)	THETA (DEG)	Z (M)
1	0.457	45	-0.152
2	0.457	45	-0.076
3	0.457	45	0.0
4	0.457	45	0.076
5	0.457	45	0.152
6	0.457	45	0.229
7	0.457	45	0.530
8	0.457	45	0.610
9	0.457	45	0.687
10	0.457	45	0.762
11	0.457	45	0.838
12	0.457	45	0.914
13	0.457	45	0.991

Table 28B — Inferred Pressurant Distribution, Scaling Run 50, Test Configuration 4: One 1.52-cm Nozzle

t (s)	$\bar{T}$ (°C)	$\bar{T}_e$ (°C)	$\bar{T}_p$ (°C)	β	β/θ	$\bar{X}$	Pressurant Fractions (X) at Locations I 1	2	3	4	5	6	7	8	9	10	11	12	13
COMMENCE VALVE OPENING																			
0.0	20.9	20.9	137.5	4.4	0.0000	0.000	0.000	0.000	0.000	0.000	0.000	0.000	0.000	0.000	0.000	0.000	0.000	0.000	
1.0	21.9	22.0	21.6	-408.3	12.7914	.031	1.386	-1.283	1.386	1.386	1.386	1.386	-.216	-1.550	-.482	-.482	-1.016	-1.016	-.482
VALVE FULLY OPEN																			
2.0	23.7	24.0	19.4	71.2	2.5541	.065	.017	.017	.017	.233	.233	.233	-.005	-.026	.060	-.005	.038	-.005	.038
3.0	25.1	25.9	18.0	34.9	1.1417	.095	.059	.059	.059	.186	.186	.122	.059	.046	.110	.097	.084	.072	.097
4.0	26.2	27.4	18.0	28.8	.8626	.122	.154	.047	.154	.154	.154	.154	.079	.100	.111	.100	.143	.111	.122
5.0	27.0	28.5	18.4	28.3	.8485	.148	.152	.103	.103	.202	.152	.152	.123	.142	.162	.142	.172	.172	.142
6.0	27.6	29.4	18.8	24.5	.6412	.170	.142	.142	.142	.235	.142	.142	.151	.170	.198	.188	.179	.188	.188
7.0	28.0	30.1	19.3	26.3	.7099	.192	.200	.108	.200	.200	.200	.200	.163	.191	.191	.237	.191	.210	.200
8.0	28.2	30.5	19.8	27.3	.6918	.212	.239	.146	.146	.239	.239	.239	.174	.211	.221	.249	.221	.221	.211
9.0	28.4	30.9	20.3	27.1	.8700	.237	.187	.187	.187	.281	.281	.281	.206	.243	.225	.262	.262	.243	.234
10.0	28.5	31.1	20.7	27.0	.6349	.255	.213	.213	.213	.309	.261	.261	.222	.270	.251	.289	.299	.261	.251
11.0	28.8	31.6	21.1	23.2	.5176	.271	.257	.161	.257	.257	.257	.257	.276	.304	.276	.304	.323	.304	.295
12.0	28.8	31.8	21.4	26.3	.5608	.287	.273	.177	.273	.321	.273	.273	.264	.312	.292	.302	.331	.321	.312
13.0	28.8	31.9	21.7	25.8	.5375	.301	.291	.194	.194	.291	.291	.291	.311	.340	.340	.340	.350	.350	.331
14.0	28.6	31.7	21.8	30.5	.6319	.316	.280	.178	.280	.381	.381	.280	.300	.330	.341	.341	.341	.341	.330
15.0	28.7	31.9	22.1	24.8	.4742	.329	.303	.252	.303	.354	.303	.303	.324	.344	.354	.354	.365	.365	.344
16.0	28.7	32.0	22.3	25.8	.4745	.341	.319	.215	.319	.319	.319	.319	.349	.370	.391	.380	.380	.391	.360
17.0	28.5	31.7	22.4	31.3	.5948	.353	.302	.302	.302	.409	.409	.356	.334	.356	.366	.366	.366	.366	.356
18.0	28.3	31.6	22.6	30.5	.5404	.365	.405	.294	.294	.405	.405	.405	.316	.360	.360	.405	.360	.371	.360
19.0	28.4	31.7	22.8	25.6	.4095	.375	.313	.313	.313	.424	.424	.424	.358	.380	.369	.391	.402	.380	.380
20.0	28.3	31.8	22.9	27.8	.4661	.385	.375	.319	.319	.432	.432	.375	.353	.398	.387	.432	.387	.398	.398
21.0	28.3	31.7	23.0	29.2	.4698	.395	.433	.318	.318	.433	.433	.433	.352	.398	.387	.410	.421	.398	.398
22.0	28.2	31.6	23.1	29.5	.4653	.404	.434	.316	.316	.434	.434	.434	.399	.399	.422	.446	.411	.411	.399
23.0	28.2	31.7	23.3	27.6	.4048	.413	.445	.326	.326	.445	.445	.445	.385	.421	.409	.457	.433	.421	.409
24.0	28.1	31.6	23.4	29.0	.5543	.424	.450	.328	.328	.450	.450	.450	.414	.414	.438	.463	.438	.450	.438
25.0	28.1	31.6	23.5	29.4	.4071	.432	.453	.328	.328	.453	.453	.453	.403	.478	.441	.478	.478	.441	.428
26.0	28.1	31.6	23.7	28.1	.3792	.440	.462	.336	.336	.462	.462	.462	.449	.437	.475	.475	.449	.462	.449
27.0	28.1	31.5	23.8	29.8	.3827	.447	.463	.334	.334	.463	.463	.463	.411	.488	.450	.514	.488	.476	.463
28.0	28.0	31.5	23.9	29.0	.3680	.454	.468	.337	.337	.468	.468	.468	.455	.481	.481	.494	.481	.494	.468
29.0	28.1	31.6	24.0	27.8	.3313	.460	.478	.346	.346	.478	.478	.478	.438	.504	.451	.504	.517	.491	.478
COMMENCE VALVE CLOSURE																			
30.0	28.1	31.6	24.1	28.5	.3370	.467	.484	.351	.351	.484	.484	.484	.471	.471	.484	.511	.497	.497	.497
31.0	28.0	31.5	24.1	11.0	.3512	.473	.485	.350	.350	.485	.485	.485	.458	.513	.472	.513	.540	.499	.513
VALVE FULLY CLOSED																			
32.0	27.9	31.4	24.1	8.2	.2615	.477	.477	.341	.341	.477	.477	.477	.491	.518	.518	.546	.505	.532	.505
33.0	27.9	31.4	24.1	0.0	0.0000	.477	.470	.334	.334	.470	.470	.470	.497	.525	.484	.552	.579	.511	.511
34.0	27.6	31.0	23.9	3.5	.1102	.477	.549	.338	.408	.549	.549	.478	.464	.478	.478	.478	.478	.478	.478
XXX																			

Table 29A — Scaling Run 51, Test Configuration 5: Two 1.52-cm Nozzles

t (s)	Press Tank P (atm)	T_t (K)	Chamber P (atm)	Chamber Absolute Temperatures (K) at Locations I: 1	2	3	4	5	6	7	8	9	10	11	12	13
-5	***	***	1.016	295.2	295.2	295.2	295.2	295.2	295.2	294.5	293.4	293.2	294.5	294.5	294.4	294.3
-4	***	***	1.017	295.2	295.2	295.2	295.2	295.2	295.2	294.5	293.4	293.2	294.4	294.6	294.4	294.2
-3	***	***	1.017	295.2	295.2	295.2	295.2	295.2	295.2	294.5	293.4	293.2	294.5	294.5	294.4	294.2
-2	***	***	1.016	295.2	295.2	295.2	295.2	295.2	295.2	294.6	293.3	293.2	294.5	294.4	294.4	294.2
-1	***	***	1.016	295.2	295.2	295.2	295.2	295.2	295.2	294.5	293.4	293.2	294.5	294.5	294.4	294.3
0	6.307	294.2	1.017	295.2	295.2	295.2	295.2	295.2	295.2	294.5	293.5	293.1	294.5	294.5	294.3	294.2
1	6.267	296.2	1.024	295.7	295.2	295.2	295.2	295.7	295.7	294.7	294.2	293.6	294.9	294.7	294.5	294.4
2	6.015	283.2	1.057	298.2	297.2	296.2	297.2	298.2	298.2	297.3	296.8	295.7	298.1	297.8	297.5	296.9
3	5.809	278.2	1.182	300.2	299.2	299.2	299.2	300.2	300.2	299.5	299.0	299.0	300.9	300.7	300.4	299.8
4	5.616	276.7	1.260	303.2	302.2	301.2	301.7	302.7	302.2	301.9	301.2	301.2	303.1	302.6	302.4	301.8
5	5.415	276.2	1.334	305.2	304.2	303.2	303.2	304.2	304.2	303.3	302.6	302.2	304.2	304.0	303.5	303.2
6	5.188	275.2	1.402	305.7	305.2	304.7	304.7	305.2	305.2	304.5	303.8	303.7	305.2	304.9	304.6	304.2
7	5.018	274.2	1.470	306.2	306.2	306.2	305.2	306.2	306.2	305.0	304.1	303.9	305.7	305.5	305.4	304.9
8	4.808	274.2	1.534	306.2	306.2	306.2	306.2	306.2	306.2	305.2	304.5	304.4	305.9	305.9	305.4	305.1
9	4.658	273.2	1.595	307.2	306.7	306.2	306.2	306.2	306.2	305.7	304.8	304.7	306.1	305.9	305.8	305.5
10	4.510	273.2	1.654	307.2	307.2	307.2	306.2	307.2	306.2	305.9	304.8	304.8	306.2	305.9	305.9	305.7
11	4.363	272.7	1.711	307.2	307.2	307.2	307.2	307.2	306.2	305.9	304.8	304.8	305.9	305.9	305.8	305.6
12	4.209	272.2	1.765	307.2	307.2	307.2	307.2	307.2	307.2	305.9	304.8	304.4	305.9	305.8	305.5	305.7
13	4.040	272.2	1.819	307.2	307.2	307.2	307.2	307.2	306.7	305.9	304.5	304.5	305.8	305.6	305.8	305.5
14	3.941	272.2	1.871	307.2	307.2	307.2	307.2	307.2	306.2	305.8	304.4	304.6	305.3	305.8	305.8	305.5
15	3.807	272.2	1.918	307.2	307.2	306.2	307.2	306.2	306.2	305.6	304.7	304.2	305.7	305.5	305.5	305.7
16	3.647	272.2	1.969	307.2	306.7	306.2	306.2	306.2	306.2	306.0	304.5	304.5	305.4	305.7	305.4	305.3
17	3.586	271.2	2.010	306.2	306.2	306.2	306.2	306.2	306.2	305.5	304.4	303.9	305.3	305.2	305.3	305.3
18	3.524	263.7	2.027	306.2	306.2	306.2	306.2	306.2	306.2	305.2	303.8	303.8	304.7	304.7	304.8	304.7
19	3.567	268.2	2.022	306.2	306.2	306.2	306.2	305.2	305.2	304.5	303.6	303.2	304.5	304.4	304.2	304.4
20	***	***	2.021	305.2	306.2	305.2	305.2	305.2	305.2	304.5	303.3	303.2	304.4	304.0	304.1	304.0
21	***	***	2.018	305.2	305.2	305.2	305.2	305.2	305.2	304.2	303.1	303.1	304.0	304.1	303.9	303.8
22	***	***	2.017	305.2	305.2	305.2	305.2	305.2	305.2	304.2	302.9	302.8	304.0	303.9	303.8	303.8
23	***	***	2.015	305.2	305.2	305.2	305.2	305.2	305.2	303.8	302.8	302.6	303.7	303.8	303.6	303.5
24	***	***	2.014	305.2	305.2	305.2	305.2	305.2	305.2	303.7	302.6	302.5	303.8	303.7	303.7	303.4
25	***	***	2.013	304.2	304.2	304.2	305.2	304.2	304.2	303.3	302.5	302.2	303.6	303.7	303.4	303.3
26	***	***	2.012	304.2	304.2	304.2	304.2	304.2	304.2	303.4	302.3	302.2	303.4	303.4	303.4	303.1
27	***	***	2.011	304.2	304.2	304.2	304.2	304.2	304.2	303.3	302.0	302.1	303.4	303.1	303.1	303.0
32	***	***	2.007	303.2	303.2	303.2	303.2	303.2	303.2	302.7	301.4	301.4	302.6	302.5	302.6	302.4
37	***	***	2.003	303.2	303.2	303.2	303.2	303.2	303.2	302.4	300.9	301.0	302.2	302.3	302.3	301.8
42	***	***	1.999	302.2	302.2	302.2	303.2	302.2	303.2	301.7	300.4	300.2	301.7	301.8	301.6	301.3
47	***	***	1.998	302.2	302.2	302.2	302.2	302.2	302.2	301.3	300.1	299.9	301.1	301.4	301.1	300.9
52	***	***	1.996	301.2	301.2	301.7	302.2	302.2	302.2	300.6	299.6	299.2	300.6	300.9	300.6	300.4
57	***	***	1.993	301.2	301.2	301.2	301.2	301.2	301.2	300.3	299.0	298.9	300.3	300.5	300.3	300.1
62	***	***	1.991	301.2	301.2	301.2	301.2	301.2	301.2	300.0	298.8	298.7	300.0	300.2	300.0	299.8
67	***	***	1.988	300.2	300.2	301.2	301.2	301.2	301.2	299.7	298.6	298.4	299.8	299.7	299.5	299.5
72	***	***	1.987	300.2	300.2	300.2	301.2	300.2	301.2	299.5	298.3	298.2	299.5	299.5	299.5	299.3
77	***	***	1.985	300.2	300.2	300.2	300.2	300.2	300.2	299.2	298.2	297.9	299.4	299.3	299.1	299.0
87	***	***	1.983	300.2	300.2	300.2	300.2	300.2	300.2	298.9	297.9	297.7	298.9	298.9	298.8	298.7
97	***	***	1.980	299.2	299.2	299.2	300.2	300.2	300.2	298.5	297.5	297.3	298.4	298.7	298.5	298.3
107	***	***	1.978	299.2	299.2	299.2	299.2	299.2	299.2	298.3	297.3	297.0	298.3	298.3	298.1	298.0
117	***	***	1.976	299.2	299.2	299.2	299.2	299.2	299.2	298.0	296.9	296.8	298.0	298.0	297.8	297.8
127	***	***	1.974	299.2	298.2	298.2	299.2	299.2	299.2	297.7	296.8	296.4	297.8	297.8	297.5	297.5
137	***	***	1.973	298.2	298.2	298.2	298.2	298.2	298.2	297.6	296.5	296.5	297.4	297.6	297.4	297.4
147	***	***	1.972	298.2	298.2	298.2	298.2	298.2	298.2	297.4	296.5	296.3	297.3	297.5	297.3	297.2

COORDINATES

I	R (M)	THETA (DEG)	Z (M)
1	0.457	45	-0.152
2	0.457	45	-0.076
3	0.457	45	0.0
4	0.457	45	0.076
5	0.457	45	0.152
6	0.457	45	0.229
7	0.457	45	0.530
8	0.457	45	0.610
9	0.457	45	0.687
10	0.457	45	0.762
11	0.457	45	0.838
12	0.457	45	0.914
13	0.457	45	0.991

Table 29B — Inferred Pressurant Distribution, Scaling Run 51, Test Configuration 5: Two 1.52-cm Nozzles

t (s)	$\bar{T}$ (°C)	$\bar{T}_s$ (°C)	$\bar{T}_p$ (°C)	β	β/θ	$\bar{X}$	Pressurant Fractions (X) at Locations I 1	2	3	4	5	6	7	8	9	10	11	12	13
COMMENCE VALVE OPENING																			
0.0	21.4	21.4	142.0	.8	0.0000	0.000	0.000	0.000	0.000	0.000	0.000	0.000	0.000	0.000	0.000	0.000	0.000	0.000	
1.0	21.7	21.7	22.0	1066.1	6.2002	.006	.660	-1.041	-1.041	-1.041	.660	.660	-.361	1.341	.660	.320	-.361	-.020	-.361
VALVE FULLY OPEN																			
2.0	24.1	24.3	21.4	114.4	6.9392	.064	-.027	.312	.651	.312	-.027	-.027	.041	-.128	.109	-.230	-.128	-.095	.075
3.0	26.6	27.6	19.6	35.9	2.3829	.124	.150	.276	.276	.276	.150	.150	.150	.075	.038	-.025	.000	.013	.080
4.0	28.9	30.8	19.7	18.3	1.0303	.172	.128	.218	.308	.263	.173	.218	.182	.155	.119	.074	.119	.119	.164
5.0	30.4	33.2	20.3	16.5	.8565	.214	.140	.218	.295	.295	.218	.218	.233	.210	.210	.163	.171	.195	.218
6.0	31.5	35.0	21.0	15.1	.6984	.250	.224	.260	.295	.295	.260	.260	.260	.238	.217	.210	.231	.238	.260
7.0	32.2	36.4	21.7	15.2	.6869	.283	.272	.272	.272	.340	.272	.272	.306	.299	.285	.258	.272	.265	.292
8.0	32.5	37.1	22.2	16.7	.6980	.312	.316	.316	.316	.316	.316	.316	.336	.316	.296	.289	.289	.310	.323
9.0	32.7	37.8	22.8	15.6	.5960	.338	.294	.327	.360	.360	.360	.360	.347	.340	.320	.320	.334	.327	.340
10.0	33.0	38.3	23.2	15.2	.5383	.361	.334	.334	.334	.399	.334	.399	.373	.380	.353	.353	.373	.360	.367
11.0	33.0	38.8	23.7	16.1	.5438	.382	.357	.357	.357	.357	.357	.423	.397	.403	.377	.397	.397	.390	.397
12.0	33.0	39.1	24.0	16.0	.4939	.401	.378	.378	.378	.378	.378	.378	.417	.424	.424	.417	.424	.431	.411
13.0	33.0	39.2	24.3	16.6	.5043	.419	.391	.391	.391	.391	.391	.424	.431	.458	.431	.437	.451	.424	.437
14.0	32.9	39.3	24.6	16.8	.4761	.435	.402	.402	.402	.402	.402	.470	.449	.476	.436	.483	.449	.436	.449
15.0	32.7	39.2	24.8	18.0	.4539	.445	.403	.403	.472	.403	.472	.472	.465	.458	.465	.458	.472	.458	.438
COMMENCE VALVE CLOSURE																			
16.0	32.6	39.1	25.0	17.7	.4719	.464	.408	.443	.479	.479	.479	.479	.443	.479	.450	.486	.464	.471	.471
17.0	32.3	38.9	25.1	72.2	.4209	.475	.471	.471	.471	.471	.471	.471	.471	.479	.486	.486	.493	.471	.464
VALVE FULLY CLOSED																			
18.0	32.1	38.6	25.0	35.4	.2062	.480	.457	.457	.457	.457	.457	.457	.479	.509	.479	.516	.516	.502	.494
19.0	31.3	37.5	24.7	31.3	.1825	.480	.427	.427	.427	.427	.505	.505	.505	.497	.497	.505	.513	.513	.490
20.0	31.2	37.3	24.6	6.5	.0382	.480	.480	.401	.480	.480	.480	.480	.480	.496	.472	.488	.519	.496	.488
21.0	30.7	36.6	24.4	20.3	.1181	.480	.465	.465	.465	.465	.465	.465	.489	.498	.465	.506	.498	.498	.498
22.0	30.6	36.4	24.3	7.0	.0406	.480	.459	.459	.459	.459	.459	.459	.484	.509	.484	.500	.509	.500	.500
23.0	30.3	36.0	24.1	14.3	.0834	.480	.449	.449	.449	.449	.449	.449	.508	.508	.491	.516	.508	.508	.508
24.0	30.1	35.8	24.0	7.3	.0427	.480	.446	.446	.446	.446	.446	.446	.514	.523	.497	.506	.514	.497	.514
25.0	30.0	35.5	24.0	7.5	.0435	.480	.489	.489	.489	.403	.489	.489	.507	.489	.481	.481	.472	.481	.481
26.0	29.8	35.3	23.9	7.6	.0442	.480	.477	.477	.477	.477	.477	.477	.485	.503	.468	.485	.485	.468	.485
27.0	29.7	35.1	23.8	7.7	.0451	.480	.469	.469	.469	.469	.469	.469	.487	.514	.469	.478	.505	.487	.487
28.0	29.7	35.1	23.8	0.0	0.0000	.480	.465	.465	.465	.465	.465	.465	.501	.501	.483	.501	.492	.483	.492
29.0	29.4	34.6	23.7	15.9	.0926	.480	.460	.460	.460	.460	.460	.460	.496	.533	.478	.496	.514	.478	.487
30.0	29.2	34.4	23.6	8.2	.0476	.480	.448	.448	.448	.448	.448	.448	.522	.522	.522	.504	.494	.485	.504
31.0	29.2	34.4	23.6	0.0	0.0000	.480	.438	.484	.484	.438	.438	.438	.494	.512	.503	.521	.484	.494	.512
32.0	29.1	34.2	23.5	8.3	.0486	.480	.488	.488	.488	.488	.488	.488	.469	.497	.460	.479	.479	.460	.469
33.0	28.9	34.0	23.5	8.5	.0495	.480	.479	.479	.479	.479	.479	.479	.489	.498	.489	.470	.460	.470	.489
34.0	28.9	34.0	23.5	0.0	0.0000	.480	.480	.480	.480	.480	.480	.480	.471	.509	.471	.490	.471	.461	.490

Table 30A — Scaling Run 52, Test Configuration 5: Two 1.52-cm Nozzles

t (s)	Press Tank P (atm)	T_t (K)	Chamber P (atm)	Chamber Absolute Temperatures (K) at Locations I												
				1	2	3	4	5	6	7	8	9	10	11	12	13
-5	***	***	1.017	297.2	297.2	297.2	297.2	297.2	297.2	296.7	295.3	295.1	296.5	296.7	296.5	296.4
-4	***	***	1.017	297.2	297.2	297.2	297.2	297.2	297.2	296.6	295.3	295.0	296.7	296.5	296.4	296.4
-3	***	***	1.017	297.2	297.2	297.2	297.2	297.2	297.2	296.7	295.4	295.0	296.4	296.7	296.4	296.3
-2	***	***	1.016	297.2	297.2	297.2	297.2	297.2	297.2	296.7	295.2	295.0	296.7	296.5	296.5	296.4
-1	***	***	1.017	297.2	297.2	297.2	297.2	297.2	297.2	296.5	295.4	295.0	296.6	296.7	296.4	296.3
0	6.293	297.2	1.018	297.7	297.2	297.2	297.2	297.2	297.7	296.7	295.4	295.2	296.7	296.5	296.5	296.4
1	6.070	307.2	1.075	299.2	299.2	298.2	298.2	299.2	299.2	298.6	298.2	298.2	300.5	298.7	299.9	297.7
2	5.845	281.2	1.162	301.2	300.2	300.2	300.2	301.2	301.2	301.7	301.4	300.4	302.4	302.0	301.7	301.2
3	5.643	279.7	1.243	304.7	303.2	302.7	303.2	304.2	303.7	303.7	302.7	302.4	304.7	304.4	304.3	303.7
4	5.432	278.2	1.318	306.2	305.2	305.2	305.2	306.2	305.2	305.0	304.4	303.9	306.2	306.0	305.8	305.2
5	5.248	277.7	1.389	307.2	306.7	306.7	306.7	307.2	306.7	306.2	305.2	304.5	306.8	306.8	306.5	306.1
6	5.044	276.2	1.456	308.2	307.2	307.2	307.2	308.2	307.2	306.8	306.0	305.6	307.5	307.2	306.9	306.5
7	4.836	275.7	1.520	308.2	308.2	308.2	308.2	308.2	308.2	307.6	306.3	306.3	307.5	307.6	307.4	306.9
8	4.695	275.2	1.582	309.2	308.2	308.2	308.2	308.2	308.2	307.6	306.4	306.2	307.9	307.6	307.5	307.3
9	4.563	274.2	1.642	309.2	309.2	308.2	309.2	309.2	308.2	307.6	306.7	306.1	307.8	307.8	307.3	307.3
10	4.347	274.2	1.699	309.2	309.2	308.7	309.2	309.2	309.2	307.8	306.4	306.6	307.8	307.6	307.5	307.5
11	4.183	274.2	1.773	309.2	309.2	309.2	309.2	309.2	309.2	307.6	306.5	306.0	307.7	307.5	307.4	307.2
12	4.011	273.7	1.826	309.2	309.2	309.2	309.2	309.2	309.2	307.6	306.3	306.3	307.5	307.3	307.5	307.3
13	3.916	273.2	1.876	309.2	309.2	309.2	309.2	309.2	309.2	307.5	306.3	305.9	307.4	307.3	307.1	307.0
14	3.742	273.2	1.926	309.2	309.2	309.2	309.2	309.2	309.2	307.5	305.9	306.0	307.5	307.0	307.1	306.8
15	3.670	273.2	1.972	309.2	308.7	308.7	308.7	308.2	308.2	307.5	306.0	305.8	307.2	307.2	306.9	306.7
16	3.518	273.2	2.018	308.2	308.2	308.2	308.2	308.2	308.2	307.3	305.7	305.8	306.5	306.9	307.0	306.7
17	3.352	268.7	2.026	308.2	308.2	308.2	308.2	308.2	308.2	306.8	305.5	305.0	306.5	306.3	306.3	306.1
18	3.313	270.2	2.022	308.2	307.2	308.2	308.2	307.2	307.2	306.6	305.0	305.0	305.9	306.0	306.1	305.8
19	***	***	2.019	307.2	307.2	307.2	307.2	307.2	307.2	306.2	304.9	304.5	306.0	305.8	305.7	305.5
20	***	***	2.017	307.2	307.2	307.2	307.2	307.2	307.2	306.1	304.4	304.7	305.8	305.5	305.4	305.2
21	***	***	2.015	307.2	307.2	307.2	307.2	307.2	307.2	305.7	304.5	304.4	305.4	305.5	305.1	304.9
22	***	***	2.013	307.2	307.2	307.2	307.2	306.7	307.2	305.6	304.2	304.0	305.4	305.1	305.1	305.0
23	***	***	2.013	306.2	306.2	306.2	307.2	306.2	306.2	305.4	304.0	304.0	305.1	305.0	305.0	304.8
24	***	***	2.011	306.2	306.2	306.2	306.7	306.2	306.2	305.0	303.9	303.7	304.8	305.0	304.6	304.5
25	***	***	2.010	306.2	306.2	306.2	306.2	306.2	306.2	304.9	303.9	303.5	305.0	304.9	304.5	304.5
26	***	***	2.010	306.2	306.2	306.2	306.2	306.2	306.2	304.8	303.5	303.4	304.9	304.6	304.7	304.5
31	***	***	2.004	305.2	305.2	305.2	306.2	305.2	305.2	304.3	303.3	302.9	304.3	304.3	303.9	303.8
36	***	***	2.002	305.2	305.2	305.2	305.2	305.2	305.2	304.0	302.6	302.3	303.8	303.5	303.6	303.5
41	***	***	1.998	304.2	304.2	304.2	305.2	304.2	304.2	303.5	302.3	301.9	303.2	303.3	303.2	303.1
46	***	***	1.996	304.2	304.2	304.2	304.2	304.2	304.2	303.1	301.8	301.5	302.5	302.9	302.8	302.6
51	***	***	1.994	303.2	303.2	303.2	304.2	303.2	304.2	302.6	301.3	300.8	302.1	302.4	302.4	302.2
56	***	***	1.991	303.2	303.2	303.2	303.2	303.2	303.2	302.2	300.9	300.5	301.7	302.0	302.0	301.9
61	***	***	1.988	303.2	302.7	303.2	303.2	303.2	303.2	301.7	300.4	300.2	301.7	301.6	301.6	301.5
66	***	***	1.987	302.2	302.2	302.2	303.2	302.2	303.2	301.5	300.2	300.0	301.5	301.3	301.4	301.3
71	***	***	1.985	302.2	302.2	302.2	302.2	302.2	302.2	301.3	300.0	299.8	301.2	301.3	301.3	301.0
76	***	***	1.984	302.2	302.2	302.2	302.2	302.2	302.2	301.2	299.9	299.7	300.9	300.9	301.1	300.9
86	***	***	1.981	302.2	301.2	301.2	302.2	302.2	302.2	300.6	299.6	299.1	300.4	300.8	300.6	300.4
96	***	***	1.979	301.2	301.2	301.2	301.2	301.2	301.2	300.3	299.2	299.0	300.3	300.4	300.2	300.0
106	***	***	1.977	301.2	301.2	301.2	301.2	301.2	301.2	300.0	299.0	298.7	300.1	300.0	299.9	299.8
116	***	***	1.974	301.2	301.2	300.2	301.2	301.2	301.2	299.5	298.8	298.3	299.8	299.9	299.5	299.5
126	***	***	1.973	300.2	300.2	300.2	300.2	300.2	300.2	299.5	298.6	298.1	299.5	299.6	299.3	299.1
136	***	***	1.971	300.2	300.2	300.2	300.2	300.2	300.2	299.5	298.1	298.1	299.5	299.2	299.3	299.1
146	***	***	1.970	300.2	300.2	300.2	300.2	300.2	300.2	299.3	298.0	298.0	299.1	299.2	299.0	298.9
156	***	***	1.969	300.2	300.2	300.2	300.2	300.2	300.2	299.1	298.0	297.8	299.1	299.0	298.9	298.8

COORDINATES

I	R (M)	THETA (DEG)	Z (M)
1	0.457	45	-0.152
2	0.457	45	-0.076
3	0.457	45	0.0
4	0.457	45	0.076
5	0.457	45	0.152
6	0.457	45	0.229
7	0.457	45	0.530
8	0.457	45	0.610
9	0.457	45	0.687
10	0.457	45	0.762
11	0.457	45	0.838
12	0.457	45	0.914
13	0.457	45	0.991

Table 30B — Inferred Pressurant Distribution, Scaling Run 52, Test Configuration 5: Two 1.52-cm Nozzles

t (s)	$\bar{T}$ (°C)	$\bar{T}_s$ (°C)	$\bar{T}_b$ (°C)	β	β/θ	$\bar{X}$	Pressurant Fractions (X) at Locations I 1	2	3	4	5	6	7	8	9	10	11	12	13
COMMENCE VALVE OPENING																			
0.0	23.5	23.5	55.1	4.6	0.0000	0.000	0.000	0.000	0.000	0.000	0.000	0.000	0.000	0.000	0.000	0.000	0.000	0.000	
1.0	25.6	25.5	29.0	191.7	9.0868	.046	-.126	.016	-.269	-.269	.016	-.126	-.013	.243	.300	.528	.073	.414	-.183
VALVE FULLY OPEN																			
2.0	28.0	28.2	26.3	60.5	4.2429	.111	.592	.855	.855	.855	.329	.592	-.196	-.722	-.302	-.564	-.459	-.302	-.091
3.0	30.5	31.7	23.9	21.1	1.2446	.162	.152	.279	.343	.279	.152	.279	.152	.114	.127	.025	.038	.050	.114
4.0	32.2	34.4	23.6	17.3	.9193	.205	.217	.263	.263	.263	.170	.310	.235	.170	.198	.123	.123	.142	.189
5.0	33.2	36.2	23.9	16.9	.8299	.243	.257	.257	.257	.257	.216	.298	.257	.233	.273	.208	.192	.216	.241
6.0	33.9	37.5	24.3	16.7	.7502	.277	.263	.300	.300	.300	.225	.338	.293	.255	.270	.240	.247	.270	.293
7.0	34.4	38.7	24.7	15.5	.6402	.306	.332	.296	.296	.296	.296	.332	.303	.303	.289	.310	.289	.303	.332
8.0	34.5	39.3	25.0	17.0	.6706	.333	.298	.333	.333	.333	.333	.368	.340	.333	.333	.319	.326	.333	.340
9.0	34.8	40.0	25.4	15.8	.5746	.357	.339	.305	.373	.305	.305	.408	.380	.353	.380	.367	.353	.387	.380
10.0	34.9	40.5	25.8	15.7	.5265	.378	.372	.338	.372	.338	.338	.372	.399	.405	.378	.399	.399	.405	.399
11.0	34.9	40.8	26.2	17.0	.7265	.404	.393	.359	.359	.359	.359	.393	.434	.421	.441	.428	.428	.434	.441
12.0	34.9	41.0	26.5	16.7	.4919	.421	.410	.376	.376	.376	.376	.410	.451	.451	.438	.458	.458	.445	.451
13.0	34.8	41.0	26.7	17.4	.4750	.437	.419	.384	.384	.384	.384	.419	.467	.460	.474	.474	.467	.481	.481
14.0	34.6	40.9	26.9	18.5	.4985	.452	.418	.383	.454	.383	.383	.490	.468	.490	.468	.468	.490	.482	.497
COMMENCE VALVE CLOSURE																			
15.0	34.4	40.8	27.0	18.5	.4465	.465	.420	.420	.420	.420	.456	.492	.470	.485	.485	.492	.478	.499	.507
16.0	34.1	40.5	27.2	9.9	.4804	.478	.486	.448	.448	.448	.448	.486	.478	.501	.478	.508	.493	.486	.501
VALVE FULLY CLOSED																			
17.0	33.9	40.2	27.0	3.1	.1521	.480	.467	.428	.428	.428	.428	.467	.497	.497	.512	.520	.520	.520	.528
18.0	33.3	39.3	26.7	3.1	.1513	.480	.434	.474	.394	.394	.474	.514	.482	.506	.490	.538	.514	.506	.522
19.0	32.8	38.6	26.5	2.5	.1198	.480	.485	.444	.444	.444	.444	.485	.485	.485	.493	.502	.502	.510	.518
20.0	32.5	38.2	26.3	1.7	.0832	.480	.475	.433	.433	.433	.433	.475	.483	.517	.475	.509	.517	.526	.534
21.0	32.2	37.7	26.2	1.8	.0861	.480	.464	.421	.421	.421	.421	.464	.507	.499	.490	.533	.507	[illegible]	.531
22.0	31.9	37.3	26.0	1.8	.0891	.480	.493	.408	.408	.408	.453	.453	.506	.515	.515	.524	.533	.533	.533
23.0	31.9	37.3	26.0	0.0	0.0000	.480	.504	.460	.460	.371	.460	.504	.486	.495	.468	.513	.495	.504	.522
24.0	31.6	36.8	25.9	1.9	.0924	.480	.488	.442	.442	.396	.442	.488	.506	.488	.488	.524	.488	.524	.524
25.0	31.4	36.6	25.8	1.0	.0475	.480	.484	.437	.437	.437	.437	.484	.511	.484	.502	.502	.493	.521	.511
26.0	31.4	36.6	25.8	0.0	0.0000	.480	.476	.430	.430	.430	.430	.476	.514	.514	.504	.504	.514	.504	.514
27.0	31.3	36.4	25.7	1.0	.0485	.480	.471	.424	.424	.424	.424	.471	.528	.518	.481	.528	.509	.509	.528
28.0	31.0	36.0	25.6	2.1	.0998	.480	.466	.418	.418	.418	.418	.466	.534	.495	.505	.534	.495	.534	.543
29.0	30.8	35.7	25.5	1.1	.0514	.480	.455	.455	.406	.406	.406	.455	.524	.504	.514	.514	.514	.543	.543
30.0	30.8	35.7	25.5	0.0	0.0000	.480	.522	.473	.473	.375	.375	.522	.493	.503	.483	.503	.493	.512	.512
31.0	30.5	35.3	25.4	2.2	.1061	.480	.510	.459	.459	.358	.459	.510	.499	.479	.489	.499	.479	.520	.520
32.0	30.7	35.5	25.5	-1.1	-.0536	.480	.498	.449	.449	.449	.449	.498	.479	.479	.488	.498	.498	.498	.508
33.0	30.4	35.0	25.3	2.2	.1065	.480	.493	.441	.441	.441	.441	.493	.503	.472	.493	.513	.482	.513	.513
34.0	30.4	35.0	25.3	0.0	0.0000	.480	.486	.435	.435	.435	.435	.486	.486	.507	.486	.517	.507	.507	.517

Table 31A — Scaling Run 53, Test Configuration 5: Two 1.52-cm Nozzles

t (s)	Press Tank P (atm)	T_t (K)	Chamber P (atm)	Chamber Absolute Temperatures (K) at Locations I												
				1	2	3	4	5	6	7	8	9	10	11	12	13
-5	***	***	1.018	297.2	297.2	297.2	297.2	297.2	297.7	296.4	295.4	294.9	296.5	296.6	296.3	296.2
-4	***	***	1.016	297.2	297.2	297.2	297.2	297.2	297.2	296.7	295.2	295.0	296.6	296.4	296.4	296.2
-3	***	***	1.018	297.2	297.2	297.2	297.2	297.2	297.2	296.4	295.4	294.8	296.6	296.6	296.3	296.2
-2	***	***	1.016	297.2	297.2	297.2	297.2	297.2	297.7	296.7	295.3	295.0	296.5	296.5	296.5	296.2
-1	***	***	1.017	297.2	297.2	297.2	297.2	297.2	297.2	296.4	295.5	294.8	296.6	296.7	296.2	296.2
0	6.276	297.2	1.019	297.7	297.2	297.2	297.2	297.2	297.7	296.7	295.5	295.3	296.7	296.5	296.5	296.3
1	6.063	295.2	1.082	300.2	299.2	298.2	299.2	300.2	300.2	298.8	298.4	297.7	299.7	299.5	298.5	298.1
2	5.815	279.2	1.170	303.2	302.2	301.2	302.2	302.2	302.7	301.0	301.0	300.4	302.7	302.5	301.9	301.2
3	5.633	278.2	1.249	305.2	304.2	304.2	304.2	305.2	305.2	303.5	302.7	302.4	304.9	304.4	303.9	303.3
4	5.406	277.2	1.325	306.2	305.2	305.2	305.2	306.2	306.2	305.0	304.4	303.8	305.9	305.8	305.4	304.9
5	5.223	276.7	1.395	307.2	306.7	306.2	306.7	307.2	306.7	306.0	305.6	304.8	307.0	306.6	306.2	305.7
6	5.036	276.2	1.461	308.2	307.2	307.2	307.2	308.2	308.2	306.7	306.0	305.7	307.5	307.2	306.8	306.7
7	4.818	275.2	1.525	308.7	308.2	308.2	308.2	308.2	308.2	307.3	306.2	306.2	307.7	307.6	307.3	306.8
8	4.681	274.2	1.588	309.2	308.2	308.2	308.2	308.2	308.2	307.5	306.5	306.2	308.0	307.6	307.3	307.0
9	4.484	274.2	1.665	309.2	309.2	308.2	308.2	309.2	308.2	307.6	306.5	306.4	308.0	307.7	307.5	307.2
10	4.299	273.2	1.722	309.2	309.2	309.2	309.2	309.2	309.2	307.8	306.6	306.3	308.0	307.6	307.5	307.1
11	4.168	273.2	1.777	309.2	309.2	309.2	309.2	309.2	309.2	307.6	306.6	306.1	307.8	307.6	307.5	307.1
12	4.000	273.2	1.830	309.2	309.2	309.2	309.2	309.2	309.2	307.8	306.4	306.4	307.9	307.3	307.2	307.1
13	3.904	273.2	1.881	309.2	309.2	309.2	309.2	309.2	309.2	307.5	306.4	306.1	307.2	307.4	307.2	307.0
14	3.759	273.2	1.929	309.2	309.2	309.2	309.2	308.2	308.2	307.5	306.2	305.9	307.5	307.0	307.1	307.0
15	3.652	273.2	1.977	309.2	308.7	308.2	308.7	308.2	308.2	307.2	306.2	306.0	307.2	307.3	307.0	306.8
16	3.518	273.2	2.022	309.2	308.2	308.2	308.2	308.2	308.2	307.1	305.8	305.8	307.1	306.4	306.9	306.9
17	3.548	266.7	2.025	308.2	308.2	308.2	308.2	308.2	308.2	306.7	305.7	305.3	306.5	306.5	306.1	306.0
18	3.531	271.2	2.021	308.2	307.2	307.2	308.2	307.2	307.2	306.6	305.0	304.9	306.6	306.1	306.1	305.8
19	***	***	2.019	307.2	307.2	307.2	307.2	307.2	307.2	306.0	304.9	305.0	306.0	306.0	305.8	305.5
20	***	***	2.016	307.2	307.2	307.2	307.2	307.2	307.2	305.7	304.9	304.5	305.9	305.9	305.5	305.5
21	***	***	2.015	307.2	307.2	307.2	307.2	307.2	307.2	305.8	304.5	304.5	305.7	305.4	305.4	305.4
22	***	***	2.014	307.2	307.2	307.2	307.2	306.7	306.7	305.3	304.4	304.2	305.2	305.5	305.2	305.0
23	***	***	2.012	306.2	306.2	306.2	306.2	306.2	306.2	305.3	304.4	303.8	305.3	305.1	304.9	304.9
24	***	***	2.012	306.2	306.2	306.2	306.2	306.2	306.2	305.3	303.9	303.9	305.2	304.8	304.9	304.8
25	***	***	2.010	306.2	306.2	306.2	306.2	306.2	306.2	305.0	303.8	303.9	304.8	305.0	304.7	304.5
26	***	***	2.009	306.2	306.2	306.2	306.2	306.2	306.2	304.8	303.9	303.5	304.8	304.9	304.5	304.5
31	***	***	2.065	305.2	305.2	305.2	305.2	305.2	305.2	304.3	303.1	303.0	304.2	304.1	304.0	303.8
36	***	***	2.001	305.2	305.2	305.2	305.2	305.2	305.2	303.6	302.4	302.6	303.5	303.9	303.7	303.4
41	***	***	1.998	304.2	304.2	304.2	304.2	304.2	304.2	303.1	302.0	301.8	303.2	303.3	303.3	303.1
46	***	***	1.995	304.2	303.2	304.2	304.2	304.2	304.2	302.5	301.4	301.2	302.8	303.0	302.7	302.5
51	***	***	1.992	303.2	303.2	303.2	303.2	303.2	304.2	302.2	301.2	300.8	302.4	302.6	302.4	302.3
56	***	***	1.991	303.2	303.2	303.2	303.2	303.2	303.2	302.0	300.9	300.5	301.8	302.2	302.2	301.9
61	***	***	1.989	302.2	302.2	303.2	303.2	303.2	303.2	301.5	300.7	300.1	301.6	301.9	301.7	301.5
66	***	***	1.987	302.2	302.2	302.2	303.2	302.2	303.2	301.4	300.3	300.0	301.5	301.4	301.4	301.3
71	***	***	1.985	302.2	302.2	302.2	302.2	302.2	302.2	301.0	300.1	299.8	301.2	301.2	301.1	301.0
76	***	***	1.984	302.2	302.2	302.2	302.2	302.2	302.2	300.8	300.0	299.5	300.9	301.0	300.9	300.6
86	***	***	1.982	302.2	301.2	302.2	302.2	302.2	302.2	300.6	299.5	299.3	300.5	300.5	300.5	300.3
96	***	***	1.979	301.2	301.2	301.2	301.2	301.2	302.2	300.3	299.3	298.9	300.3	300.3	300.2	299.9
106	***	***	1.977	301.2	301.2	301.2	301.2	301.2	301.2	300.0	298.9	298.7	300.0	300.0	299.9	299.7
116	***	***	1.975	301.2	300.2	301.2	301.2	301.2	301.2	299.8	298.8	298.5	299.8	299.6	299.7	299.5
126	***	***	1.973	300.2	300.2	300.2	300.2	300.7	301.2	299.4	298.6	298.1	299.5	299.5	299.4	299.3
136	***	***	1.971	300.2	300.2	300.2	300.2	300.2	300.2	299.4	298.2	298.1	299.5	299.2	299.3	299.1
146	***	***	1.970	300.2	300.2	300.2	300.2	300.2	300.2	299.1	298.2	298.0	299.2	299.2	299.0	298.8
156	***	***	1.969	300.2	300.2	300.2	300.2	300.2	300.2	299.0	298.0	297.9	299.0	299.0	298.9	298.8

I	COORDINATES R (M)	THETA (DEG)	Z (M)
1	0.457	45	-0.152
2	0.457	45	-0.076
3	0.457	45	0.0
4	0.457	45	0.076
5	0.457	45	0.152
6	0.457	45	0.229
7	0.457	45	0.530
8	0.457	45	0.610
9	0.457	45	0.687
10	0.457	45	0.762
11	0.457	45	0.838
12	0.457	45	0.914
13	0.457	45	0.991

Table 31B — Inferred Pressurant Distribution, Scaling Run 53, Test Configuration 5: Two 1.52-cm Nozzles

t (s)	$\bar{T}$ (°C)	$\bar{T}_s$ (°C)	$\bar{T}_p$ (°C)	β	β/θ	$\bar{X}$	Pressurant Fractions (X) at Locations I 1	2	3	4	5	6	7	8	9	10	11	12	13
CONMENCE VALVE OPENING																			
0.0	23.5	23.5	77.4	4.1	0.0000	0.000	0.000	0.000	0.000	0.000	0.000	0.000	0.000	0.000	0.000	0.000	0.000	0.000	
1.0	25.9	25.9	24.9	155.5	8.1142	.051	-.131	.384	1.414	.384	-.647	-.131	.281	-.544	-.028	-.647	-.543	.384	.487
VALVE FULLY OPEN																			
2.0	28.7	29.4	23.3	40.8	2.8078	.114	.053	.136	.302	.136	.136	.136	.252	.053	.119	-.030	-.014	.069	.136
3.0	30.9	32.6	22.1	19.6	1.1345	.164	.150	.197	.197	.197	.103	.150	.216	.178	.188	.084	.122	.160	.188
4.0	32.1	34.7	22.3	19.3	1.0611	.209	.216	.256	.256	.256	.176	.216	.232	.184	.216	.160	.160	.184	.200
5.0	33.2	36.5	22.9	16.7	.9042	.246	.254	.254	.291	.254	.217	.291	.268	.210	.254	.195	.217	.239	.254
6.0	33.9	37.9	23.5	15.6	.6802	.278	.271	.305	.305	.305	.236	.271	.305	.271	.278	.250	.264	.285	.271
7.0	34.4	39.0	24.1	15.9	.6567	.307	.298	.298	.298	.298	.298	.331	.324	.318	.304	.298	.298	.311	.324
8.0	34.5	39.5	24.6	17.0	.6803	.335	.299	.333	.333	.333	.333	.366	.346	.333	.339	.312	.333	.346	.346
9.0	34.7	40.2	25.1	16.1	.7520	.365	.344	.311	.377	.377	.311	.410	.384	.377	.371	.357	.371	.377	.377
10.0	35.0	40.8	25.6	15.1	.4960	.385	.380	.347	.347	.347	.347	.380	.406	.406	.413	.393	.413	.413	.419
11.0	34.9	41.1	25.9	16.6	.5254	.405	.396	.363	.363	.363	.363	.396	.436	.422	.442	.422	.429	.429	.436
12.0	34.9	41.2	26.2	16.5	.4851	.422	.412	.379	.379	.379	.379	.412	.439	.452	.439	.432	.465	.465	.452
13.0	34.8	41.3	26.5	17.3	.4799	.438	.421	.387	.387	.387	.387	.421	.468	.462	.468	.489	.468	.475	.468
14.0	34.6	41.1	26.7	18.5	.4769	.452	.421	.387	.387	.387	.456	.490	.470	.477	.483	.470	.497	.483	.470
CONMENCE VALVE CLOSURE																			
15.0	34.4	41.0	26.9	18.8	.4738	.466	.420	.420	.456	.420	.456	.491	.491	.477	.477	.491	.477	.491	.484
16.0	34.2	40.8	27.0	8.4	.4522	.478	.416	.453	.453	.453	.453	.489	.496	.504	.489	.496	.540	.496	.475
VALVE FULLY CLOSED																			
17.0	33.9	40.3	26.9	2.2	.1197	.479	.467	.429	.429	.429	.429	.467	.504	.489	.504	.519	.511	.534	.519
18.0	33.3	39.4	26.6	2.8	.1512	.479	.432	.471	.471	.393	.471	.510	.479	.510	.502	.479	.510	.502	.502
19.0	33.0	39.0	26.4	1.5	.0792	.479	.487	.447	.447	.447	.447	.487	.503	.495	.471	.503	.495	.503	.503
20.0	32.5	38.3	26.2	2.3	.1237	.479	.479	.437	.437	.437	.437	.479	.520	.487	.503	.503	.495	.520	.495
21.0	32.4	38.1	26.1	.8	.0426	.479	.471	.429	.429	.429	.429	.471	.504	.513	.496	.513	.529	.521	.496
22.0	32.2	37.9	26.1	.8	.0434	.479	.452	.410	.410	.410	.452	.494	.528	.503	.503	.537	.503	.520	.511
23.0	31.9	37.4	25.9	1.7	.0891	.479	.497	.454	.454	.454	.454	.497	.489	.463	.497	.489	.497	.506	.480
24.0	31.9	37.4	25.9	0.0	0.0000	.479	.491	.448	.448	.448	.448	.491	.483	.500	.483	.491	.517	.500	.483
25.0	31.6	37.0	25.8	1.7	.0924	.479	.485	.440	.440	.440	.440	.485	.494	.503	.476	.520	.494	.511	.503
26.0	31.5	36.8	25.7	.9	.0475	.479	.479	.433	.433	.433	.433	.479	.515	.488	.506	.515	.497	.524	.497
27.0	31.3	36.5	25.6	.9	.0484	.479	.475	.429	.429	.429	.429	.475	.503	.503	.521	.503	.521	.521	.493
28.0	31.1	36.3	25.5	.9	.0494	.479	.467	.421	.421	.421	.421	.467	.504	.532	.504	.523	.523	.514	.514
29.0	31.1	36.3	25.5	0.0	0.0000	.479	.493	.446	.446	.400	.446	.446	.502	.502	.493	.521	.502	.521	.511
30.0	30.8	35.9	25.4	1.9	.1018	.479	.518	.470	.470	.375	.470	.423	.499	.470	.509	.490	.509	.528	.499
31.0	30.8	35.9	25.4	0.0	0.0000	.479	.497	.449	.449	.449	.449	.497	.487	.487	.478	.497	.497	.497	.497
32.0	30.5	35.4	25.3	2.0	.1061	.479	.494	.444	.444	.444	.444	.494	.494	.484	.504	.494	.494	.513	.484
33.0	30.7	35.6	25.3	-1.0	-.0537	.479	.489	.440	.440	.440	.440	.489	.499	.508	.489	.508	.508	.489	.489
34.0	30.4	35.2	25.2	2.0	.1084	.479	.482	.432	.432	.432	.432	.482	.522	.492	.502	.522	.492	.512	.492

XXX

Table 32A — Scaling Run 54, Test Configuration 6: Three 1.52-cm Nozzles

t (s)	Press Tank P (atm)	T_s (K)	Chamber P (atm)	Chamber Absolute Temperatures (K) at Locations I 1	2	3	4	5	6	7	8	9	10	11	12	13
-5	***	***	1.016	298.2	297.2	297.2	298.2	298.2	298.2	296.7	295.5	295.4	296.7	296.5	296.5	296.4
-4	***	***	1.017	298.2	297.2	297.2	298.2	298.2	298.2	296.6	295.7	295.2	296.6	296.7	296.5	296.3
-3	***	***	1.016	298.2	297.2	297.2	298.2	298.2	298.2	296.7	295.5	295.4	296.7	296.5	296.5	296.4
-2	***	***	1.017	298.2	297.2	297.2	298.2	298.2	298.2	296.5	295.7	295.3	296.6	296.7	296.5	296.4
-1	***	***	1.016	298.2	297.2	297.2	298.2	298.2	298.2	296.7	295.5	295.2	296.7	296.4	296.5	296.3
0	6.230	297.2	1.024	298.2	297.2	297.2	298.2	298.2	298.2	296.7	296.3	295.8	297.0	297.0	296.8	296.5
1	5.976	286.2	1.116	301.2	300.2	299.2	299.2	300.2	301.2	299.9	300.0	299.0	300.9	300.3	300.2	299.7
2	5.676	278.2	1.240	305.2	304.2	302.2	303.2	304.2	304.2	304.2	303.6	302.3	304.8	303.9	303.4	303.4
3	5.301	276.7	1.352	308.2	307.2	306.2	306.2	307.2	307.2	306.4	305.8	304.8	306.6	306.6	306.1	305.8
4	5.055	275.2	1.457	310.2	309.2	308.2	309.2	309.2	309.2	308.4	307.2	306.0	308.3	307.8	307.4	307.3
5	4.769	274.2	1.552	310.2	310.2	309.7	309.7	310.2	310.2	309.5	308.1	307.1	308.8	308.5	308.4	308.1
6	4.545	273.2	1.643	311.2	310.2	310.2	310.2	311.2	311.2	309.9	308.7	307.8	309.3	308.9	308.8	308.7
7	4.329	273.2	1.729	311.2	311.2	310.2	310.7	311.2	311.2	310.0	308.9	308.0	309.7	309.4	308.9	308.8
8	4.101	272.2	1.809	311.2	311.2	311.2	311.2	311.2	311.2	310.2	309.0	308.5	309.6	309.5	309.2	309.1
9	3.876	272.2	1.886	311.2	311.2	311.2	311.2	311.2	311.2	310.2	308.8	308.4	309.3	308.9	309.2	308.9
10	3.758	272.2	1.934	311.2	311.2	310.7	310.7	310.7	310.7	310.0	308.6	308.4	309.1	309.3	308.9	309.0
11	3.572	272.2	2.030	311.2	311.2	310.2	310.2	310.2	310.2	309.4	308.7	307.9	309.3	309.4	308.8	308.8
12	3.461	269.2	2.086	310.2	310.2	310.2	310.2	310.2	310.2	309.2	308.1	307.0	308.6	308.5	308.4	308.3
13	3.472	273.2	2.045	310.2	310.2	310.2	310.2	310.2	310.2	308.7	307.5	307.3	308.7	308.1	308.2	307.8
14	***	***	2.046	309.2	310.2	310.2	310.2	310.2	310.2	308.7	307.6	307.2	308.2	308.1	307.9	307.7
15	***	***	2.044	309.2	309.2	309.2	309.7	309.7	309.7	308.7	307.2	307.3	308.1	307.9	307.7	307.5
16	***	***	2.041	309.2	309.2	309.2	309.2	309.2	309.2	308.3	307.2	306.8	308.1	307.9	307.6	307.3
17	***	***	2.039	309.2	309.2	309.2	309.2	309.2	309.2	308.2	307.1	306.8	307.8	307.8	307.4	307.0
18	***	***	2.037	309.2	309.2	309.2	309.2	309.2	309.2	308.2	306.8	306.7	307.9	307.5	307.1	306.9
19	***	***	2.036	308.7	308.7	308.7	309.2	308.7	309.2	307.6	306.7	306.5	307.5	307.5	307.0	306.5
20	***	***	2.034	308.2	308.2	308.2	308.2	308.2	309.2	307.7	306.4	306.4	307.5	307.3	306.8	306.5
21	***	***	2.032	308.2	308.2	308.2	308.2	308.2	308.2	306.9	305.9	305.9	307.1	306.9	306.6	306.5
26	***	***	2.026	307.2	307.2	307.2	308.2	307.2	308.2	306.1	305.2	304.8	305.9	306.0	305.5	305.4
31	***	***	2.022	306.2	306.2	306.2	307.2	306.2	307.2	305.6	304.5	304.5	305.4	305.7	305.3	305.0
36	***	***	2.017	306.2	306.2	306.2	306.2	306.2	306.2	305.2	304.0	303.7	305.0	304.9	304.6	304.5
41	***	***	2.014	305.2	305.2	305.2	306.2	305.2	306.2	304.5	303.1	303.3	304.4	304.5	304.2	304.0
46	***	***	2.010	305.2	305.2	305.2	305.2	305.2	305.2	303.8	302.8	302.4	303.8	303.9	303.5	303.5
51	***	***	2.008	304.2	304.2	304.2	304.2	304.2	305.2	303.4	302.3	302.1	303.2	303.3	303.1	303.0
56	***	***	2.005	304.2	304.2	304.2	304.2	304.2	304.2	303.1	301.8	301.8	302.9	302.9	302.8	302.6
61	***	***	2.004	304.2	304.2	304.2	304.2	304.2	304.2	302.7	301.5	301.4	302.5	302.6	302.4	302.3
66	***	***	2.001	303.2	303.2	303.2	304.2	303.7	304.2	302.2	301.0	301.0	302.3	302.2	302.1	301.9
71	***	***	2.000	303.2	303.2	303.2	303.2	303.2	303.2	301.8	301.0	300.5	301.8	302.2	301.8	301.5
81	***	***	1.996	302.2	302.2	302.2	303.2	303.2	303.2	301.5	300.4	300.3	301.2	301.5	301.4	301.2
91	***	***	1.990	302.2	302.2	302.2	302.2	302.2	302.2	301.0	300.0	299.7	300.9	301.0	300.9	300.8
101	***	***	1.988	302.2	302.2	302.2	302.2	302.2	302.2	300.6	299.5	299.4	300.3	300.4	300.4	300.3
111	***	***	1.985	302.2	301.2	301.2	302.2	301.2	301.2	300.2	299.1	299.0	300.2	300.1	300.1	299.9
121	***	***	1.984	301.2	301.2	301.2	301.2	301.2	301.2	299.9	298.9	298.7	299.8	299.9	299.7	299.7
131	***	***	1.982	301.2	301.2	301.2	301.2	301.2	301.2	299.6	298.8	298.5	299.5	299.6	299.5	299.5
141	***	***	1.980	301.2	301.2	300.2	301.2	300.7	301.2	299.5	298.5	298.3	299.5	299.4	299.4	299.2
151	***	***	1.979	300.2	300.2	300.2	300.2	300.2	300.2	299.1	298.4	298.0	299.2	299.4	299.0	299.0
161	***	***	1.977	300.2	300.2	300.2	300.2	300.2	300.2	299.2	298.1	297.9	299.1	299.0	299.0	298.8
171	***	***	1.976	300.2	300.2	300.2	300.2	300.2	300.2	299.0	298.2	297.8	298.8	299.0	298.8	298.7
181	***	***	1.975	300.2	300.2	300.2	300.2	300.2	300.2	298.9	298.0	297.8	298.8	298.8	298.8	298.7

I	COORDINATES R (M)	THETA (DEG)	Z (M)
1	0.457	45	-0.152
2	0.457	45	-0.076
3	0.457	45	0.0
4	0.457	45	0.076
5	0.457	45	0.152
6	0.457	45	0.229
7	0.457	45	0.530
8	0.457	45	0.610
9	0.457	45	0.687
10	0.457	45	0.762
11	0.457	45	0.838
12	0.457	45	0.914
13	0.457	45	0.991

Table 32B — Inferred Pressurant Distribution, Scaling Run 54, Test Configuration 6: Three 1.52-cm Nozzles

t (s)	$\bar{T}$ (°C)	$\bar{T}_s$ (°C)	$\bar{T}_p$ (°C)	β	β/θ	$\bar{X}$	Pressurant Fractions (X) at Locations I 1	2	3	4	5	6	7	8	9	10	11	12	13
COMMENCE VALVE OPENING																			
0.0	24.0	24.0	63.5	5.0	0.0000	0.000	0.000	0.000	0.000	0.000	0.000	0.000	0.000	0.000	0.000	0.000	0.000	0.000	
1.0	26.9	27.1	24.3	123.1	9.3910	.073	.040	.040	.401	.761	.401	.040	-.032	-.212	-.032	-.284	-.032	-.104	-.032
VALVE FULLY OPEN																			
2.0	30.5	32.0	22.6	28.5	2.6548	.156	.109	.109	.322	.322	.216	.216	.056	.077	.163	.035	.131	.152	.120
3.0	33.3	36.2	22.8	15.1	1.1711	.219	.167	.167	.241	.316	.241	.241	.189	.204	.241	.197	.204	.219	.219
4.0	35.1	39.3	23.6	13.0	.8950	.271	.213	.213	.277	.277	.277	.277	.232	.283	.328	.258	.296	.302	.290
5.0	35.9	41.2	24.4	13.4	.8090	.314	.310	.251	.281	.340	.310	.310	.263	.322	.352	.322	.346	.334	.334
6.0	36.5	42.7	25.1	12.9	.7104	.350	.324	.324	.324	.381	.324	.324	.313	.358	.381	.364	.392	.381	.369
7.0	36.8	43.6	25.7	13.4	.6742	.382	.369	.314	.369	.397	.369	.369	.353	.392	.414	.386	.408	.420	.408
8.0	37.0	44.4	26.2	12.9	.5762	.409	.409	.354	.354	.409	.409	.409	.381	.425	.425	.431	.442	.442	.431
9.0	36.9	44.7	26.7	14.2	.5570	.434	.427	.372	.372	.427	.427	.427	.399	.455	.449	.466	.494	.460	.460
COMMENCE VALVE CLOSURE																			
10.0	36.7	44.6	26.9	15.3	.3936	.448	.431	.375	.403	.459	.459	.459	.414	.470	.454	.482	.476	.482	.459
11.0	36.5	44.7	27.4	9.4	.7425	.474	.444	.386	.444	.502	.502	.502	.461	.478	.496	.484	.484	.502	.484
VALVE FULLY CLOSED																			
12.0	36.0	44.1	27.3	3.5	.2772	.481	.485	.425	.425	.485	.485	.485	.455	.497	.485	.508	.520	.508	.497
13.0	35.1	42.8	26.9	2.5	.1946	.481	.472	.409	.409	.472	.472	.472	.472	.523	.504	.491	.535	.510	.516
14.0	34.7	42.1	26.7	1.3	.1033	.481	.527	.398	.398	.463	.463	.463	.463	.508	.501	.514	.527	.521	.514
15.0	34.4	41.7	26.5	.9	.0713	.481	.505	.439	.439	.472	.472	.472	.439	.512	.472	.499	.519	.512	.505
16.0	33.9	41.0	26.3	1.4	.1110	.481	.492	.424	.424	.492	.492	.492	.451	.499	.492	.485	.506	.506	.506
17.0	33.6	40.5	26.2	1.0	.0768	.481	.486	.417	.417	.486	.486	.486	.451	.500	.486	.500	.507	.514	.521
18.0	33.3	40.1	26.1	1.0	.0792	.481	.481	.410	.410	.481	.481	.481	.445	.517	.488	.488	.524	.531	.524
19.0	33.2	39.8	26.0	.5	.0486	.481	.496	.424	.424	.460	.496	.460	.467	.503	.481	.496	.503	.518	.532
20.0	32.9	39.4	25.9	1.0	.0832	.481	.512	.438	.438	.512	.512	.438	.438	.505	.468	.475	.497	.512	.512
21.0	32.6	38.9	25.7	1.1	.0861	.481	.491	.415	.415	.491	.491	.491	.476	.521	.483	.483	.506	.506	.491
22.0	32.4	38.7	25.7	.6	.0442	.481	.480	.403	.403	.480	.480	.480	.488	.519	.496	.511	.503	.511	.503
23.0	32.3	38.5	25.6	.6	.0450	.481	.471	.393	.393	.471	.471	.471	.478	.549	.510	.517	.517	.510	.510
24.0	32.0	38.0	25.5	1.2	.0924	.481	.495	.415	.375	.455	.455	.455	.495	.543	.511	.519	.511	.527	.503
25.0	32.0	38.0	25.5	0.0	0.0000	.481	.519	.439	.359	.439	.519	.439	.471	.535	.495	.519	.519	.511	.495
26.0	31.7	37.5	25.4	1.2	.0959	.481	.505	.423	.423	.423	.505	.423	.472	.513	.505	.513	.513	.530	.513
27.0	31.7	37.5	25.4	0.0	0.0000	.481	.495	.413	.413	.495	.495	.454	.454	.520	.495	.495	.512	.512	.504
28.0	31.5	37.3	25.3	.6	.0494	.481	.484	.401	.401	.484	.484	.484	.467	.526	.501	.509	.501	.517	.501
29.0	31.2	36.8	25.2	1.3	.1019	.481	.482	.396	.396	.482	.482	.482	.463	.525	.508	.499	.508	.525	.508
30.0	31.2	36.8	25.2	0.0	0.0000	.481	.550	.464	.378	.464	.464	.464	.455	.532	.489	.489	.524	.498	.489
31.0	31.1	36.6	25.1	.7	.0525	.481	.534	.447	.447	.447	.534	.447	.455	.516	.473	.499	.481	.490	.490
32.0	30.8	36.1	25.0	1.4	.1085	.481	.522	.432	.432	.522	.522	.432	.450	.504	.504	.486	.486	.486	.486
33.0	30.8	36.1	25.0	0.0	0.0000	.481	.511	.421	.421	.511	.511	.511	.439	.511	.484	.484	.502	.475	.475
34.0	30.8	36.1	25.0	0.0	0.0000	.481	.505	.415	.415	.505	.505	.505	.451	.523	.478	.496	.496	.487	.478

Table 33A — Scaling Run 55, Test Configuration 6: Three 1.52-cm Nozzles

t (s)	Press Tank P (atm)	T_t (K)	Chamber P (atm)	Chamber Absolute Temperatures (K) at Locations I 1	2	3	4	5	6	7	8	9	10	11	12	13
-5	***	***	1.016	297.2	297.2	297.2	297.2	297.2	297.2	295.8	295.0	294.6	295.6	295.7	295.6	295.4
-4	***	***	1.017	297.2	297.2	297.2	297.2	297.2	297.2	295.7	295.1	294.5	295.6	295.7	295.6	295.4
-3	***	***	1.016	297.2	297.2	297.2	297.2	297.2	297.2	295.8	295.0	294.6	295.7	295.7	295.6	295.4
-2	***	***	1.017	297.2	297.2	297.2	297.2	297.2	297.2	295.6	295.1	294.5	295.5	295.8	295.7	295.3
-1	***	***	1.017	297.2	297.2	297.2	297.2	297.2	297.2	295.7	295.0	294.5	295.7	295.6	295.6	295.4
0	6.249	297.2	1.017	297.2	297.2	297.2	297.2	297.2	297.2	295.7	295.1	294.6	295.5	295.9	295.7	295.3
1	6.253	297.2	1.027	297.7	297.2	297.2	297.2	297.2	297.7	295.8	296.0	295.2	296.4	296.2	296.1	295.8
2	5.937	283.2	1.130	302.2	300.2	299.2	300.2	301.2	301.2	299.9	300.2	298.8	300.3	300.2	300.2	299.5
3	5.626	278.2	1.253	305.2	304.2	303.2	303.2	304.2	304.2	303.5	303.2	302.1	304.0	303.3	303.2	302.7
4	5.352	276.7	1.364	308.2	307.2	306.2	306.2	307.2	307.7	305.9	305.7	304.0	306.5	305.8	305.3	305.2
5	5.046	275.2	1.467	310.2	309.2	308.2	308.2	309.2	308.2	307.8	307.0	305.6	307.4	306.9	306.9	306.7
6	4.744	273.7	1.564	310.7	310.2	309.7	309.7	310.7	310.7	308.5	307.8	306.7	308.2	308.3	307.8	307.2
7	4.551	273.2	1.654	311.2	311.2	310.2	310.2	311.2	311.2	309.2	308.3	307.3	308.7	308.2	308.2	308.1
8	4.273	272.7	1.738	311.2	311.2	310.7	311.2	311.2	311.2	309.5	308.3	307.5	308.5	308.4	308.7	308.5
9	4.103	272.2	1.819	311.2	311.2	311.2	311.2	311.2	311.2	309.5	308.5	307.7	308.8	308.5	308.5	308.2
10	3.862	272.2	1.895	311.2	311.2	310.2	311.2	311.2	311.2	309.7	308.1	307.3	308.2	308.4	308.1	308.1
11	3.718	271.2	1.968	311.2	310.7	310.2	311.2	311.2	311.2	309.1	308.5	307.5	308.4	308.5	308.3	308.2
12	3.539	271.2	2.035	310.2	310.2	310.2	311.2	311.2	311.2	308.8	308.1	307.3	308.4	308.2	308.2	307.8
13	3.456	268.2	2.059	310.2	310.2	310.2	310.2	310.7	310.7	308.6	307.5	307.2	308.3	308.0	307.9	307.6
14	3.515	272.2	2.053	310.2	310.2	310.2	310.2	310.2	310.2	308.1	307.4	306.7	308.0	307.9	307.6	307.3
15	***	***	2.050	309.2	309.2	310.2	310.2	310.2	310.2	307.6	306.8	306.7	307.8	307.7	307.5	307.2
16	***	***	2.047	309.2	309.2	309.2	309.2	309.2	309.2	307.6	306.7	306.4	307.7	307.3	307.2	307.0
17	***	***	2.045	309.2	309.2	309.2	309.2	309.2	309.2	307.3	306.5	306.4	307.2	307.1	307.2	306.7
18	***	***	2.043	309.2	308.7	308.7	309.2	309.2	309.2	307.1	306.0	305.9	307.1	306.8	307.0	306.6
19	***	***	2.041	308.2	308.2	308.2	309.2	308.2	309.2	306.8	306.1	305.9	306.9	306.9	306.8	306.4
20	***	***	2.040	308.2	308.2	308.2	308.2	308.2	309.2	306.7	305.9	305.8	306.5	306.5	306.6	306.1
21	***	***	2.037	308.2	308.2	308.2	308.2	308.2	308.2	306.6	305.9	305.3	306.5	306.2	306.3	305.9
22	***	***	2.037	308.2	308.2	308.2	308.2	308.2	308.2	306.5	305.8	305.6	306.0	306.0	306.3	305.8
27	***	***	2.030	307.2	307.2	307.2	307.2	307.2	307.2	305.6	304.9	304.4	305.3	305.3	305.3	305.1
32	***	***	2.026	307.2	307.2	307.2	307.2	307.2	307.2	305.0	304.4	304.2	304.6	305.0	304.9	304.5
37	***	***	2.021	306.2	306.2	306.2	306.2	306.2	306.2	304.3	303.8	303.3	304.2	304.5	304.4	304.0
42	***	***	2.018	305.2	305.2	305.2	305.2	305.2	305.2	303.7	303.0	302.5	303.4	303.9	303.7	303.2
47	***	***	2.016	305.2	304.2	304.7	305.2	304.2	305.2	303.1	302.3	302.0	302.9	303.1	303.1	302.6
52	***	***	2.013	304.2	304.2	304.2	304.2	304.2	304.2	302.5	301.7	301.4	302.4	302.5	302.5	302.2
57	***	***	2.010	304.2	303.7	304.2	304.2	304.2	304.2	302.0	301.2	300.8	301.8	302.0	302.0	301.6
62	***	***	2.008	303.2	303.2	303.2	303.2	303.2	303.7	301.5	300.9	300.4	301.6	301.9	301.6	301.2
67	***	***	2.006	303.2	303.2	303.2	303.2	303.2	303.2	301.4	300.8	300.3	301.0	301.4	301.3	300.9
72	***	***	2.004	303.2	303.2	303.2	303.2	303.2	303.2	300.9	300.4	299.9	300.9	301.0	300.9	300.6
82	***	***	2.001	302.2	302.2	302.2	302.7	302.2	302.2	300.3	299.9	299.4	300.4	300.5	300.4	300.2
92	***	***	1.998	302.2	302.2	302.2	302.2	302.2	302.2	300.0	299.5	299.2	300.0	300.2	300.0	299.8
102	***	***	1.995	302.2	301.2	302.2	302.2	302.2	302.2	299.5	299.1	298.6	299.5	299.8	299.5	299.4
112	***	***	1.993	301.2	301.2	301.2	301.2	301.2	301.2	299.2	299.0	298.2	299.4	299.5	299.3	299.1
122	***	***	1.991	301.2	301.2	301.2	301.2	301.2	301.2	299.0	298.5	298.2	299.0	299.2	299.0	298.8
132	***	***	1.990	301.2	301.2	301.2	301.2	301.2	301.2	298.8	298.3	298.0	298.8	298.9	298.9	298.6
142	***	***	1.988	300.2	300.2	300.2	300.2	300.2	301.2	298.5	298.0	297.6	298.6	298.6	298.7	298.4
152	***	***	1.987	300.2	300.2	300.2	300.2	300.2	300.2	298.3	298.0	297.5	298.2	298.6	298.4	298.1
162	***	***	1.985	300.2	300.2	300.2	300.2	300.2	300.2	298.2	297.8	297.4	298.1	298.4	298.3	298.0
172	***	***	1.983	300.2	300.2	300.2	300.2	300.2	300.2	298.0	297.6	297.1	298.1	298.1	298.1	297.9
182	***	***	1.983	300.2	300.2	300.2	300.2	300.2	300.2	297.5	297.3	297.1	298.0	298.0	298.0	297.7

I	COORDINATES R (IN)	THETA (DEG)	Z (IN)
1	0.457	45	-0.152
2	0.457	45	-0.076
3	0.457	45	0.0
4	0.457	45	0.076
5	0.457	45	0.152
6	0.457	45	0.229
7	0.457	45	0.530
8	0.457	45	0.610
9	0.457	45	0.687
10	0.457	45	0.762
11	0.457	45	0.838
12	0.457	45	0.914
13	0.457	45	0.991

Table 33B — Inferred Pressurant Distribution, Scaling Run 55, Test Configuration 6: Three 1.52-cm Nozzles

t (s)	$\bar{T}$ (°C)	$\bar{T}_s$ (°C)	$\bar{T}_p$ (°C)	β	β/θ	$\bar{X}$	Pressurant Fractions (X) at Locations I 1	2	3	4	5	6	7	8	9	10	11	12	13
COMMENCE VALVE OPENING																			
0.0	23.0	23.0	97.0	.8	0.0000	0.000	0.000	0.000	0.000	0.000	0.000	0.000	0.000	0.000	0.000	0.000	0.000	0.000	
1.0	23.4	23.4	24.0	1108.8	9.5256	.009	.244	-.562	-.562	-.562	-.562	.244	-.562	1.050	.405	.888	-.078	.083	.083
VALVE FULLY OPEN																			
2.0	27.1	27.4	23.0	72.9	6.0637	.088	-.131	.316	.540	.316	.093	.093	.048	-.153	.048	-.086	.026	-.019	.048
3.0	30.4	32.1	21.9	24.3	2.2453	.168	.103	.201	.298	.298	.201	.201	.113	.093	.152	.054	.161	.152	.161
4.0	33.0	36.1	22.3	14.1	1.0738	.229	.154	.228	.301	.301	.228	.191	.213	.184	.272	.184	.235	.257	.235
5.0	34.6	39.0	23.3	12.9	.8720	.280	.189	.253	.317	.317	.253	.317	.246	.259	.317	.259	.317	.304	.291
6.0	35.7	41.2	24.1	11.8	.7096	.322	.276	.305	.334	.334	.276	.276	.316	.322	.357	.322	.340	.357	.369
7.0	36.3	42.7	24.8	12.3	.6649	.358	.316	.316	.371	.371	.316	.316	.343	.360	.388	.360	.410	.399	.383
8.0	36.5	43.6	25.3	12.7	.6209	.388	.359	.359	.387	.359	.359	.359	.370	.403	.419	.414	.441	.414	.403
9.0	36.6	44.2	25.8	13.0	.5907	.415	.390	.390	.390	.390	.390	.390	.401	.422	.439	.428	.466	.455	.450
10.0	36.3	44.3	26.2	14.3	.5938	.439	.401	.401	.457	.401	.401	.401	.401	.457	.473	.473	.484	.490	.468
COMMENCE VALVE CLOSURE																			
11.0	36.4	44.7	26.6	13.3	.5007	.460	.423	.450	.478	.423	.423	.423	.456	.456	.483	.483	.500	.500	.483
12.0	36.1	44.6	26.8	38.3	.5026	.478	.483	.483	.483	.426	.426	.426	.477	.483	.499	.488	.522	.511	.511
VALVE FULLY CLOSED																			
13.0	35.8	44.3	26.8	25.8	.2222	.485	.473	.473	.473	.473	.444	.444	.475	.507	.496	.484	.524	.519	.513
14.0	34.9	43.0	26.4	21.1	.1824	.485	.458	.458	.458	.458	.458	.458	.494	.500	.512	.488	.518	.524	.518
15.0	34.5	42.3	26.2	11.2	.0965	.485	.501	.501	.439	.439	.439	.439	.508	.520	.495	.483	.514	.514	.508
16.0	34.0	41.6	26.0	11.6	.1004	.485	.475	.475	.475	.475	.475	.475	.482	.501	.488	.463	.514	.507	.495
17.0	33.7	41.2	25.8	8.0	.0692	.485	.468	.468	.468	.468	.468	.468	.494	.507	.481	.481	.520	.501	.507
18.0	33.4	40.7	25.7	8.3	.0712	.485	.453	.486	.486	.453	.453	.453	.492	.526	.499	.479	.526	.499	.499
19.0	33.1	40.3	25.5	8.5	.0733	.485	.500	.500	.500	.433	.500	.433	.494	.500	.480	.473	.500	.494	.494
20.0	33.0	40.0	25.5	4.3	.0374	.485	.486	.486	.486	.486	.486	.418	.486	.500	.473	.486	.514	.493	.500
21.0	32.8	39.3	25.3	13.4	.1139	.485	.473	.473	.473	.473	.473	.473	.480	.487	.495	.473	.523	.502	.502
22.0	32.5	39.3	25.3	0.0	0.0000	.485	.469	.469	.469	.469	.469	.469	.484	.491	.469	.505	.533	.498	.505
23.0	32.2	38.5	25.1	9.3	.0804	.485	.458	.494	.494	.458	.458	.458	.480	.494	.480	.480	.531	.516	.502
24.0	32.1	38.7	25.1	4.8	.0411	.485	.452	.526	.452	.452	.452	.452	.482	.497	.475	.497	.526	.519	.519
25.0	31.9	38.4	25.0	4.9	.0419	.485	.462	.499	.499	.425	.499	.462	.484	.484	.484	.477	.529	.499	.499
26.0	31.8	38.2	24.9	4.9	.0426	.485	.482	.482	.482	.482	.482	.482	.474	.497	.467	.489	.512	.489	.482
27.0	31.5	37.7	24.8	10.1	.0873	.485	.473	.473	.473	.473	.473	.473	.481	.489	.489	.485	.520	.504	.489
28.0	31.5	37.7	24.8	0.0	0.0000	.485	.470	.470	.470	.470	.470	.470	.478	.493	.478	.501	.532	.509	.493
29.0	31.3	37.5	24.7	5.2	.0449	.485	.465	.465	.465	.465	.465	.465	.496	.496	.473	.512	.520	.512	.504
30.0	31.2	37.3	24.7	5.3	.0457	.485	.460	.460	.460	.460	.460	.460	.492	.500	.492	.500	.532	.516	.508
31.0	31.0	37.1	24.6	5.4	.0465	.485	.456	.456	.456	.456	.456	.456	.496	.513	.498	.505	.537	.513	.513
32.0	30.9	36.8	24.5	5.5	.0474	.485	.452	.452	.452	.452	.452	.452	.509	.509	.485	.523	.526	.517	.517
33.0	30.6	36.4	24.4	11.3	.0976	.485	.503	.503	.503	.419	.503	.419	.494	.486	.486	.486	.503	.494	.503
34.0	30.6	36.4	24.4	0.0	0.0000	.485	.487	.487	.487	.487	.487	.487	.470	.487	.470	.470	.512	.487	.487

Table 34A — Scaling Run 56, Test Configuration 6: Three 1.52-cm Nozzles

t (s)	Press Tank P (atm)	T_t (K)	Chamber P (atm)	Chamber Absolute Temperatures (K) at Locations I: 1	2	3	4	5	6	7	8	9	10	11	12	13
-5	***	***	1.017	297.2	297.2	297.2	297.2	297.2	297.2	295.4	294.6	294.2	295.1	295.4	295.3	295.2
-4	***	***	1.016	297.2	297.2	297.2	297.2	297.2	297.2	295.5	294.5	294.2	295.2	295.3	295.3	295.2
-3	***	***	1.017	297.2	297.2	297.2	297.2	297.2	297.2	295.4	294.6	294.3	295.1	295.4	295.3	295.2
-2	***	***	1.017	297.2	297.2	297.2	297.2	297.2	297.2	295.4	294.5	294.2	295.2	295.3	295.3	295.1
-1	***	***	1.016	297.2	297.2	297.2	297.2	297.2	297.2	295.5	294.5	294.4	295.2	295.2	295.3	295.2
0	6.283	297.2	1.019	297.2	297.2	297.2	297.2	297.2	297.2	295.3	295.0	294.4	295.5	295.3	295.4	295.2
1	5.914	299.2	1.143	300.2	299.2	298.2	298.2	299.2	300.2	299.9	300.1	299.0	300.2	300.2	300.3	299.5
2	5.601	276.7	1.264	305.2	303.7	302.7	303.2	304.2	303.7	303.9	303.5	302.0	303.6	303.1	303.5	303.0
3	5.287	275.2	1.376	308.2	307.2	306.2	306.2	307.2	307.2	306.1	305.1	303.7	305.4	305.2	305.4	305.2
4	5.024	274.2	1.479	309.2	308.7	308.2	308.2	309.2	309.2	307.6	306.6	304.8	306.8	306.8	307.0	306.6
5	4.741	273.2	1.574	310.2	310.2	309.2	310.2	310.2	310.2	308.2	307.2	306.2	307.2	307.4	307.8	307.5
6	4.533	273.2	1.663	310.2	310.2	310.2	310.2	310.2	310.2	308.8	307.6	306.4	308.2	307.9	308.1	307.8
7	4.271	272.2	1.747	311.2	310.2	310.2	310.2	310.7	310.7	309.1	308.0	307.2	308.1	308.3	308.3	308.2
8	4.048	271.2	1.829	311.2	311.2	311.2	311.2	311.2	311.2	309.7	308.3	307.6	309.1	308.4	308.1	308.1
9	3.873	271.2	1.903	311.2	310.2	310.7	310.7	310.7	310.7	309.2	308.0	307.5	308.4	308.5	308.4	308.1
10	3.657	271.2	1.976	311.2	310.2	310.2	310.2	310.2	310.2	308.7	307.5	307.4	309.0	308.0	308.3	308.1
11	3.534	271.2	2.041	310.2	310.2	310.2	310.2	310.2	310.2	308.7	307.4	306.8	307.8	308.0	307.8	307.8
12	3.451	269.2	2.059	310.2	310.2	310.2	310.2	310.2	310.2	308.2	307.0	306.6	307.3	307.6	307.5	307.3
13	3.480	270.2	2.053	309.2	309.2	309.2	309.2	309.2	310.2	307.8	306.7	306.4	307.3	307.2	307.1	307.2
14	***	***	2.049	309.2	309.2	309.2	309.2	309.2	309.2	307.3	306.5	305.9	307.1	307.1	306.7	306.6
15	***	***	2.047	309.2	309.2	309.2	309.2	309.2	309.2	307.3	306.1	305.9	306.7	306.7	306.8	306.7
16	***	***	2.045	308.7	308.2	308.2	308.7	308.2	309.2	306.8	306.1	305.7	306.6	306.6	306.6	306.6
17	***	***	2.043	308.2	308.2	308.2	308.2	308.2	308.2	306.7	305.8	305.7	306.4	306.5	306.5	306.3
18	***	***	2.041	308.2	306.2	308.2	308.2	308.2	308.2	306.4	305.7	305.2	306.3	306.3	306.1	306.1
19	***	***	2.040	308.2	308.2	308.2	308.2	308.2	308.2	306.3	305.2	305.2	305.9	305.9	306.1	305.9
20	***	***	2.038	307.2	307.2	308.2	308.2	308.2	308.2	305.8	305.1	304.8	305.7	305.9	305.8	305.8
21	***	***	2.037	307.2	307.2	308.2	308.2	308.2	308.2	305.8	304.8	304.7	305.6	305.5	305.7	305.7
26	***	***	2.031	307.2	307.2	307.2	307.2	307.2	307.2	305.2	304.2	303.9	304.9	304.9	304.9	304.8
31	***	***	2.027	306.2	306.2	306.2	306.2	306.2	306.7	304.6	303.7	303.7	304.1	304.5	304.5	304.2
36	***	***	2.023	305.2	305.2	305.7	306.2	306.2	306.2	304.1	303.1	302.9	303.8	303.8	303.9	303.6
41	***	***	2.019	304.7	304.2	305.2	305.2	305.2	305.2	303.3	302.6	302.4	303.1	303.6	303.3	303.1
46	***	***	2.015	304.2	304.2	304.2	304.2	304.2	304.7	302.9	302.0	301.8	302.7	302.9	302.8	302.5
51	***	***	2.013	304.2	303.2	304.2	304.2	304.2	304.2	302.2	301.3	301.2	302.1	302.3	302.2	302.1
56	***	***	2.010	303.2	303.2	303.2	304.2	303.2	304.2	301.9	301.0	300.7	301.4	302.0	301.7	301.5
61	***	***	2.009	303.2	303.2	303.2	302.2	303.2	303.2	301.5	300.8	300.3	301.1	301.5	301.3	301.0
66	***	***	2.006	303.2	303.2	303.2	303.2	303.2	303.2	301.2	300.3	300.2	300.9	301.0	300.9	300.8
71	***	***	2.005	303.2	302.2	302.2	302.2	303.2	302.2	300.9	300.2	299.8	300.6	300.9	300.9	300.6
81	***	***	2.001	302.2	302.2	302.2	302.2	302.2	302.2	300.2	299.6	299.1	300.0	300.4	300.3	300.1
91	***	***	1.999	302.2	301.2	302.2	302.2	302.2	302.2	299.6	299.1	298.7	299.5	299.9	299.7	299.5
101	***	***	1.996	301.2	301.2	301.2	301.2	301.2	301.2	299.9	298.7	298.5	299.2	299.3	299.5	299.2
111	***	***	1.994	301.2	301.2	301.2	301.2	301.2	301.2	299.0	298.5	298.1	298.9	299.0	299.0	298.8
121	***	***	1.991	301.2	300.2	300.2	301.2	301.2	301.2	298.9	298.2	297.9	298.6	298.8	298.8	298.7
131	***	***	1.990	300.2	300.2	300.2	300.2	300.2	300.2	298.7	297.9	297.7	298.4	298.4	298.6	298.4
141	***	***	1.988	300.2	300.2	300.2	300.2	300.2	300.2	298.5	297.8	297.4	298.1	298.4	298.4	298.1
151	***	***	1.986	300.2	300.2	300.2	300.2	300.2	300.2	298.2	297.5	297.3	298.1	298.1	298.1	298.0
161	***	***	1.985	300.2	300.2	300.2	300.2	300.2	300.2	298.1	297.4	297.0	297.8	298.0	297.9	297.7
171	***	***	1.984	300.2	300.2	300.2	300.2	300.2	300.2	297.9	297.3	296.9	297.7	297.9	297.8	297.8
181	***	***	1.983	300.2	299.2	299.2	299.2	299.2	300.2	297.8	297.2	296.8	297.5	297.7	297.7	297.5

COORDINATES

I	R (M)	THETA (DEG)	Z (M)
1	0.457	45	-0.152
2	0.457	45	-0.076
3	0.457	45	0.0
4	0.457	45	0.076
5	0.457	45	0.152
6	0.457	45	0.229
7	0.457	45	0.530
8	0.457	45	0.610
9	0.457	45	0.687
10	0.457	45	0.762
11	0.457	45	0.838
12	0.457	45	0.914
13	0.457	45	0.991

Table 34B — Inferred Pressurant Distribution, Scaling Run 56, Test Configuration 6: Three 1.52-cm Nozzles

t (s)	$\bar{T}$ (°C)	$\bar{T}_s$ (°C)	$\bar{T}_p$ (°C)	β	β/θ	$\bar{X}$	Pressurant Fractions (X) at Locations I 1	2	3	4	5	6	7	8	9	10	11	12	13
CONMENCE VALVE OPENING																			
0.0	22.9	22.9	57.5	6.2	0.0000	0.000	0.000	0.000	0.000	0.000	0.000	0.000	0.000	0.000	0.000	0.000	0.000	0.000	
1.0	26.4	24.4	25.9	123.8	12.7328	.090	1.102	2.207	3.312	3.312	3.207	1.102	-2.266	-3.319	-2.476	-2.476	-2.897	-2.687	-1.845
VALVE FULLY OPEN																			
2.0	30.3	31.2	25.7	26.2	2.2985	.174	.062	.335	.517	.426	.244	.335	-.048	-.029	.135	.043	.098	.043	.098
3.0	32.0	35.5	24.2	14.0	1.0703	.235	.140	.228	.316	.316	.228	.228	.157	.219	.290	.237	.237	.228	.228
4.0	34.4	38.5	24.2	12.6	.8458	.284	.250	.285	.320	.320	.250	.250	.225	.278	.361	.295	.285	.278	.292
5.0	35.4	40.6	24.6	12.2	.7266	.325	.293	.293	.356	.293	.293	.293	.299	.343	.374	.374	.349	.331	.337
6.0	35.7	41.8	25.0	13.3	.7181	.361	.350	.350	.350	.350	.350	.350	.320	.374	.410	.368	.374	.368	.374
7.0	36.1	42.8	25.3	12.6	.6067	.391	.342	.400	.400	.400	.371	.371	.354	.400	.412	.423	.400	.406	.400
8.0	36.5	44.1	26.0	11.3	.4990	.417	.397	.397	.397	.397	.397	.397	.375	.436	.441	.419	.447	.469	.458
9.0	36.2	44.1	26.2	14.5	.5896	.440	.402	.458	.430	.430	.430	.430	.407	.458	.452	.463	.446	.458	.463
CONMENCE VALVE CLOSURE																			
10.0	35.9	44.0	26.4	14.9	.5776	.462	.484	.461	.461	.461	.461	.461	.438	.490	.461	.490	.478	.467	.467
11.0	35.7	44.0	26.7	4.5	.4932	.479	.467	.467	.467	.467	.467	.467	.444	.501	.501	.507	.484	.501	.490
VALVE FULLY CLOSED																			
12.0	35.5	43.7	26.7	1.6	.1711	.484	.459	.459	.459	.459	.459	.459	.465	.517	.506	.529	.500	.512	.512
13.0	34.6	42.4	26.2	1.7	.1856	.484	.487	.487	.487	.487	.487	.425	.456	.505	.487	.499	.493	.505	.487
14.0	34.0	41.5	25.9	1.2	.1318	.484	.470	.470	.470	.470	.470	.470	.470	.502	.502	.495	.483	.515	.508
15.0	33.7	41.1	25.8	.6	.0686	.484	.464	.464	.464	.464	.464	.464	.464	.523	.497	.517	.504	.504	.497
16.0	33.4	40.6	25.7	.6	.0706	.484	.471	.504	.504	.471	.504	.437	.471	.497	.484	.497	.484	.491	.477
17.0	33.1	40.2	25.5	.7	.0726	.484	.488	.488	.488	.488	.488	.488	.461	.502	.468	.495	.475	.481	.481
18.0	32.8	39.7	25.4	.7	.0748	.484	.479	.479	.479	.479	.479	.479	.472	.500	.493	.493	.479	.500	.486
19.0	32.6	39.5	25.3	.4	.0382	.484	.470	.470	.470	.470	.470	.470	.470	.526	.484	.512	.498	.491	.491
20.0	32.3	39.0	25.2	.7	.0783	.484	.522	.522	.450	.450	.450	.450	.486	.515	.493	.507	.479	.493	.479
21.0	32.2	38.8	25.1	.4	.0401	.484	.516	.516	.443	.443	.443	.443	.480	.531	.494	.509	.501	.494	.480
22.0	32.0	38.6	25.0	.4	.0408	.484	.503	.503	.503	.429	.429	.429	.495	.525	.495	.525	.473	.495	.488
23.0	31.7	38.1	24.9	.8	.0835	.484	.486	.486	.486	.410	.486	.486	.478	.516	.501	.509	.478	.493	.478
24.0	31.7	38.1	24.9	0.0	0.0000	.484	.477	.477	.477	.477	.477	.477	.470	.523	.477	.515	.477	.485	.485
25.0	31.4	37.7	24.8	.8	.0864	.484	.471	.471	.471	.471	.471	.471	.479	.518	.494	.518	.471	.502	.486
26.0	31.3	37.4	24.7	.4	.0444	.484	.464	.464	.464	.464	.464	.464	.472	.527	.503	.511	.496	.503	.496
27.0	31.3	37.4	24.7	0.0	0.0000	.484	.462	.462	.462	.462	.462	.462	.485	.540	.493	.517	.485	.501	.501
28.0	31.0	37.0	24.6	.8	.0912	.484	.488	.488	.448	.448	.448	.448	.488	.521	.497	.529	.480	.505	.505
29.0	30.8	36.7	24.5	.4	.0469	.484	.513	.513	.513	.431	.431	.431	.464	.513	.497	.513	.480	.505	.488
30.0	30.8	36.7	24.5	0.0	0.0000	.484	.503	.503	.503	.421	.503	.421	.462	.519	.487	.503	.487	.495	.487
31.0	30.7	36.5	24.5	.4	.0478	.484	.489	.489	.489	.489	.489	.448	.464	.514	.464	.522	.464	.481	.489
32.0	30.4	36.0	24.3	.9	.0983	.484	.480	.480	.480	.480	.480	.480	.462	.497	.488	.514	.462	.497	.497
33.0	30.4	36.0	24.3	0.0	0.0000	.484	.546	.546	.461	.461	.461	.461	.444	.504	.478	.495	.470	.478	.487
34.0	30.2	35.8	24.3	.5	.0507	.484	.541	.541	.455	.455	.455	.455	.463	.524	.463	.515	.455	.481	.489

Table 35A — Scaling Run 58, Test Configuration 6: Three 2.54-cm Nozzles

t (s)	Press Tank P (atm)	T_t (K)	Chamber P (atm)	Chamber Absolute Temperatures (K) at Locations I 1	2	3	4	5	6	7	8	9	10	11	12	13
-5	***	***	1.024	294.2	293.2	293.2	294.2	294.2	294.2	292.7	291.7	291.6	292.7	292.6	292.5	292.4
-4	***	***	1.023	294.2	293.2	293.2	294.2	294.2	294.2	292.8	291.7	291.5	292.6	292.6	292.5	292.4
-3	***	***	1.023	294.2	293.2	293.2	294.2	294.2	294.2	292.8	291.7	291.6	292.6	292.8	292.5	292.4
-2	***	***	1.024	294.2	293.2	293.2	294.2	294.2	294.2	292.8	291.7	291.4	292.6	292.5	292.5	292.5
-1	***	***	1.024	294.2	293.2	293.2	294.2	294.2	294.2	292.7	291.7	291.5	292.8	292.7	292.5	292.4
0	6.343	292.2	1.023	294.2	294.2	293.2	294.2	294.2	294.2	292.7	291.7	291.6	292.8	292.6	292.5	292.4
1	6.326	292.2	1.023	294.2	293.2	293.2	294.2	294.2	294.2	292.7	291.9	291.6	292.6	292.6	292.5	292.4
2	5.871	284.2	1.215	300.2	298.2	295.2	297.2	299.2	298.2	298.7	300.9	298.9	301.2	300.3	299.2	298.7
3	5.091	273.2	1.505	306.2	303.2	302.2	303.2	305.2	305.2	307.0	307.1	305.4	308.5	307.6	306.9	305.9
4	4.475	270.2	1.740	310.7	309.2	308.2	308.2	309.2	309.2	310.0	309.5	308.2	310.4	309.9	309.0	308.8
5	3.905	268.2	1.949	312.2	311.2	311.2	311.2	311.2	311.2	311.3	310.2	309.9	311.5	311.2	310.9	310.2
6	3.482	266.7	2.119	312.7	312.2	311.7	311.2	312.2	311.7	311.5	310.6	310.2	311.9	311.8	311.3	311.0
7	3.248	271.2	2.197	312.2	312.2	311.2	311.2	312.2	311.2	311.1	309.8	309.6	310.9	310.9	310.7	310.6
8	3.255	283.2	2.187	311.2	311.2	311.2	311.2	311.2	311.2	310.2	309.2	309.0	310.4	310.2	310.0	309.8
9	***	***	2.181	311.2	310.7	310.7	310.7	310.7	310.7	310.0	308.8	308.8	310.0	310.0	309.9	309.7
10	***	***	2.176	310.2	310.2	310.2	310.2	310.2	310.2	309.4	308.5	308.4	309.5	309.5	309.4	309.4
11	***	***	2.171	310.2	310.2	310.2	310.2	310.2	310.2	309.2	308.2	308.1	309.2	308.8	308.8	308.8
12	***	***	2.168	310.2	310.2	310.2	310.2	310.2	310.2	309.4	308.2	308.0	309.1	309.0	308.7	308.4
13	***	***	2.164	310.2	309.7	309.7	309.7	309.7	310.2	309.2	308.0	307.6	308.7	308.8	308.5	308.2
14	***	***	2.162	309.2	309.2	309.2	309.2	309.2	310.2	308.8	307.5	307.3	308.6	308.5	308.4	308.1
15	***	***	2.160	309.2	309.2	309.2	309.2	309.2	309.2	308.6	307.1	307.1	308.5	308.2	308.3	308.0
16	***	***	2.157	309.2	309.2	309.2	309.2	309.2	309.2	308.2	306.9	306.8	308.2	308.2	308.1	307.7
21	***	***	2.146	308.2	308.2	308.2	308.2	308.2	308.2	307.0	305.9	305.7	306.8	307.0	306.7	306.3
26	***	***	2.138	307.2	306.2	306.2	307.2	306.2	307.2	306.1	305.0	304.8	305.8	306.2	305.9	305.7
31	***	***	2.130	306.2	305.2	306.2	306.2	306.2	306.2	305.1	304.0	303.9	305.1	305.2	304.9	304.5
36	***	***	2.124	304.2	304.2	305.2	305.2	305.2	305.2	304.0	303.1	302.8	304.0	304.4	303.9	303.5
41	***	***	2.120	304.2	304.2	304.2	304.2	304.2	304.2	303.3	302.3	302.1	303.2	303.4	303.1	302.7
46	***	***	2.115	303.2	303.2	303.2	304.2	303.2	304.2	302.5	301.4	301.0	302.4	302.8	302.4	302.1
51	***	***	2.111	302.2	302.2	303.2	303.2	303.2	303.2	302.0	300.6	300.5	301.5	302.0	301.7	301.3
56	***	***	2.107	302.2	302.2	302.2	302.2	302.2	302.2	301.2	300.0	300.0	301.0	301.1	301.0	300.9
61	***	***	2.104	301.2	301.2	302.2	302.2	302.2	302.2	300.9	299.6	299.5	300.7	300.6	300.4	300.3
66	***	***	2.101	301.2	301.2	301.2	301.2	301.2	301.2	300.2	299.2	299.0	300.2	300.4	300.0	299.9
76	***	***	2.096	300.2	300.2	300.2	300.2	300.2	300.2	299.4	298.3	298.2	299.2	299.6	299.3	299.0
86	***	***	2.092	299.2	299.2	299.7	300.2	300.2	300.2	298.8	297.7	297.6	298.5	298.8	298.6	298.4
96	***	***	2.088	299.2	299.2	299.2	299.2	299.2	299.2	298.2	297.2	296.9	298.0	298.1	298.0	297.9
106	***	***	2.085	299.2	298.2	298.2	299.2	299.2	299.2	297.8	296.7	296.4	297.5	297.7	297.5	297.5
116	***	***	2.082	298.2	298.2	298.2	298.2	298.2	298.2	297.4	296.4	296.1	297.3	297.3	297.2	297.1
126	***	***	2.080	298.2	298.2	298.2	298.2	298.2	298.2	297.1	295.9	295.9	296.8	296.8	296.9	296.7
136	***	***	2.077	297.2	297.2	297.2	298.2	298.2	298.2	296.8	295.6	295.4	296.7	296.7	296.5	296.4
146	***	***	2.076	297.2	297.2	297.2	297.2	297.2	297.2	296.4	295.5	295.2	296.3	296.7	296.3	296.2
156	***	***	2.073	297.2	297.2	297.2	297.2	297.2	297.2	296.3	295.2	295.0	296.1	296.3	296.0	295.9
166	***	***	2.072	297.2	297.2	297.2	297.2	297.2	297.2	296.0	295.1	294.8	296.0	296.0	295.9	295.7
176	***	***	2.070	297.2	297.2	297.2	297.2	297.2	297.2	295.9	294.8	294.6	295.9	295.7	295.7	295.5
186	***	***	2.069	297.2	296.2	296.2	297.2	297.2	297.2	295.6	294.7	294.5	295.7	295.6	295.5	295.4

I	COORDINATES R (M)	THETA (DEG)	Z (M)
1	0.457	45	-0.152
2	0.457	45	-0.076
3	0.457	45	0.0
4	0.457	45	0.076
5	0.457	45	0.152
6	0.457	45	0.229
7	0.457	45	0.530
8	0.457	45	0.610
9	0.457	45	0.687
10	0.457	45	0.762
11	0.457	45	0.838
12	0.457	45	0.914
13	0.457	45	0.991

Table 35B — Inferred Pressurant Distribution, Scaling Run 58, Test Configuration 6: Three 2.54-cm Nozzles

t (s)	$\bar{T}$ (°C)	$\bar{T}_c$ (°C)	$\bar{T}_s$ (°C)	β	β/θ	$\bar{X}$	Pressurant Fractions (X) at Locations I 1	2	3	4	5	6	7	8	9	10	11	12	13
COMMENCE VALVE OPENING																			
0.0	19.9	19.9	69.2	.0	0.0000	0.000	0.000	0.000	0.000	0.000	0.000	0.000	0.000	0.000	0.000	0.000	0.000	0.000	
1.0	19.9	19.9	19.0	33.4	.0061	.059	0.000	1.102	0.000	0.000	0.000	0.000	0.000	-.220	0.000	-.110	0.000	0.000	0.000
VALVE FULLY OPEN																			
2.0	25.7	26.2	22.4	59.3	9.0119	.141	.095	.616	1.137	.877	.356	.616	.095	-.739	-.243	-.556	-.348	-.087	.017
3.0	32.6	36.3	23.6	14.0	2.6604	.291	.347	.425	.583	.583	.425	.425	.165	.079	.205	.047	.110	.157	.228
4.0	36.1	43.1	24.6	8.1	1.0880	.380	.361	.442	.442	.496	.442	.442	.318	.291	.356	.297	.318	.361	.367
COMMENCE VALVE CLOSURE																			
5.0	37.8	47.6	25.5	7.4	.7903	.443	.439	.484	.439	.484	.484	.484	.412	.417	.426	.403	.412	.421	.448
6.0	38.3	50.0	26.0	3518.5	.6463	.487	.484	.505	.484	.547	.505	.526	.471	.467	.480	.455	.455	.471	.480
VALVE FULLY CLOSED																			
7.0	37.9	49.9	26.1	2195.3	.4033	.506	.504	.504	.504	.546	.504	.546	.487	.500	.504	.495	.491	.495	.495
8.0	36.4	47.8	25.4	1117.3	.2052	.506	.521	.521	.477	.521	.521	.521	.503	.499	.503	.490	.495	.499	.503
9.0	35.6	46.5	24.9	717.5	.1318	.506	.508	.531	.484	.531	.531	.531	.494	.503	.498	.494	.489	.489	.494
10.0	34.9	45.4	24.6	628.3	.1154	.506	.531	.531	.483	.531	.531	.531	.498	.493	.493	.493	.488	.488	.483
11.0	34.2	44.4	24.2	658.7	.1210	.506	.521	.521	.471	.521	.521	.521	.496	.496	.496	.496	.511	.506	.501
12.0	33.8	43.7	24.0	411.1	.0755	.506	.520	.520	.469	.520	.520	.520	.484	.495	.500	.500	.500	.510	.520
13.0	33.5	43.3	23.9	281.3	.0517	.506	.505	.531	.479	.531	.531	.505	.479	.490	.505	.505	.495	.505	.515
14.0	32.9	42.4	23.6	580.3	.1066	.506	.539	.539	.485	.539	.539	.485	.480	.496	.501	.491	.491	.491	.501
15.0	32.6	42.0	23.5	299.8	.0551	.506	.529	.529	.475	.529	.529	.529	.480	.508	.502	.486	.497	.486	.497
16.0	32.2	41.3	23.3	462.3	.0849	.506	.522	.522	.467	.522	.522	.522	.495	.511	.511	.495	.489	.489	.506
17.0	31.9	40.9	23.1	317.1	.0583	.506	.515	.515	.459	.515	.515	.515	.498	.510	.515	.510	.493	.498	.515
18.0	31.6	40.5	23.0	324.9	.0597	.506	.502	.531	.474	.502	.531	.502	.491	.508	.508	.508	.502	.502	.514
19.0	31.2	39.1	23.5	502.1	.0922	.506	.537	.537	.473	.473	.537	.537	.473	.499	.499	.499	.493	.499	.518
20.0	30.9	38.5	23.5	345.4	.0635	.506	.525	.525	.458	.525	.525	.525	.478	.498	.511	.498	.498	.492	.518
21.0	30.6	37.4	24.0	354.4	.0651	.506	.518	.518	.444	.518	.518	.518	.496	.504	.511	.511	.489	.504	.526
22.0	30.5	37.2	24.0	180.7	.0332	.506	.506	.582	.430	.506	.506	.506	.491	.521	.498	.513	.498	.498	.521
23.0	30.2	36.3	24.3	368.7	.0677	.506	.556	.556	.473	.515	.556	.515	.482	.490	.490	.490	.482	.473	.498
24.0	29.9	36.0	24.0	379.2	.0697	.506	.543	.543	.460	.543	.543	.543	.476	.493	.493	.501	.460	.476	.501
25.0	29.6	35.4	24.0	389.9	.0716	.506	.533	.576	.445	.533	.533	.533	.472	.498	.498	.507	.472	.480	.498
26.0	29.5	35.1	24.0	199.2	.0366	.506	.508	.598	.508	.508	.598	.508	.472	.481	.490	.499	.454	.472	.481
27.0	29.2	34.6	24.0	407.5	.0749	.506	.580	.580	.485	.580	.580	.485	.467	.476	.476	.476	.457	.457	.476
28.0	29.1	34.3	24.0	208.3	.0383	.506	.564	.564	.467	.564	.564	.516	.486	.477	.477	.496	.448	.467	.486
29.0	28.9	34.0	24.0	211.8	.0389	.506	.554	.554	.454	.554	.554	.554	.474	.484	.494	.474	.464	.474	.484
30.0	28.7	33.4	24.0	433.2	.0796	.506	.543	.596	.436	.543	.543	.543	.479	.490	.479	.500	.458	.468	.500
31.0	28.4	32.9	24.0	447.7	.0822	.506	.528	.641	.415	.528	.528	.528	.483	.495	.495	.483	.461	.483	.506
32.0	28.4	32.9	24.0	0.0	0.0000	.506	.613	.613	.500	.500	.500	.500	.477	.488	.477	.477	.466	.466	.500
33.0	28.1	32.2	24.0	463.0	.0851	.506	.591	.591	.471	.531	.591	.471	.471	.483	.471	.483	.446	.458	.519
34.0	28.0	32.0	24.0	237.4	.0436	.506	.565	.565	.439	.565	.565	.565	.464	.464	.489	.464	.439	.477	.515

Table 36A — Scaling Run 59, Test Configuration 6: Three 2.54-cm Nozzles

t (s)	Press Tank P (atm)	T_t (K)	Chamber P (atm)	Chamber Absolute Temperatures (K) at Locations I 1	2	3	4	5	6	7	8	9	10	11	12	13
-5	***	***	1.024	294.2	294.2	294.2	294.2	294.2	294.2	293.3	292.2	291.9	293.1	293.2	293.1	293.0
-4	***	***	1.023	294.2	294.2	294.2	294.2	294.2	294.2	293.3	292.2	292.0	293.1	293.1	293.0	293.0
-3	***	***	1.023	294.2	294.2	294.2	294.2	294.2	294.2	293.3	292.2	291.9	293.1	293.2	292.9	292.9
-2	***	***	1.023	294.2	294.2	294.2	294.2	294.2	294.2	293.3	292.2	292.0	293.1	293.2	293.0	293.0
-1	***	***	1.023	294.2	294.2	294.2	294.2	294.2	294.2	293.3	292.3	291.9	293.1	293.3	293.0	292.9
0	6.300	293.7	1.028	294.7	294.2	294.2	294.2	294.2	294.7	293.3	292.8	292.3	293.4	293.4	293.0	293.0
1	5.696	280.2	1.287	302.2	300.2	297.2	298.2	301.2	301.2	301.2	303.0	301.0	303.9	302.9	302.3	301.3
2	4.911	273.2	1.562	307.2	306.2	303.2	304.2	306.2	306.2	307.5	308.1	306.5	309.1	308.7	308.0	307.0
3	4.359	270.2	1.791	311.2	310.2	308.7	308.7	310.2	309.2	310.6	310.1	309.2	311.5	311.2	310.9	310.3
4	3.796	268.2	1.991	312.2	312.2	311.2	311.2	312.2	311.2	311.7	310.9	310.4	312.3	312.2	312.3	313.8
5	3.449	267.2	2.138	313.2	312.2	312.2	312.2	312.2	312.2	312.2	311.1	310.4	312.1	312.0	311.8	311.3
6	3.341	277.2	2.164	312.2	312.2	312.2	311.2	311.2	311.2	311.3	310.0	309.9	311.1	310.7	310.6	310.3
7	3.363	286.7	2.155	311.2	311.2	311.2	311.2	311.2	311.2	310.6	309.5	309.3	310.5	310.3	310.0	309.8
8	***	***	2.149	311.2	311.2	310.2	311.2	310.2	310.2	310.2	309.1	308.9	310.3	309.8	309.6	309.7
9	***	***	2.145	311.2	311.2	310.2	310.2	310.2	310.2	309.8	308.7	308.8	309.8	309.6	309.3	309.3
10	***	***	2.142	310.2	310.2	310.2	310.2	310.2	310.2	309.5	308.7	308.2	309.5	309.4	309.0	308.9
11	***	***	2.139	310.2	310.2	310.2	310.2	310.2	310.2	309.4	308.3	308.2	309.4	309.1	308.8	308.8
12	***	***	2.136	310.2	310.2	310.2	310.2	310.2	310.2	309.4	308.0	308.1	309.2	308.8	308.8	308.5
13	***	***	2.133	310.2	310.2	310.2	310.2	310.2	310.2	309.1	308.0	307.7	309.0	308.8	308.6	308.4
14	***	***	2.131	310.2	310.2	310.2	310.2	310.2	310.2	308.8	307.9	307.5	308.5	308.7	308.4	308.1
15	***	***	2.128	310.2	310.2	309.7	310.2	309.2	310.2	308.8	307.6	307.5	308.5	308.2	308.2	308.0
20	***	***	2.119	309.2	308.2	309.2	309.2	308.2	309.2	308.1	306.5	306.6	307.9	307.7	307.6	307.2
25	***	***	2.110	307.2	307.2	307.2	308.2	307.2	308.2	306.8	305.6	305.5	306.8	306.9	306.6	306.4
30	***	***	2.103	306.2	306.2	306.2	307.2	306.2	307.2	305.7	304.5	304.4	305.6	305.9	305.5	305.2
35	***	***	2.096	305.2	305.2	305.2	306.2	306.2	306.2	304.6	303.6	303.4	304.6	304.8	304.4	303.9
40	***	***	2.092	304.2	304.2	305.2	305.2	305.2	305.2	303.9	302.8	302.5	303.9	303.9	303.7	303.3
45	***	***	2.087	304.2	304.2	304.2	304.2	304.2	304.2	303.2	302.1	301.9	302.9	303.3	303.1	302.7
50	***	***	2.083	303.2	303.2	303.2	303.2	303.2	304.2	302.4	301.3	300.9	302.3	302.6	302.4	302.0
55	***	***	2.079	302.2	302.2	302.2	303.2	303.2	303.2	301.7	300.7	300.2	301.5	301.9	301.7	301.4
60	***	***	2.077	302.2	302.2	302.2	302.2	302.2	302.2	301.2	300.2	299.7	300.9	301.5	301.2	300.9
65	***	***	2.073	301.2	301.2	302.2	302.2	302.2	302.2	300.8	299.5	299.4	300.5	300.8	300.7	300.5
75	***	***	2.068	301.2	301.2	301.2	301.2	301.2	301.2	299.9	298.8	298.7	299.9	299.9	299.9	299.7
85	***	***	2.064	300.2	300.2	300.2	300.2	300.2	300.2	299.3	298.2	298.0	298.8	299.5	299.2	299.0
95	***	***	2.060	299.2	299.2	299.2	300.2	300.2	300.2	298.7	297.7	297.3	298.6	298.7	298.6	298.4
105	***	***	2.057	299.2	299.2	299.2	299.2	299.2	299.2	298.3	297.3	297.0	298.1	298.2	298.0	298.0
115	***	***	2.054	299.2	298.2	298.2	299.2	299.2	299.2	297.9	296.9	296.6	297.7	297.8	297.7	297.5
125	***	***	2.052	298.2	298.2	298.2	298.2	298.2	298.2	297.5	296.5	296.3	297.4	297.5	297.4	297.2
135	***	***	2.049	298.2	298.2	298.2	298.2	298.2	298.2	297.2	296.3	295.8	297.1	297.3	297.0	296.8
145	***	***	2.047	298.2	298.2	298.2	298.2	298.2	298.2	296.9	296.0	295.5	296.8	296.9	296.8	296.7
155	***	***	2.046	297.2	297.2	297.2	298.2	298.2	298.2	296.7	295.7	295.3	296.7	296.7	296.5	296.4
165	***	***	2.044	297.2	297.2	297.2	297.2	297.2	297.2	296.5	295.5	295.3	296.5	296.5	296.4	296.2
175	***	***	2.043	297.2	297.2	297.2	297.2	297.2	297.2	296.4	295.3	295.1	296.3	296.4	296.3	296.0
185	***	***	2.041	297.2	297.2	297.2	297.2	297.2	297.2	296.2	295.2	294.9	296.1	296.1	296.0	295.9

COORDINATES

I	R (M)	THETA (DEG)	Z (M)
1	0.457	45	-0.152
2	0.457	45	-0.076
3	0.457	45	0.0
4	0.457	45	0.076
5	0.457	45	0.152
6	0.457	45	0.229
7	0.457	45	0.530
8	0.457	45	0.610
9	0.457	45	0.687
10	0.457	45	0.762
11	0.457	45	0.838
12	0.457	45	0.914
13	0.457	45	0.991

Table 36B — Inferred Pressurant Distribution, Scaling Run 59, Test Configuration 6: Three 2.54-cm Nozzles

t (s)	$\bar{T}$ (°C)	$\bar{T}_s$ (°C)	$\bar{T}_p$ (°C)	β	β/θ	$\bar{X}$	Pressurant Fractions (X) at Locations I 1	2	3	4	5	6	7	8	9	10	11	12	13
COMMENCE VALVE OPENING																			
0.0	20.4	20.4	33.7	7.4	0.0000	0.000	0.000	0.000	0.000	0.000	0.000	0.000	0.000	0.000	0.000	0.000	0.000	0.000	
1.0	28.0	29.0	23.5	43.7	8.6675	.181	.195	.468	1.015	.832	.286	.377	.122	-.316	-.024	-.352	-.170	-.133	.049
VALVE FULLY OPEN																			
2.0	33.6	37.9	24.1	12.5	2.1779	.312	.359	.395	.612	.540	.395	.431	.235	.149	.235	.127	.156	.178	.250
3.0	37.0	44.5	25.3	7.6	.9547	.394	.395	.421	.499	.499	.421	.499	.353	.348	.374	.311	.327	.322	.353
COMMENCE VALVE CLOSURE																			
4.0	38.6	48.8	26.2	7.1	.7113	.452	.482	.460	.504	.504	.460	.527	.443	.451	.456	.420	.425	.403	.336
5.0	38.7	50.4	26.5	2.7	.5973	.489	.481	.501	.501	.501	.501	.522	.464	.485	.497	.472	.476	.468	.489
VALVE FULLY CLOSED																			
6.0	37.9	49.3	26.3	1.2	.2625	.497	.494	.473	.473	.516	.516	.538	.473	.503	.490	.486	.503	.490	.503
7.0	36.6	47.4	25.6	.9	.1925	.497	.516	.493	.493	.493	.493	.516	.479	.502	.493	.488	.497	.493	.502
8.0	35.7	46.1	25.2	.6	.1272	.497	.497	.473	.521	.473	.521	.545	.478	.502	.492	.478	.502	.492	.487
9.0	35.2	45.3	24.9	.4	.0959	.497	.484	.460	.509	.509	.509	.533	.484	.509	.484	.489	.499	.494	.494
10.0	34.7	44.6	24.7	.3	.0743	.497	.518	.493	.493	.493	.493	.518	.483	.493	.498	.488	.493	.493	.498
11.0	34.3	44.0	24.5	.3	.0767	.497	.514	.488	.488	.488	.488	.514	.483	.509	.494	.488	.504	.499	.499
12.0	33.9	43.3	24.3	.4	.0791	.497	.510	.483	.483	.483	.483	.510	.478	.520	.494	.494	.515	.494	.510
13.0	33.4	42.7	24.1	.4	.0816	.497	.505	.478	.478	.478	.478	.505	.489	.516	.510	.500	.510	.500	.510
14.0	33.1	42.2	23.9	.3	.0559	.497	.498	.471	.471	.471	.471	.498	.498	.514	.514	.520	.509	.503	.520
15.0	32.7	41.6	23.7	.4	.0864	.497	.487	.459	.487	.459	.515	.487	.487	.520	.504	.509	.526	.504	.515
16.0	32.4	41.1	23.6	.3	.0592	.497	.471	.499	.499	.442	.499	.528	.488	.522	.511	.482	.505	.499	.511
17.0	32.1	40.7	23.5	.3	.0607	.497	.513	.484	.484	.484	.484	.513	.478	.519	.501	.495	.501	.495	.507
18.0	31.8	40.2	23.3	.3	.0622	.497	.506	.477	.477	.477	.477	.506	.471	.530	.506	.489	.512	.500	.530
19.0	31.6	39.8	23.2	.3	.0638	.497	.506	.475	.475	.475	.475	.506	.487	.530	.506	.500	.500	.500	.524
20.0	31.4	39.6	23.1	.1	.0325	.497	.492	.522	.462	.462	.522	.492	.474	.535	.504	.492	.504	.486	.510
21.0	31.0	38.9	22.9	.5	.1002	.497	.534	.503	.503	.503	.503	.471	.477	.515	.503	.490	.477	.484	.496
22.0	30.8	38.7	22.9	.2	.0343	.497	.521	.489	.489	.489	.489	.521	.476	.527	.489	.495	.489	.483	.502
23.0	30.6	38.3	22.8	.3	.0701	.497	.515	.482	.482	.482	.482	.515	.489	.527	.508	.489	.489	.489	.508
24.0	30.4	38.0	22.7	.2	.0358	.497	.534	.534	.469	.469	.469	.501	.488	.527	.495	.508	.488	.482	.495
25.0	30.1	37.6	22.6	.3	.0731	.497	.548	.515	.515	.448	.515	.481	.481	.521	.501	.488	.481	.475	.488
26.0	29.8	37.1	22.4	.3	.0754	.497	.540	.506	.506	.438	.506	.472	.492	.533	.506	.499	.485	.478	.499
27.0	29.7	36.9	22.4	.2	.0385	.497	.523	.489	.489	.489	.489	.489	.482	.537	.496	.496	.503	.482	.496
28.0	29.4	36.5	22.3	.4	.0789	.497	.514	.479	.479	.479	.479	.514	.493	.528	.507	.500	.507	.486	.493
29.0	29.3	36.2	22.2	.2	.0404	.497	.532	.532	.461	.461	.461	.497	.482	.547	.490	.504	.504	.475	.511
30.0	29.1	36.0	22.1	.2	.0411	.497	.548	.512	.512	.440	.512	.476	.483	.526	.504	.497	.476	.476	.497
31.0	29.0	35.8	22.1	.2	.0418	.497	.533	.496	.496	.460	.496	.496	.474	.533	.503	.489	.503	.474	.503
32.0	28.7	35.3	22.0	.4	.0857	.497	.514	.551	.477	.477	.477	.514	.477	.521	.492	.499	.484	.469	.507
33.0	28.5	35.1	21.9	.2	.0440	.497	.565	.543	.468	.468	.468	.565	.483	.521	.505	.498	.498	.483	.513
34.0	28.4	34.9	21.8	.2	.0447	.497	.565	.527	.488	.450	.450	.488	.473	.527	.496	.504	.488	.481	.519

Table 37A — Scaling Run 60, Test Configuration 6: Three 2.54-cm Nozzles

t (s)	Press Tank P (atm)	T_t (K)	Chamber P (atm)	Chamber Absolute Temperatures (K) at Locations 1												
				1	2	3	4	5	6	7	8	9	10	11	12	13
-5	***	***	1.024	295.2	294.2	294.2	295.2	295.2	295.2	293.8	292.5	292.4	293.6	293.7	293.5	293.4
-4	***	***	1.024	295.2	294.2	294.2	295.2	295.2	295.2	293.8	292.6	292.3	293.7	293.6	293.5	293.3
-3	***	***	1.025	295.2	294.2	294.2	295.2	295.2	295.2	293.7	292.6	292.4	293.5	293.8	293.5	293.4
-2	***	***	1.024	295.2	294.2	294.2	295.2	295.2	295.2	293.8	292.6	292.3	293.7	293.6	293.5	293.4
-1	***	***	1.025	295.2	294.2	294.2	295.2	295.2	295.2	293.7	292.7	292.3	293.5	293.7	293.5	293.3
0	6.315	293.2	1.024	295.2	294.2	294.2	295.2	295.2	295.2	293.8	292.5	292.3	293.7	293.5	293.5	293.4
1	6.294	293.2	1.025	295.2	294.2	294.2	294.2	295.2	295.2	293.6	292.6	292.3	293.6	293.7	293.5	293.3
2	5.956	287.2	1.173	298.7	298.2	296.2	297.2	298.2	298.7	298.3	300.0	298.9	300.5	299.7	298.9	298.3
3	5.231	273.2	1.466	308.2	306.2	304.2	305.2	306.2	306.2	306.6	307.6	305.4	308.1	307.5	307.1	306.4
4	4.543	271.2	1.706	311.2	310.7	309.2	309.2	310.7	310.2	310.9	310.0	308.9	311.5	311.1	310.5	309.8
5	3.999	269.2	1.919	313.2	313.2	312.2	311.2	312.2	312.2	312.3	311.6	310.9	312.8	312.6	312.0	311.5
6	3.503	268.2	2.094	313.2	313.2	312.2	312.2	312.2	312.2	312.3	311.2	310.7	312.9	312.4	312.3	312.1
7	3.310	272.2	2.168	312.7	312.7	312.7	312.2	312.7	312.2	312.0	310.6	310.2	311.6	311.7	311.6	311.5
8	3.364	275.2	2.159	312.2	312.2	312.2	311.2	311.2	311.2	311.2	310.0	309.8	311.2	311.0	311.0	311.0
9	***	***	2.150	311.2	311.2	311.2	311.2	311.2	311.2	311.0	309.9	309.7	311.0	310.7	310.3	310.3
10	***	***	2.146	311.2	311.2	311.2	311.2	311.2	311.2	310.9	309.7	309.5	310.6	310.7	310.3	310.1
11	***	***	2.142	311.2	311.2	311.2	311.2	311.2	311.2	310.5	309.4	309.3	310.7	310.2	310.0	309.9
12	***	***	2.139	311.2	311.2	311.2	311.2	311.2	311.2	310.5	309.1	309.1	310.2	310.2	310.0	309.5
13	***	***	2.136	310.2	311.2	311.2	311.2	311.2	311.2	309.9	308.7	308.9	310.0	310.0	309.7	309.6
14	***	***	2.133	310.2	310.2	310.2	310.7	310.2	310.7	309.7	308.5	308.4	309.6	309.5	309.4	309.5
15	***	***	2.131	310.2	310.2	310.2	310.2	310.2	310.2	309.6	308.3	308.2	309.4	309.3	309.0	309.2
16	***	***	2.128	310.2	310.2	310.2	310.2	310.2	310.2	309.3	308.3	308.0	308.8	308.9	308.6	308.7
21	***	***	2.110	309.2	309.2	309.2	309.2	309.2	309.2	308.1	306.8	306.7	307.5	307.9	307.6	307.4
26	***	***	2.110	307.2	307.2	307.7	308.2	307.7	308.2	307.0	305.8	305.3	306.6	306.7	306.5	306.4
31	***	***	2.103	306.2	306.2	306.2	307.2	306.7	307.2	305.9	304.7	304.5	305.8	305.8	305.7	305.6
36	***	***	2.097	305.2	305.2	305.2	306.2	306.2	306.2	304.9	303.8	303.4	304.8	305.0	304.6	304.6
41	***	***	2.092	304.2	304.2	305.2	305.2	305.2	305.2	304.0	302.8	302.7	303.9	304.2	303.8	303.9
46	***	***	2.087	304.2	304.2	304.2	304.2	304.2	305.2	303.3	302.0	301.9	303.1	303.2	303.1	303.0
51	***	***	2.084	303.2	303.2	303.2	304.2	304.2	304.2	302.9	301.5	301.2	302.4	302.7	302.5	302.4
56	***	***	2.080	303.2	303.2	303.2	303.2	303.2	303.2	302.1	300.9	300.4	302.0	302.4	302.0	301.9
61	***	***	2.077	302.2	302.2	302.2	303.2	303.2	303.2	301.5	300.3	299.9	301.4	301.9	301.5	301.4
66	***	***	2.074	302.2	302.2	302.2	302.2	302.2	302.2	301.0	300.0	299.6	300.7	301.5	301.2	301.0
76	***	***	2.069	301.2	301.2	301.2	302.2	302.2	302.2	300.2	299.1	298.8	300.2	300.4	300.2	300.3
86	***	***	2.065	301.2	300.2	300.7	301.2	301.2	301.2	299.7	298.7	298.3	299.5	299.8	299.5	299.5
96	***	***	2.061	300.2	300.2	300.2	300.2	300.2	300.2	299.0	298.0	297.9	299.0	299.1	299.0	298.8
106	***	***	2.059	300.2	299.2	299.2	300.2	300.2	300.2	298.6	297.5	297.4	298.4	298.8	298.6	298.6
116	***	***	2.055	299.2	299.2	299.2	299.2	299.2	299.2	298.1	297.2	296.8	298.2	298.2	298.1	298.1
126	***	***	2.053	299.2	299.2	299.2	299.2	299.2	299.2	297.8	296.9	296.5	297.9	298.0	297.7	297.6
136	***	***	2.051	298.2	298.2	298.2	298.2	299.2	299.2	297.5	296.5	296.4	297.5	297.6	297.5	297.4
146	***	***	2.049	298.2	298.2	298.2	298.2	298.2	298.2	297.4	296.3	296.0	297.3	297.4	297.2	297.1
156	***	***	2.047	298.2	298.2	298.2	298.2	298.2	298.2	297.2	296.0	295.9	297.2	297.2	297.0	296.9
166	***	***	2.046	298.2	298.2	298.2	298.2	298.2	298.2	296.9	296.0	295.6	296.8	296.9	296.8	296.7
176	***	***	2.045	298.2	298.2	298.2	298.2	298.2	298.2	296.8	295.8	295.5	296.7	296.9	296.7	296.6
186	***	***	2.043	298.2	298.2	297.2	297.2	298.2	298.2	296.7	295.5	295.5	296.6	296.5	296.5	296.4

COORDINATES

I	R (M)	THETA (DEG)	Z (M)
1	0.457	45	-0.152
2	0.457	45	-0.076
3	0.457	45	0.0
4	0.457	45	0.076
5	0.457	45	0.152
6	0.457	45	0.229
7	0.457	45	0.530
8	0.457	45	0.610
9	0.457	45	0.687
10	0.457	45	0.762
11	0.457	45	0.838
12	0.457	45	0.914
13	0.457	45	0.991

Table 37B — Inferred Pressurant Distribution, Scaling Run 60, Test Configuration 6: Three 2.54-cm Nozzles

t (s)	$\bar{T}$ (°C)	$\bar{T}_s$ (°C)	$\bar{T}_p$ (°C)	β	β/θ	$\bar{X}$	Pressurant Fractions (X) at Locations I 1	2	3	4	5	6	7	8	9	10	11	12	13
CONMENCE VALVE OPENING																			
0.0	20.8	20.8	87.7	.1	0.0000	0.000	0.000	0.000	0.000	0.000	0.000	0.000	0.000	0.000	0.000	0.000	0.000	0.000	
1.0	20.7	20.8	20.0	33.1	.0426	.124	.000	.000	.000	1.230	.000	.000	.248	.000	.000	.124	-.124	.000	.124
VALVE FULLY OPEN																			
2.0	25.4	25.7	22.9	77.7	9.2362	.113	.493	.319	1.015	1.015	.667	.493	.146	-.863	-.585	-.655	-.411	-.168	.006
3.0	33.3	36.8	24.0	14.4	2.8234	.272	.235	.313	.468	.468	.390	.390	.250	.079	.227	.125	.164	.188	.235
4.0	37.1	44.2	24.8	7.9	1.1007	.367	.382	.356	.433	.485	.407	.433	.325	.309	.351	.289	.304	.330	.361
CONMENCE VALVE CLOSURE																			
5.0	38.9	48.9	25.9	7.3	.8187	.433	.439	.396	.439	.526	.483	.483	.418	.396	.413	.392	.396	.418	.435
6.0	39.0	50.7	26.4	571.9	.7534	.481	.490	.449	.490	.531	.531	.531	.469	.465	.473	.445	.457	.457	.461
VALVE FULLY CLOSED																			
7.0	38.7	50.7	26.6	286.9	.3780	.499	.514	.473	.473	.535	.514	.535	.485	.494	.498	.498	.489	.489	.489
8.0	37.4	48.8	26.0	142.7	.1879	.499	.507	.463	.463	.551	.551	.551	.489	.489	.485	.485	.489	.485	.480
9.0	36.1	46.8	25.3	154.3	.2032	.499	.535	.488	.488	.535	.535	.535	.479	.474	.470	.474	.484	.498	.493
10.0	35.5	45.9	25.1	72.9	.0960	.499	.532	.484	.484	.532	.532	.532	.479	.479	.474	.489	.479	.493	.498
11.0	34.9	45.1	24.8	75.7	.0998	.499	.526	.477	.477	.526	.526	.526	.492	.487	.477	.477	.492	.502	.502
12.0	34.5	44.4	24.6	58.9	.0776	.499	.521	.471	.471	.521	.521	.521	.486	.496	.481	.496	.491	.496	.516
13.0	34.1	43.7	24.4	60.7	.0800	.499	.562	.459	.459	.510	.510	.510	.505	.505	.490	.495	.490	.500	.500
14.0	33.6	43.1	24.2	62.8	.0827	.499	.538	.486	.486	.512	.538	.512	.491	.491	.480	.491	.491	.491	.480
15.0	33.4	42.6	24.0	43.0	.0567	.499	.528	.475	.475	.528	.528	.528	.485	.491	.480	.491	.491	.501	.485
16.0	32.9	42.0	23.8	66.4	.0875	.499	.519	.464	.464	.519	.519	.519	.491	.480	.480	.513	.502	.513	.502
17.0	32.6	41.5	23.7	45.6	.0601	.499	.513	.457	.457	.513	.513	.513	.490	.490	.474	.513	.507	.530	.518
18.0	32.2	40.9	23.5	70.5	.0929	.499	.499	.499	.441	.499	.499	.499	.493	.499	.487	.493	.522	.534	.522
19.0	32.1	40.6	23.4	24.1	.0317	.499	.543	.485	.485	.485	.485	.485	.485	.496	.479	.502	.598	.531	.520
20.0	31.8	40.2	23.3	49.2	.0648	.499	.524	.464	.464	.524	.524	.524	.482	.500	.464	.506	.494	.506	.512
21.0	31.5	39.7	23.2	50.5	.0665	.499	.515	.455	.455	.515	.515	.515	.497	.503	.491	.503	.497	.509	.515
22.0	31.2	39.3	23.1	51.8	.0683	.499	.506	.444	.444	.506	.506	.506	.506	.506	.493	.536	.493	.518	.524
23.0	30.9	38.8	22.9	53.3	.0702	.499	.545	.483	.451	.483	.545	.483	.483	.501	.489	.514	.495	.508	.508
24.0	30.8	38.6	22.9	27.2	.0358	.499	.529	.466	.466	.466	.529	.529	.498	.491	.498	.504	.485	.517	.510
25.0	30.6	38.4	22.8	27.6	.0364	.499	.519	.455	.455	.519	.519	.519	.493	.499	.480	.525	.493	.499	.512
26.0	30.3	37.9	22.7	56.5	.0744	.499	.562	.496	.463	.496	.529	.496	.483	.483	.496	.503	.489	.496	.496
27.0	30.2	37.7	22.6	28.9	.0380	.499	.552	.485	.485	.485	.552	.485	.485	.492	.472	.512	.492	.492	.498
28.0	29.8	37.0	22.5	89.4	.1177	.499	.540	.472	.472	.506	.540	.506	.499	.485	.485	.506	.478	.499	.499
29.0	29.8	37.0	22.5	0.0	0.0000	.499	.588	.519	.450	.519	.519	.519	.478	.485	.471	.498	.478	.478	.485
30.0	29.5	36.6	22.3	62.0	.0816	.499	.580	.510	.439	.510	.510	.510	.496	.489	.489	.503	.475	.489	.489
31.0	29.3	36.3	22.3	31.8	.0419	.499	.568	.497	.497	.497	.532	.497	.490	.490	.483	.490	.483	.483	.483
32.0	29.2	36.1	22.2	32.3	.0426	.499	.558	.486	.486	.486	.558	.486	.486	.500	.471	.514	.479	.486	.493
33.0	28.9	35.7	22.1	66.3	.0874	.499	.576	.465	.465	.539	.539	.539	.487	.472	.480	.502	.465	.480	.480
34.0	28.8	35.4	22.1	34.1	.0449	.499	.602	.452	.452	.527	.527	.527	.490	.505	.482	.490	.482	.475	.475

XXX

Table 38A — Scaling Run 61, Test Configuration 5: Two 2.54-cm Nozzles

t (s)	Press Tank P (atm)	T_t (K)	Chamber P (atm)	Chamber Absolute Temperatures (K) at Locations I 1	2	3	4	5	6	7	8	9	10	11	12	13
-5	***	***	1.023	297.2	297.2	297.2	297.2	297.2	297.2	296.0	295.1	294.6	295.9	296.0	295.9	295.7
-4	***	***	1.022	297.2	297.2	297.2	297.2	297.2	297.2	296.3	295.0	294.7	296.0	296.0	295.9	295.8
-3	***	***	1.023	297.2	297.2	297.2	297.2	297.2	297.2	296.2	295.2	294.7	295.9	296.0	295.9	295.8
-2	***	***	1.022	297.2	297.2	297.2	297.2	297.2	297.2	296.2	295.1	294.6	296.1	296.0	295.8	295.7
-1	***	***	1.023	297.2	297.2	297.2	297.2	297.2	297.2	296.2	295.1	294.8	296.0	296.0	295.9	295.8
0	6.303	296.2	1.023	297.2	297.2	297.2	297.2	297.2	297.2	296.1	295.2	294.6	296.1	296.0	295.8	295.7
1	6.244	296.7	1.036	297.2	297.2	297.2	297.2	297.2	297.2	296.4	296.5	295.8	296.7	296.7	296.3	295.9
2	5.843	284.2	1.195	302.2	301.2	299.2	300.2	302.2	302.2	300.9	302.0	301.0	303.9	303.1	302.5	301.5
3	5.286	277.2	1.397	306.2	305.2	304.2	304.2	306.2	306.2	306.3	306.4	305.5	308.6	308.2	307.9	307.5
4	4.827	274.2	1.579	310.2	309.2	308.7	308.7	310.2	309.7	309.3	309.5	308.8	311.6	311.0	310.7	310.2
5	4.384	273.2	1.736	312.2	311.2	311.2	311.2	312.2	312.2	311.1	310.9	310.7	312.7	312.2	312.0	311.5
6	4.017	271.7	1.879	313.2	312.7	312.7	312.7	313.2	312.7	312.1	311.6	311.3	312.9	313.1	312.7	312.2
7	3.689	271.2	2.008	313.2	313.2	313.2	313.2	314.2	313.2	312.7	312.0	311.6	313.4	313.1	312.9	312.5
8	3.397	270.2	2.112	313.2	313.2	313.2	313.2	314.2	314.2	312.6	311.7	311.5	312.8	312.8	312.6	312.3
9	3.421	272.2	2.107	312.7	312.7	313.2	313.2	313.2	313.2	312.0	311.1	310.9	312.3	312.1	311.8	311.5
10	3.394	274.2	2.101	311.2	312.2	312.2	312.2	312.2	312.2	311.7	310.6	310.6	311.6	311.6	311.6	311.3
11	***	***	2.096	311.2	311.7	311.7	312.2	312.2	312.2	311.3	310.3	310.2	311.5	311.5	311.1	311.0
12	***	***	2.093	311.2	311.2	311.2	311.2	311.2	312.2	311.2	310.0	310.0	311.3	310.9	310.9	310.7
13	***	***	2.090	310.7	311.2	311.2	311.2	311.2	311.2	310.8	309.7	309.5	310.7	310.7	310.6	310.3
14	***	***	2.087	310.2	310.2	311.2	311.2	311.2	311.2	310.3	309.5	309.0	310.4	310.4	310.1	309.9
15	***	***	2.085	310.2	310.2	310.2	311.2	311.2	311.2	310.3	309.2	309.0	310.2	310.0	309.8	309.6
16	***	***	2.083	310.2	310.2	310.2	311.2	311.2	311.2	310.2	309.0	308.7	309.8	309.8	309.4	309.2
17	***	***	2.081	310.2	310.2	310.2	311.2	311.2	311.2	310.0	308.8	308.5	309.7	309.6	309.2	309.0
18	***	***	2.079	310.2	310.2	310.2	310.2	310.2	310.7	309.6	308.5	308.3	309.4	309.4	308.9	308.7
23	***	***	2.071	309.2	309.2	309.2	309.2	309.2	309.7	308.4	307.5	307.1	308.5	308.4	308.0	307.8
28	***	***	2.065	308.2	308.2	308.2	308.7	308.2	308.7	307.5	306.5	306.4	307.7	307.5	307.1	306.8
33	***	***	2.060	307.2	307.2	307.2	307.2	307.2	308.2	306.8	305.9	305.9	306.6	307.0	306.6	306.3
38	***	***	2.055	306.2	306.2	306.2	306.2	306.2	306.7	305.9	304.9	304.6	305.9	306.1	305.8	305.7
43	***	***	2.051	305.2	305.2	305.2	306.2	305.2	306.2	305.1	304.0	303.9	304.9	305.5	305.2	304.9
48	***	***	2.047	305.2	305.2	305.2	305.2	305.2	305.2	304.5	303.5	303.3	304.2	304.7	304.4	304.2
53	***	***	2.045	305.2	305.2	305.2	305.2	305.2	305.2	304.1	303.1	302.7	304.0	304.0	303.9	303.7
58	***	***	2.041	304.2	304.2	304.2	304.2	304.2	305.2	303.7	302.5	302.5	303.5	303.7	303.5	303.2
63	***	***	2.038	304.2	304.2	304.2	304.2	304.2	304.2	303.1	302.2	301.8	303.0	303.4	303.0	302.9
68	***	***	2.036	303.2	303.2	303.2	304.2	303.2	304.2	302.9	301.7	301.3	302.5	303.1	302.7	302.4
78	***	***	2.032	303.2	303.2	303.2	303.2	303.2	303.2	302.1	300.9	300.6	301.7	302.4	302.1	301.8
88	***	***	2.028	302.2	302.2	302.2	302.2	302.2	302.2	301.3	300.3	300.0	301.2	301.5	301.2	301.1
98	***	***	2.025	302.2	302.2	302.2	302.2	302.2	302.2	300.9	299.8	299.6	300.9	300.9	300.9	300.6
108	***	***	2.021	301.2	301.2	301.2	301.2	301.2	302.2	300.4	299.4	299.3	300.4	300.4	300.2	300.2
118	***	***	2.018	301.2	301.2	301.2	301.2	301.2	301.2	300.0	299.2	298.7	300.0	300.2	299.9	299.8
128	***	***	2.017	301.2	301.2	301.2	301.2	301.2	301.2	299.8	298.9	298.6	299.7	299.8	299.6	299.5
138	***	***	2.015	300.2	300.2	300.2	300.2	300.2	300.2	299.5	298.6	298.3	299.5	299.5	299.5	299.3
148	***	***	2.013	300.2	300.2	300.2	300.2	300.2	300.2	299.3	298.4	298.1	299.3	299.3	299.1	299.1
158	***	***	2.012	300.2	300.2	300.2	300.2	300.2	300.2	299.3	298.2	298.1	298.9	299.3	299.0	298.8
168	***	***	2.011	300.2	300.2	300.2	300.2	300.2	300.2	299.2	298.1	297.8	299.0	299.1	298.8	298.8
178	***	***	2.009	300.2	300.2	300.2	300.2	300.2	300.2	298.9	298.0	297.7	298.8	298.8	298.8	298.7
188	***	***	2.008	300.2	299.2	299.2	299.2	300.2	300.2	298.9	297.8	297.5	298.7	298.7	298.6	298.5

COORDINATES

I	R (M)	THETA (DEG)	Z (M)
1	0.457	45	-0.152
2	0.457	45	-0.076
3	0.457	45	0.0
4	0.457	45	0.076
5	0.457	45	0.152
6	0.457	45	0.229
7	0.457	45	0.530
8	0.457	45	0.610
9	0.457	45	0.687
10	0.457	45	0.762
11	0.457	45	0.838
12	0.457	45	0.914
13	0.457	45	0.991

Table 38B — Inferred Pressurant Distribution, Scaling Run 61, Test Configuration 5: Two 2.54-cm Nozzles

t (s)	$\bar{T}$ (°C)	$\bar{T}_a$ (°C)	$\bar{T}_p$ (°C)	β	β/θ	$\bar{X}$	Pressurant Fractions (X) at Locations I 1	2	3	4	5	6	7	8	9	10	11	12	13
CONMENCE VALVE OPENING																			
0.0	23.2	23.2	76.9	.9	0.0000	0.000	0.000	0.000	0.000	0.000	0.000	0.000	0.000	0.000	0.000	0.000	0.000	0.000	
1.0	23.5	23.5	23.5	1199.7	13.6870	.012	6.261	6.261	6.261	6.261	6.261	6.261	1.076	-16.21	-12.75	-4.109	-5.838	-2.381	2.804
VALVE FULLY OPEN																			
2.0	28.5	29.0	24.8	59.6	7.5046	.129	.208	.442	.911	.676	.208	.208	.255	-.214	-.120	-.448	-.284	-.191	.020
3.0	33.2	35.9	24.7	18.2	2.5624	.243	.331	.421	.510	.510	.331	.331	.225	.135	.162	.020	.046	.055	.082
4.0	36.6	41.9	25.7	9.9	1.1026	.323	.352	.413	.444	.444	.352	.383	.339	.271	.278	.197	.228	.234	.259
5.0	38.4	45.7	26.6	9.1	.8079	.380	.394	.447	.447	.447	.394	.394	.394	.358	.337	.311	.337	.331	.352
6.0	39.3	48.2	27.4	9.1	.6943	.426	.435	.459	.459	.459	.435	.459	.435	.415	.401	.396	.382	.391	.411
CONMENCE VALVE CLOSURE																			
7.0	39.8	49.8	28.0	9.3	.6057	.462	.489	.489	.489	.489	.443	.489	.462	.452	.443	.430	.439	.439	.452
8.0	39.7	50.5	28.4	45.0	.5162	.489	.512	.512	.512	.512	.467	.467	.490	.490	.472	.481	.476	.476	.485
VALVE FULLY CLOSED																			
9.0	39.1	49.6	28.1	7.4	.0849	.488	.509	.509	.486	.486	.486	.486	.490	.490	.472	.476	.481	.486	.495
10.0	38.2	48.3	27.6	12.5	.1435	.488	.550	.501	.501	.501	.501	.501	.472	.482	.453	.477	.472	.463	.472
11.0	37.5	47.2	27.3	11.0	.1262	.488	.540	.515	.515	.490	.490	.490	.480	.485	.460	.470	.465	.475	.475
12.0	37.0	46.5	27.1	6.9	.0789	.488	.522	.522	.522	.522	.522	.471	.465	.481	.450	.460	.476	.465	.471
13.0	36.6	45.9	26.8	7.1	.0815	.488	.532	.505	.505	.505	.505	.505	.469	.479	.458	.474	.474	.463	.474
14.0	36.1	45.2	26.6	7.3	.0843	.488	.543	.543	.489	.489	.489	.489	.478	.473	.467	.473	.467	.473	.478
15.0	35.8	44.8	26.5	5.0	.0578	.488	.533	.533	.533	.478	.478	.478	.467	.478	.456	.473	.478	.478	.484
16.0	35.5	44.3	26.4	5.2	.0591	.488	.525	.525	.525	.470	.470	.470	.464	.481	.464	.486	.481	.492	.497
17.0	35.2	43.9	26.2	5.3	.0606	.488	.520	.520	.520	.463	.463	.463	.469	.486	.469	.486	.486	.498	.503
18.0	34.9	43.4	26.1	5.4	.0621	.488	.501	.501	.501	.501	.501	.472	.472	.483	.460	.483	.478	.495	.501
19.0	34.7	43.0	26.0	5.5	.0636	.488	.541	.541	.482	.482	.482	.482	.459	.488	.453	.476	.488	.488	.488
20.0	34.5	42.7	25.9	2.8	.0325	.488	.534	.534	.475	.475	.475	.475	.469	.481	.457	.487	.487	.493	.505
21.0	34.2	42.3	25.8	5.8	.0662	.488	.526	.526	.526	.466	.466	.466	.478	.478	.459	.490	.478	.490	.502
22.0	33.9	41.8	25.6	5.9	.0680	.488	.516	.516	.516	.454	.516	.454	.473	.491	.454	.485	.485	.491	.497
23.0	33.8	41.6	25.6	3.0	.0347	.488	.501	.501	.501	.501	.501	.470	.483	.483	.470	.476	.476	.489	.495
24.0	33.6	41.4	25.5	3.1	.0352	.488	.547	.547	.484	.484	.484	.484	.465	.478	.453	.478	.471	.478	.497
25.0	33.5	41.1	25.4	3.1	.0357	.488	.538	.538	.506	.474	.474	.474	.468	.487	.449	.474	.487	.474	.506
26.0	33.3	40.9	25.4	3.2	.0362	.488	.529	.529	.529	.465	.465	.465	.478	.484	.459	.478	.472	.491	.504
27.0	33.0	40.5	25.2	6.5	.0740	.488	.519	.519	.519	.453	.519	.453	.473	.493	.447	.480	.480	.486	.506
28.0	32.9	40.2	25.2	3.3	.0379	.488	.509	.509	.509	.476	.509	.476	.482	.489	.456	.469	.476	.489	.502
29.0	32.7	40.0	25.1	3.4	.0385	.488	.562	.495	.495	.495	.495	.495	.481	.481	.441	.481	.454	.474	.501
30.0	32.6	39.8	25.0	3.4	.0390	.488	.550	.550	.516	.482	.482	.482	.475	.475	.448	.462	.462	.475	.489
31.0	32.4	39.5	25.0	3.5	.0397	.488	.543	.543	.543	.475	.475	.475	.481	.481	.440	.488	.454	.468	.481
32.0	32.3	39.3	24.9	3.5	.0403	.488	.533	.533	.533	.464	.533	.464	.478	.478	.443	.471	.464	.471	.485
33.0	32.1	39.1	24.9	3.6	.0410	.488	.524	.524	.524	.524	.524	.454	.475	.475	.433	.489	.454	.468	.482
34.0	32.0	38.9	24.8	3.6	.0416	.488	.570	.506	.506	.506	.506	.506	.471	.478	.449	.464	.449	.457	.471

Table 39A — Scaling Run 62, Test Configuration 5: Two 2.54-cm Nozzles

(s)	From Tank P (atm)	T_0 (K)	Chamber P (atm)	Chamber Absolute Temperatures (K) at Locations 1												
				1	2	3	4	5	6	7	8	9	10	11	12	13
-5	***	***	1.023	297.2	297.2	297.2	297.2	297.2	273.2	296.1	295.0	294.7	295.7	295.8	295.6	295.6
-4	***	***	1.023	297.2	297.2	297.2	297.2	297.2	273.2	296.0	295.0	294.6	295.8	295.8	295.7	295.5
-3	***	***	1.023	297.2	297.2	297.2	297.2	297.2	273.2	296.0	295.1	294.6	295.6	295.9	295.7	295.5
-2	***	***	1.023	297.2	297.2	297.2	297.2	297.2	273.2	296.0	295.0	294.7	295.7	295.8	295.7	295.5
-1	***	***	1.023	297.2	297.2	297.2	297.2	297.2	273.2	296.0	295.0	294.8	295.6	295.9	295.6	295.6
0	6.292	296.2	1.023	297.2	297.2	297.2	297.2	297.2	273.2	296.0	295.0	294.6	295.8	295.8	295.7	295.5
1	6.266	296.2	1.023	297.2	297.2	297.2	297.2	297.2	273.2	296.1	295.2	294.8	295.7	295.9	295.7	295.6
2	5.917	292.2	1.180	301.2	299.7	299.2	299.7	300.7	273.2	300.8	301.9	301.0	303.1	302.3	301.8	300.5
3	5.295	276.2	1.389	308.2	306.2	305.2	306.2	308.2	273.2	305.8	306.6	306.0	308.7	308.7	308.1	307.0
4	4.858	273.7	1.568	310.7	310.2	309.2	309.2	310.7	273.2	309.2	309.4	309.0	311.5	311.0	310.8	310.0
5	4.407	272.2	1.729	312.2	311.2	311.2	312.2	313.2	273.2	311.0	310.9	310.8	312.7	312.6	312.4	311.6
6	4.032	271.2	1.872	313.2	312.2	312.2	312.2	313.2	273.2	312.0	311.9	311.6	313.3	313.0	312.9	312.6
7	3.607	270.7	2.041	313.2	313.2	313.2	313.2	314.2	273.2	312.7	311.8	311.8	313.4	313.2	313.0	313.0
8	3.388	269.2	2.109	313.2	313.2	313.2	313.2	313.2	273.2	312.4	311.3	311.0	312.3	312.6	312.3	312.2
9	3.413	281.2	2.101	312.7	312.7	312.7	313.2	312.7	273.2	311.7	310.8	310.9	312.0	311.9	311.8	311.5
10	***	***	2.094	312.2	312.2	312.2	312.2	312.2	273.2	311.3	310.6	310.4	311.6	311.5	311.2	311.2
11	***	***	2.091	312.2	312.2	312.2	312.2	312.2	273.2	311.2	310.4	310.2	311.3	311.4	311.1	311.0
12	***	***	2.087	311.7	312.2	312.2	312.2	312.2	273.2	310.9	309.9	310.0	311.2	310.9	310.9	310.7
13	***	***	2.085	311.2	311.2	311.2	311.2	311.2	273.2	310.7	309.8	309.7	310.8	310.8	310.7	310.5
14	***	***	2.082	311.2	311.2	311.2	311.2	311.2	273.2	310.3	309.5	309.4	310.8	310.7	310.4	310.2
15	***	***	2.080	310.2	311.2	311.2	311.2	310.2	273.2	310.3	309.2	309.3	310.2	310.4	310.1	310.0
16	***	***	2.078	310.2	310.2	310.2	310.7	310.2	273.2	309.8	309.0	308.8	310.1	310.2	309.8	309.6
17	***	***	2.076	310.2	310.2	310.2	310.2	310.2	273.2	309.7	308.7	308.6	309.7	309.8	309.6	309.6
22	***	***	2.069	308.2	308.2	309.2	309.2	309.2	273.2	308.4	307.5	307.6	308.5	308.8	308.7	308.5
27	***	***	2.062	307.2	307.2	308.2	308.2	308.2	273.2	307.5	306.5	306.6	307.7	308.0	307.7	307.4
32	***	***	2.056	307.2	307.2	307.2	307.2	307.2	273.2	306.5	305.4	305.3	306.7	307.0	306.8	306.7
37	***	***	2.052	306.2	306.2	306.2	306.2	306.2	273.2	305.5	304.5	304.4	305.5	306.1	305.9	305.8
42	***	***	2.048	305.2	305.2	306.2	306.2	306.2	273.2	304.9	303.8	303.6	304.9	305.3	305.2	305.0
47	***	***	2.044	305.2	305.2	305.2	305.2	305.2	273.2	304.4	303.3	303.1	304.2	304.7	304.5	304.3
52	***	***	2.041	304.2	304.2	305.2	305.2	305.2	273.2	304.0	303.0	302.8	303.7	304.0	304.0	303.8
57	***	***	2.038	304.2	304.2	304.2	304.2	304.2	273.2	303.5	302.5	302.3	303.5	303.7	303.5	303.4
62	***	***	2.035	304.2	303.2	304.2	304.2	304.2	273.2	303.0	302.0	302.0	303.0	303.1	303.1	303.0
67	***	***	2.032	303.2	303.2	303.2	304.2	304.2	273.2	302.7	301.7	301.5	302.4	302.9	302.8	302.6
77	***	***	2.028	303.2	302.2	303.2	303.2	303.2	273.2	302.0	300.9	300.9	301.8	302.1	302.0	301.8
87	***	***	2.024	302.2	302.2	302.2	302.2	302.2	273.2	301.3	300.4	300.2	301.2	301.5	301.3	301.2
97	***	***	2.021	302.2	302.2	302.2	302.2	302.2	273.2	300.9	299.9	299.8	300.8	300.9	300.9	300.7
107	***	***	2.018	301.2	301.2	301.2	301.2	301.2	273.2	300.5	299.5	299.4	300.3	300.4	300.3	300.2
117	***	***	2.016	301.2	301.2	301.2	301.2	301.2	273.2	300.3	299.3	299.1	300.0	300.2	300.0	300.0
127	***	***	2.014	301.2	300.2	300.2	301.2	301.2	273.2	300.0	298.9	298.8	299.7	299.7	299.7	299.7
137	***	***	2.012	300.2	300.2	300.2	300.2	300.2	273.2	299.8	298.7	298.5	299.3	299.7	299.5	299.4
147	***	***	2.010	300.2	300.2	300.2	300.2	300.2	273.2	299.5	298.5	298.3	299.2	299.3	299.2	299.0
157	***	***	2.008	300.2	300.2	300.2	300.2	300.2	273.2	299.2	298.4	298.1	299.0	299.0	299.0	298.8
167	***	***	2.007	300.2	300.2	300.2	300.2	300.2	273.2	299.0	298.2	297.9	298.8	298.9	298.8	298.7
177	***	***	2.005	300.2	300.2	300.2	300.2	300.2	273.2	298.8	298.0	297.6	298.7	298.7	298.6	298.5
187	***	***	2.004	300.2	299.2	299.2	299.2	299.2	273.2	298.8	297.8	297.7	298.4	298.6	298.6	298.4

COORDINATES

I	R (M)	THETA (DEG)	Z (M)
1	0.457	45	-0.152
2	0.457	45	-0.076
3	0.457	45	0.0
4	0.457	45	0.076
5	0.457	45	0.152
6	0.457	45	0.229
7	0.457	45	0.530
8	0.457	45	0.610
9	0.457	45	0.687
10	0.457	45	0.762
11	0.457	45	0.838
12	0.457	45	0.914
13	0.457	45	0.991

Table 39B — Inferred Pressurant Distribution, Scaling Run 62, Test Configuration 5: Two 2.54-cm Nozzles

t (s)	$\bar{T}$ (°C)	$\bar{T}_a$ (°C)	$\bar{T}_c$ (°C)	β	β/θ	$\bar{X}$	Pressurant Fractions (X) at Locations I 1	2	3	4	5	6	7	8	9	10	11	12	13
COMMENCE VALVE OPENING																			
0.0	21.2	21.2	98.6	-.0	0.0000	0.000	0.000	0.000	0.000	0.000	0.000	0.000	0.000	0.000	0.000	0.000	0.000	0.000	
1.0	21.3	21.3	24.0	38451.2	-7.0319	-.000	-.020	-.020	-.020	-.020	-.020	-.020	.017	.017	.054	-.020	.054	-.020	.017
VALVE FULLY OPEN																			
2.0	25.7	25.0	24.6	89.0	11.4782	.120	.471	1.653	2.046	1.653	.865	3.621	-.159	-1.734	-1.497	-2.206	-1.576	-1.182	-.395
3.0	31.3	33.2	25.1	19.0	2.8562	.238	.121	.367	.491	.367	.121	1.478	.269	.059	.071	-.126	-.126	-.052	.059
4.0	34.0	38.3	24.8	11.9	1.3321	.319	.268	.306	.380	.380	.268	1.268	.291	.209	.202	.098	.135	.150	.194
5.0	35.7	41.9	25.4	10.4	.9581	.379	.345	.406	.406	.345	.285	1.256	.345	.297	.272	.224	.230	.242	.278
COMMENCE VALVE CLOSURE																			
6.0	36.3	44.0	26.0	10.7	.9249	.426	.374	.430	.430	.430	.374	1.263	.374	.330	.319	.285	.302	.308	.313
7.0	36.7	45.7	26.7	-4904.3	.8968	.472	.447	.447	.447	.447	.394	1.286	.410	.410	.384	.357	.368	.378	.368
VALVE FULLY CLOSED																			
8.0	36.3	45.5	26.6	-2496.7	.4547	.490	.440	.440	.440	.440	.440	1.287	.419	.430	.419	.409	.393	.409	.403
9.0	35.1	43.8	26.0	-1108.9	.2028	.490	.442	.442	.442	.414	.442	1.312	.431	.431	.397	.397	.402	.408	.414
10.0	34.1	42.3	25.5	-1049.9	.1920	.490	.442	.442	.442	.442	.442	1.332	.424	.413	.395	.389	.395	.413	.401
11.0	33.6	41.7	25.3	-476.2	.0871	.490	.435	.435	.435	.435	.435	1.348	.423	.417	.399	.399	.393	.411	.405
12.0	33.1	40.8	25.0	-661.7	.1210	.490	.452	.421	.421	.421	.421	1.366	.427	.433	.396	.389	.408	.408	.408
13.0	32.8	40.4	24.8	-343.3	.0628	.490	.434	.434	.434	.434	.434	1.353	.409	.409	.383	.383	.383	.390	.390
14.0	32.3	39.7	24.6	-531.7	.0972	.490	.444	.444	.444	.444	.444	1.369	.425	.418	.392	.372	.378	.398	.398
15.0	32.0	39.3	24.5	-366.4	.0670	.490	.491	.424	.424	.424	.491	1.367	.404	.417	.377	.390	.377	.397	.390
16.0	31.7	38.9	24.3	-376.3	.0688	.490	.466	.466	.466	.432	.466	1.359	.411	.405	.384	.370	.343	.391	.391
17.0	31.4	38.4	24.2	-387.1	.0708	.490	.455	.455	.455	.455	.455	1.366	.405	.412	.384	.384	.377	.391	.377
18.0	31.1	38.0	24.0	-398.4	.0729	.490	.445	.445	.445	.445	.445	1.376	.410	.424	.388	.403	.374	.388	.381
19.0	31.0	37.8	24.0	-203.5	.0372	.490	.491	.491	.455	.419	.455	1.360	.419	.412	.375	.375	.368	.375	.375
20.0	30.7	37.3	23.8	-416.7	.0762	.490	.475	.475	.475	.401	.475	1.363	.416	.416	.372	.372	.372	.387	.372
21.0	30.6	37.1	23.7	-213.1	.0390	.490	.460	.498	.460	.460	.460	1.358	.408	.408	.370	.378	.343	.378	.370
22.0	30.3	36.7	23.6	-436.7	.0798	.490	.518	.518	.441	.441	.441	1.360	.411	.411	.365	.380	.357	.365	.365
23.0	30.1	36.4	23.5	-223.5	.0409	.490	.510	.510	.433	.433	.433	1.363	.417	.410	.375	.375	.355	.375	.371
24.0	29.8	36.0	23.4	-458.4	.0838	.490	.489	.489	.489	.410	.489	1.362	.402	.417	.378	.362	.354	.370	.362
25.0	29.7	35.8	23.3	-235.2	.0430	.490	.477	.477	.477	.477	.477	1.361	.396	.412	.372	.364	.356	.364	.364
26.0	29.7	35.8	23.3	0.0	0.0000	.490	.500	.540	.460	.460	.460	1.344	.396	.420	.363	.355	.355	.363	.355
27.0	29.4	35.3	23.2	-482.8	.0883	.490	.529	.529	.446	.446	.446	1.354	.405	.413	.364	.364	.339	.364	.372
28.0	29.2	35.1	23.1	-247.8	.0453	.490	.522	.522	.438	.438	.438	1.357	.413	.413	.354	.388	.338	.371	.380
29.0	29.1	34.9	23.1	-252.6	.0462	.490	.507	.507	.507	.422	.422	1.354	.414	.414	.372	.372	.346	.363	.372
30.0	28.9	34.7	23.0	-257.3	.0470	.490	.485	.485	.485	.403	.485	1.347	.429	.420	.377	.369	.343	.369	.360
31.0	28.8	34.4	22.9	-262.2	.0479	.490	.477	.477	.477	.477	.477	1.347	.416	.425	.372	.372	.346	.355	.355
32.0	28.5	34.0	22.8	-539.8	.0987	.490	.463	.463	.463	.463	.463	1.359	.418	.436	.401	.374	.347	.365	.356
33.0	28.4	33.8	22.7	-278.4	.0509	.490	.445	.536	.445	.445	.445	1.354	.427	.427	.391	.391	.345	.364	.355
34.0	28.2	33.5	22.7	-284.0	.0519	.490	.525	.525	.433	.433	.433	1.355	.423	.433	.387	.377	.350	.350	.350

Table 40A — Scaling Run 63, Test Configuration 5: Two 2.54-cm Nozzles

t (s)	Press Tank P (atm)	T_t (K)	Chamber P (atm)	Chamber Absolute Temperatures (K) at Locations I 1	2	3	4	5	6	7	8	9	10	11	12	13
-5	***	***	1.022	296.2	296.2	296.2	296.2	296.2	296.2	295.2	294.3	294.0	295.2	295.0	295.0	294.8
-4	***	***	1.022	296.2	296.2	296.2	296.2	296.2	296.2	295.2	294.2	294.1	295.0	295.1	295.0	295.0
-3	***	***	1.022	296.2	296.2	296.2	296.2	296.2	296.2	295.2	294.4	294.0	295.0	295.0	295.0	294.9
-2	***	***	1.022	296.2	296.2	296.2	296.2	296.2	296.2	295.2	294.3	294.1	295.1	295.1	294.9	294.9
-1	***	***	1.022	296.2	296.2	296.2	296.2	296.2	296.2	295.2	294.4	294.0	295.1	295.1	295.0	294.9
0	6.301	296.2	1.022	296.2	296.2	296.2	296.2	296.2	296.2	295.2	294.3	294.1	295.1	295.0	295.0	294.7
1	6.206	298.7	1.047	296.7	296.7	296.2	296.2	296.7	297.2	295.8	296.3	295.7	296.7	296.4	296.0	295.5
2	5.768	280.2	1.225	302.2	301.2	299.2	300.2	302.2	302.2	301.2	302.6	302.0	304.1	303.3	302.7	301.7
3	5.240	276.2	1.423	307.2	305.2	304.2	304.2	306.2	306.2	306.8	307.3	306.5	309.0	308.4	308.3	307.4
4	4.721	273.7	1.579	310.2	309.2	308.2	309.2	310.2	309.7	309.7	309.8	309.3	311.3	311.1	310.6	310.0
5	4.343	272.2	1.754	312.2	311.2	311.2	311.2	312.2	311.2	311.1	311.0	310.7	312.5	312.3	312.2	311.5
6	3.937	270.7	1.894	313.2	312.2	312.7	312.2	313.2	312.7	312.1	311.8	311.5	312.7	312.6	312.6	312.4
7	3.647	270.2	2.022	313.2	313.2	313.2	313.2	313.2	313.2	312.3	311.6	311.5	313.0	312.6	312.5	311.9
8	3.370	270.2	2.118	312.7	312.7	313.2	313.2	313.2	313.2	312.3	311.2	311.1	312.1	312.2	312.1	312.0
9	3.285	282.2	2.110	312.2	312.2	312.2	312.2	312.2	312.2	311.5	310.5	310.5	311.5	311.4	311.3	311.1
10	3.390	283.2	2.103	311.2	312.2	312.2	312.2	312.2	312.2	311.0	310.2	310.0	311.0	311.1	310.7	310.5
11	***	***	2.099	311.2	311.2	311.7	311.7	311.7	311.7	310.5	309.5	309.7	310.7	310.9	310.7	310.4
12	***	***	2.096	311.2	311.2	311.2	311.2	311.2	311.2	309.8	309.1	309.4	310.4	310.7	310.2	310.0
13	***	***	2.093	310.2	310.7	310.7	311.2	310.7	311.2	309.5	308.8	309.0	310.3	310.2	310.1	309.7
14	***	***	2.090	310.2	310.2	310.2	310.2	310.2	310.2	309.3	308.4	308.7	309.6	310.0	309.9	309.5
15	***	***	2.087	310.2	310.2	310.2	310.2	310.2	310.2	309.0	308.2	308.2	309.6	309.7	309.5	309.2
16	***	***	2.085	310.2	310.2	310.2	310.2	310.2	310.2	309.0	308.0	308.2	309.2	309.3	309.2	308.9
17	***	***	2.084	309.2	310.2	310.2	310.2	310.2	310.2	308.7	308.0	307.8	308.8	308.9	308.8	308.7
18	***	***	2.082	309.2	309.7	309.7	310.2	310.2	310.2	308.5	307.6	307.6	308.6	308.8	308.7	308.5
23	***	***	2.075	308.2	308.2	309.2	309.2	309.2	309.2	307.1	306.6	306.4	307.4	307.7	307.4	307.3
28	***	***	2.069	307.2	307.2	307.2	308.2	308.2	308.2	306.5	305.5	305.4	306.3	306.6	306.6	306.3
33	***	***	2.063	306.2	306.2	307.2	307.2	307.2	307.2	305.7	304.8	304.5	305.3	305.9	305.7	305.4
38	***	***	2.059	306.2	306.2	306.2	306.2	306.2	306.2	304.9	304.1	303.9	304.8	305.0	304.9	304.7
43	***	***	2.055	305.2	305.2	305.2	305.2	305.2	305.2	304.2	303.3	303.1	304.0	304.5	304.2	304.0
48	***	***	2.051	304.2	305.2	305.2	305.2	305.2	305.2	303.8	302.7	302.4	303.6	303.7	303.6	303.5
53	***	***	2.049	304.2	304.2	304.2	304.2	304.2	305.2	303.3	302.4	302.2	303.1	303.3	303.1	303.0
58	***	***	2.046	304.2	304.2	304.2	304.2	304.2	304.2	303.0	302.1	301.9	302.6	302.8	302.7	302.6
63	***	***	2.043	303.2	303.2	303.2	304.2	304.2	304.2	302.5	301.6	301.2	302.3	302.5	302.3	302.2
68	***	***	2.040	303.2	303.2	303.2	303.2	303.2	303.2	302.1	301.0	301.0	301.8	301.9	301.9	301.7
78	***	***	2.036	302.2	302.2	302.2	302.2	302.2	303.2	301.4	300.5	300.3	301.0	301.4	301.2	301.0
88	***	***	2.032	302.2	302.2	302.2	302.2	302.2	302.2	300.6	299.9	299.5	300.5	300.7	300.6	300.4
98	***	***	2.028	301.2	301.2	301.2	302.2	301.7	301.7	300.3	299.4	299.3	300.0	300.2	300.2	299.9
108	***	***	2.026	301.2	301.2	301.2	301.2	301.2	301.2	299.9	298.9	298.8	299.6	299.9	299.7	299.5
118	***	***	2.023	300.2	300.2	300.2	301.2	300.2	301.2	299.5	298.7	298.5	299.4	299.5	299.4	299.2
128	***	***	2.021	300.2	300.2	300.2	300.2	300.2	300.2	299.2	298.2	298.2	299.1	299.1	299.0	298.8
138	***	***	2.019	300.2	300.2	300.2	300.2	300.2	300.2	299.0	298.1	298.0	298.9	298.8	298.8	298.6
148	***	***	2.017	300.2	300.2	300.2	300.2	300.2	300.2	298.7	297.9	297.6	298.7	298.7	298.6	298.4
158	***	***	2.016	300.2	299.7	300.2	300.2	299.7	300.2	298.5	297.7	297.5	298.4	298.4	298.4	298.2
168	***	***	2.014	299.2	299.2	299.2	299.2	299.2	299.2	298.4	297.5	297.4	298.2	298.3	298.1	298.0
178	***	***	2.012	299.2	299.2	299.2	299.2	299.2	299.2	298.2	297.3	297.3	298.1	298.1	298.0	298.0
188	***	***	2.012	299.2	299.2	299.2	299.2	299.2	299.2	298.1	297.1	297.2	298.0	297.8	297.8	297.7

COORDINATES

I	R (M)	THETA (DEG)	Z (M)
1	0.457	45	-0.152
2	0.457	45	-0.076
3	0.457	45	0.0
4	0.457	45	0.076
5	0.457	45	0.152
6	0.457	45	0.229
7	0.457	45	0.530
8	0.457	45	0.610
9	0.457	45	0.687
10	0.457	45	0.762
11	0.457	45	0.838
12	0.457	45	0.914
13	0.457	45	0.991

Table 40B — Inferred Pressurant Distribution, Scaling Run 63, Test Configuration 5: Two 2.54-cm Nozzles

t (s)	$\bar{T}$ (°C)	$\bar{T}_s$ (°C)	$\bar{T}_p$ (°C)	β	β/θ	$\bar{X}$	Pressurant Fractions (X) at Locations I 1	2	3	4	5	6	7	8	9	10	11	12	13
COMMENCE VALVE OPENING																			
0.0	22.2	22.2	63.1	1.3	0.0000	0.000	0.000	0.000	0.000	0.000	0.000	0.000	0.000	0.000	0.000	0.000	0.000	0.000	
1.0	23.1	23.1	24.3	439.1	9.2872	.021	-.320	-.320	-.754	-.754	-.320	.114	-.233	.983	.636	.636	.462	.201	-.059
VALVE FULLY OPEN																			
2.0	28.7	29.5	24.4	44.6	6.1553	.147	.241	.438	.832	.635	.241	.241	.241	-.211	-.133	-.349	-.211	-.093	.044
3.0	33.5	36.8	23.8	14.0	1.8701	.234	.274	.428	.506	.506	.351	.351	.228	.120	.166	.050	.089	.096	.143
4.0	36.7	42.4	25.0	9.0	.9597	.330	.356	.413	.470	.413	.356	.384	.327	.270	.287	.230	.235	.264	.281
5.0	38.4	46.2	26.0	8.5	.7405	.386	.392	.442	.442	.442	.392	.442	.397	.358	.368	.323	.328	.333	.353
6.0	39.3	48.7	26.7	8.5	.6248	.429	.430	.476	.453	.476	.430	.453	.435	.408	.412	.403	.403	.403	.398
COMMENCE VALVE CLOSURE																			
7.0	39.5	50.1	27.2	9.2	.5938	.465	.475	.475	.475	.475	.475	.475	.471	.462	.458	.436	.449	.453	.466
8.0	39.2	50.4	27.5	23.0	.4921	.490	.510	.510	.488	.488	.488	.488	.484	.493	.488	.488	.480	.484	.475
VALVE FULLY CLOSED																			
9.0	38.4	49.3	27.1	4.9	.1040	.489	.497	.497	.497	.497	.497	.497	.484	.488	.479	.479	.479	.484	.479
10.0	37.4	47.7	26.6	7.7	.1650	.489	.529	.482	.482	.482	.482	.482	.492	.487	.487	.487	.477	.496	.492
11.0	36.8	46.8	26.3	4.7	.0994	.489	.512	.512	.487	.487	.487	.487	.497	.502	.482	.482	.468	.477	.477
12.0	36.3	46.2	26.1	3.6	.0772	.489	.494	.494	.494	.494	.494	.494	.514	.504	.479	.479	.459	.484	.479
13.0	35.9	45.5	25.9	3.7	.0797	.489	.527	.502	.502	.476	.502	.476	.512	.502	.481	.466	.466	.471	.476
14.0	35.5	44.8	25.7	3.9	.0823	.489	.505	.505	.505	.505	.505	.505	.500	.500	.474	.479	.453	.458	.463
15.0	35.0	44.2	25.5	4.0	.0852	.489	.497	.497	.497	.497	.497	.497	.508	.503	.492	.471	.460	.471	.471
16.0	34.7	43.7	25.3	2.7	.0584	.489	.491	.491	.491	.491	.491	.491	.502	.507	.485	.485	.474	.480	.480
17.0	34.6	43.5	25.3	1.4	.0297	.489	.533	.478	.478	.478	.478	.478	.505	.494	.494	.494	.483	.489	.478
18.0	34.3	43.0	25.1	2.8	.0606	.489	.523	.495	.495	.467	.467	.467	.506	.506	.495	.495	.478	.484	.478
19.0	34.1	42.8	25.1	1.4	.0308	.489	.502	.502	.502	.502	.502	.446	.502	.508	.480	.485	.480	.480	.468
20.0	33.8	42.4	24.9	2.9	.0628	.489	.490	.490	.490	.490	.490	.490	.496	.508	.490	.490	.479	.479	.473
21.0	33.7	42.1	24.9	1.5	.0320	.489	.537	.479	.479	.479	.479	.479	.502	.508	.491	.502	.468	.479	.474
22.0	33.4	41.7	24.7	3.1	.0653	.489	.527	.527	.468	.468	.468	.468	.510	.510	.492	.492	.474	.480	.474
23.0	33.2	41.5	24.7	1.6	.0333	.489	.519	.519	.459	.459	.459	.459	.525	.501	.501	.501	.477	.495	.483
24.0	33.1	41.2	24.6	1.6	.0337	.489	.500	.500	.500	.500	.500	.440	.500	.500	.488	.500	.470	.482	.482
25.0	32.8	40.8	24.5	3.2	.0689	.489	.489	.489	.489	.489	.489	.458	.507	.513	.489	.501	.482	.482	.482
26.0	32.7	40.5	24.4	1.6	.0352	.489	.481	.481	.481	.481	.481	.481	.506	.506	.494	.512	.475	.488	.488
27.0	32.5	40.3	24.4	1.7	.0357	.489	.470	.532	.470	.470	.470	.470	.507	.507	.495	.514	.476	.489	.489
28.0	32.4	40.1	24.3	1.7	.0362	.489	.517	.517	.517	.454	.454	.454	.498	.505	.498	.505	.479	.479	.479
29.0	32.1	39.6	24.2	3.5	.0740	.489	.511	.511	.511	.446	.446	.446	.511	.511	.504	.511	.472	.491	.491
30.0	32.1	39.6	24.2	0.0	0.0000	.489	.498	.498	.498	.465	.498	.433	.504	.511	.491	.511	.485	.485	.485
31.0	31.8	39.2	24.0	3.6	.0762	.489	.483	.483	.483	.483	.483	.483	.503	.496	.509	.509	.470	.490	.483
32.0	31.6	38.9	24.0	1.8	.0390	.489	.478	.478	.478	.478	.478	.478	.498	.511	.511	.518	.484	.484	.484
33.0	31.5	38.7	23.9	1.9	.0396	.489	.530	.530	.463	.463	.463	.463	.496	.496	.503	.517	.469	.483	.483
34.0	31.3	38.5	23.9	1.9	.0403	.489	.525	.525	.457	.457	.457	.457	.491	.505	.498	.519	.484	.491	.491

XXX

Table 41A — Scaling Run 64, Test Configuration 4: One 2.54-cm Nozzle

t (s)	From Tank P (atm)	T_s (K)	Chamber P (atm)	Chamber Absolute Temperatures (K) at Locations I: 1	2	3	4	5	6	7	8	9	10	11	12	13
-5	***	***	1.021	296.2	296.2	296.2	296.2	296.2	296.2	295.0	294.1	293.9	295.0	294.8	294.8	294.6
-4	***	***	1.022	296.2	296.2	296.2	296.2	296.2	296.2	295.0	294.2	293.9	294.9	294.9	294.7	294.6
-3	***	***	1.021	296.2	296.2	296.2	296.2	296.2	296.2	295.0	294.2	293.8	294.9	294.8	294.7	294.5
-2	***	***	1.021	296.2	296.2	296.2	296.2	296.2	296.2	295.0	294.2	294.0	294.8	294.9	294.8	294.6
-1	***	***	1.022	296.2	296.2	296.2	296.2	296.2	296.2	294.9	294.2	293.8	295.0	294.8	294.7	294.6
0	6.282	296.2	1.022	296.2	296.2	296.2	296.2	296.2	296.2	295.0	294.4	294.0	294.9	294.9	294.7	294.6
1	6.137	309.2	1.603	298.2	297.2	296.2	297.2	298.2	298.2	296.7	297.2	296.2	297.5	297.2	296.9	296.4
2	5.790	277.7	1.191	302.2	301.7	300.7	301.2	301.7	302.2	300.8	300.5	299.5	301.0	300.5	300.4	300.0
3	5.510	276.2	1.291	305.2	304.2	304.2	304.2	304.2	305.2	303.6	303.0	302.0	303.5	303.0	303.0	302.7
4	5.289	275.2	1.384	306.2	305.2	305.2	305.2	306.2	306.2	305.1	304.3	303.5	304.9	304.4	304.3	304.2
5	5.084	274.7	1.471	307.2	306.7	306.7	306.7	307.2	307.2	305.9	305.1	304.5	305.7	305.5	305.2	305.2
6	4.812	273.2	1.553	308.2	307.2	307.2	307.2	308.2	308.2	306.4	305.5	305.0	305.9	305.8	305.7	305.5
7	4.596	273.2	1.631	308.2	308.2	308.2	308.2	308.2	308.2	306.7	305.5	305.3	306.4	305.9	305.9	305.8
8	4.394	272.2	1.704	308.2	308.2	308.2	308.2	308.2	308.2	306.7	305.8	305.3	306.1	306.1	305.9	305.9
9	4.166	272.2	1.776	308.2	308.2	308.2	308.2	308.2	308.2	306.8	305.5	305.3	306.1	305.9	305.9	305.9
10	4.030	271.2	1.842	308.2	308.2	308.2	308.2	308.2	308.2	306.6	305.7	305.2	306.1	305.9	305.8	305.8
11	3.818	271.2	1.906	308.2	308.2	308.2	308.2	308.2	308.2	306.6	305.2	305.2	305.8	305.7	305.7	305.7
12	3.707	271.2	1.968	307.7	307.7	308.2	308.2	308.2	308.2	306.4	305.3	304.9	305.8	305.6	305.6	305.6
13	3.533	270.2	2.036	307.2	307.2	307.2	307.2	307.2	307.2	305.9	304.9	304.7	305.5	305.4	305.2	305.2
14	3.492	264.2	2.041	307.2	307.2	307.2	307.2	307.2	307.2	305.2	304.5	304.3	305.2	305.0	305.0	305.0
15	3.520	269.7	2.037	306.7	306.7	306.7	306.7	306.7	306.7	305.2	304.4	304.1	304.9	304.9	304.7	304.7
16	***	***	2.034	306.2	306.2	306.2	306.2	306.2	306.2	305.0	304.0	303.9	304.6	304.5	304.5	304.5
17	***	***	2.032	306.2	306.2	306.2	306.2	306.2	306.2	304.7	303.7	303.5	304.3	304.4	304.3	304.4
18	***	***	2.030	305.2	306.2	306.2	306.2	305.2	306.2	304.4	303.5	303.2	304.1	304.0	304.1	304.2
19	***	***	2.028	305.2	305.2	305.2	305.2	305.2	305.2	304.2	303.3	303.2	303.8	303.9	303.9	304.0
20	***	***	2.027	305.2	305.2	305.2	305.2	305.2	305.2	304.0	302.1	302.9	303.8	303.8	303.8	303.8
21	***	***	2.025	305.2	305.2	305.2	305.2	305.2	305.2	303.9	303.0	302.8	303.5	303.7	303.5	303.7
22	***	***	2.024	305.2	305.2	305.2	305.2	305.2	305.2	303.8	302.7	302.7	303.3	303.4	303.5	303.5
23	***	***	2.023	304.2	305.2	305.2	305.2	305.2	305.2	303.6	302.6	302.4	303.1	303.4	303.3	303.1
28	***	***	2.018	304.2	304.2	304.2	304.2	304.2	304.2	302.9	301.8	301.8	302.6	302.6	302.5	302.4
33	***	***	2.015	303.2	303.2	303.2	303.2	303.2	303.2	302.3	301.4	301.2	302.2	302.3	302.0	301.8
38	***	***	2.012	302.2	302.2	303.2	303.2	303.2	303.2	301.9	301.0	300.9	301.6	301.9	301.6	301.4
43	***	***	2.009	302.2	302.2	302.2	302.2	302.2	302.2	301.2	300.4	300.1	301.4	301.3	301.2	300.9
48	***	***	2.007	302.2	302.2	302.2	302.2	302.2	302.2	300.9	300.0	299.9	300.7	300.9	300.8	300.5
53	***	***	2.004	302.2	302.2	302.2	302.2	302.2	302.2	300.5	299.7	299.5	300.3	300.5	300.4	300.2
58	***	***	2.002	301.2	301.2	301.2	302.2	302.2	302.2	300.2	299.5	299.3	300.2	300.2	300.2	299.9
63	***	***	2.000	301.2	301.2	301.2	301.2	301.2	301.2	300.0	299.2	299.0	299.9	300.2	300.0	299.9
68	***	***	1.999	301.2	301.2	301.2	301.2	301.2	301.2	299.8	299.1	298.8	299.5	299.9	299.7	299.5
73	***	***	1.997	301.2	300.2	301.2	301.2	301.2	301.2	299.6	298.8	298.7	299.3	299.6	299.5	299.3
83	***	***	1.994	300.2	300.2	300.2	300.2	300.2	300.2	299.1	298.4	298.2	299.0	299.2	299.0	298.8
93	***	***	1.992	300.2	300.2	300.2	300.2	300.2	300.2	298.8	298.0	297.9	298.8	298.7	298.7	298.6
103	***	***	1.989	300.2	300.2	299.7	300.2	300.2	300.2	298.5	297.8	297.6	298.5	298.6	298.4	298.3
113	***	***	1.988	299.2	299.2	299.2	299.2	299.2	299.2	298.4	297.6	297.4	298.2	298.3	298.1	298.0
123	***	***	1.986	299.2	299.2	299.2	299.2	299.2	299.2	298.1	297.3	297.3	298.0	298.0	297.8	297.8
133	***	***	1.984	299.2	299.2	299.2	299.2	299.2	299.2	297.9	297.2	297.0	297.7	297.9	297.7	297.6
143	***	***	1.983	299.2	299.2	299.2	299.2	299.2	299.2	297.8	297.0	296.8	297.5	297.7	297.5	297.5
153	***	***	1.981	299.2	299.2	299.2	299.2	299.2	299.2	297.5	296.8	296.7	297.5	297.5	297.4	297.3
163	***	***	1.980	299.2	299.2	299.2	299.2	299.2	299.2	297.5	296.7	296.6	297.4	297.4	297.3	297.2
173	***	***	1.979	298.2	298.2	298.2	298.2	298.2	298.2	297.4	296.6	296.5	297.3	297.3	297.2	297.1
183	***	***	1.978	298.2	298.2	298.2	298.2	298.2	298.2	297.3	296.4	296.4	297.3	297.1	297.1	296.9

COORDINATES

I	R (M)	THETA (DEG)	Z (M)
1	0.457	45	-0.152
2	0.457	45	-0.076
3	0.457	45	0.0
4	0.457	45	0.076
5	0.457	45	0.152
6	0.457	45	0.229
7	0.457	45	0.330
8	0.457	45	0.610
9	0.457	45	0.687
10	0.457	45	0.762
11	0.457	45	0.838
12	0.457	45	0.914
13	0.457	45	0.991

Table 41B — Inferred Pressurant Distribution, Scaling Run 64, Test Configuration 4: One 2.54-cm Nozzle

t (s)	$\bar{T}$ (°C)	$\bar{T}_s$ (°C)	$\bar{T}_p$ (°C)	β	β/θ	$\bar{X}$	1	2	3	4	5	6	7	8	9	10	11	12	13
							Pressurant Fractions (X) at Locations 1												
COMMENCE VALVE OPENING																			
0.0	22.2	22.2	71.9	3.8	0.0000	0.000	0.000	0.000	0.000	0.000	0.000	0.000	0.000	0.000	0.000	0.000	0.000	0.000	
1.0	24.0	23.7	29.5	256.3	13.2894	.051	.084	-.088	-.260	-.088	.084	.084	.032	.221	.101	.187	.135	.118	.049
VALVE FULLY OPEN																			
2.0	27.8	28.1	25.5	44.5	3.6619	.126	-.033	.162	.551	.356	.162	-.033	.084	-.111	.201	-.111	.123	.084	.201
3.0	30.5	32.3	22.6	17.0	1.2147	.186	.116	.219	.219	.219	.219	.116	.158	.158	.230	.158	.209	.188	.209
4.0	31.8	34.7	22.3	17.2	1.1223	.238	.207	.288	.288	.288	.207	.207	.199	.215	.255	.207	.247	.239	.239
5.0	32.9	36.8	22.8	15.0	.8596	.280	.258	.294	.294	.294	.258	.258	.265	.280	.301	.272	.287	.294	.287
6.0	33.4	38.1	23.3	15.2	.7961	.317	.266	.333	.333	.333	.266	.266	.306	.327	.340	.333	.340	.333	.340
7.0	33.8	39.1	23.8	14.9	.7127	.349	.323	.323	.323	.323	.323	.323	.343	.382	.375	.356	.388	.375	.375
8.0	33.8	39.6	24.2	16.0	.6983	.377	.353	.353	.353	.353	.353	.353	.372	.392	.405	.405	.405	.405	.398
9.0	33.8	39.9	24.6	16.1	.6681	.402	.376	.376	.376	.376	.376	.376	.389	.435	.428	.428	.441	.428	.421
10.0	33.7	40.2	24.9	16.0	.5841	.423	.396	.396	.396	.396	.396	.396	.422	.442	.455	.448	.461	.455	.448
11.0	33.7	40.4	25.2	16.4	.5636	.443	.409	.409	.409	.409	.409	.409	.435	.488	.468	.482	.488	.475	.468
COMMENCE VALVE CLOSURE																			
12.0	33.5	40.4	25.5	16.8	.5462	.461	.451	.451	.417	.417	.417	.417	.458	.491	.498	.491	.505	.491	.485
13.0	33.0	39.8	25.6	13.4	.7135	.480	.465	.465	.465	.465	.465	.465	.472	.500	.493	.493	.500	.500	.493
VALVE FULLY CLOSED																			
14.0	32.8	39.5	25.5	1.8	.0962	.481	.452	.452	.452	.452	.452	.452	.309	.516	.509	.502	.516	.502	.494
15.0	32.2	38.6	25.2	2.7	.1457	.481	.463	.463	.463	.463	.463	.463	.485	.500	.500	.500	.500	.500	.493
16.0	31.7	38.0	25.0	2.2	.1152	.481	.472	.472	.472	.472	.472	.472	.472	.503	.487	.495	.503	.487	.480
17.0	31.4	37.5	24.8	1.5	.0798	.481	.461	.461	.461	.461	.461	.461	.485	.516	.509	.509	.501	.493	.477
18.0	31.1	37.1	24.7	1.5	.0825	.481	.518	.437	.437	.437	.518	.437	.486	.510	.510	.502	.510	.486	.470
19.0	30.8	36.6	24.5	1.6	.0853	.481	.486	.486	.486	.486	.486	.486	.469	.494	.478	.494	.486	.469	.453
20.0	30.7	36.4	24.5	.8	.0438	.481	.479	.479	.479	.479	.479	.479	.479	.504	.495	.487	.487	.470	.462
21.0	30.4	36.0	24.3	1.7	.0899	.481	.472	.472	.472	.472	.472	.472	.481	.506	.498	.506	.489	.481	.463
22.0	30.2	35.7	24.3	.9	.0462	.481	.463	.463	.463	.463	.463	.463	.481	.524	.498	.516	.507	.481	.472
23.0	30.1	35.5	24.2	.9	.0471	.481	.534	.446	.446	.446	.446	.446	.481	.517	.508	.517	.490	.490	.490
24.0	29.9	35.3	24.1	.9	.0480	.481	.512	.512	.468	.423	.468	.468	.468	.512	.494	.494	.494	.477	.468
25.0	29.8	35.1	24.0	.9	.0489	.481	.489	.489	.489	.489	.489	.489	.480	.489	.489	.480	.471	.462	.453
26.0	29.6	34.8	24.0	.9	.0499	.481	.482	.482	.482	.482	.482	.482	.473	.491	.482	.500	.473	.473	.473
27.0	29.5	34.6	23.9	1.0	.0509	.481	.476	.476	.476	.476	.476	.476	.467	.504	.476	.495	.495	.476	.486
28.0	29.3	34.4	23.8	1.0	.0520	.481	.467	.467	.467	.467	.467	.467	.476	.524	.495	.495	.495	.486	.486
29.0	29.3	34.4	23.8	0.0	0.0000	.481	.457	.505	.457	.457	.457	.457	.486	.514	.505	.495	.486	.486	.495
30.0	29.2	34.2	23.8	1.0	.0530	.481	.526	.526	.526	.429	.526	.429	.458	.487	.487	.478	.458	.458	.468
31.0	29.0	33.9	23.7	1.0	.0543	.481	.513	.513	.513	.513	.513	.415	.454	.493	.474	.474	.464	.454	.464
32.0	28.9	33.7	23.6	1.0	.0554	.481	.507	.507	.507	.507	.507	.407	.467	.507	.477	.467	.467	.457	.477
33.0	28.9	33.7	23.6	0.0	0.0000	.481	.494	.494	.494	.494	.494	.494	.464	.494	.484	.464	.455	.455	.474
34.0	28.7	33.5	23.6	1.1	.0567	.481	.490	.490	.490	.490	.490	.490	.460	.500	.480	.480	.460	.460	.480

Table 42A — Scaling Run 65, Test Configuration 4: One 2.54-cm Nozzle

t (s)	Press Tank P (atm)	T_i (K)	Chamber P (atm)	Chamber Absolute Temperatures (K) at Locations I 1	2	3	4	5	6	7	8	9	10	11	12	13
-5	***	***	1.036	295.2	295.2	295.2	295.2	295.2	295.2	293.5	293.1	292.5	293.5	293.5	293.5	293.2
-4	***	***	1.037	295.2	295.2	295.2	295.2	295.2	295.2	293.5	293.0	292.7	293.4	293.5	293.5	293.3
-3	***	***	1.036	295.2	295.2	295.2	295.2	295.2	295.2	293.5	292.9	292.6	293.4	293.4	293.5	293.1
-2	***	***	1.037	295.2	295.2	295.2	295.2	295.2	295.2	293.5	293.0	292.5	293.4	293.6	293.5	293.3
-1	***	***	1.036	295.2	295.2	295.2	295.2	295.2	295.2	293.5	292.9	292.7	293.5	293.4	293.5	293.2
0	6.308	295.2	1.037	295.2	295.2	295.2	295.2	295.2	295.2	293.5	293.0	292.5	293.4	293.5	293.5	293.3
1	6.304	295.2	1.037	295.2	295.2	295.2	295.2	295.2	295.2	293.6	293.0	292.7	293.4	293.5	293.5	293.3
2	6.117	295.2	1.104	298.2	297.7	296.7	297.7	297.7	298.7	295.7	296.3	295.3	296.4	296.0	296.0	295.5
3	5.608	276.2	1.249	302.2	302.2	300.2	301.2	302.2	302.2	300.6	300.5	299.4	300.8	300.4	300.4	300.0
4	5.418	275.2	1.346	304.2	303.2	303.2	303.2	304.2	304.2	303.1	302.6	301.5	302.5	302.5	302.4	302.2
5	5.179	274.2	1.435	305.7	305.2	304.7	305.7	305.7	305.7	304.3	303.6	302.8	303.9	303.5	303.6	303.4
6	4.963	273.2	1.520	307.2	306.2	306.2	306.2	307.2	307.2	304.8	304.4	303.3	304.5	304.4	304.4	304.2
7	4.735	273.2	1.600	307.2	307.2	306.7	307.2	307.2	307.2	305.4	304.7	304.0	304.9	304.7	304.7	304.5
8	4.495	272.2	1.677	307.2	307.2	307.2	307.2	307.2	307.2	305.6	304.6	304.2	304.8	304.9	304.9	304.6
9	4.343	271.7	1.749	307.2	307.2	307.2	307.2	307.2	307.2	305.4	304.7	304.0	304.9	304.8	304.7	304.7
10	4.110	271.2	1.820	307.2	307.2	307.2	307.2	307.2	307.2	305.5	304.7	304.2	305.1	304.8	304.9	304.7
11	3.957	271.2	1.886	307.2	307.2	307.2	307.2	307.2	307.2	305.5	304.5	304.3	304.8	304.8	304.8	304.7
12	3.823	270.2	1.949	307.2	307.2	307.2	307.2	307.2	307.2	305.2	304.5	303.9	304.6	304.6	304.5	304.5
13	3.624	270.2	2.010	307.2	307.2	307.2	307.2	307.2	307.2	305.1	304.1	303.9	304.5	304.5	304.5	304.5
14	3.367	267.7	2.045	306.7	306.7	307.2	307.2	307.2	307.2	304.7	303.8	303.4	303.9	304.0	304.0	303.9
15	3.378	268.2	2.038	306.2	306.2	306.2	306.2	306.2	306.2	304.3	303.7	303.2	304.0	304.0	303.9	303.6
16	***	***	2.035	306.2	306.2	306.2	306.2	306.2	306.2	303.9	303.1	303.1	303.8	303.7	303.8	303.5
17	***	***	2.032	305.2	305.7	305.7	305.7	305.2	305.2	303.6	303.2	302.9	303.6	303.5	303.4	303.2
18	***	***	2.030	305.2	305.2	305.2	305.2	305.2	305.2	303.5	302.9	302.6	303.1	303.3	303.2	303.1
19	***	***	2.028	305.2	305.2	305.2	305.2	305.2	305.2	303.1	302.5	302.3	303.0	303.0	303.0	302.7
20	***	***	2.026	305.2	305.2	305.2	305.2	305.2	305.2	302.8	302.3	301.8	302.9	302.8	302.7	302.6
21	***	***	2.025	305.2	305.2	304.2	305.2	305.2	305.2	302.7	[illegible]	301.7	302.5	302.5	302.7	302.5
22	***	***	2.024	304.2	304.2	304.2	304.7	304.2	304.2	302.5	302.0	301.8	302.4	302.4	302.5	302.3
23	***	***	2.022	304.2	304.2	304.2	304.2	304.2	304.2	302.3	301.8	301.6	302.4	302.2	302.3	302.1
28	***	***	2.017	303.2	303.2	303.2	304.2	303.2	304.2	301.7	301.0	300.6	301.2	301.5	301.4	301.2
33	***	***	2.013	303.2	303.2	303.2	303.2	303.2	303.2	301.0	300.4	300.3	300.8	300.9	300.3	300.6
38	***	***	2.010	302.2	302.2	302.2	302.2	302.2	302.2	300.5	299.9	299.5	300.3	300.4	300.3	300.0
43	***	***	2.007	302.2	302.2	302.2	302.2	302.2	302.2	300.0	299.3	299.2	299.9	299.9	300.0	299.7
48	***	***	2.004	301.2	301.2	301.2	301.2	301.2	302.2	299.6	299.1	298.7	299.3	299.7	299.6	299.3
53	***	***	2.002	301.2	301.2	301.2	301.2	301.2	301.2	299.5	298.8	298.5	299.0	299.4	299.2	298.9
58	***	***	2.000	301.2	300.2	300.2	301.2	301.2	301.2	299.1	298.4	298.1	298.9	299.0	299.0	298.7
63	***	***	1.999	300.2	300.2	300.2	300.2	300.2	301.2	298.8	298.2	297.9	298.5	298.7	298.7	298.4
68	***	***	1.997	300.2	300.2	300.2	300.2	300.2	300.2	298.5	298.0	297.5	298.1	298.6	298.4	298.1
73	***	***	1.995	300.2	300.2	300.2	300.2	300.2	300.2	298.2	297.7	297.3	298.0	298.1	298.1	297.9
83	***	***	1.992	300.2	299.2	300.2	300.2	300.2	300.2	298.0	297.3	297.0	297.6	297.9	297.8	297.6
93	***	***	1.990	299.2	299.2	299.2	299.2	299.2	299.2	297.5	297.0	296.7	297.5	297.5	297.5	297.3
103	***	***	1.988	299.2	299.2	299.2	299.2	299.2	299.2	297.4	296.8	296.4	297.2	297.3	297.3	297.0
113	***	***	1.986	299.2	299.2	299.2	299.2	299.2	299.2	297.1	296.5	296.1	296.9	297.0	296.9	296.7
123	***	***	1.985	299.2	298.2	298.2	299.2	299.2	299.2	296.8	296.2	295.9	296.6	296.7	296.7	296.5
133	***	***	1.983	298.2	298.2	298.2	298.2	298.2	298.2	296.6	296.0	295.7	296.3	296.7	296.5	296.3
143	***	***	1.981	298.2	298.2	298.2	298.2	298.2	298.2	296.4	295.8	295.4	296.3	296.3	296.3	296.1
153	***	***	1.980	298.2	298.2	298.2	298.2	298.2	298.2	296.2	295.6	295.4	296.2	296.0	296.2	295.9
163	***	***	1.979	298.2	298.2	298.2	298.2	298.2	298.2	295.9	295.5	295.1	295.9	296.0	296.0	295.8
173	***	***	1.977	298.2	298.2	298.2	298.2	298.2	298.2	296.0	295.4	295.1	295.9	295.9	295.9	295.7
183	***	***	1.977	298.2	297.2	297.7	298.2	298.2	298.2	295.8	295.4	294.9	295.7	295.8	295.8	295.5

COORDINATES

I	R (M)	THETA (DEG)	Z (M)
1	0.457	45	-0.152
2	0.457	45	-0.076
3	0.457	45	0.0
4	0.457	45	0.076
5	0.457	45	0.152
6	0.457	45	0.229
7	0.457	45	0.530
8	0.457	45	0.610
9	0.457	45	0.687
10	0.457	45	0.762
11	0.457	45	0.838
12	0.457	45	0.914
13	0.457	45	0.991

Table 42B — Inferred Pressurant Distribution, Scaling Run 65, Test Configuration 4: One 2.54-cm Nozzle

t (s)	$\bar{T}$ (°C)	$\bar{T}_c$ (°C)	$\bar{T}_p$ (°C)	β	β/θ	$\bar{X}$	1	2	3	4	5	6	7	8	9	10	11	12	13
						Pressurant Fractions (X) at Locations I													
COMMENCE VALVE OPENING																			
0.0	20.9	20.9	127.2	-.0	0.0000	0.000	0.000	0.000	0.000	0.000	0.000	0.000	0.000	0.000	0.000	0.000	0.000	0.000	
1.0	21.0	21.0	23.0	88999.1	-7.0094	-.000	-.011	-.011	-.011	-.011	-.011	-.011	.037	-.011	.037	-.011	-.011	-.011	.037
VALVE FULLY OPEN																			
2.0	23.6	23.6	23.2	132.0	7.1037	.052	-1.029	.377	3.188	.377	.377	-2.435	1.220	-1.873	-.186	-1.029	.377	.377	.939
3.0	27.8	28.7	22.2	33.3	3.6383	.151	.121	.121	.430	.275	.121	.121	.103	.028	.152	.059	.136	.136	.152
4.0	29.8	32.1	21.1	17.6	1.1551	.206	.196	.287	.287	.287	.196	.196	.141	.141	.205	.150	.196	.205	.196
5.0	31.2	34.6	21.4	14.9	.8845	.252	.236	.274	.312	.236	.236	.236	.221	.229	.259	.236	.274	.267	.259
6.0	32.2	36.5	21.9	14.1	.7645	.292	.241	.309	.309	.309	.241	.241	.288	.282	.330	.302	.316	.316	.309
7.0	32.6	37.6	22.4	14.9	.7441	.326	.305	.305	.338	.305	.305	.305	.311	.325	.344	.338	.358	.358	.344
8.0	32.7	38.2	22.8	15.8	.7385	.357	.341	.341	.341	.341	.341	.341	.335	.367	.367	.380	.380	.380	.380
9.0	32.7	38.6	23.2	16.0	.6753	.383	.366	.366	.366	.366	.366	.366	.373	.386	.399	.399	.412	.419	.399
10.0	32.7	39.0	23.7	15.5	.6147	.407	.393	.393	.393	.393	.393	.393	.393	.413	.419	.413	.439	.433	.426
11.0	32.7	39.2	24.0	15.9	.5685	.428	.412	.412	.412	.412	.412	.412	.412	.438	.431	.451	.464	.458	.444
COMMENCE VALVE CLOSURE																			
12.0	32.6	39.3	24.3	16.4	.5468	.447	.422	.422	.422	.422	.422	.422	.442	.455	.468	.475	.482	.488	.468
13.0	32.5	39.4	24.5	-6273.2	.4940	.464	.435	.435	.435	.435	.435	.435	.462	.496	.482	.489	.503	.503	.482
VALVE FULLY CLOSED																			
14.0	32.2	39.1	24.5	-4597.9	.3621	.474	.455	.455	.421	.421	.421	.421	.476	.503	.503	.524	.524	.524	.510
15.0	31.1	37.6	24.0	-3098.9	.2441	.474	.457	.457	.457	.457	.457	.457	.471	.479	.486	.486	.493	.501	.501
16.0	30.7	36.9	23.8	-1427.8	.1124	.474	.445	.445	.445	.445	.445	.445	.491	.514	.484	.491	.506	.499	.499
17.0	30.2	36.2	23.6	-1494.6	.1177	.474	.487	.447	.447	.447	.487	.487	.479	.471	.463	.471	.487	.495	.487
18.0	29.9	35.8	23.4	-1037.2	.0817	.474	.467	.467	.467	.467	.467	.467	.467	.475	.467	.492	.483	.492	.475
19.0	29.6	35.4	23.3	-1072.5	.0845	.474	.454	.454	.454	.454	.454	.454	.488	.496	.479	.479	.496	.496	.496
20.0	29.3	34.9	23.1	-1109.7	.0874	.474	.442	.442	.442	.442	.442	.442	.502	.502	.510	.485	.502	.510	.493
21.0	29.2	34.7	23.1	-569.7	.0449	.474	.429	.429	.515	.429	.429	.429	.497	.497	.506	.506	.506	.497	.489
22.0	29.0	34.5	23.0	-580.1	.0457	.474	.478	.478	.478	.435	.478	.478	.478	.478	.461	.478	.487	.478	.470
23.0	28.7	34.0	22.9	-1193.4	.0940	.474	.466	.466	.466	.466	.466	.466	.493	.484	.466	.466	.493	.484	.475
24.0	28.6	33.8	22.8	-614.0	.0484	.474	.455	.455	.455	.455	.455	.455	.492	.474	.483	.492	.501	.501	.483
25.0	28.4	33.6	22.7	-626.1	.0493	.474	.454	.454	.454	.454	.454	.454	.473	.491	.482	.500	.491	.500	.491
26.0	28.3	33.4	22.7	-638.4	.0503	.474	.440	.440	.440	.440	.440	.440	.486	.514	.486	.505	.524	.505	.496
27.0	28.1	33.1	22.6	-651.8	.0513	.474	.421	.516	.421	.421	.421	.421	.497	.497	.506	.506	.506	.516	.506
28.0	28.0	32.9	22.5	-664.9	.0524	.474	.488	.488	.488	.391	.488	.391	.468	.488	.488	.507	.488	.497	.488
29.0	28.0	32.9	22.5	0.0	0.0000	.474	.469	.469	.469	.469	.469	.421	.459	.479	.450	.508	.498	.508	.488
30.0	27.7	32.5	22.4	-1374.4	.1082	.474	.460	.460	.460	.460	.460	.460	.470	.480	.470	.490	.490	.509	.490
31.0	27.7	32.5	22.4	0.0	0.0000	.474	.454	.454	.454	.454	.454	.454	.474	.474	.474	.504	.494	.514	.494
32.0	27.5	32.2	22.3	-709.9	.0559	.474	.447	.447	.447	.447	.447	.447	.487	.487	.488	.498	.498	.508	.508
33.0	27.4	32.0	22.3	-726.4	.0572	.474	.444	.444	.444	.444	.444	.444	.495	.505	.474	.505	.505	.505	.505
34.0	27.2	31.8	22.2	-743.1	.0585	.474	.484	.432	.432	.432	.432	.432	.494	.515	.494	.494	.494	.515	.505

Table 43A -- Scaling Run 66, Test Configuration 4: One 2.54-cm Nozzle

t (s)	Press Tank P (atm)	T_t (K)	Chamber P (atm)	Chamber Absolute Temperatures (K) at Locations I: 1	2	3	4	5	6	7	8	9	10	11	12	13
-5	***	***	1.022	295.2	295.2	295.2	295.2	295.2	295.2	293.4	292.9	292.6	293.3	293.2	293.2	293.1
-4	***	***	1.022	295.2	295.2	295.2	295.2	295.2	295.2	293.4	292.9	292.4	293.3	293.3	293.2	293.0
-3	***	***	1.022	295.2	295.2	295.2	295.2	295.2	295.2	293.3	292.9	292.4	293.3	293.3	293.2	293.1
-2	***	***	1.022	295.2	295.2	295.2	295.2	295.2	295.2	293.3	292.9	292.6	293.2	293.4	293.2	293.1
-1	***	***	1.021	295.2	295.2	295.2	295.2	295.2	295.2	293.4	292.9	292.6	293.3	293.2	293.2	293.0
0	6.293	296.2	1.026	295.7	295.2	295.2	295.2	295.2	295.7	293.4	293.5	292.8	293.5	293.5	293.4	293.2
1	6.037	280.2	1.105	299.2	298.2	297.2	298.2	299.2	299.2	296.4	296.7	295.7	296.8	296.5	296.4	296.1
2	5.779	276.2	1.214	302.2	301.2	300.2	300.2	301.2	301.2	299.9	300.0	298.9	300.2	299.9	299.7	299.4
3	5.465	275.2	1.312	304.7	303.7	303.2	303.2	304.2	304.2	302.5	302.3	301.1	302.6	302.1	302.0	301.7
4	5.208	273.2	1.403	306.2	305.2	305.2	305.2	306.2	306.2	304.0	303.5	302.5	303.5	303.3	303.2	303.0
5	4.912	273.2	1.516	306.7	306.2	306.2	306.2	306.7	306.7	305.0	304.4	303.6	304.5	304.3	304.2	304.0
6	4.697	273.2	1.596	307.2	307.2	306.2	307.2	307.2	307.2	305.4	304.6	304.0	305.0	304.6	304.8	304.5
7	4.467	272.2	1.671	307.2	307.2	307.2	307.2	307.2	307.2	305.5	304.9	304.2	305.0	304.9	304.8	304.6
8	4.254	271.2	1.743	307.2	307.2	307.2	307.2	307.2	307.2	305.6	304.5	304.2	304.8	304.6	304.6	304.6
9	4.108	271.2	1.813	307.2	307.2	307.2	307.2	307.2	307.2	305.4	304.7	304.0	304.7	304.6	304.5	304.5
10	3.902	270.2	1.879	307.2	307.2	307.2	307.2	307.2	307.2	305.3	304.4	303.9	304.6	304.3	304.4	304.5
11	3.766	270.2	1.941	307.2	307.2	307.2	307.2	307.2	307.2	304.9	304.4	304.0	304.5	304.5	304.5	304.5
12	3.617	270.2	2.001	307.2	307.2	307.2	307.2	307.2	307.2	304.9	304.2	303.6	304.4	304.3	304.2	304.2
13	3.496	268.2	2.041	306.2	307.2	307.2	307.2	307.2	307.2	304.7	303.9	303.6	304.2	304.0	304.0	304.0
14	3.549	266.2	2.040	306.2	306.2	306.2	306.2	306.2	306.2	303.9	303.6	303.3	303.8	303.8	303.7	303.6
15	***	***	2.036	305.7	305.7	305.7	306.2	306.2	306.2	304.0	303.2	303.0	303.7	303.5	303.5	303.5
16	***	***	2.033	305.2	305.2	305.2	305.2	305.2	305.2	303.5	303.0	302.6	303.4	303.3	303.1	303.1
17	***	***	2.031	305.2	305.2	305.2	305.2	305.2	305.2	303.3	302.7	302.5	303.1	303.1	303.0	303.0
18	***	***	2.029	305.2	305.2	305.2	305.2	305.2	305.2	303.1	302.6	302.3	302.9	302.9	302.8	302.7
19	***	***	2.028	305.2	305.2	305.2	305.2	305.2	305.2	303.1	302.5	302.1	302.6	302.7	302.7	302.5
20	***	***	2.027	304.2	304.2	304.2	305.2	305.2	305.2	303.1	302.4	302.0	302.4	302.6	302.4	302.4
21	***	***	2.025	304.2	304.2	304.2	304.2	304.2	305.2	303.0	302.3	302.0	302.4	302.5	302.4	302.3
22	***	***	2.024	304.2	304.2	304.2	304.2	304.2	304.2	302.6	302.0	301.9	302.4	302.3	302.2	302.1
27	***	***	2.019	303.2	303.2	303.2	303.2	303.2	303.7	302.0	301.4	301.0	301.5	301.8	301.7	301.4
32	***	***	2.014	302.7	302.7	302.7	303.2	303.2	303.2	301.0	300.7	300.4	301.0	301.1	300.9	300.7
37	***	***	2.012	302.2	302.2	302.2	302.2	302.2	302.2	300.5	300.2	299.7	300.6	300.8	300.4	300.2
42	***	***	2.009	301.2	301.2	301.2	302.2	301.7	302.2	300.2	299.6	299.4	300.0	300.1	299.9	299.7
47	***	***	2.006	301.2	301.2	301.2	301.2	301.2	301.2	299.6	299.2	298.9	299.5	299.5	299.4	299.3
52	***	***	2.004	301.2	301.2	301.2	301.2	301.2	301.2	299.3	298.8	298.6	298.9	299.1	299.0	298.8
57	***	***	2.002	300.2	300.2	300.2	300.2	300.2	301.2	298.8	298.5	298.2	298.7	299.0	298.7	298.6
62	***	***	2.001	300.2	300.2	300.2	300.2	300.2	300.2	298.8	298.2	298.0	298.6	298.7	298.6	298.4
67	***	***	1.998	300.2	300.2	300.2	300.2	300.2	300.2	298.5	298.0	297.8	298.3	298.5	298.3	298.1
72	***	***	1.997	300.2	300.2	300.2	300.2	300.2	300.2	298.2	297.8	297.5	298.0	298.2	298.0	297.9
82	***	***	1.994	299.2	299.2	299.2	299.7	299.2	300.2	297.5	297.4	297.0	297.7	297.8	297.7	297.5
92	***	***	1.991	299.2	299.2	299.2	299.2	299.2	299.2	297.3	297.0	296.8	297.4	297.6	297.4	297.3
102	***	***	1.989	299.2	299.2	299.2	299.2	299.2	299.2	297.3	296.7	296.6	297.1	297.3	297.1	297.0
112	***	***	1.987	298.2	298.2	298.2	298.2	298.2	299.2	296.9	296.4	296.1	296.9	296.7	296.8	296.5
122	***	***	1.985	298.2	298.2	298.2	298.2	298.2	298.2	296.7	296.2	295.9	296.7	296.5	296.5	296.3
132	***	***	1.984	298.2	298.2	298.2	298.2	298.2	298.2	296.4	296.0	295.5	296.3	296.5	296.4	296.2
142	***	***	1.982	298.2	298.2	298.2	298.2	298.2	298.2	296.3	295.8	295.4	296.0	296.2	296.0	296.0
152	***	***	1.981	298.2	298.2	298.2	298.2	298.2	298.2	296.1	295.7	295.3	296.0	296.0	295.9	295.8
162	***	***	1.980	298.2	298.2	298.2	298.2	298.2	298.2	296.1	295.7	295.3	295.9	296.0	295.9	295.8
172	***	***	1.978	297.2	297.2	297.2	297.2	297.2	298.2	295.9	295.5	295.0	295.7	295.8	295.6	295.5
182	***	***	1.977	297.2	297.2	297.2	297.2	297.2	297.2	295.7	295.4	295.0	295.5	295.6	295.6	295.4

COORDINATES

I	R (M)	THETA (DEG)	Z (M)
1	0.457	45	-0.152
2	0.457	45	-0.076
3	0.457	45	0.0
4	0.457	45	0.076
5	0.457	45	0.152
6	0.457	45	0.229
7	0.457	45	0.530
8	0.457	45	0.610
9	0.457	45	0.687
10	0.457	45	0.762
11	0.457	45	0.838
12	0.457	45	0.914
13	0.457	45	0.991

Table 43B — Inferred Pressurant Distribution, Scaling Run 66, Test Configuration 4: One 2.54-cm Nozzle

t (s)	$\bar{T}$ (°C)	$\bar{T}_s$ (°C)	$\bar{T}_p$ (°C)	β	β/θ	$\bar{X}$	Pressurant Fractions (X) at Locations 1												
							1	2	3	4	5	6	7	8	9	10	11	12	13
COMMENCE VALVE OPENING																			
0.0	21.1	21.1	67.8	4.5	0.0000	0.000	0.000	0.000	0.000	0.000	0.000	0.000	0.000	0.000	0.000	0.000	0.000	0.000	
1.0	24.2	24.5	19.7	95.1	6.0569	.062	-.022	.083	.293	.083	-.127	-.022	.083	.041	.104	.020	.083	.083	.104
VALVE FULLY OPEN																			
2.0	27.1	28.6	18.1	30.2	2.5365	.137	.096	.144	.240	.240	.144	.192	.096	.087	.134	.068	.106	.115	.125
3.0	29.7	32.3	18.8	16.2	1.1199	.195	.167	.204	.241	.241	.167	.204	.159	.181	.218	.159	.196	.196	.204
4.0	31.2	34.9	19.8	14.8	.9177	.243	.220	.253	.253	.253	.187	.220	.214	.253	.266	.253	.266	.266	.260
5.0	32.1	36.8	20.9	15.6	1.1625	.298	.299	.299	.299	.299	.267	.299	.261	.305	.311	.299	.311	.311	.311
6.0	32.6	37.9	21.8	14.9	.7415	.332	.332	.301	.364	.301	.301	.332	.301	.357	.351	.332	.357	.339	.3[illegible]
7.0	32.7	38.5	22.5	15.7	.7132	.362	.371	.340	.340	.340	.340	.371	.334	.378	.378	.371	.378	.384	.378
8.0	32.7	38.8	23.0	16.4	.6946	.388	.394	.362	.362	.362	.362	.394	.349	.425	.400	.406	.419	.413	.400
9.0	32.6	39.0	23.5	16.2	.6388	.412	.415	.383	.383	.383	.383	.415	.383	.434	.434	.434	.441	.441	.428
10.0	32.5	39.2	23.8	16.4	.5893	.433	.431	.398	.398	.398	.398	.431	.405	.470	.457	.457	.476	.463	.444
COMMENCE VALVE CLOSURE																			
11.0	32.5	39.4	24.2	15.8	.5133	.451	.449	.416	.416	.416	.416	.449	.449	.488	.468	.475	.482	.475	.462
12.0	32.4	39.4	24.4	7.9	.5177	.467	.457	.424	.424	.424	.424	.457	.457	.511	.504	.497	.504	.504	.491
VALVE FULLY CLOSED																			
13.0	32.2	39.3	24.5	5.5	.3643	.478	.523	.421	.421	.421	.421	.455	.469	.530	.503	.510	.523	.516	.503
14.0	32.1	39.1	24.5	.5	.0337	.478	.483	.449	.449	.449	.449	.483	.483	.510	.483	.497	.497	.497	.490
15.0	31.5	38.2	24.2	2.1	.1397	.478	.503	.468	.468	.432	.432	.468	.461	.525	.489	.489	.503	.496	.482
16.0	31.0	37.5	24.0	1.7	.1101	.478	.502	.465	.465	.465	.465	.502	.458	.502	.480	.473	.480	.487	.473
17.0	30.7	37.1	23.8	1.2	.0763	.478	.496	.459	.459	.459	.459	.496	.466	.519	.474	.489	.489	.481	.474
18.0	30.4	36.6	23.7	1.2	.0786	.478	.487	.449	.449	.449	.449	.487	.472	.518	.487	.495	.495	.495	.487
19.0	30.3	36.4	23.6	.5	.0403	.478	.482	.443	.443	.443	.443	.482	.466	.513	.497	.513	.505	.497	.490
20.0	30.1	36.2	23.5	.6	.0409	.478	.536	.496	.496	.418	.418	.457	.441	.504	.481	.504	.489	.496	.481
21.0	29.8	35.8	23.4	1.3	.0839	.478	.521	.481	.481	.481	.481	.440	.432	.505	.465	.489	.481	.481	.481
22.0	29.7	35.5	23.3	.7	.0430	.478	.508	.467	.467	.467	.467	.508	.451	.508	.459	.475	.483	.483	.475
23.0	29.4	35.1	23.2	1.3	.0884	.478	.503	.461	.461	.461	.461	.503	.461	.511	.478	.478	.478	.478	.486
24.0	29.4	35.1	23.2	0.0	0.0000	.478	.497	.455	.455	.455	.455	.497	.455	.505	.497	.497	.480	.480	.489
25.0	29.2	34.9	23.1	.7	.0454	.478	.526	.483	.483	.441	.441	.483	.449	.517	.466	.483	.483	.475	.483
26.0	29.9	34.4	23.0	1.4	.0933	.478	.544	.500	.500	.413	.500	.457	.448	.500	.474	.474	.465	.474	.465
27.0	29.9	34.4	23.0	0.0	0.0000	.478	.529	.486	.486	.486	.486	.486	.433	.494	.468	.477	.459	.459	.468
28.0	29.8	34.2	22.9	.7	.0480	.478	.518	.473	.473	.473	.473	.518	.429	.509	.456	.473	.473	.473	.473
29.0	29.6	34.0	22.8	.7	.0489	.478	.509	.464	.464	.464	.464	.509	.446	.509	.464	.482	.482	.482	.482
30.0	29.5	33.7	22.8	.8	.0499	.478	.505	.459	.459	.459	.459	.505	.450	.505	.468	.496	.478	.487	.487
31.0	29.5	33.7	22.8	0.0	0.0000	.478	.501	.455	.455	.455	.455	.501	.464	.519	.455	.492	.492	.492	.482
32.0	29.2	33.3	22.6	1.6	.1029	.478	.530	.483	.483	.436	.436	.483	.465	.511	.474	.474	.474	.483	.483
33.0	29.2	33.3	22.6	0.0	0.0000	.478	.535	.508	.508	.414	.508	.461	.451	.498	.461	.470	.451	.461	.470
34.0	29.0	33.1	22.6	.8	.0531	.478	.543	.495	.495	.447	.495	.495	.447	.505	.457	.457	.447	.467	.467

XXX

Set 1, Table C — Mean Values of All Quantities, Scaling Runs 23-31

MEAN VALUES OF ALL QUANTITIES

t (s)	$\bar{T}$ (°C)	$\bar{T}_c$ (°C)	$\bar{T}_s$ (°C)	β	β/θ	$\bar{X}$	Mean Pressurant Fractions at Locations I: 1	2	3	4	5	6	7	8	9	10	11	12	13	τ
0.0	26.5	26.5	105.4	2.4	0.0000	0.000	0.000	0.000	0.000	0.000	0.000	0.000	0.000	0.000	0.000	0.000	0.000	0.000	0.000	0.00
.9	27.6	27.5	38.6	3685.4	2.0028	.024	-.844	.684	1.181	.198	-.172	.399	-.317	-.037	.113	-.189	-.224	-.127	-.359	.05
1.2	28.5	28.5	33.1	1802.7	5.8814	.047	-1.334	1.091	2.932	.840	.072	.462	-.332	-.871	-.183	-.766	-.726	-.195	-.377	.10
1.5	29.5	29.6	29.8	287.8	8.3997	.071	-1.720	1.398	4.440	1.351	.300	.515	-.349	-1.565	-.449	-1.245	-1.126	-.243	-.385	.15
1.9	30.6	30.8	29.4	102.8	7.3123	.094	-1.456	1.124	4.297	1.092	.312	.375	-.251	-1.408	-.393	-1.096	-.947	-.151	-.268	.20
2.2	31.7	32.1	29.9	65.4	5.2458	.118	-1.034	.764	3.308	.584	.173	.236	-.153	-.846	-.170	-.653	-.525	-.025	-.124	.25
2.5	32.9	33.6	26.9	38.7	3.2072	.142	-.540	.399	2.013	.091	.034	.124	-.041	-.211	.072	-.155	-.072	.102	.026	.30
2.9	33.9	35.0	28.7	27.2	2.0962	.165	-.307	.330	1.371	.032	.033	.110	.043	.001	.153	.026	.075	.158	.114	.35
3.3	35.0	36.5	28.7	21.5	1.5457	.189	-.170	.334	1.082	.061	.077	.140	.100	.078	.188	.099	.120	.191	.156	.40
3.8	35.9	37.8	28.9	18.0	1.1906	.212	-.071	.356	.918	.083	.108	.157	.142	.137	.217	.151	.163	.215	.187	.45
4.3	36.7	39.1	29.2	16.6	1.0143	.236	-.014	.387	.857	.102	.120	.175	.170	.181	.238	.192	.206	.234	.219	.50
4.9	37.4	40.2	29.5	16.0	.9286	.260	.030	.411	.828	.132	.142	.194	.189	.210	.256	.227	.237	.259	.251	.55
5.5	38.0	41.2	29.8	15.9	.8773	.283	.073	.436	.827	.153	.159	.211	.223	.237	.282	.255	.264	.289	.275	.60
6.1	38.4	42.1	30.1	15.9	.8240	.307	.128	.458	.851	.166	.171	.232	.242	.267	.306	.271	.293	.311	.292	.65
6.8	38.7	42.8	30.4	16.0	.7789	.330	.179	.489	.872	.189	.196	.246	.260	.294	.317	.294	.320	.328	.311	.70
7.6	38.9	43.4	30.7	15.8	.7105	.354	.215	.522	.880	.227	.227	.256	.282	.312	.332	.325	.337	.346	.341	.75
8.5	39.0	43.9	31.0	15.9	.6661	.378	.260	.544	.891	.261	.261	.271	.301	.341	.350	.349	.358	.365	.357	.80
9.5	39.1	44.3	31.2	16.0	.6402	.401	.292	.578	.905	.294	.285	.291	.327	.352	.375	.375	.374	.385	.383	.85
10.6	39.0	44.6	31.5	16.2	.5748	.425	.319	.620	.926	.327	.303	.320	.342	.381	.388	.387	.401	.407	.403	.90
11.9	38.9	44.8	31.8	-49.1	.5333	.448	.336	.638	.955	.370	.327	.333	.370	.403	.418	.400	.423	.431	.425	.95
13.3	38.5	44.5	31.8	-144.1	.2695	.472	.361	.634	.970	.401	.361	.361	.393	.433	.436	.444	.452	.445	.446	1.00
15.3	38.0	43.8	31.5	29.3	.0884	.472	.421	.565	.744	.426	.410	.408	.417	.442	.456	.469	.451	.463	.467	1.05
16.6	37.2	42.7	31.0	-44.8	.1297	.472	.439	.545	.666	.433	.428	.419	.427	.452	.460	.474	.462	.468	.463	1.10
18.0	36.8	42.2	30.8	-11.4	.0602	.472	.435	.547	.636	.447	.439	.418	.424	.443	.465	.494	.449	.472	.468	1.15
19.3	36.4	41.6	30.5	-24.0	.0695	.472	.442	.529	.623	.440	.445	.426	.423	.455	.469	.494	.458	.469	.462	1.20
20.7	36.0	41.0	30.4	-13.0	.0738	.472	.445	.515	.591	.442	.452	.425	.432	.455	.479	.509	.454	.477	.459	1.25
22.1	35.8	40.7	30.2	-10.2	.0431	.472	.452	.500	.572	.445	.453	.427	.431	.455	.485	.519	.456	.478	.462	1.30
23.4	35.5	40.4	30.1	-15.9	.0485	.472	.450	.504	.561	.448	.462	.432	.431	.446	.489	.526	.446	.483	.460	1.35
24.8	35.2	40.0	29.9	-26.5	.0559	.472	.452	.505	.539	.463	.472	.433	.433	.441	.493	.523	.440	.483	.460	1.40
26.2	35.0	39.7	29.8	-5.4	.0383	.472	.470	.486	.522	.460	.467	.442	.432	.442	.502	.527	.442	.482	.462	1.45
27.5	34.8	39.4	29.7	-17.8	.0556	.472	.453	.472	.537	.459	.473	.442	.432	.449	.500	.529	.444	.484	.459	1.50
28.9	34.7	39.3	29.6	-11.0	.0217	.472	.469	.469	.525	.453	.462	.443	.429	.455	.502	.537	.450	.482	.460	1.55
30.3	34.5	39.0	29.5	4.0	.0486	.472	.454	.461	.514	.444	.490	.435	.434	.454	.501	.543	.444	.488	.468	1.60
31.6	34.3	38.7	29.4	-9.2	.0408	.472	.443	.457	.505	.459	.498	.435	.442	.448	.506	.548	.440	.492	.464	1.65
21.4	22.9	25.8	19.6	-30.6	.0311	.313	.307	.312	.319	.308	.308	.294	.284	.301	.339	.364	.294	.329	.308	1.70
14.6	15.3	17.2	13.1	-6.3	.0185	.208	.206	.201	.206	.206	.206	.195	.186	.200	.239	.247	.196	.220	.207	1.75
3.5	3.8	4.3	3.3	.2	.0114	.052	.049	.049	.059	.049	.059	.049	.046	.053	.059	.058	.050	.053	.046	1.80
3.7	3.8	4.3	3.3	0.0	.0003	.052	.059	.046	.059	.046	.059	.046	.045	.055	.058	.061	.050	.050	.046	1.85
0.0	0.0	0.0	0.0	0.0	0.0000	0.000	0.000	0.000	0.000	0.000	0.000	0.000	0.000	0.000	0.000	0.000	0.000	0.000	0.000	1.90
0.0	0.0	0.0	0.0	0.0	0.0000	0.000	0.000	0.000	0.000	0.000	0.000	0.000	0.000	0.000	0.000	0.000	0.000	0.000	0.000	1.95
0.0	0.0	0.0	0.0	0.0	0.0000	0.000	0.000	0.000	0.000	0.000	0.000	0.000	0.000	0.000	0.000	0.000	0.000	0.000	0.000	2.00
0.0	0.0	0.0	0.0	0.0	0.0000	0.000	0.000	0.000	0.000	0.000	0.000	0.000	0.000	0.000	0.000	0.000	0.000	0.000	0.000	2.05
0.0	0.0	0.0	0.0	0.0	0.0000	0.000	0.000	0.000	0.000	0.000	0.000	0.000	0.000	0.000	0.000	0.000	0.000	0.000	0.000	2.10
0.0	0.0	0.0	0.0	0.0	0.0000	0.000	0.000	0.000	0.000	0.000	0.000	0.000	0.000	0.000	0.000	0.000	0.000	0.000	0.000	2.15
0.0	0.0	0.0	0.0	0.0	0.0000	0.000	0.000	0.000	0.000	0.000	0.000	0.000	0.000	0.000	0.000	0.000	0.000	0.000	0.000	2.20
0.0	0.0	0.0	0.0	0.0	0.0000	0.000	0.000	0.000	0.000	0.000	0.000	0.000	0.000	0.000	0.000	0.000	0.000	0.000	0.000	2.25
0.0	0.0	0.0	0.0	0.0	0.0000	0.000	0.000	0.000	0.000	0.000	0.000	0.000	0.000	0.000	0.000	0.000	0.000	0.000	0.000	2.30
0.0	0.0	0.0	0.0	0.0	0.0000	0.000	0.000	0.000	0.000	0.000	0.000	0.000	0.000	0.000	0.000	0.000	0.000	0.000	0.000	2.35
0.0	0.0	0.0	0.0	0.0	0.0000	0.000	0.000	0.000	0.000	0.000	0.000	0.000	0.000	0.000	0.000	0.000	0.000	0.000	0.000	2.40
0.0	0.0	0.0	0.0	0.0	0.0000	0.000	0.000	0.000	0.000	0.000	0.000	0.000	0.000	0.000	0.000	0.000	0.000	0.000	0.000	2.45

Set 2, Table C — Mean Values of All Quantities, Scaling Runs 32-34

MEAN VALUES OF ALL QUANTITIES

t (s)	$\bar{T}$ (°C)	$\bar{T}_a$ (°C)	$\bar{T}_p$ (°C)	β	β/θ	$\bar{X}$	MEAN PRESSURANT FRACTIONS AT LOCATIONS I 1	2	3	4	5	6	7	8	9	10	11	12	13	τ
0.0	17.9	17.9	95.1	1.0	0.0000	0.000	0.000	0.000	0.000	0.000	0.000	0.000	0.000	0.000	0.000	0.000	0.000	0.000	0.000	0.00
1.0	19.0	19.6	25.9	11601.8	2.0599	.026	-.140	-.144	.419	-.328	-.217	-.050	-.026	.547	.083	.017	.086	.033	.049	.05
1.3	20.0	20.0	21.0	8404.8	6.0882	.051	-.276	-.322	.728	-.691	-.449	-.114	-.039	1.136	.230	.097	.205	.059	.102	.10
1.6	21.0	21.1	20.4	5173.3	8.2666	.077	-.181	-.029	1.379	-.390	-.229	.070	-.106	.566	.006	-.199	-.005	.009	.112	.15
1.8	22.0	22.3	20.5	1927.1	9.1770	.103	-.063	.233	1.791	-.090	.006	.235	-.170	.052	-.170	-.400	-.157	-.039	.107	.20
2.0	23.3	23.7	20.6	91.6	8.6605	.128	.006	.380	1.886	.097	.146	.308	-.188	-.203	-.231	-.430	-.185	-.038	.102	.25
2.2	24.6	25.3	20.7	69.3	7.1509	.154	.024	.472	1.834	.237	.221	.320	-.160	-.346	-.179	-.375	-.154	.049	.141	.30
2.4	25.6	26.9	20.7	47.0	5.6414	.180	.042	.564	1.783	.377	.295	.332	-.131	-.489	-.146	-.321	-.124	.056	.100	.35
2.6	26.8	28.6	20.6	30.9	4.2024	.205	.027	.515	1.525	.334	.255	.281	-.061	-.301	-.003	-.147	.000	.124	.122	.40
2.9	28.0	30.5	20.6	20.2	2.9600	.231	.015	.446	1.248	.252	.192	.231	.025	-.058	.145	.024	.129	.197	.159	.45
3.1	29.2	32.4	20.5	15.7	2.2254	.257	.058	.432	1.090	.233	.195	.241	.093	.049	.208	.114	.191	.235	.200	.50
3.4	30.3	34.4	20.5	12.0	1.5744	.282	.111	.424	.945	.221	.208	.261	.156	.141	.260	.196	.245	.264	.241	.55
3.8	31.3	36.2	20.6	10.0	1.1894	.308	.154	.433	.872	.227	.218	.276	.199	.204	.300	.262	.290	.297	.276	.60
4.2	32.2	38.0	20.8	9.3	1.0187	.333	.192	.453	.848	.252	.239	.289	.240	.247	.330	.303	.317	.327	.306	.65
4.6	32.9	39.7	21.1	9.0	.8989	.359	.228	.479	.841	.281	.268	.306	.279	.281	.354	.328	.339	.353	.334	.70
5.0	33.4	41.1	21.4	8.9	.8232	.385	.263	.511	.849	.312	.305	.329	.313	.309	.373	.346	.361	.374	.356	.75
5.5	33.8	42.3	21.6	9.1	.7819	.411	.305	.547	.870	.340	.340	.357	.334	.337	.388	.366	.389	.389	.375	.80
6.1	34.2	43.6	22.0	9.1	.6999	.436	.352	.579	.886	.366	.368	.382	.358	.365	.407	.391	.418	.409	.393	.85
6.8	34.4	44.8	22.4	8.9	.6074	.462	.394	.603	.885	.396	.403	.411	.389	.394	.430	.422	.432	.433	.416	.90
7.7	34.6	45.9	22.8	1677.2	.5274	.488	.430	.646	.920	.433	.431	.444	.341	.429	.457	.451	.458	.456	.444	.95
9.0	34.0	45.8	22.9	1017.6	.3944	.513	.466	.640	.917	.458	.458	.466	.440	.463	.476	.473	.476	.472	.467	1.00
9.6	33.4	44.8	22.6	962.2	.2709	.513	.481	.615	.815	.464	.473	.476	.453	.472	.492	.487	.489	.486	.479	1.05
10.2	32.8	43.9	22.3	853.1	.1767	.513	.489	.596	.737	.468	.487	.483	.465	.479	.488	.499	.499	.436	.488	1.10
10.7	32.3	43.2	22.0	629.4	.1464	.513	.485	.585	.711	.468	.498	.484	.472	.481	.494	.505	501	.497	.487	1.15
11.3	31.9	42.5	21.8	477.4	.1256	.513	.488	.583	.693	.472	.502	.488	.479	.483	.494	.508	.498	.496	486	1.20
11.9	31.6	42.0	21.7	460.8	.1134	.513	.492	.581	.682	.476	.512	.490	.480	.482	.491	.510	.495	.494	.485	1.25
12.5	31.2	41.5	21.5	444.6	.1067	.513	.495	.573	.678	.486	.519	.490	.476	.483	.494	.511	.491	.493	.482	1.30
13.1	30.9	41.0	21.4	455.9	.1000	.513	.494	.564	.687	.494	.513	.501	.471	.483	.496	.512	486	.491	.476	1.35
13.7	30.8	40.7	21.3	358.0	.0786	.513	496	.561	.685	.488	.505	.502	.472	.483	.497	.520	.493	.492	.476	1.40
14.3	30.5	40.4	21.2	205.5	.0645	.513	.500	.571	.671	.487	.505	.491	.475	.484	.500	.525	.496	.495	.473	1.45
14.8	30.4	40.2	21.2	223.1	.0617	.513	.501	.567	.657	.486	.504	.494	.478	.485	.503	.533	.494	.497	.473	1.50
15.4	30.2	39.8	21.1	249.3	.0664	.513	.501	.556	.645	.490	.509	.501	.477	.484	.507	.539	.491	.499	.473	1.55
16.0	30.0	39.6	21.0	356.3	.0632	.513	.493	.547	.627	.496	.520	.493	.471	.487	.514	.548	.496	.503	.476	1.60
16.6	29.9	39.3	20.9	410.3	.0597	.513	.493	.545	.609	.495	.522	.493	.473	.488	.520	.557	.496	.503	.476	1.65
17.2	29.7	39.0	20.8	312.1	.0611	.513	.500	.542	.597	.498	.520	.500	.477	.485	.522	.563	.489	.501	.477	1.70
17.7	29.5	38.8	20.8	258.2	.0608	.513	.503	.537	.599	.494	.525	.495	.476	.486	.526	.563	.490	.502	.476	1.75
18.4	29.4	38.5	20.7	274.5	.0597	.513	.504	.539	.600	.489	.524	.489	.474	.488	.531	.562	.492	.505	.476	1.80
18.9	29.2	38.3	20.6	247.7	.0507	.513	.494	.538	.601	.489	.516	.496	.475	.486	.532	.567	.488	.509	.479	1.85
19.5	29.1	38.1	20.6	133.0	.0433	.513	.491	.535	.590	.484	.512	.497	.479	.488	.531	.573	.489	.513	.481	1.90
20.1	29.0	38.0	20.6	72.6	.0423	.513	.493	.532	.590	.483	.508	.493	.479	.493	.535	.578	.492	.516	.481	1.95
20.7	28.9	37.8	20.5	66.1	.0432	.513	.488	.525	.578	.497	.517	.482	.479	.496	.539	.580	.490	.519	.480	2.00
21.3	28.8	37.6	20.4	182.2	.0512	.513	.490	.527	.575	.502	.522	.482	.478	.494	.539	.577	.488	.519	.478	2.05
21.8	28.7	37.4	20.4	302.6	.0561	.513	.492	.530	.572	.501	.521	.491	.477	.487	.544	.576	.485	.518	.477	2.10
22.4	28.6	37.2	20.3	215.5	.0432	.513	.492	.532	.566	.508	.528	.483	.477	.485	.544	.581	.482	.517	.475	2.15
23.0	28.4	37.1	20.3	181.0	.0358	.513	.495	.532	.562	.511	.532	.474	.478	.487	.540	.588	.481	.517	.475	2.20
23.6	28.3	36.9	20.2	275.4	.0466	.513	.503	.522	.563	.501	.522	.476	.482	.492	.544	.589	.484	.516	.476	2.25
24.2	28.2	36.6	20.2	231.0	.0575	.513	.512	.513	.563	.492	.513	.485	.486	.491	.551	.589	.484	.514	.476	2.30
24.8	28.0	36.4	20.1	107.3	.0597	.513	.504	.514	.560	.494	.514	.482	.489	.492	.556	.593	.485	.512	.476	2.35
25.4	27.9	36.2	20.1	169.6	.0545	.513	.494	.522	.555	.493	.522	.486	.491	.493	.535	596	.483	.511	.474	2.40
25.9	27.8	36.1	20.0	303.7	.0431	.513	.491	.530	.547	.485	.525	.491	.493	.492	.556	.597	.480	.509	.476	2.45

Set 3, Table C — Mean Values of All Quantities, Scaling Runs 35-37

MEAN VALUES OF ALL QUANTITIES

t (s)	$\bar{T}$ (°C)	$\bar{T}_s$ (°C)	$\bar{T}_f$ (°C)	β	β/θ	$\bar{X}$	Mean Pressurant Fractions at Locations I 1	2	3	4	5	6	7	8	9	10	11	12	13	r
0.0	16.9	16.9	50.3	.4	0.0000	0.000	0.000	0.000	0.000	0.000	0.000	0.000	0.000	0.000	0.000	0.000	0.000	0.000	0.000	0.00
1.1	18.5	18.5	20.7	71237.1	-.0777	.025	-.359	-.445	-.574	-.705	-.600	-.340	-.512	1.435	.527	.575	.626	.856	-.158	.05
1.3	19.6	19.7	20.8	53439.8	1.3089	.050	-.035	-.220	-.128	-.443	-.208	.015	-.520	.974	.220	.231	.391	.657	-.279	.10
1.4	20.7	21.0	21.0	35642.4	2.6956	.076	.289	.005	.318	-.181	.183	.369	-.528	.512	-.087	-.113	.155	.459	-.401	.15
1.6	21.9	22.2	21.1	17845.0	4.0823	.101	.614	.230	.764	.080	.575	.725	-.536	.050	-.394	-.457	-.080	.260	-.522	.20
1.7	23.0	23.5	21.3	47.6	5.4690	.126	.938	.455	1.209	.342	.967	1.080	-.545	-.412	-.701	-.801	-.315	.062	-.644	.25
1.9	24.1	24.8	21.5	43.4	5.8243	.151	1.213	.587	1.495	.502	1.287	1.363	-.542	-.753	-.860	-1.032	-.482	-.065	-.749	.30
2.0	25.2	26.2	21.6	39.2	6.1796	.176	1.488	.718	1.781	.662	1.607	1.647	-.538	-1.095	-1.019	-1.263	-.649	-.192	-.854	.35
2.2	26.2	27.5	21.6	33.5	6.2868	.202	1.639	.812	1.967	.781	1.804	1.807	-.491	-1.325	-1.098	-1.384	-.736	-.280	-.877	.40
2.4	27.2	29.1	21.8	28.2	5.3797	.227	1.429	.695	1.712	.647	1.579	1.583	-.356	-1.059	-.838	-1.089	-.519	-.151	-.687	.45
2.6	28.3	30.7	21.9	23.3	4.4314	.252	1.213	.567	1.436	.498	1.342	1.351	-.223	-.771	-.563	-.778	-.281	-.010	-.496	.50
2.8	29.3	32.3	21.9	18.3	3.4832	.277	.997	.439	1.161	.348	1.105	1.119	-.090	-.482	-.289	-.468	-.063	.131	-.304	.55
3.0	30.3	34.0	22.0	14.5	2.6026	.302	.806	.337	.915	.236	.891	.912	.032	-.213	-.058	-.184	.133	.243	-.122	.60
3.2	31.1	35.6	22.0	12.0	1.9808	.327	.692	.289	.762	.177	.757	.781	.114	-.023	.096	.004	.273	.324	.009	.65
3.5	31.7	37.1	22.1	11.1	1.7349	.353	.689	.315	.745	.191	.741	.760	.137	.053	.144	.049	.332	.363	.063	.70
3.8	32.3	38.6	22.1	10.3	1.4890	.378	.686	.342	.727	.204	.725	.740	.161	.128	.191	.094	.391	.403	.117	.75
4.2	32.8	40.0	22.2	9.8	1.3098	.403	.682	.381	.722	.216	.710	.721	.190	.181	.225	.130	.448	.452	.181	.80
4.5	33.1	41.1	22.3	9.9	1.1950	.428	.693	.420	.732	.224	.710	.729	.208	.213	.260	.186	.472	.494	.225	.85
5.0	33.3	42.2	22.5	-1704.7	1.0834	.453	.705	.455	.748	.231	.714	.740	.225	.246	.295	.243	.498	.529	.267	.90
5.5	33.4	43.2	22.7	-6437.4	.9155	.478	.728	.475	.771	.250	.733	.756	.261	.282	.319	.282	.517	.551	.299	.95
6.7	33.5	44.0	23.0	-2850.6	.3400	.504	.766	.488	.807	.295	.772	.772	.321	.350	.375	.345	.496	.520	.359	1.00
7.3	33.0	43.4	22.8	-2785.6	.1596	.504	.786	.457	.820	.309	.791	.791	.339	.363	.380	.362	.478	.497	.374	1.05
7.7	32.6	42.7	22.6	-2711.2	.1845	.504	.795	.442	.595	.312	.798	.798	.346	.364	.382	.369	.476	.494	.376	1.10
8.0	32.2	42.1	22.4	-2637.0	.2055	.504	.804	.427	.570	.315	.805	.805	.352	.365	.384	.377	.475	.490	.378	1.15
8.3	31.9	41.7	22.2	-2443.0	.1871	.504	.811	.424	.559	.319	.811	.811	.352	.366	.384	.379	.471	.484	.376	1.20
8.6	31.6	41.3	22.1	-2168.2	.1662	.504	.816	.424	.552	.323	.816	.816	.352	.367	.383	.380	.466	.478	.374	1.25
9.0	31.4	40.9	21.9	-1893.2	.1479	.504	.821	.425	.546	.326	.821	.821	.352	.367	.383	.382	.461	.471	.372	1.30
9.3	31.2	40.5	21.8	-1661.9	.1401	.504	.824	.427	.542	.327	.825	.824	.355	.366	.385	.381	.456	.467	.372	1.35
9.6	30.9	40.2	21.7	-1600.8	.1370	.504	.824	.429	.539	.328	.829	.824	.355	.366	.387	.381	.452	.463	.372	1.40
9.9	30.7	39.9	21.5	-1539.9	.1316	.504	.825	.432	.537	.328	.835	.823	.355	.364	.388	.381	.448	.460	.371	1.45
10.2	30.5	39.6	21.4	-1479.1	.1221	.504	.829	.429	.533	.326	.844	.821	.353	.367	.389	.388	.445	.455	.368	1.50
10.5	30.3	39.4	21.3	-1410.0	.1125	.504	.834	.424	.528	.319	.850	.825	.333	.369	.391	.395	.442	.451	.366	1.55
10.9	30.1	39.1	21.2	-1338.8	.1073	.504	.835	.417	.526	.314	.851	.831	.354	.372	.394	.402	.439	.448	.363	1.60
11.2	30.0	38.8	21.2	-1267.4	.1056	.504	.832	.409	.525	.319	.848	.838	.356	.370	.397	.405	.438	.448	.363	1.65
11.5	29.8	38.6	21.1	-1231.8	.1048	.504	.831	.401	.523	.326	.846	.843	.357	.368	.401	.407	.435	.448	.362	1.70
11.8	29.6	38.3	21.0	-1247.1	.0992	.504	.833	.394	.518	.329	.846	.841	.359	.368	.404	.412	.433	.447	.364	1.75
12.2	29.5	38.1	21.0	-1262.1	.0937	.504	.837	.389	.511	.330	.848	.837	.363	.370	.405	.418	.429	.446	.365	1.80
12.5	29.4	37.9	20.9	-1275.4	.0888	.504	.841	.384	.503	.331	.850	.834	.366	.374	.405	.424	.425	.445	.367	1.85
12.8	29.2	37.7	20.8	-1191.3	.0887	.504	.840	.378	.495	.341	.851	.834	.366	.374	.403	.428	.424	.445	.368	1.90
13.2	29.1	37.5	20.7	-1107.1	.0904	.504	.839	.379	.488	.344	.852	.836	.367	.373	.404	.431	.423	.443	.369	1.95
13.5	29.0	37.3	20.7	-1022.9	.0920	.504	.838	.384	.479	.346	.853	.838	.367	.371	.405	.435	.423	.441	.369	2.00
13.8	28.8	37.0	20.7	-933.5	.0876	.504	.844	.388	.475	.339	.851	.838	.365	.370	.406	.439	.423	.441	.368	2.05
14.1	28.7	36.8	20.7	-841.4	.0794	.504	.852	.385	.472	.339	.848	.839	.363	.367	.409	.443	.421	.442	.369	2.10
14.5	28.6	36.6	20.7	-749.5	.0706	.504	.858	.381	.469	.342	.844	.839	.360	.364	.412	.447	.419	.442	.370	2.15
14.8	28.5	36.4	20.8	-702.2	.0689	.504	.857	.383	.464	.350	.845	.837	.358	.360	.414	.450	.413	.441	.370	2.20
15.1	28.4	36.1	20.8	-811.3	.0744	.504	.854	.385	.464	.353	.849	.834	.357	.360	.413	.456	.411	.440	.371	2.25
15.5	28.3	35.8	20.8	-920.1	.0796	.504	.852	.387	.462	.352	.852	.831	.358	.360	.412	.461	.409	.439	.372	2.30
15.7	28.2	35.6	20.7	-1029.3	.0797	.504	.855	.385	.457	.346	.850	.834	.360	.361	.414	.466	.406	.440	.374	2.35
16.1	28.1	35.5	20.7	-967.8	.0752	.504	.856	.384	.454	.346	.850	.835	.361	.359	.418	.466	.407	.440	.373	2.40
16.4	28.0	35.3	20.7	-870.2	.0723	.504	.857	.386	.451	.350	.849	.835	.362	.358	.422	.464	.405	.439	.370	2.45

Set 4, Table C — Mean Values of All Quantities, Scaling Runs 39-41

MEAN VALUES OF ALL QUANTITIES

t (s)	$\bar{T}$ (°C)	$\bar{T}_e$ (°C)	$\bar{T}_p$ (°C)	β	β/θ	$\bar{X}$	Mean Pressurant Fractions at Locations I 1	2	3	4	5	6	7	8	9	10	11	12	13	τ
0.0	18.0	18.0	93.7	1.4	0.0000	0.000	0.000	0.000	0.000	0.000	0.000	0.000	0.000	0.000	0.000	0.000	0.000	0.000	0.000	0.00
1.0	19.2	19.2	29.3	72.8	2.4219	.023	-.519	-.393	-.543	-.577	-.583	-.501	-.346	.373	.083	.092	1.913	1.432	-.135	.05
1.3	20.1	20.1	25.0	82.5	5.6244	.046	-.525	-.267	-.559	-.631	-.648	-.483	-.206	.434	.189	.251	1.690	1.352	-.006	.10
1.6	21.1	21.0	23.2	74.8	7.8536	.069	-.450	-.110	-.387	-.519	-.555	-.376	-.072	.393	.236	.299	1.278	1.078	.076	.15
1.8	22.1	22.2	22.9	83.8	7.3972	.091	-.285	.087	.137	-.143	-.250	-.104	.029	.156	.189	.122	.675	.528	.047	.20
2.1	23.2	23.5	22.1	75.8	6.0439	.114	-.171	.215	.586	.148	-.013	.110	.073	-.030	.141	-.059	.326	.163	-.005	.25
2.4	24.3	24.9	21.3	47.6	4.1745	.137	-.104	.281	.944	.353	.157	.262	.069	-.159	.099	-.224	.197	-.030	-.065	.30
2.7	25.4	26.4	20.4	29.3	2.7152	.160	-.057	.296	1.014	.398	.213	.320	.085	-.155	.111	-.237	.188	-.048	-.048	.35
3.1	26.5	28.1	19.6	21.1	1.8381	.183	.003	.265	.765	.313	.189	.270	.130	-.011	.169	-.075	.229	.074	.055	.40
3.4	27.4	29.7	18.9	15.3	1.2362	.206	.065	.239	.540	.254	.181	.225	.172	.112	.218	.071	.262	.185	.150	.45
3.8	28.2	31.1	18.5	13.3	1.0028	.228	.104	.248	.469	.235	.190	.221	.200	.176	.245	.146	.292	.249	.197	.50
4.3	28.9	32.4	18.4	13.0	.9277	.251	.126	.281	.487	.237	.205	.244	.216	.202	.262	.176	.325	.286	.217	.55
4.7	29.4	33.5	18.4	12.9	.8713	.274	.151	.322	.508	.240	.217	.259	.234	.225	.278	.206	.359	.326	.236	.60
5.3	29.8	34.6	18.6	12.9	.8173	.297	.181	.358	.522	.250	.239	.261	.253	.248	.295	.234	.388	.369	.259	.65
5.8	30.3	35.6	18.8	12.5	.7398	.319	.211	.386	.531	.265	.264	.275	.273	.269	.307	.260	.420	.407	.286	.70
6.5	30.6	36.6	19.1	12.2	.6803	.342	.243	.397	.557	.274	.274	.305	.291	.286	.318	.285	.464	.442	.315	.75
7.1	30.9	37.3	19.4	12.5	.6582	.365	.285	.416	.580	.297	.297	.315	.308	.306	.332	.303	.493	.474	.339	.80
7.9	30.9	38.1	19.7	12.7	.6172	.388	.311	.455	.601	.329	.329	.330	.327	.330	.346	.323	.514	.494	.357	.85
8.8	31.1	38.8	20.0	12.4	.5612	.410	.327	.477	.634	.359	.355	.357	.348	.352	.359	.343	.544	.504	.381	.90
9.7	31.0	39.1	20.4	46.3	.5400	.433	.363	.503	.650	.383	.367	.374	.359	.369	.379	.370	.576	.543	.401	.95
11.3	30.6	39.1	20.6	97.4	.2706	.456	.400	.500	.669	.417	.400	.391	.387	.404	.407	.413	.559	.556	.432	1.00
12.7	29.7	37.7	20.2	96.2	.1559	.456	.414	.472	.584	.415	.432	.414	.408	.425	.429	.441	.533	.527	.438	1.05
13.8	29.1	36.9	20.0	56.7	.1200	.456	.424	.483	.551	.432	.425	.415	.419	.425	.438	.446	.524	.512	.440	1.10
14.8	28.7	36.2	19.8	56.4	.0909	.456	.417	.477	.539	.418	.432	.418	.421	.428	.452	.465	.516	.507	.442	1.15
15.9	28.4	35.7	19.7	49.3	.0793	.456	.409	.465	.524	.427	.443	.425	.425	.431	.458	.469	.509	.499	.447	1.20
16.9	28.1	35.3	19.6	27.1	.0612	.456	.431	.466	.522	.434	.443	.427	.424	.430	.455	.475	.495	.488	.441	1.25
18.0	27.9	34.9	19.5	33.3	.0574	.456	.423	.465	.526	.444	.449	.440	.422	.427	.458	.474	.484	.480	.440	1.30
19.0	27.7	34.6	19.4	22.7	.0485	.456	.425	.465	.513	.442	.448	.437	.434	.427	.466	.481	.478	.475	.442	1.35
20.1	27.4	34.2	19.3	31.5	.0619	.456	.431	.473	.498	.446	.446	.431	.435	.432	.472	.487	.468	.471	.443	1.40
21.1	27.2	34.0	19.2	32.2	.0480	.456	.424	.477	.481	.459	.459	.430	.432	.434	.475	.491	.461	.466	.446	1.45
22.2	27.1	33.7	19.2	22.9	.0418	.456	.430	.469	.482	.446	.446	.446	.440	.435	.477	.495	.457	.462	.449	1.50
23.2	26.9	33.5	19.1	23.4	.0471	.456	.450	.455	.478	.450	.450	.431	.445	.437	.477	.502	.450	.462	.449	1.55
24.3	26.7	33.1	19.0	23.9	.0531	.456	.440	.448	.492	.456	.456	.417	.447	.437	.481	.507	.446	.458	.450	1.60
25.3	26.6	32.9	19.0	24.0	.0390	.456	.452	.478	.487	.459	.459	.422	.441	.433	.474	.502	.436	.446	.442	1.65
26.4	26.4	32.7	19.0	24.6	.0420	.456	.469	.469	.469	.469	.469	.427	.441	.434	.480	.511	.426	.437	.435	1.70
27.4	26.2	32.5	18.9	25.1	.0484	.456	.451	.451	.471	.471	.471	.439	.442	.440	.486	.521	.423	.432	.435	1.75
28.5	26.1	32.3	18.9	25.4	.0383	.456	.437	.437	.477	.473	.473	.448	.450	.439	.488	.526	.418	.429	.440	1.80
29.5	26.0	32.0	18.8	26.1	.0477	.456	.423	.426	.495	.476	.476	.456	.450	.437	.495	.522	.417	.430	.434	1.85
30.6	25.8	31.8	18.7	25.7	.0438	.456	.442	.464	.476	.476	.476	.451	.448	.434	.485	.518	.410	.425	.430	1.90
31.6	25.7	31.6	18.7	25.4	.0361	.456	.440	.465	.465	.466	.466	.444	.455	.443	.489	.531	.411	.425	.436	1.95
32.7	25.6	31.4	18.6	6.1	.0389	.456	.440	.451	.451	.466	.478	.446	.459	.445	.496	.530	.411	.426	.434	2.00
10.9	8.5	10.4	6.2	.4	.0239	.152	.149	.149	.149	.149	.149	.149	.160	.153	.174	.182	.133	.137	.139	2.05
11.2	8.5	10.4	6.2	.1	.0067	.152	.147	.147	.147	.147	.147	.147	.161	.157	.179	.184	.136	.136	.141	2.10
0.0	0.0	0.0	0.0	0.0	0.0000	0.000	0.000	0.000	0.000	0.000	0.000	0.000	0.000	0.000	0.000	0.000	0.000	0.000	0.000	2.15
0.0	0.0	0.0	0.0	0.0	0.0000	0.000	0.000	0.000	0.000	0.000	0.000	0.000	0.000	0.000	0.000	0.000	0.000	0.000	0.000	2.20
0.0	0.0	0.0	0.0	0.0	0.0000	0.000	0.000	0.000	0.000	0.000	0.000	0.000	0.000	0.000	0.000	0.000	0.000	0.000	0.000	2.25
0.0	0.0	0.0	0.0	0.0	0.0000	0.000	0.000	0.000	0.000	0.000	0.000	0.000	0.000	0.000	0.000	0.000	0.000	0.000	0.000	2.30
0.0	0.0	0.0	0.0	0.0	0.0000	0.000	0.000	0.000	0.000	0.000	0.000	0.000	0.000	0.000	0.000	0.000	0.000	0.000	0.000	2.35
0.0	0.0	0.0	0.0	0.0	0.0000	0.000	0.000	0.000	0.000	0.000	0.000	0.000	0.000	0.000	0.000	0.000	0.000	0.000	0.000	2.40
0.0	0.0	0.0	0.0	0.0	0.0000	0.000	0.000	0.000	0.000	0.000	0.000	0.000	0.000	0.000	0.000	0.000	0.000	0.000	0.000	2.45

Set 5, Table C — Mean Values of All Quantities, Scaling Runs 42-44

MEAN VALUES OF ALL QUANTITIES

t (s)	$\bar{T}$ (°C)	$\bar{T}_e$ (°C)	$\bar{T}_p$ (°C)	β	β/θ	$\bar{X}$	Mean Pressurant Fractions at Locations I: 1	2	3	4	5	6	7	8	9	10	11	12	13	τ
0.0	17.8	17.8	158.6	-.0	0.0000	0.000	0.000	0.000	0.000	0.000	0.000	0.000	0.000	0.000	0.000	0.000	0.000	0.000	0.000	0.00
1.4	18.9	18.9	20.3	10093.4	-2.2788	.024	-.213	.385	.346	-1.078	-1.078	-.869	.147	1.046	.313	.732	.541	.164	-.128	.05
1.9	20.0	20.0	20.3	2519.6	6.1105	.047	-.406	.788	.511	-2.142	-2.142	-1.718	.306	2.082	.624	1.496	1.108	.347	-.238	.10
2.3	21.1	21.2	19.7	119.9	6.6332	.071	-.304	.952	.472	-1.931	-1.969	-1.368	.185	1.968	.636	1.347	.950	.276	-.292	.15
2.6	22.1	22.6	19.1	77.9	4.6722	.094	-.212	.645	.507	-.884	-.968	-.593	.043	1.037	.414	.705	.496	.161	-.123	.20
3.0	23.2	23.9	18.5	42.6	2.9572	.118	-.146	.261	.570	.128	.020	.085	-.041	.104	.180	.098	.093	.087	.095	.25
3.5	24.3	25.4	17.7	28.6	2.0666	.142	-.056	.218	.573	.136	.083	.126	.070	.019	.149	.078	.102	.158	.184	.30
3.9	25.3	26.9	16.9	19.7	1.2309	.165	.038	.210	.488	.117	.105	.133	.116	.098	.176	.134	.150	.181	.199	.35
4.5	26.2	28.4	16.8	16.7	.9304	.189	.092	.254	.466	.124	.111	.140	.151	.140	.202	.169	.178	.206	.218	.40
5.0	26.9	29.7	16.9	15.8	.8909	.212	.127	.302	.471	.132	.128	.162	.175	.171	.231	.192	.202	.227	.238	.45
5.6	27.6	30.8	17.1	15.5	.8042	.236	.158	.318	.496	.162	.162	.198	.200	.196	.249	.207	.224	.242	.255	.50
6.3	28.1	31.8	17.4	15.4	.7463	.260	.184	.331	.522	.207	.207	.219	.227	.223	.262	.225	.245	.256	.268	.55
6.9	28.5	32.7	17.8	15.5	.7510	.283	.198	.364	.554	.242	.242	.242	.241	.247	.277	.247	.266	.277	.285	.60
7.7	28.8	33.5	18.1	15.2	.6358	.307	.242	.411	.571	.252	.252	.267	.264	.274	.291	.271	.286	.299	.308	.65
8.7	29.1	34.2	18.6	14.9	.5628	.330	.284	.433	.595	.269	.269	.284	.285	.303	.311	.298	.314	.318	.329	.70
9.7	29.2	34.8	19.0	15.2	.5341	.354	.318	.461	.615	.297	.297	.300	.310	.320	.335	.326	.337	.340	.344	.75
10.8	29.3	35.3	19.4	15.5	.5185	.378	.346	.484	.647	.325	.325	.325	.334	.343	.355	.346	.355	.361	.361	.80
12.0	29.2	35.5	19.7	16.1	.4996	.401	.365	.533	.681	.365	.344	.344	.354	.361	.375	.365	.371	.377	.376	.85
13.5	29.1	35.8	20.1	16.4	.4604	.425	.391	.559	.702	.392	.366	.366	.381	.388	.391	.389	.395	.401	.403	.90
15.0	29.0	35.8	20.5	-297.1	.4356	.448	.416	.589	.742	.417	.393	.393	.402	.398	.408	.421	.408	.419	.423	.95
17.0	28.6	35.5	20.8	-3169.7	.3617	.472	.457	.593	.775	.434	.434	.434	.416	.427	.427	.436	.430	.436	.434	1.00
18.8	28.7	35.7	20.8	-427.3	.0479	.472	.474	.543	.596	.464	.452	.442	.439	.445	.442	.460	.457	.461	.455	1.05
20.5	28.0	34.6	20.5	-609.8	.0848	.472	.464	.535	.559	.447	.441	.441	.447	.454	.455	.476	.465	.475	.471	1.10
22.4	27.6	34.0	20.4	-483.8	.0552	.472	.469	.507	.532	.483	.466	.428	.446	.449	.459	.485	.465	.477	.470	1.15
24.2	27.2	33.5	20.2	-578.6	.0571	.472	.477	.505	.503	.455	.455	.453	.446	.455	.470	.491	.467	.484	.471	1.20
25.9	26.9	33.1	20.0	-376.5	.0510	.472	.454	.527	.480	.454	.457	.430	.452	.456	.476	.508	.469	.489	.477	1.25
27.7	26.7	32.7	19.9	-337.2	.0405	.472	.475	.500	.481	.462	.464	.445	.444	.448	.478	.506	.464	.492	.474	1.30
29.5	26.5	32.4	19.8	-352.0	.0427	.472	.475	.475	.502	.449	.454	.449	.452	.448	.479	.521	.461	.480	.476	1.35
31.3	26.3	32.1	19.8	-114.4	.0294	.472	.457	.480	.482	.431	.470	.429	.446	.454	.490	.535	.465	.499	.494	1.40
33.1	26.1	31.7	19.7	-328.8	.0340	.472	.454	.477	.456	.460	.468	.437	.448	.451	.484	.535	.471	.501	.492	1.45
0.0	0.0	0.0	0.0	0.0	0.0000	0.000	0.000	0.000	0.000	0.000	0.000	0.000	0.000	0.000	0.000	0.000	0.000	0.000	0.000	1.50
0.0	0.0	0.0	0.0	0.0	0.0000	0.000	0.000	0.000	0.000	0.000	0.000	0.000	0.000	0.000	0.000	0.000	0.000	0.000	0.000	1.55
0.0	0.0	0.0	0.0	0.0	0.0000	0.000	0.000	0.000	0.000	0.000	0.000	0.000	0.000	0.000	0.000	0.000	0.000	0.000	0.000	1.60
0.0	0.0	0.0	0.0	0.0	0.0000	0.000	0.000	0.000	0.000	0.000	0.000	0.000	0.000	0.000	0.000	0.000	0.000	0.000	0.000	1.65
0.0	0.0	0.0	0.0	0.0	0.0000	0.000	0.000	0.000	0.000	0.000	0.000	0.000	0.000	0.000	0.000	0.000	0.000	0.000	0.000	1.70
0.0	0.0	0.0	0.0	0.0	0.0000	0.000	0.000	0.000	0.000	0.000	0.000	0.000	0.000	0.000	0.000	0.000	0.000	0.000	0.000	1.75
0.0	0.0	0.0	0.0	0.0	0.0000	0.000	0.000	0.000	0.000	0.000	0.000	0.000	0.000	0.000	0.000	0.000	0.000	0.000	0.000	1.80
0.0	0.0	0.0	0.0	0.0	0.0000	0.000	0.000	0.000	0.000	0.000	0.000	0.000	0.000	0.000	0.000	0.000	0.000	0.000	0.000	1.85
0.0	0.0	0.0	0.0	0.0	0.0000	0.000	0.000	0.000	0.000	0.000	0.000	0.000	0.000	0.000	0.000	0.000	0.000	0.000	0.000	1.90
0.0	0.0	0.0	0.0	0.0	0.0000	0.000	0.000	0.000	0.000	0.000	0.000	0.000	0.000	0.000	0.000	0.000	0.000	0.000	0.000	1.95
0.0	0.0	0.0	0.0	0.0	0.0000	0.000	0.000	0.000	0.000	0.000	0.000	0.000	0.000	0.000	0.000	0.000	0.000	0.000	0.000	2.00
0.0	0.0	0.0	0.0	0.0	0.0000	0.000	0.000	0.000	0.000	0.000	0.000	0.000	0.000	0.000	0.000	0.000	0.000	0.000	0.000	2.05
0.0	0.0	0.0	0.0	0.0	0.0000	0.000	0.000	0.000	0.000	0.000	0.000	0.000	0.000	0.000	0.000	0.000	0.000	0.000	0.000	2.10
0.0	0.0	0.0	0.0	0.0	0.0000	0.000	0.000	0.000	0.000	0.000	0.000	0.000	0.000	0.000	0.000	0.000	0.000	0.000	0.000	2.15
0.0	0.0	0.0	0.0	0.0	0.0000	0.000	0.000	0.000	0.000	0.000	0.000	0.000	0.000	0.000	0.000	0.000	0.000	0.000	0.000	2.20
0.0	0.0	0.0	0.0	0.0	0.0000	0.000	0.000	0.000	0.000	0.000	0.000	0.000	0.000	0.000	0.000	0.000	0.000	0.000	0.000	2.25
0.0	0.0	0.0	0.0	0.0	0.0000	0.000	0.000	0.000	0.000	0.000	0.000	0.000	0.000	0.000	0.000	0.000	0.000	0.000	0.000	2.30
0.0	0.0	0.0	0.0	0.0	0.0000	0.000	0.000	0.000	0.000	0.000	0.000	0.000	0.000	0.000	0.000	0.000	0.000	0.000	0.000	2.35
0.0	0.0	0.0	0.0	0.0	0.0000	0.000	0.000	0.000	0.000	0.000	0.000	0.000	0.000	0.000	0.000	0.000	0.000	0.000	0.000	2.40
0.0	0.0	0.0	0.0	0.0	0.0000	0.000	0.000	0.000	0.000	0.000	0.000	0.000	0.000	0.000	0.000	0.000	0.000	0.000	0.000	2.45

Set 6, Table C — Mean Values of All Quantities, Scaling Runs 45-47

MEAN VALUES OF ALL QUANTITIES

t (s)	$\bar{T}$ (°C)	$\bar{T}_o$ (°C)	$\bar{T}_p$ (°C)	β	β/θ	$\bar{X}$	Mean Pressurant Fractions at Locations I 1	2	3	4	5	6	7	8	9	10	11	12	13	τ
0.0	17.6	17.6	245.4	1.4	0.0000	0.000	0.000	0.000	0.000	0.000	0.000	0.000	0.000	0.000	0.000	0.000	0.000	0.000	0.000	0.00
1.6	18.8	18.7	20.6	388.2	5.9362	.024	-.094	.621	-.056	.614	.507	.456	-.052	-.521	-.374	-.448	-.334	-.060	-.107	.05
2.2	19.6	19.7	18.5	157.4	5.0566	.047	-.465	1.742	2.457	.395	-.070	.412	-.377	-.815	-.555	-.888	-.660	-.354	-.198	.10
2.8	20.4	20.8	16.2	81.9	2.3702	.071	-.539	2.984	3.244	.167	-.406	.167	-.458	-.727	-.566	-.857	-.604	-.361	-.129	.15
3.7	21.5	22.3	14.2	37.8	1.2225	.094	-.035	.215	.466	.084	.058	.096	.056	.042	.063	.017	.045	.060	.058	.20
4.3	22.4	23.6	13.0	30.1	.9335	.118	.008	.214	.435	.075	.073	.101	.090	.082	.117	.059	.099	.099	.101	.25
5.4	23.2	24.7	13.9	27.5	.8108	.141	.033	.245	.432	.096	.089	.126	.114	.116	.140	.094	.105	.128	.121	.30
6.4	23.8	25.6	14.3	26.6	.7205	.165	.077	.295	.460	.090	.093	.132	.133	.129	.162	.120	.136	.140	.149	.35
7.6	24.3	26.5	14.8	24.8	.6387	.188	.080	.235	.476	.139	.135	.150	.160	.156	.180	.150	.163	.162	.163	.40
8.6	24.6	27.1	15.3	25.3	.7034	.212	.131	.382	.497	.175	.149	.178	.180	.177	.192	.174	.177	.182	.182	.45
9.8	24.9	27.7	15.9	25.1	.5966	.235	.177	.423	.544	.163	.149	.188	.189	.198	.208	.191	.201	.210	.214	.50
11.2	25.1	28.1	16.4	25.3	.5091	.259	.207	.417	.586	.201	.187	.201	.215	.219	.225	.219	.224	.231	.230	.55
12.6	25.1	28.4	17.0	25.9	.5570	.282	.230	.460	.622	.228	.214	.228	.237	.240	.245	.240	.230	.249	.248	.60
14.2	25.1	28.6	17.5	25.4	.5278	.306	.268	.486	.635	.253	.238	.253	.255	.260	.266	.254	.270	.271	.266	.65
16.0	25.2	28.7	17.9	26.1	.4922	.329	.290	.536	.678	.274	.259	.274	.277	.282	.283	.274	.283	.269	.284	.70
17.8	25.1	28.9	18.4	25.5	.5118	.353	.312	.580	.724	.296	.281	.296	.305	.306	.298	.303	.305	.313	.317	.75
19.9	25.1	28.9	18.7	26.1	.4710	.377	.327	.553	.752	.322	.295	.311	.323	.329	.334	.333	.336	.332	.340	.80
22.3	25.0	28.9	19.1	26.4	.4198	.400	.340	.620	.780	.367	.306	.323	.344	.349	.356	.346	.358	.357	.355	.85
25.0	24.9	28.9	19.4	26.9	.3896	.424	.352	.669	.811	.405	.317	.335	.372	.372	.364	.369	.379	.379	.392	.90
28.0	24.8	28.8	19.8	27.9	.3972	.447	.392	.663	.837	.446	.353	.371	.393	.392	.392	.377	.395	.401	.399	.95
31.7	24.5	28.4	20.1	3877.9	.3276	.471	.438	.717	.877	.439	.399	.418	.398	.402	.402	.402	.410	.402	.410	1.00
0.0	0.0	0.0	0.0	0.0	0.0000	0.000	0.000	0.000	0.000	0.000	0.000	0.000	0.000	0.000	0.000	0.000	0.000	0.000	0.000	1.05
0.0	0.0	0.0	0.0	0.0	0.0000	0.000	0.000	0.000	0.000	0.000	0.000	0.000	0.000	0.000	0.000	0.000	0.000	0.000	0.000	1.10
0.0	0.0	0.0	0.0	0.0	0.0000	0.000	0.000	0.000	0.000	0.000	0.000	0.000	0.000	0.000	0.000	0.000	0.000	0.000	0.000	1.15
0.0	0.0	0.0	0.0	0.0	0.0000	0.000	0.000	0.000	0.000	0.000	0.000	0.000	0.000	0.000	0.000	0.000	0.000	0.000	0.000	1.20
0.0	0.0	0.0	0.0	0.0	0.0000	0.000	0.000	0.000	0.000	0.000	0.000	0.000	0.000	0.000	0.000	0.000	0.000	0.000	0.000	1.25
0.0	0.0	0.0	0.0	0.0	0.0000	0.000	0.000	0.000	0.000	0.000	0.000	0.000	0.000	0.000	0.000	0.000	0.000	0.000	0.000	1.30
0.0	0.0	0.0	0.0	0.0	0.0000	0.000	0.000	0.000	0.000	0.000	0.000	0.000	0.000	0.000	0.000	0.000	0.000	0.000	0.000	1.35
0.0	0.0	0.0	0.0	0.0	0.0000	0.000	0.000	0.000	0.000	0.000	0.000	0.000	0.000	0.000	0.000	0.000	0.000	0.000	0.000	1.40
0.0	0.0	0.0	0.0	0.0	0.0000	0.000	0.000	0.000	0.000	0.000	0.000	0.000	0.000	0.000	0.000	0.000	0.000	0.000	0.000	1.45
0.0	0.0	0.0	0.0	0.0	0.0000	0.000	0.000	0.000	0.000	0.000	0.000	0.000	0.000	0.000	0.000	0.000	0.000	0.000	0.000	1.50
0.0	0.0	0.0	0.0	0.0	0.0000	0.000	0.000	0.000	0.000	0.000	0.000	0.000	0.000	0.000	0.000	0.000	0.000	0.000	0.000	1.55
0.0	0.0	0.0	0.0	0.0	0.0000	0.000	0.000	0.000	0.000	0.000	0.000	0.000	0.000	0.000	0.000	0.000	0.000	0.000	0.000	1.60
0.0	0.0	0.0	0.0	0.0	0.0000	0.000	0.000	0.000	0.000	0.000	0.000	0.000	0.000	0.000	0.000	0.000	0.000	0.000	0.000	1.65
0.0	0.0	0.0	0.0	0.0	0.0000	0.000	0.000	0.000	0.000	0.000	0.000	0.000	0.000	0.000	0.000	0.000	0.000	0.000	0.000	1.70
0.0	0.0	0.0	0.0	0.0	0.0000	0.000	0.000	0.000	0.000	0.000	0.000	0.000	0.000	0.000	0.000	0.000	0.000	0.000	0.000	1.75
0.0	0.0	0.0	0.0	0.0	0.0000	0.000	0.000	0.000	0.000	0.000	0.000	0.000	0.000	0.000	0.000	0.000	0.000	0.000	0.000	1.80
0.0	0.0	0.0	0.0	0.0	0.0000	0.000	0.000	0.000	0.000	0.000	0.000	0.000	0.000	0.000	0.000	0.000	0.000	0.000	0.000	1.85
0.0	0.0	0.0	0.0	0.0	0.0000	0.000	0.000	0.000	0.000	0.000	0.000	0.000	0.000	0.000	0.000	0.000	0.000	0.000	0.000	1.90
0.0	0.0	0.0	0.0	0.0	0.0000	0.000	0.000	0.000	0.000	0.000	0.000	0.000	0.000	0.000	0.000	0.000	0.000	0.000	0.000	1.95
0.0	0.0	0.0	0.0	0.0	0.0000	0.000	0.000	0.000	0.000	0.000	0.000	0.000	0.000	0.000	0.000	0.000	0.000	0.000	0.000	2.00
0.0	0.0	0.0	0.0	0.0	0.0000	0.000	0.000	0.000	0.000	0.000	0.000	0.000	0.000	0.000	0.000	0.000	0.000	0.000	0.000	2.05
0.0	0.0	0.0	0.0	0.0	0.0000	0.000	0.000	0.000	0.000	0.000	0.000	0.000	0.000	0.000	0.000	0.000	0.000	0.000	0.000	2.10
0.0	0.0	0.0	0.0	0.0	0.0000	0.000	0.000	0.000	0.000	0.000	0.000	0.000	0.000	0.000	0.000	0.000	0.000	0.000	0.000	2.15
0.0	0.0	0.0	0.0	0.0	0.0000	0.000	0.000	0.000	0.000	0.000	0.000	0.000	0.000	0.000	0.000	0.000	0.000	0.000	0.000	2.20
0.0	0.0	0.0	0.0	0.0	0.0000	0.000	0.000	0.000	0.000	0.000	0.000	0.000	0.000	0.000	0.000	0.000	0.000	0.000	0.000	2.25
0.0	0.0	0.0	0.0	0.0	0.0000	0.000	0.000	0.000	0.000	0.000	0.000	0.000	0.000	0.000	0.000	0.000	0.000	0.000	0.000	2.30
0.0	0.0	0.0	0.0	0.0	0.0000	0.000	0.000	0.000	0.000	0.000	0.000	0.000	0.000	0.000	0.000	0.000	0.000	0.000	0.000	2.35
0.0	0.0	0.0	0.0	0.0	0.0000	0.000	0.000	0.000	0.000	0.000	0.000	0.000	0.000	0.000	0.000	0.000	0.000	0.000	0.000	2.40
0.0	0.0	0.0	0.0	0.0	0.0000	0.000	0.000	0.000	0.000	0.000	0.000	0.000	0.000	0.000	0.000	0.000	0.000	0.000	0.000	2.45

Set 7, Table C — Mean Values of All Quantities, Scaling Runs 48-50

MEAN VALUES OF ALL QUANTITIES

t (s)	$\bar{T}$ (°C)	$\bar{T}_s$ (°C)	$\bar{T}_p$ (°C)	β	$\lvert\beta/\theta\rvert$	$\bar{X}$	Mean Pressurant Fractions at Locations I 1	2	3	4	5	6	7	8	9	10	11	12	13	τ
0.0	20.1	20.1	258.2	2.9	0.0000	0.000	0.000	0.000	0.000	0.000	0.000	0.000	0.000	0.000	0.000	0.000	0.000	0.000	0.000	0.00
1.2	21.0	20.9	44.0	2920.5	9.5963	.024	.378	-.376	.435	.295	.308	.378	-.015	-.415	-.050	-.124	-.247	-.220	-.071	.05
1.9	22.1	22.1	23.5	241.4	7.5045	.048	.323	-.225	.294	.256	.263	.319	.076	-.458	.021	-.031	-.110	-.102	-.005	.10
2.6	23.2	23.5	19.7	77.5	2.8071	.072	.089	.047	.037	.113	.113	.133	.090	-.110	.107	.072	.090	.072	.080	.15
3.4	24.3	25.0	18.1	36.5	1.2028	.095	-.019	.069	.072	.114	.111	.109	.011	.431	.097	.039	.068	.059	.081	.20
4.3	25.3	26.2	17.9	31.0	.9514	.119	.091	.048	.137	.141	.085	.100	.065	.384	.112	.089	.101	.094	.104	.25
5.1	25.9	27.2	18.1	29.7	.9338	.143	.082	.097	.130	.146	.117	.133	.080	.402	.133	.127	.141	.143	.129	.30
6.0	26.5	28.1	18.5	28.0	.8735	.167	.120	.125	.146	.170	.127	.143	.107	.431	.156	.151	.167	.164	.162	.35
7.0	27.0	28.9	19.0	26.6	.7398	.191	.149	.131	.176	.178	.134	.149	.143	.463	.186	.189	.194	.196	.190	.40
8.2	27.4	29.4	19.5	27.5	.7018	.215	.176	.140	.175	.206	.164	.179	.168	.496	.218	.217	.220	.220	.207	.45
9.4	27.5	29.9	19.9	27.6	.7315	.238	.192	.176	.176	.207	.206	.222	.194	.527	.231	.243	.246	.246	.236	.50
10.5	27.7	30.2	20.5	27.2	.6246	.262	.229	.198	.213	.230	.221	.237	.212	.562	.247	.274	.277	.266	.252	.55
12.3	27.7	30.5	20.9	27.7	.5939	.286	.258	.209	.241	.257	.241	.258	.239	.594	.265	.281	.309	.289	.279	.60
14.0	27.7	30.6	21.3	28.6	.5932	.310	.276	.226	.247	.280	.280	.276	.267	.626	.300	.307	.327	.316	.303	.65
15.6	27.6	30.6	21.7	27.8	.5264	.334	.295	.252	.277	.287	.277	.295	.305	.658	.337	.332	.349	.350	.329	.70
17.8	27.5	30.6	22.0	29.4	.5251	.358	.319	.287	.287	.323	.323	.330	.316	.685	.356	.360	.359	.361	.348	.75
20.0	27.5	30.7	22.3	28.0	.4887	.382	.333	.302	.302	.339	.339	.346	.347	.723	.375	.397	.391	.390	.377	.80
22.3	27.4	30.5	22.5	29.1	.4444	.406	.369	.319	.310	.350	.350	.369	.377	.756	.413	.425	.419	.423	.407	.85
25.1	27.3	30.6	22.9	29.8	.4263	.429	.379	.317	.339	.358	.358	.379	.397	.801	.441	.467	.456	.453	.435	.90
28.3	27.1	30.4	23.2	31.0	.3942	.453	.428	.363	.363	.406	.384	.374	.419	.838	.452	.465	.467	.475	.458	.95
32.3	26.9	30.2	23.4	-1139.0	.3308	.477	.422	.354	.399	.399	.399	.467	.444	.872	.488	.503	.489	.498	.474	1.00
0.0	0.0	0.0	0.0	0.0	0.0000	0.000	0.000	0.000	0.000	0.000	0.000	0.000	0.000	0.000	0.000	0.000	0.000	0.000	0.000	1.05
0.0	0.0	0.0	0.0	0.0	0.0000	0.000	0.000	0.000	0.000	0.000	0.000	0.000	0.000	0.000	0.000	0.000	0.000	0.000	0.000	1.10
0.0	0.0	0.0	0.0	0.0	0.0000	0.000	0.000	0.000	0.000	0.000	0.000	0.000	0.000	0.000	0.000	0.000	0.000	0.000	0.000	1.15
0.0	0.0	0.0	0.0	0.0	0.0000	0.000	0.000	0.000	0.000	0.000	0.000	0.000	0.000	0.000	0.000	0.000	0.000	0.000	0.000	1.20
0.0	0.0	0.0	0.0	0.0	0.0000	0.000	0.000	0.000	0.000	0.000	0.000	0.000	0.000	0.000	0.000	0.000	0.000	0.000	0.000	1.25
0.0	0.0	0.0	0.0	0.0	0.0000	0.000	0.000	0.000	0.000	0.000	0.000	0.000	0.000	0.000	0.000	0.000	0.000	0.000	0.000	1.30
0.0	0.0	0.0	0.0	0.0	0.0000	0.000	0.000	0.000	0.000	0.000	0.000	0.000	0.000	0.000	0.000	0.000	0.000	0.000	0.000	1.35
0.0	0.0	0.0	0.0	0.0	0.0000	0.000	0.000	0.000	0.000	0.000	0.000	0.000	0.000	0.000	0.000	0.000	0.000	0.000	0.000	1.40
0.0	0.0	0.0	0.0	0.0	0.0000	0.000	0.000	0.000	0.000	0.000	0.000	0.000	0.000	0.000	0.000	0.000	0.000	0.000	0.000	1.45
0.0	0.0	0.0	0.0	0.0	0.0000	0.000	0.000	0.000	0.000	0.000	0.000	0.000	0.000	0.000	0.000	0.000	0.000	0.000	0.000	1.50
0.0	0.0	0.0	0.0	0.0	0.0000	0.000	0.000	0.000	0.000	0.000	0.000	0.000	0.000	0.000	0.000	0.000	0.000	0.000	0.000	1.55
0.0	0.0	0.0	0.0	0.0	0.0000	0.000	0.000	0.000	0.000	0.000	0.000	0.000	0.000	0.000	0.000	0.000	0.000	0.000	0.000	1.60
0.0	0.0	0.0	0.0	0.0	0.0000	0.000	0.000	0.000	0.000	0.000	0.000	0.000	0.000	0.000	0.000	0.000	0.000	0.000	0.000	1.65
0.0	0.0	0.0	0.0	0.0	0.0000	0.000	0.000	0.000	0.000	0.000	0.000	0.000	0.000	0.000	0.000	0.000	0.000	0.000	0.000	1.70
0.0	0.0	0.0	0.0	0.0	0.0000	0.000	0.000	0.000	0.000	0.000	0.000	0.000	0.000	0.000	0.000	0.000	0.000	0.000	0.000	1.75
0.0	0.0	0.0	0.0	0.0	0.0000	0.000	0.000	0.000	0.000	0.000	0.000	0.000	0.000	0.000	0.000	0.000	0.000	0.000	0.000	1.80
0.0	0.0	0.0	0.0	0.0	0.0000	0.000	0.000	0.000	0.000	0.000	0.000	0.000	0.000	0.000	0.000	0.000	0.000	0.000	0.000	1.85
0.0	0.0	0.0	0.0	0.0	0.0000	0.000	0.000	0.000	0.000	0.000	0.000	0.000	0.000	0.000	0.000	0.000	0.000	0.000	0.000	1.90
0.0	0.0	0.0	0.0	0.0	0.0000	0.000	0.000	0.000	0.000	0.000	0.000	0.000	0.000	0.000	0.000	0.000	0.000	0.000	0.000	1.95
0.0	0.0	0.0	0.0	0.0	0.0000	0.000	0.000	0.000	0.000	0.000	0.000	0.000	0.000	0.000	0.000	0.000	0.000	0.000	0.000	2.00
0.0	0.0	0.0	0.0	0.0	0.0000	0.000	0.000	0.000	0.000	0.000	0.000	0.000	0.000	0.000	0.000	0.000	0.000	0.000	0.000	2.05
0.0	0.0	0.0	0.0	0.0	0.0000	0.000	0.000	0.000	0.000	0.000	0.000	0.000	0.000	0.000	0.000	0.000	0.000	0.000	0.000	2.10
0.0	0.0	0.0	0.0	0.0	0.0000	0.000	0.000	0.000	0.000	0.000	0.000	0.000	0.000	0.000	0.000	0.000	0.000	0.000	0.000	2.15
0.0	0.0	0.0	0.0	0.0	0.0000	0.000	0.000	0.000	0.000	0.000	0.000	0.000	0.000	0.000	0.000	0.000	0.000	0.000	0.000	2.20
0.0	0.0	0.0	0.0	0.0	0.0000	0.000	0.000	0.000	0.000	0.000	0.000	0.000	0.000	0.000	0.000	0.000	0.000	0.000	0.000	2.25
0.0	0.0	0.0	0.0	0.0	0.0000	0.000	0.000	0.000	0.000	0.000	0.000	0.000	0.000	0.000	0.000	0.000	0.000	0.000	0.000	2.30
0.0	0.0	0.0	0.0	0.0	0.0000	0.000	0.000	0.000	0.000	0.000	0.000	0.000	0.000	0.000	0.000	0.000	0.000	0.000	0.000	2.35
0.0	0.0	0.0	0.0	0.0	0.0000	0.000	0.000	0.000	0.000	0.000	0.000	0.000	0.000	0.000	0.000	0.000	0.000	0.000	0.000	2.40
0.0	0.0	0.0	0.0	0.0	0.0000	0.000	0.000	0.000	0.000	0.000	0.000	0.000	0.000	0.000	0.000	0.000	0.000	0.000	0.000	2.45

Set 8, Table C — Mean Values of All Quantities, Scaling Runs 51-53

MEAN VALUES OF ALL QUANTITIES

t (s)	$\bar{T}$ (°C)	$\bar{T}_s$ (°C)	$\bar{T}_p$ (°C)	β	β/θ	$\bar{X}$	Mean Pressurant Fractions at Locations 1													τ
							1	2	3	4	5	6	7	8	9	10	11	12	13	
0.0	22.8	22.8	104.8	3.2	0.0000	0.000	0.000	0.000	0.000	0.000	0.000	0.000	0.000	0.000	0.000	0.000	0.000	0.000	0.000	0.00
.8	23.9	23.9	45.0	316.0	4.9936	.024	.106	-.144	.003	-.194	.050	.106	-.037	.252	.211	.040	-.169	.118	-.031	.05
1.2	25.0	25.0	26.2	237.0	7.7647	.048	-.021	.114	.426	.022	-.140	-.021	.058	-.007	.172	-.064	-.215	.226	.077	.10
1.6	25.9	26.1	24.5	120.2	6.6129	.072	.029	.320	.609	.263	-.083	.038	.080	-.197	.060	-.185	-.206	.109	.101	.15
2.0	26.9	27.4	23.7	79.1	4.7368	.096	.164	.387	.557	.366	.078	.184	.063	-.213	-.005	-.214	-.188	-.045	.069	.20
2.4	27.9	28.7	22.9	44.3	3.0051	.120	.239	.391	.452	.391	.189	.271	.085	-.149	-.019	-.172	-.126	-.052	.058	.25
2.9	29.1	30.2	22.3	30.6	1.9786	.144	.186	.302	.351	.308	.163	.237	.141	.018	.069	-.043	-.007	.035	.110	.30
3.4	30.1	31.8	21.9	20.0	1.1569	.168	.149	.234	.280	.248	.145	.217	.187	.149	.146	.065	.095	.112	.157	.35
3.9	31.0	33.1	22.0	18.4	1.0182	.192	.174	.240	.274	.260	.169	.236	.214	.172	.181	.113	.129	.148	.184	.40
4.5	31.8	34.4	22.1	17.5	.9189	.216	.199	.246	.273	.271	.195	.252	.238	.196	.218	.160	.162	.185	.211	.45
5.1	32.4	35.6	22.5	16.5	.8095	.240	.234	.253	.279	.269	.223	.275	.256	.221	.243	.196	.203	.222	.243	.50
5.8	33.0	36.6	22.9	16.0	.7369	.264	.256	.277	.289	.293	.238	.289	.282	.251	.261	.228	.239	.254	.270	.55
6.6	33.5	37.6	23.3	15.8	.6900	.288	.283	.294	.294	.312	.263	.302	.306	.287	.283	.265	.271	.283	.298	.60
7.5	33.8	38.3	23.7	16.2	.6685	.312	.313	.308	.308	.308	.308	.331	.325	.315	.301	.300	.296	.312	.328	.65
8.3	33.9	38.9	24.1	16.5	.6478	.336	.299	.330	.343	.340	.340	.365	.346	.335	.332	.318	.331	.337	.343	.70
9.3	34.2	39.6	24.6	15.8	.6156	.360	.337	.320	.359	.359	.320	.401	.377	.369	.366	.357	.365	.373	.373	.75
10.4	34.3	40.0	25.1	15.8	.5435	.384	.371	.349	.359	.351	.349	.393	.403	.406	.395	.398	.405	.405	.407	.80
11.6	34.3	40.3	25.4	16.6	.5636	.408	.393	.370	.370	.370	.370	.397	.432	.430	.436	.428	.434	.433	.434	.85
13.0	34.2	40.5	25.8	17.0	.4813	.432	.411	.388	.388	.388	.388	.431	.454	.463	.451	.469	.460	.458	.460	.90
14.7	33.9	40.4	26.2	18.3	.4740	.456	.415	.403	.440	.409	.445	.485	.466	.478	.471	.474	.482	.479	.475	.95
17.3	33.3	39.7	26.3	13.6	.1594	.480	.464	.438	.438	.438	.438	.464	.493	.498	.498	.518	.516	.519	.514	1.00
19.2	32.4	38.3	25.8	4.5	.0894	.480	.477	.434	.453	.450	.461	.488	.489	.494	.481	.500	.506	.503	.503	1.05
21.1	31.8	37.5	25.5	4.3	.0686	.480	.467	.439	.439	.439	.439	.467	.497	.506	.488	.512	.513	.519	.514	1.10
22.9	31.4	36.9	25.3	4.0	.0592	.480	.468	.439	.439	.425	.452	.473	.504	.501	.496	.512	.509	.511	.511	1.15
24.8	31.0	36.4	25.2	3.4	.0569	.480	.486	.456	.456	.431	.456	.486	.497	.495	.482	.502	.491	.501	.499	1.20
26.6	30.8	36.1	25.1	1.8	.0259	.480	.473	.442	.442	.442	.442	.473	.506	.505	.496	.501	.506	.504	.500	1.25
28.5	30.5	35.6	24.9	5.4	.0700	.480	.465	.434	.434	.430	.434	.461	.513	.517	.499	.518	.507	.509	.516	1.30
30.3	30.3	35.3	24.8	1.2	.0375	.480	.489	.473	.469	.406	.433	.461	.496	.495	.497	.503	.496	.511	.508	1.35
32.2	30.0	34.9	24.8	3.4	.0566	.480	.492	.459	.459	.443	.459	.492	.490	.487	.493	.488	.481	.497	.496	1.40
22.4	20.3	23.4	16.8	1.0	.0533	.320	.325	.291	.291	.291	.291	.325	.339	.326	.331	.345	.325	.340	.335	1.45
0.0	0.0	0.0	0.0	0.0	0.0000	0.000	0.000	0.000	0.000	0.000	0.000	0.000	0.000	0.000	0.000	0.000	0.000	0.000	0.000	1.50
0.0	0.0	0.0	0.0	0.0	0.0000	0.000	0.000	0.000	0.000	0.000	0.000	0.000	0.000	0.000	0.000	0.000	0.000	0.000	0.000	1.55
0.0	0.0	0.0	0.0	0.0	0.0000	0.000	0.000	0.000	0.000	0.000	0.000	0.000	0.000	0.000	0.000	0.000	0.000	0.000	0.000	1.60
0.0	0.0	0.0	0.0	0.0	0.0000	0.000	0.000	0.000	0.000	0.000	0.000	0.000	0.000	0.000	0.000	0.000	0.000	0.000	0.000	1.65
0.0	0.0	0.0	0.0	0.0	0.0000	0.000	0.000	0.000	0.000	0.000	0.000	0.000	0.000	0.000	0.000	0.000	0.000	0.000	0.000	1.70
0.0	0.0	0.0	0.0	0.0	0.0000	0.000	0.000	0.000	0.000	0.000	0.000	0.000	0.000	0.000	0.000	0.000	0.000	0.000	0.000	1.75
0.0	0.0	0.0	0.0	0.0	0.0000	0.000	0.000	0.000	0.000	0.000	0.000	0.000	0.000	0.000	0.000	0.000	0.000	0.000	0.000	1.80
0.0	0.0	0.0	0.0	0.0	0.0000	0.000	0.000	0.000	0.000	0.000	0.000	0.000	0.000	0.000	0.000	0.000	0.000	0.000	0.000	1.85
0.0	0.0	0.0	0.0	0.0	0.0000	0.000	0.000	0.000	0.000	0.000	0.000	0.000	0.000	0.000	0.000	0.000	0.000	0.000	0.000	1.90
0.0	0.0	0.0	0.0	0.0	0.0000	0.000	0.000	0.000	0.000	0.000	0.000	0.000	0.000	0.000	0.000	0.000	0.000	0.000	0.000	1.95
0.0	0.0	0.0	0.0	0.0	0.0000	0.000	0.000	0.000	0.000	0.000	0.000	0.000	0.000	0.000	0.000	0.000	0.000	0.000	0.000	2.00
0.0	0.0	0.0	0.0	0.0	0.0000	0.000	0.000	0.000	0.000	0.000	0.000	0.000	0.000	0.000	0.000	0.000	0.000	0.000	0.000	2.05
0.0	0.0	0.0	0.0	0.0	0.0000	0.000	0.000	0.000	0.000	0.000	0.000	0.000	0.000	0.000	0.000	0.000	0.000	0.000	0.000	2.10
0.0	0.0	0.0	0.0	0.0	0.0000	0.000	0.000	0.000	0.000	0.000	0.000	0.000	0.000	0.000	0.000	0.000	0.000	0.000	0.000	2.15
0.0	0.0	0.0	0.0	0.0	0.0000	0.000	0.000	0.000	0.000	0.000	0.000	0.000	0.000	0.000	0.000	0.000	0.000	0.000	0.000	2.20
0.0	0.0	0.0	0.0	0.0	0.0000	0.000	0.000	0.000	0.000	0.000	0.000	0.000	0.000	0.000	0.000	0.000	0.000	0.000	0.000	2.25
0.0	0.0	0.0	0.0	0.0	0.0000	0.000	0.000	0.000	0.000	0.000	0.000	0.000	0.000	0.000	0.000	0.000	0.000	0.000	0.000	2.30
0.0	0.0	0.0	0.0	0.0	0.0000	0.000	0.000	0.000	0.000	0.000	0.000	0.000	0.000	0.000	0.000	0.000	0.000	0.000	0.000	2.35
0.0	0.0	0.0	0.0	0.0	0.0000	0.000	0.000	0.000	0.000	0.000	0.000	0.000	0.000	0.000	0.000	0.000	0.000	0.000	0.000	2.40
0.0	0.0	0.0	0.0	0.0	0.0000	0.000	0.000	0.000	0.000	0.000	0.000	0.000	0.000	0.000	0.000	0.000	0.000	0.000	0.000	2.45

Set 9, Table C — Mean Values of All Quantities, Scaling Runs 54-56

MEAN VALUES OF ALL QUANTITIES

								Mean Pressurant Fractions at Locations I													
t (s)	$\bar{T}$ (°C)	$\bar{T}_p$ (°C)	$\bar{T}_s$ (°C)	β	β/θ	$\bar{X}$	1	2	3	4	5	6	7	8	9	10	11	12	13	τ
0.0	23.3	23.3	22.7	4.0	0.0000	0.000	0.000	0.000	0.000	0.000	0.000	0.000	0.000	0.000	0.000	0.000	0.000	0.000	0.000	0.00
.6	24.3	24.3	41.4	329.3	5.0310	.024	.152	.137	.365	.390	.163	.167	-.338	-.024	-.095	-.002	-.261	-.212	-.130	.05
.9	25.3	25.3	34.4	245.9	6.7569	.048	.209	.496	.959	1.000	.538	.246	-.466	-.444	-.339	-.336	-.493	-.455	-.289	.10
1.2	26.3	26.4	27.4	162.6	8.4820	.073	.266	.854	1.553	1.611	.913	.326	-.594	-.863	-.583	-.671	-.724	-.698	-.448	.15
1.5	27.3	27.6	24.3	95.4	8.5729	.097	.348	1.177	2.046	2.066	1.207	.428	-.730	-1.178	-.788	-.904	-.936	-.895	-.584	.20
1.8	28.3	29.1	23.9	72.0	6.5359	.121	.277	.895	1.552	1.551	.915	.383	-.501	-.807	-.505	-.615	-.616	-.589	-.369	.25
2.1	29.4	30.5	23.6	47.6	4.3920	.145	.197	.585	1.011	.988	.593	.329	-.250	-.405	-.198	-.302	-.269	-.257	-.137	.30
2.4	30.5	32.0	23.4	27.3	2.5019	.169	.116	.277	.470	.447	.282	.268	.005	-.010	.103	.005	.075	.066	.094	.35
2.8	31.6	33.6	23.4	21.0	1.8150	.193	.118	.219	.342	.336	.227	.243	.102	.111	.199	.114	.170	.163	.170	.40
3.2	32.6	35.2	23.3	16.3	1.3094	.217	.143	.215	.306	.321	.232	.230	.159	.172	.245	.178	.207	.210	.209	.45
3.6	33.5	36.8	23.3	13.9	1.0385	.242	.168	.219	.293	.307	.241	.237	.199	.223	.287	.224	.248	.252	.245	.50
4.1	34.3	38.2	23.6	13.2	.9270	.266	.199	.239	.302	.305	.254	.266	.222	.257	.319	.255	.283	.281	.275	.55
4.6	35.0	39.5	23.9	12.8	.8385	.290	.241	.261	.309	.313	.269	.285	.250	.287	.343	.290	.311	.306	.306	.60
5.2	35.5	40.7	24.3	12.6	.7666	.314	.284	.279	.320	.323	.288	.291	.283	.320	.358	.329	.338	.333	.338	.65
5.8	35.9	41.7	24.7	12.6	.7181	.338	.310	.307	.338	.344	.310	.310	.310	.347	.377	.353	.369	.362	.361	.70
6.5	36.2	42.6	25.1	12.9	.6885	.363	.337	.333	.355	.369	.338	.338	.332	.371	.399	.371	.396	.389	.382	.75
7.3	36.4	43.3	25.5	12.9	.6350	.387	.358	.357	.383	.384	.367	.367	.359	.398	.415	.407	.417	.412	.403	.80
8.2	36.7	44.1	25.9	12.5	.5644	.411	.394	.380	.381	.398	.396	.396	.383	.424	.432	.426	.447	.449	.441	.85
9.2	36.5	44.4	26.4	14.1	.5873	.435	.409	.406	.415	.417	.417	.417	.400	.454	.456	.462	.473	.468	.462	.90
10.4	36.3	44.4	26.7	14.5	.5311	.459	.421	.430	.451	.452	.452	.452	.441	.472	.471	.484	.485	.485	.473	.95
12.3	35.8	44.0	26.9	10.3	.2235	.483	.472	.452	.452	.472	.463	.463	.466	.507	.496	.507	.515	.513	.507	1.00
13.5	34.8	42.6	26.5	7.8	.1756	.483	.476	.452	.449	.470	.470	.453	.475	.509	.501	.493	.514	.514	.508	1.05
14.7	34.3	41.8	26.2	4.5	.0999	.483	.494	.457	.442	.461	.461	.461	.475	.511	.495	.497	.510	.514	.507	1.10
15.8	33.9	41.2	26.0	3.9	.0813	.483	.480	.464	.464	.473	.480	.467	.466	.506	.485	.490	.508	.504	.497	1.15
17.0	33.5	40.6	25.8	3.4	.0782	.483	.477	.464	.464	.477	.480	.475	.469	.506	.484	.489	.503	.498	.499	1.20
18.1	33.1	40.1	25.7	3.4	.0753	.483	.483	.462	.462	.467	.483	.467	.471	.506	.488	.487	.502	.507	.501	1.25
19.3	32.9	39.8	25.6	1.9	.0442	.483	.486	.462	.459	.470	.482	.450	.474	.510	.480	.497	.505	.501	.506	1.30
20.4	32.6	39.2	25.5	4.8	.0858	.483	.501	.477	.453	.477	.477	.453	.468	.504	.485	.486	.502	502	.498	1.35
21.6	32.4	38.9	25.3	1.1	.0460	.483	.489	.466	.454	.464	.464	.464	.483	.514	.483	.501	.508	.501	.493	1.40
22.7	32.1	38.6	25.2	3.0	.0611	.483	.475	.466	.457	.450	.468	.468	.483	.513	.492	.504	.504	.507	.498	1.45
23.9	32.0	38.3	25.2	1.9	.0370	.483	.472	.464	.446	.459	.473	.467	.479	.520	.489	.507	.506	.504	.500	1.50
25.1	31.7	38.0	25.1	2.1	.0562	.483	.484	.462	.442	.460	.482	.464	.480	.517	.490	.507	.502	.505	.491	1.55
26.3	31.6	37.6	25.0	3.4	.0571	.483	.483	.456	.446	.456	.483	.456	.476	.514	.495	.506	.509	.509	.498	1.60
27.4	31.5	37.5	25.0	.4	.0236	.483	.481	.453	.447	.468	.474	.458	.474	.514	.490	.507	.509	.509	.501	1.65
28.6	31.2	37.2	24.8	2.1	.0505	.483	.485	.457	.453	.462	.462	.461	.478	.512	.491	.512	.501	.511	.499	1.70
29.7	31.1	36.9	24.8	2.2	.0489	.483	.483	.454	.453	.454	.478	.454	.473	.515	.495	.501	.509	.511	.501	1.75
30.9	31.0	36.8	24.8	2.0	.0364	.483	.496	.468	.443	.468	.473	.453	.473	.518	.480	.508	.504	.498	.498	1.80
32.0	30.7	36.3	24.6	3.4	.0727	.483	.502	.473	.465	.461	.495	.450	.470	.503	.485	.503	.487	.495	.497	1.85
33.2	30.6	36.1	24.6	1.5	.0368	.483	.518	.488	.459	.480	.489	.465	.459	.502	.480	.488	.489	.483	.487	1.90
11.2	10.3	12.0	8.3	0.0	0.0000	.160	.169	.139	.139	.169	.169	.169	.149	.173	.160	.164	.166	.161	.159	1.95
0.0	0.0	0.0	0.0	0.0	0.0000	0.000	0.000	0.000	0.000	0.000	0.000	0.000	0.000	0.000	0.000	0.000	0.000	0.000	0.000	2.00
0.0	0.0	0.0	0.0	0.0	0.0000	0.000	0.000	0.000	0.000	0.000	0.000	0.000	0.000	0.000	0.000	0.000	0.000	0.000	0.000	2.05
0.0	0.0	0.0	0.0	0.0	0.0000	0.000	0.000	0.000	0.000	0.000	0.000	0.000	0.000	0.000	0.000	0.000	0.000	0.000	0.000	2.10
0.0	0.0	0.0	0.0	0.0	0.0000	0.000	0.000	0.000	0.000	0.000	0.000	0.000	0.000	0.000	0.000	0.000	0.000	0.000	0.000	2.15
0.0	0.0	0.0	0.0	0.0	0.0000	0.000	0.000	0.000	0.000	0.000	0.000	0.000	0.000	0.000	0.000	0.000	0.000	0.000	0.000	2.20
0.0	0.0	0.0	0.0	0.0	0.0000	0.000	0.000	0.000	0.000	0.000	0.000	0.000	0.000	0.000	0.000	0.000	0.000	0.000	0.000	2.25
0.0	0.0	0.0	0.0	0.0	0.0000	0.000	0.000	0.000	0.000	0.000	0.000	0.000	0.000	0.000	0.000	0.000	0.000	0.000	0.000	2.30
0.0	0.0	0.0	0.0	0.0	0.0000	0.000	0.000	0.000	0.000	0.000	0.000	0.000	0.000	0.000	0.000	0.000	0.000	0.000	0.000	2.35
0.0	0.0	0.0	0.0	0.0	0.0000	0.000	0.000	0.000	0.000	0.000	0.000	0.000	0.000	0.000	0.000	0.000	0.000	0.000	0.000	2.40
0.0	0.0	0.0	0.0	0.0	0.0000	0.000	0.000	0.000	0.000	0.000	0.000	0.000	0.000	0.000	0.000	0.000	0.000	0.000	0.000	2.45

Set 10, Table C — Mean Values of All Quantities, Scaling Runs 58-60

MEAN VALUES OF ALL QUANTITIES

t (s)	$\bar{T}$ (°C)	$\bar{T}_a$ (°C)	$\bar{T}_p$ (°C)	β	β/θ	$\bar{X}$	Mean Pressurant Fractions at Locations I 1	2	3	4	5	6	7	8	9	10	11	12	13	τ
0.0	20.4	20.4	63.5	2.5	0.0000	0.000	0.000	0.000	0.000	0.000	0.000	0.000	0.000	0.000	0.000	0.000	0.000	0.000	0.000	0.00
.2	20.7	20.8	51.4	11.1	.4045	.025	.009	.179	.046	.121	.013	.017	.022	-.046	-.001	-.023	-.016	-.006	.011	.05
.5	21.1	21.2	39.2	19.8	.8009	.050	.018	.358	.093	.242	.026	.035	.044	-.092	-.002	-.047	-.032	-.012	.021	.10
.7	21.8	22.0	32.0	27.0	1.8195	.075	.033	.398	.217	.424	.064	.094	.073	-.152	-.020	-.091	-.072	-.024	.033	.15
.9	22.7	23.0	27.3	33.6	3.1453	.100	.052	.370	.381	.635	.113	.175	.105	-.220	-.046	-.144	-.124	-.039	.045	.20
1.5	25.4	26.0	23.8	53.3	7.3772	.125	.229	.447	.869	.756	.379	.417	.105	-.352	-.247	-.439	-.257	-.102	.024	.25
1.7	26.7	27.6	23.7	52.1	7.8168	.150	.236	.435	.941	.810	.400	.461	.123	-.529	-.210	-.426	-.244	-.088	.044	.30
1.9	27.9	29.1	23.3	48.0	7.5210	.175	.245	.446	.927	.803	.403	.462	.138	-.448	-.143	-.367	-.196	-.062	.070	.35
2.0	29.0	30.8	23.3	41.2	6.6470	.200	.256	.437	.862	.755	.400	.453	.155	-.336	-.064	-.275	-.128	-.017	.103	.40
2.2	30.1	32.5	23.5	33.3	5.5442	.226	.267	.422	.777	.692	.397	.441	.171	-.211	.020	-.170	-.052	.035	.140	.45
2.4	31.3	34.2	23.6	25.5	4.4413	.250	.278	.406	.692	.628	.393	.428	.187	-.086	.104	-.065	.025	.087	.177	.50
2.5	32.4	35.9	23.8	17.9	3.3566	.275	.292	.391	.609	.567	.391	.416	.204	.036	.185	.037	.100	.138	.213	.55
2.8	33.5	37.7	24.0	13.8	2.5419	.300	.323	.385	.558	.538	.402	.418	.227	.118	.232	.110	.155	.187	.249	.60
3.0	34.5	39.6	24.2	11.4	1.9593	.325	.344	.389	.523	.519	.410	.429	.257	.184	.273	.173	.206	.236	.285	.65
3.3	35.5	41.6	24.5	9.8	1.5360	.350	.362	.397	.495	.508	.416	.441	.291	.244	.312	.230	.256	.282	.320	.70
3.6	36.5	43.5	24.8	8.3	1.1461	.375	.378	.405	.468	.499	.424	.454	.325	.302	.350	.286	.305	.328	.354	.75
4.0	37.3	45.4	25.2	7.7	.9578	.401	.401	.419	.459	.498	.442	.472	.361	.349	.381	.332	.346	.362	.383	.80
4.4	38.0	47.2	25.6	7.4	.8477	.425	.431	.435	.460	.503	.463	.488	.399	.391	.410	.374	.384	.392	.400	.85
4.8	38.4	48.8	25.9	400.2	.7592	.450	.461	.454	.471	.511	.482	.507	.433	.431	.441	.413	.419	.421	.413	.90
5.4	38.6	49.9	26.2	1170.2	.6930	.476	.481	.475	.488	.523	.503	.523	.460	.462	.471	.444	.450	.451	.450	.95
6.7	38.2	50.0	26.3	827.8	.3479	.501	.504	.483	.483	.532	.511	.540	.482	.499	.497	.493	.494	.491	.496	1.00
7.0	37.7	49.4	26.1	703.3	.3012	.501	.507	.486	.482	.529	.514	.536	.484	.499	.496	.491	.494	.492	.495	1.05
7.3	37.3	48.7	25.9	578.8	.2544	.501	.511	.489	.480	.525	.517	.533	.487	.497	.495	.490	.494	.492	.495	1.10
7.6	36.9	48.1	25.7	454.3	.2076	.501	.515	.492	.479	.522	.520	.529	.490	.497	.494	.488	.494	.492	.495	1.15
7.9	36.6	47.6	25.6	390.8	.1846	.501	.513	.492	.483	.519	.524	.532	.489	.496	.492	.486	.494	.492	.493	1.20
8.2	36.3	47.1	25.4	351.0	.1724	.501	.512	.494	.489	.516	.527	.535	.487	.495	.490	.484	.493	.492	.492	1.25
8.5	35.9	46.7	25.2	311.2	.1603	.501	.512	.495	.495	.514	.530	.538	.485	.494	.488	.482	.492	.493	.491	1.30
8.8	35.7	46.3	25.1	284.4	.1495	.501	.513	.496	.496	.517	.528	.536	.485	.493	.485	.484	.491	.493	.491	1.35
9.2	35.5	46.0	25.0	267.2	.1326	.501	.513	.494	.495	.521	.526	.534	.486	.494	.485	.486	.490	.493	.492	1.40
9.5	35.3	45.7	24.9	250.0	.1158	.501	.514	.492	.492	.524	.524	.532	.487	.494	.484	.489	.489	.492	.492	1.45
9.8	35.1	45.4	24.8	235.5	.1016	.501	.519	.495	.490	.522	.522	.530	.487	.492	.485	.490	.489	.492	.492	1.50
10.1	34.9	45.2	24.8	237.9	.0988	.501	.521	.497	.487	.519	.519	.527	.487	.491	.487	.489	.491	.494	.495	1.55
10.4	34.8	44.9	24.6	241.3	.0973	.501	.523	.499	.483	.515	.515	.524	.489	.490	.490	.488	.494	.497	.498	1.60
10.7	34.6	44.7	24.5	244.6	.0984	.501	.522	.497	.480	.513	.513	.522	.490	.493	.490	.488	.499	.501	.500	1.65
11.0	34.4	44.5	24.5	219.8	.0933	.501	.520	.496	.479	.512	.512	.520	.489	.496	.490	.488	.500	.502	.503	1.70
11.3	34.3	44.3	24.4	192.8	.0860	.501	.519	.494	.477	.511	.511	.519	.487	.498	.490	.490	.500	.502	.506	1.75
11.6	34.2	44.1	24.4	165.9	.0801	.501	.518	.493	.476	.509	.509	.518	.485	.500	.491	.494	.500	.502	.511	1.80
11.9	34.1	43.8	24.3	147.6	.0754	.501	.517	.493	.476	.509	.509	.516	.483	.502	.492	.496	.500	.500	.513	1.85
12.3	34.0	43.7	24.2	134.5	.0735	.501	.519	.492	.475	.509	.509	.513	.484	.504	.493	.498	.501	.499	.513	1.90
12.6	33.8	43.5	24.2	121.4	.0716	.501	.521	.491	.474	.508	.508	.510	.486	.504	.494	.498	.500	.500	.511	1.95
12.9	33.7	43.3	24.2	127.5	.0732	.501	.525	.491	.473	.508	.508	.507	.489	.504	.496	.499	.495	.500	.508	2.00
13.2	33.5	43.1	24.1	158.2	.0793	.501	.527	.493	.475	.508	.510	.504	.490	.504	.498	.498	.498	.499	.505	2.05
13.5	33.4	42.8	24.0	189.0	.0826	.501	.527	.495	.477	.508	.513	.501	.490	.502	.498	.498	.498	.497	.503	2.10
13.8	33.3	42.7	23.9	209.3	.0838	.501	.527	.498	.480	.508	.515	.500	.490	.502	.498	.499	.497	.495	.500	2.15
14.2	33.2	42.5	23.9	180.0	.0748	.501	.523	.497	.479	.507	.514	.504	.489	.502	.498	.500	.498	.495	.500	2.20
14.5	33.1	42.3	23.8	149.4	.0698	.501	.520	.493	.478	.506	.517	.509	.488	.504	.498	.499	.500	.495	.499	2.25
14.8	33.0	42.2	23.8	118.7	.0653	.501	.517	.490	.478	.505	.520	.514	.486	.506	.497	.497	.503	.496	.499	2.30
15.1	32.9	42.0	23.7	129.7	.0685	.501	.514	.487	.478	.505	.523	.514	.485	.507	.496	.496	.504	.497	.500	2.35
15.4	32.8	41.8	23.7	148.6	.0723	.501	.511	.489	.478	.501	.520	.516	.488	.506	.498	.497	.502	.499	.502	2.40
15.7	32.6	41.6	23.6	167.4	.0754	.501	.508	.492	.477	.498	.517	.520	.490	.505	.499	.497	.500	.499	.504	2.45

Set 11, Table C — Mean Values of All Quantities, Scaling Runs 61-63

MEAN VALUES OF ALL QUANTITIES

t (s)	$\bar{T}$ (°C)	$\bar{T}_s$ (°C)	$\bar{T}_p$ (°C)	β	β/θ	$\bar{X}$	Mean Pressurant Fractions at Locations i: 1	2	3	4	5	6	7	8	9	10	11	12	13	τ
0.0	22.2	22.2	79.5	.7	0.0000	0.000	0.000	0.000	0.000	0.000	0.000	0.000	0.000	0.000	0.000	0.000	0.000	0.000	0.000	0.00
1.1	23.2	23.2	24.0	10700.8	6.3268	.024	1.798	1.889	1.795	1.758	1.825	2.153	.250	-4.633	-3.686	-1.193	-1.695	-.738	.795	.05
1.3	24.2	24.3	24.1	7993.3	6.9542	.049	1.447	1.647	1.666	1.574	1.501	1.989	.212	-3.720	-2.963	-1.151	-1.463	-.683	.580	.10
1.5	25.2	25.4	24.3	5277.8	7.5815	.073	1.096	1.406	1.538	1.389	1.177	1.824	.173	-2.804	-2.241	-1.109	-1.233	-.628	.366	.15
1.7	26.2	26.5	24.5	2562.3	8.2089	.098	.745	1.164	1.409	1.205	.852	1.659	.135	-1.888	-1.519	-1.067	-1.000	-.575	.151	.20
1.9	27.2	27.6	24.6	112.7	8.6468	.122	.388	.902	1.255	.999	.517	1.454	.101	-.948	-.774	-.595	-.747	-.505	-.058	.25
2.1	28.3	29.0	24.6	-57.5	7.4728	.147	.286	.745	1.123	.881	.387	1.200	.143	-.564	-.449	-.818	-.562	-.389	-.073	.30
2.3	29.4	30.5	24.6	47.1	6.1986	.171	.273	.654	.963	.771	.353	1.068	.170	-.391	-.299	-.611	-.416	-.280	-.029	.35
2.6	30.5	32.1	24.6	37.0	4.9229	.196	.260	.563	.802	.660	.319	.937	.197	-.217	-.147	-.403	-.270	-.170	.014	.40
2.8	31.6	33.7	24.6	26.9	3.6472	.220	.248	.471	.641	.550	.284	.806	.223	-.043	.004	-.196	-.123	-.060	.058	.45
3.0	32.6	35.3	24.6	18.0	2.5064	.245	.245	.404	.508	.465	.269	.711	.242	.100	.128	-.023	.002	.034	.096	.50
3.3	33.6	37.0	24.7	15.1	2.0178	.269	.269	.395	.479	.450	.289	.709	.262	.148	.170	.041	.066	.089	.140	.55
3.6	34.6	38.7	24.9	12.9	1.6181	.293	.295	.387	.457	.434	.307	.688	.286	.194	.208	.101	.126	.146	.186	.60
3.9	35.5	40.4	25.1	10.7	1.2184	.318	.320	.378	.435	.419	.324	.676	.311	.238	.246	.161	.187	.202	.233	.65
4.3	36.3	42.0	25.4	9.9	1.0335	.342	.343	.396	.433	.410	.335	.682	.337	.277	.277	.211	.231	.244	.271	.70
4.8	37.1	43.6	25.8	9.6	.9087	.367	.365	.419	.433	.410	.349	.690	.363	.315	.307	.258	.273	.280	.306	.75
5.2	37.7	45.1	26.2	9.4	.8100	.391	.384	.436	.435	.422	.370	.703	.386	.347	.336	.301	.311	.315	.337	.80
5.8	38.1	46.4	26.5	9.4	.7448	.416	.404	.449	.444	.445	.400	.718	.405	.372	.364	.342	.346	.351	.362	.85
6.3	38.4	47.5	26.9	-524.7	.7084	.440	.432	.461	.455	.461	.421	.733	.426	.403	.394	.376	.381	.386	.392	.90
7.0	38.6	48.5	27.3	-1396.4	.6937	.465	.467	.470	.470	.470	.436	.749	.447	.438	.426	.405	.416	.420	.426	.95
8.0	38.4	48.8	27.5	-906.9	.4901	.489	.487	.487	.479	.479	.464	.747	.464	.470	.459	.458	.449	.456	.454	1.00
9.2	37.4	47.3	27.0	-598.7	.1981	.489	.497	.478	.475	.470	.475	.761	.464	.467	.451	.455	.459	.458	.459	1.05
9.8	36.8	46.5	26.7	-373.6	.1656	.489	.503	.479	.476	.466	.475	.764	.466	.468	.446	.453	.449	.455	.458	1.10
10.4	36.4	45.8	26.5	-355.0	.1449	.489	.499	.487	.480	.468	.473	.766	.468	.469	.446	.449	.445	.454	.454	1.15
11.0	36.0	45.3	26.3	-346.4	.1290	.489	.492	.488	.484	.479	.479	.768	.468	.467	.444	.443	.443	.455	.451	1.20
11.5	35.7	44.9	26.2	-261.6	.1097	.489	.486	.485	.485	.484	.485	.768	.468	.467	.442	.443	.443	.453	.451	1.25
12.1	35.6	44.5	26.0	-180.1	.0846	.489	.494	.482	.482	.475	.482	.773	.468	.466	.445	.445	.444	.450	.452	1.30
12.7	35.2	44.1	25.9	-181.1	.0881	.489	.495	.482	.478	.472	.478	.781	.468	.468	.445	.447	.444	.447	.451	1.35
13.2	34.9	43.7	25.8	-211.3	.0947	.489	.499	.488	.473	.473	.473	.787	.468	.469	.445	.447	.443	.446	.449	1.40
13.8	34.7	43.3	25.7	-174.8	.0847	.489	.497	.491	.481	.473	.473	.782	.466	.467	.446	.445	.442	.447	.450	1.45
14.4	34.5	43.1	25.6	-123.5	.0686	.489	.494	.493	.493	.474	.474	.776	.461	.465	.443	.444	.443	.448	.450	1.50
15.0	34.3	42.8	25.5	-135.4	.0653	.489	.490	.490	.490	.472	.472	.775	.461	.466	.444	.448	.444	.453	.455	1.55
15.6	34.1	42.5	25.4	-166.3	.0653	.489	.494	.484	.484	.466	.466	.773	.464	.466	.449	.450	.447	.459	.458	1.60
16.1	34.0	42.3	25.4	-155.5	.0602	.489	.505	.479	.479	.459	.467	.770	.464	.466	.450	.453	.448	.461	.458	1.65
16.7	33.8	42.1	25.3	-128.2	.0621	.489	.507	.476	.476	.459	.478	.768	.461	.468	.446	.456	.446	.460	.457	1.70
17.3	33.7	41.8	25.2	-120.7	.0597	.489	.501	.480	.478	.469	.487	.765	.460	.468	.442	.452	.443	.457	.455	1.75
17.8	33.6	41.6	25.1	-122.5	.0542	.489	.501	.496	.483	.474	.487	.762	.458	.467	.439	.446	.444	.454	.450	1.80
18.4	33.4	41.4	25.1	-124.2	.0582	.489	.499	.499	.479	.471	.479	.772	.456	.467	.441	.447	.445	.453	.450	1.85
19.0	33.3	41.2	25.0	-126.4	.0536	.489	.498	.493	.473	.471	.473	.776	.457	.467	.444	.453	.446	.454	.452	1.90
19.6	33.1	41.0	24.9	-128.1	.0523	.489	.505	.487	.478	.467	.467	.773	.460	.467	.445	.460	.442	.453	.452	1.95
20.1	33.0	40.7	24.9	-129.3	.0626	.489	.501	.492	.482	.462	.464	.771	.464	.470	.446	.462	.442	.453	.452	2.00
20.7	32.8	40.5	24.8	-112.8	.0640	.489	.501	.501	.478	.454	.472	.765	.466	.472	.444	.458	.443	.453	.451	2.05
21.3	32.7	40.3	24.8	-81.7	.0480	.489	.504	.504	.475	.452	.475	.761	.471	.469	.445	.454	.442	.453	.451	2.10
21.8	32.6	40.2	24.8	-83.3	.0390	.489	.500	.500	.479	.463	.479	.761	.472	.466	.446	.451	.440	.452	.451	2.15
22.4	32.5	40.0	24.7	-118.1	.0449	.489	.502	.502	.487	.466	.487	.760	.463	.465	.441	.450	.438	.450	.450	2.20
23.0	32.4	39.9	24.6	-122.2	.0532	.489	.504	.506	.484	.463	.483	.765	.461	.467	.438	.450	.440	.448	.451	2.25
23.6	32.3	39.7	24.5	-89.0	.0485	.489	.497	.506	.484	.469	.476	.766	.461	.469	.437	.452	.443	.447	.453	2.30
24.2	32.2	39.5	24.5	-84.0	.0406	.489	.496	.506	.484	.470	.470	.769	.462	.467	.438	.455	.440	.447	.454	2.35
24.7	32.1	39.4	24.5	-120.4	.0462	.489	.501	.516	.483	.462	.462	.766	.465	.467	.440	.457	.436	.449	.453	2.40
25.3	32.0	39.2	24.4	-131.0	.0556	.489	.505	.523	.480	.455	.468	.762	.464	.469	.438	.457	.437	.448	.453	2.45

Set 12, Table C — Mean Values of All Quantities, Scaling Runs 64-66

MEAN VALUES OF ALL QUANTITIES

t (s)	$\bar{T}$ (°C)	$\bar{T}_c$ (°C)	$\bar{T}_p$ (°C)	β	β/θ	$\bar{X}$	Mean Pressurant Fractions at Locations I 1	2	3	4	5	6	7	8	9	10	11	12	13	τ
0.0	21.4	21.4	92.3	2.8	0.0000	0.000	0.000	0.000	0.000	0.000	0.000	0.000	0.000	0.000	0.000	0.000	0.000	0.000	0.000	0.00
.8	22.5	22.5	41.4	16219.5	2.6749	.024	-.148	.052	.479	.052	.052	-.361	.208	-.247	.008	-.126	.087	.085	.170	.05
1.2	23.6	23.6	28.6	2769.8	7.6862	.048	-.292	.108	.962	.108	.108	-.720	.403	-.489	.003	-.249	.178	.173	.328	.10
1.5	24.7	24.8	23.6	132.1	7.5370	.072	-.254	.134	.970	.166	.114	-.628	.379	-.444	.039	-.230	.183	.175	.329	.15
1.8	25.7	26.2	23.0	94.7	5.8575	.096	-.163	.146	.831	.222	.130	-.414	.297	-.323	.079	-.170	.165	.156	.284	.20
2.1	26.8	27.5	22.3	57.2	4.1779	.119	-.071	.159	.692	.278	.147	-.200	.215	-.202	.120	-.110	.147	.137	.240	.25
2.4	27.8	28.9	21.7	35.6	3.0807	.143	.045	.158	.455	.279	.157	.033	.138	-.024	.158	.004	.141	.132	.196	.30
2.8	28.8	30.4	21.3	25.6	2.2322	.167	.115	.181	.316	.259	.166	.137	.127	.091	.188	.093	.163	.156	.179	.35
3.2	29.8	31.9	20.9	18.7	1.4372	.191	.154	.222	.266	.250	.186	.168	.149	.149	.211	.147	.194	.190	.198	.40
3.7	30.5	33.2	20.9	16.5	1.1027	.215	.187	.256	.265	.261	.196	.194	.173	.186	.232	.183	.221	.219	.220	.45
4.2	31.2	34.4	21.1	15.9	1.0047	.239	.216	.272	.281	.264	.206	.217	.202	.222	.254	.221	.253	.250	.245	.50
4.7	31.8	35.5	21.4	15.2	.9403	.263	.242	.281	.291	.271	.231	.242	.236	.256	.280	.256	.279	.278	.272	.55
5.3	32.3	36.5	21.8	14.9	.9149	.287	.261	.298	.301	.296	.250	.261	.267	.286	.310	.288	.303	.304	.300	.60
5.9	32.7	37.4	22.2	15.0	.8545	.311	.282	.312	.325	.312	.272	.282	.292	.316	.333	.319	.333	.328	.328	.65
6.6	32.9	38.1	22.7	15.0	.7423	.335	.316	.314	.343	.314	.306	.316	.316	.351	.354	.343	.364	.355	.354	.70
7.4	33.1	38.6	23.1	15.6	.7207	.358	.347	.337	.340	.337	.337	.347	.340	.376	.376	.374	.383	.382	.379	.75
8.3	33.1	39.0	23.4	16.1	.6907	.382	.370	.360	.360	.360	.360	.370	.363	.401	.400	.402	.411	.411	.399	.80
9.3	33.0	39.3	23.9	16.0	.6393	.406	.394	.383	.383	.383	.383	.394	.388	.426	.426	.424	.435	.434	.424	.85
10.4	33.0	39.6	24.3	16.2	.5805	.430	.414	.403	.403	.403	.403	.414	.414	.455	.448	.456	.469	.460	.448	.90
11.7	32.9	39.7	24.6	-391.1	.5336	.454	.439	.428	.419	.419	.419	.430	.450	.482	.479	.482	.491	.486	.473	.95
13.7	32.4	39.3	24.8	-1530.2	.2742	.478	.477	.443	.431	.431	.431	.443	.485	.516	.505	.512	.521	.514	.502	1.00
15.0	31.6	38.2	24.5	-853.3	.1339	.478	.470	.458	.458	.455	.455	.466	.478	.502	.488	.494	.493	.497	.492	1.05
16.3	31.0	37.3	24.2	-489.0	.1078	.478	.479	.458	.458	.454	.462	.475	.475	.504	.486	.488	.495	.493	.482	1.10
17.7	30.5	36.6	24.0	-350.7	.0816	.478	.492	.458	.458	.458	.479	.471	.471	.500	.481	.493	.492	.485	.472	1.15
19.0	30.2	36.1	23.8	-360.3	.0713	.478	.473	.460	.460	.460	.460	.473	.479	.505	.489	.490	.494	.488	.481	1.20
20.4	29.9	35.7	23.6	-260.7	.0635	.478	.473	.459	.477	.445	.445	.458	.477	.505	.498	.504	.497	.493	.480	1.25
21.7	29.7	35.3	23.6	-192.4	.0566	.478	.497	.471	.473	.454	.467	.457	.464	.502	.478	.496	.490	.482	.477	1.30
23.1	29.4	34.9	23.4	-350.2	.0604	.478	.495	.477	.465	.452	.465	.478	.472	.501	.476	.481	.490	.483	.475	1.35
24.5	29.2	34.6	23.3	-206.4	.0482	.478	.480	.466	.466	.466	.466	.480	.472	.494	.485	.490	.482	.481	.478	1.40
25.8	29.0	34.3	23.2	-211.8	.0455	.478	.480	.466	.466	.455	.455	.469	.468	.508	.479	.496	.497	.485	.487	1.45
27.1	28.8	34.0	23.1	-217.4	.0613	.478	.481	.493	.467	.434	.467	.447	.472	.506	.490	.492	.487	.490	.485	1.50
28.5	28.7	33.8	23.1	-104.9	.0233	.478	.498	.491	.483	.452	.483	.450	.455	.495	.476	.490	.477	.480	.480	1.55
29.8	28.5	33.5	23.0	-386.9	.0648	.478	.496	.481	.481	.477	.481	.461	.454	.494	.468	.482	.478	.481	.478	1.60
31.2	28.4	33.3	22.9	-38.8	.0322	.478	.487	.472	.472	.472	.472	.464	.464	.495	.474	.488	.479	.485	.486	1.65
32.5	28.2	33.1	22.9	-238.9	.0436	.478	.483	.467	.467	.462	.462	.477	.472	.503	.474	.487	.482	.485	.489	1.70
22.1	18.5	21.2	14.9	-246.4	.0317	.317	.341	.311	.311	.285	.305	.301	.317	.339	.319	.322	.318	.327	.327	1.75
11.3	9.3	11.0	7.5	.3	.0168	.159	.181	.165	.165	.148	.165	.164	.149	.168	.152	.153	.149	.156	.156	1.80
0.0	0.0	0.0	0.0	0.0	0.0000	0.000	0.000	0.000	0.000	0.000	0.000	0.000	0.000	0.000	0.000	0.000	0.000	0.000	0.000	1.85
0.0	0.0	0.0	0.0	0.0	0.0000	0.000	0.000	0.000	0.000	0.000	0.000	0.000	0.000	0.000	0.000	0.000	0.000	0.000	0.000	1.90
0.0	0.0	0.0	0.0	0.0	0.0000	0.000	0.000	0.000	0.000	0.000	0.000	0.000	0.000	0.000	0.000	0.000	0.000	0.000	0.000	1.95
0.0	0.0	0.0	0.0	0.0	0.0000	0.000	0.000	0.000	0.000	0.000	0.000	0.000	0.000	0.000	0.000	0.000	0.000	0.000	0.000	2.00
0.0	0.0	0.0	0.0	0.0	0.0000	0.000	0.000	0.000	0.000	0.000	0.000	0.000	0.000	0.000	0.000	0.000	0.000	0.000	0.000	2.05
0.0	0.0	0.0	0.0	0.0	0.0000	0.000	0.000	0.000	0.000	0.000	0.000	0.000	0.000	0.000	0.000	0.000	0.000	0.000	0.000	2.10
0.0	0.0	0.0	0.0	0.0	0.0000	0.000	0.000	0.000	0.000	0.000	0.000	0.000	0.000	0.000	0.000	0.000	0.000	0.000	0.000	2.15
0.0	0.0	0.0	0.0	0.0	0.0000	0.000	0.000	0.000	0.000	0.000	0.000	0.000	0.000	0.000	0.000	0.000	0.000	0.000	0.000	2.20
0.0	0.0	0.0	0.0	0.0	0.0000	0.000	0.000	0.000	0.000	0.000	0.000	0.000	0.000	0.000	0.000	0.000	0.000	0.000	0.000	2.25
0.0	0.0	0.0	0.0	0.0	0.0000	0.000	0.000	0.000	0.000	0.000	0.000	0.000	0.000	0.000	0.000	0.000	0.000	0.000	0.000	2.30
0.0	0.0	0.0	0.0	0.0	0.0000	0.000	0.000	0.000	0.000	0.000	0.000	0.000	0.000	0.000	0.000	0.000	0.000	0.000	0.000	2.35
0.0	0.0	0.0	0.0	0.0	0.0000	0.000	0.000	0.000	0.000	0.000	0.000	0.000	0.000	0.000	0.000	0.000	0.000	0.000	0.000	2.40
0.0	0.0	0.0	0.0	0.0	0.0000	0.000	0.000	0.000	0.000	0.000	0.000	0.000	0.000	0.000	0.000	0.000	0.000	0.000	0.000	2.45

Set 1, Table D — Standard Deviation of Mean Local Pressurant Fractions, Scaling Runs 23-31

Locations I

1	2	3	4	5	6	7	8	9	10	11	12	13	τ
0.000	0.000	0.000	0.000	0.000	0.000	0.000	0.000	0.000	0.000	0.000	0.000	0.000	0.00
2.221	1.710	4.169	2.014	2.248	1.535	1.258	3.911	2.041	2.532	1.926	.264	1.242	.05
2.939	2.463	6.441	3.676	2.189	1.641	.947	4.313	2.002	3.117	2.697	.355	.931	.10
3.688	3.095	8.313	4.400	2.407	2.130	.899	4.823	2.276	3.743	3.475	.536	.872	.15
2.631	2.100	5.931	3.189	1.782	1.691	.690	3.212	1.651	2.629	2.486	.443	.729	.20
1.422	1.012	3.474	1.697	.979	.951	.440	1.662	.915	1.399	1.311	.251	.430	.25
.489	.271	.377	.387	.245	.236	.200	.451	.321	.397	.336	.098	.146	.30
.187	.134	.420	.126	.104	.165	.123	.126	.092	.111	.096	.063	.045	.35
.145	.124	.285	.067	.085	.145	.084	.093	.075	.082	.071	.053	.048	.40
.126	.111	.132	.049	.071	.122	.050	.080	.061	.063	.073	.045	.047	.45
.109	.094	.120	.067	.076	.081	.048	.062	.054	.051	.059	.044	.040	.50
.082	.081	.081	.066	.070	.062	.051	.049	.050	.041	.050	.034	.036	.55
.047	.066	.084	.031	.039	.080	.041	.038	.027	.040	.048	.027	.039	.60
.074	.022	.072	.031	.040	.051	.034	.029	.034	.052	.038	.030	.034	.65
.051	.048	.060	.032	.040	.049	.035	.035	.037	.032	.042	.017	.023	.70
.044	.039	.049	.028	.028	.050	.033	.034	.042	.029	.032	.014	.034	.75
.028	.066	.061	.029	.029	.044	.025	.026	.039	.023	.033	.016	.019	.80
.034	.064	.035	.042	.040	.027	.027	.040	.023	.037	.033	.018	.010	.85
.058	.016	.034	.047	.054	.039	.029	.027	.033	.032	.032	.014	.022	.90
.058	.048	.052	.076	.032	.031	.032	.036	.025	.137	.025	.021	.034	.95
.074	.116	.126	.049	.069	.069	.044	.048	.035	.027	.035	.039	.044	1.00
.063	.072	.100	.070	.043	.043	.040	.041	.035	.026	.036	.035	.035	1.05
.075	.076	.053	.064	.051	.041	.047	.040	.034	.038	.034	.034	.028	1.10
.076	.057	.042	.061	.062	.084	.039	.052	.039	.037	.035	.029	.021	1.15
.077	.023	.037	.051	.043	.034	.036	.047	.050	.034	.033	.033	.025	1.20
.090	.066	.031	.059	.062	.044	.038	.057	.049	.043	.038	.036	.047	1.25
.079	.081	.044	.051	.061	.049	.033	.072	.057	.045	.050	.042	.030	1.30
.101	.070	.078	.058	.042	.066	.040	.058	.068	.049	.034	.051	.060	1.35
.102	.042	.081	.056	.043	.063	.041	.079	.043	.051	.050	.048	.045	1.40
.065	.062	.084	.039	.034	.045	.047	.050	.061	.059	.029	.036	.041	1.45
.069	.079	.046	.074	.080	.036	.048	.074	.067	.046	.047	.033	.058	1.50
.080	.079	.046	.071	.080	.052	.043	.071	.054	.047	.055	.058	.059	1.55
.092	.092	.071	.083	.082	.083	.060	.078	.049	.046	.066	.045	.052	1.60
.069	.058	.083	.050	.075	.070	.065	.078	.057	.040	.046	.039	.072	1.65
.465	.469	.483	.463	.463	.444	.426	.456	.510	.545	.441	.494	.464	1.70
.489	.478	.489	.489	.489	.462	.441	.477	.546	.584	.465	.523	.453	1.75
.294	.294	.355	.294	.355	.294	.278	.318	.352	.346	.300	.319	.278	1.80
.351	.276	.354	.276	.354	.276	.268	.330	.346	.368	.299	.300	.276	1.85
0.000	0.000	0.000	0.000	0.000	0.000	0.000	0.000	0.000	0.000	0.000	0.000	0.000	1.90
0.000	0.000	0.000	0.000	0.000	0.000	0.000	0.000	0.000	0.000	0.000	0.000	0.000	1.95
0.000	0.000	0.000	0.000	0.000	0.000	0.000	0.000	0.000	0.000	0.000	0.000	0.000	2.00
0.000	0.000	0.000	0.000	0.000	0.000	0.000	0.000	0.000	0.000	0.000	0.000	0.000	2.05
0.000	0.000	0.000	0.000	0.000	0.000	0.000	0.000	0.000	0.000	0.000	0.000	0.000	2.10
0.000	0.000	0.000	0.000	0.000	0.000	0.000	0.000	0.000	0.000	0.000	0.000	0.000	2.15
0.000	0.000	0.000	0.000	0.000	0.000	0.000	0.000	0.000	0.000	0.000	0.000	0.000	2.20
0.000	0.000	0.000	0.000	0.000	0.000	0.000	0.000	0.000	0.000	0.000	0.000	0.000	2.25
0.000	0.000	0.000	0.000	0.000	0.000	0.000	0.000	0.000	0.000	0.000	0.000	0.000	2.30
0.000	0.000	0.000	0.000	0.000	0.000	0.000	0.000	0.000	0.000	0.000	0.000	0.000	2.35
0.000	0.000	0.000	0.000	0.000	0.000	0.000	0.000	0.000	0.000	0.000	0.000	0.000	2.40
0.000	0.000	0.000	0.000	0.000	0.000	0.000	0.000	0.000	0.000	0.000	0.000	0.000	2.45

Set 2, Table D — Standard Deviation of Mean Local Pressurant Fractions, Scaling Runs 32-34

Locations I

1	2	3	4	5	6	7	8	9	10	11	12	13	τ
0.000	0.000	0.000	0.000	0.000	0.000	0.000	0.000	0.000	0.000	0.000	0.000	0.000	0.00
.624	1.330	1.555	1.767	1.208	.749	.207	3.198	1.177	1.266	1.030	.248	.098	.05
1.257	2.594	2.846	3.470	2.393	1.472	.393	6.282	2.230	2.427	1.998	.508	.177	.10
1.265	2.580	3.279	3.367	2.335	1.512	.446	6.229	2.282	2.577	2.008	.560	.148	.15
1.165	2.196	2.896	2.760	1.981	1.351	.493	5.187	1.967	2.260	1.813	.574	.109	.20
.997	1.566	2.044	1.981	1.510	1.083	.467	3.756	1.476	1.705	1.360	.519	.068	.25
.725	.919	1.126	1.158	.938	.719	.330	2.224	.901	1.067	.854	.355	.036	.30
.466	.277	.295	.342	.382	.375	.235	.695	.332	.439	.347	.197	.100	.35
.298	.108	.237	.035	.165	.227	.171	.062	.128	.213	.106	.090	.097	.40
.151	.116	.261	.068	.070	.132	.099	.089	.090	.159	.023	.023	.081	.45
.092	.079	.140	.056	.055	.088	.059	.043	.057	.103	.008	.037	.065	.50
.070	.061	.036	.030	.055	.064	.052	.018	.041	.073	.016	.038	.047	.55
.049	.038	.035	.051	.048	.040	.028	.003	.038	.026	.022	.033	.045	.60
.052	.023	.032	.052	.028	.043	.012	.008	.025	.017	.010	.023	.039	.65
.050	.019	.028	.044	.020	.053	.001	.010	.018	.025	.008	.021	.033	.70
.037	.019	.037	.036	.030	.051	.011	.008	.010	.015	.008	.021	.026	.75
.025	.019	.036	.028	.046	.026	.013	.004	.004	.010	.011	.009	.018	.80
.024	.023	.039	.022	.044	.021	.017	.010	.008	.010	.026	.005	.013	.85
.019	.031	.029	.015	.027	.039	.013	.015	.012	.009	.017	.005	.003	.90
.023	.030	.012	.028	.027	.058	.206	.020	.022	.022	.013	.014	.023	.95
.026	.025	.057	.027	.027	.026	.008	.006	.008	.005	.008	.009	.003	1.00
.043	.013	.028	.034	.031	.034	.009	.002	.007	.002	.006	.006	.004	1.05
.045	.010	.026	.038	.042	.036	.008	.005	.006	.002	.004	.009	.006	1.10
.026	.011	.031	.044	.058	.024	.020	.014	.008	.009	.002	.004	.008	1.15
.026	.026	.033	.050	.037	.026	.020	.014	.008	.011	.010	.007	.013	1.20
.043	.036	.030	.057	.018	.038	.013	.012	.005	.007	.018	.014	.020	1.25
.053	.034	.021	.064	.027	.036	.011	.013	.010	.005	.017	.015	.025	1.30
.050	.039	.017	.050	.039	.037	.017	.011	.010	.008	.009	.008	.023	1.35
.029	.024	.048	.043	.032	.041	.015	.006	.008	.009	.013	.009	.021	1.40
.018	.027	.056	.053	.032	.045	.013	.010	.009	.027	.019	.012	.024	1.45
.011	.040	.065	.061	.032	.030	.008	.016	.013	.039	.016	.019	.030	1.50
.034	.039	.069	.060	.032	.034	.002	.019	.016	.047	.023	.024	.032	1.55
.043	.041	.054	.041	.016	.043	.013	.015	.015	.045	.024	.024	.024	1.60
.036	.040	.047	.049	.006	.036	.010	.015	.014	.044	.019	.018	.014	1.65
.015	.049	.047	.080	.039	.015	.010	.012	.016	.045	.017	.014	.011	1.70
.023	.037	.018	.090	.043	.003	.011	.012	.015	.035	.019	.016	.004	1.75
.051	.007	.003	.084	.046	.002	.012	.010	.012	.031	.016	.019	0.000	1.80
.046	.014	.028	.056	.033	.022	.011	.006	.013	.033	.008	.022	.001	1.85
.036	.029	.044	.047	.016	.034	.009	.013	.016	.031	.005	.018	.007	1.90
.037	.048	.047	.051	.003	.038	.018	.023	.016	.029	.010	.015	.016	1.95
.046	.039	.040	.066	.017	.036	.021	.027	.023	.030	.008	.015	.014	2.00
.040	.021	.046	.059	.026	.021	.027	.036	.027	.038	.014	.023	.014	2.05
.045	.012	.055	.056	.015	.041	.034	.040	.034	.047	.017	.030	.020	2.10
.067	.013	.058	.064	.017	.042	.040	.046	.042	.048	.018	.027	.020	2.15
.084	.032	.062	.080	.032	.032	.052	.059	.044	.053	.026	.028	.018	2.20
.063	.033	.063	.081	.033	.015	.052	.051	.045	.050	.023	.029	.013	2.25
.038	.036	.057	.084	.036	.012	.049	.043	.047	.038	.020	.027	.013	2.30
.043	.030	.052	.066	.030	.014	.041	.048	.034	.030	.023	.023	.024	2.35
.046	.014	.046	.047	.014	.026	.039	.052	.027	.026	.024	.026	.034	2.40
.034	.012	.044	.046	.017	.034	.046	.047	.032	.020	.027	.029	.037	2.45

Set 3, Table D — Standard Deviation of Mean Local Pressurant Fractions, Scaling Runs 35-37

Locations I

1	2	3	4	5	6	7	8	9	10	11	12	13	τ
0.000	0.000	0.000	0.000	0.000	0.000	0.000	0.000	0.000	0.000	0.000	0.000	0.000	0.00
1.682	1.535	2.419	2.261	2.420	1.694	1.040	4.550	2.102	2.261	1.760	2.320	.189	.05
1.921	1.409	2.297	2.032	2.496	1.895	.868	4.245	2.054	2.258	1.706	2.119	.323	.10
2.234	1.285	2.178	1.804	2.635	2.162	.764	3.957	2.009	2.279	1.683	1.919	.968	.15
2.593	1.161	2.065	1.577	2.826	2.472	.756	3.687	1.970	2.325	1.692	1.721	1.215	.20
2.984	1.040	1.958	1.382	3.061	2.814	.847	3.441	1.935	2.393	1.733	1.525	1.342	.25
3.437	.755	1.775	.958	3.379	3.232	1.035	3.195	1.832	2.517	1.825	1.265	1.934	.30
3.923	.527	1.783	.623	3.743	3.697	1.260	3.098	1.874	2.747	2.004	1.080	2.306	.35
4.083	.345	1.701	.380	3.850	3.845	1.383	2.851	1.829	2.746	2.022	.904	2.446	.40
3.528	.200	1.296	.240	3.317	3.310	1.204	2.316	1.547	2.251	1.684	.751	2.038	.45
2.984	.078	.917	.145	2.803	2.790	1.024	1.819	1.287	1.779	1.361	.623	1.673	.50
2.440	.083	.543	.147	2.289	2.269	.844	1.323	1.030	1.307	1.041	.498	1.286	.55
1.860	.233	.119	.251	1.741	1.712	.647	.801	.709	.797	.670	.330	.886	.60
1.464	.332	.150	.355	1.373	1.340	.515	.470	.502	.451	.413	.224	.408	.65
1.361	.314	.119	.338	1.280	1.260	.483	.440	.487	.510	.347	.222	.324	.70
1.259	.298	.091	.322	1.203	1.182	.451	.413	.475	.531	.282	.221	.439	.75
1.165	.294	.068	.309	1.126	1.110	.432	.362	.439	.522	.229	.229	.378	.80
1.120	.276	.063	.326	1.097	1.070	.436	.364	.401	.450	.230	.221	.367	.85
1.074	.253	.065	.344	1.062	1.025	.440	.367	.363	.379	.231	.207	.351	.90
1.030	.251	.069	.347	1.024	.991	.400	.361	.341	.351	.235	.186	.328	.95
.986	.288	.214	.363	.977	.977	.311	.293	.274	.293	.245	.225	.272	1.00
.977	.274	.164	.371	.970	.970	.324	.311	.287	.300	.224	.204	.286	1.05
.985	.287	.169	.363	.981	.981	.324	.314	.294	.296	.231	.209	.285	1.10
.993	.300	.176	.355	.991	.991	.322	.318	.302	.292	.236	.215	.282	1.15
.999	.297	.172	.363	.999	.999	.329	.317	.302	.294	.235	.221	.290	1.20
1.006	.294	.175	.371	1.006	1.006	.337	.313	.300	.295	.231	.224	.298	1.25
1.013	.292	.178	.377	1.013	1.013	.346	.311	.299	.297	.228	.225	.305	1.30
1.023	.292	.185	.378	1.022	1.023	.349	.317	.299	.298	.233	.234	.304	1.35
1.037	.290	.193	.380	1.029	1.037	.349	.327	.300	.299	.243	.239	.302	1.40
1.047	.289	.201	.382	1.033	1.050	.346	.335	.300	.301	.251	.244	.300	1.45
1.053	.298	.207	.393	1.032	1.064	.342	.327	.299	.295	.256	.250	.304	1.50
1.059	.303	.211	.401	1.036	1.072	.342	.318	.299	.288	.260	.256	.311	1.55
1.068	.307	.217	.409	1.045	1.074	.343	.308	.301	.280	.264	.264	.318	1.60
1.077	.312	.227	.399	1.054	1.069	.342	.312	.303	.281	.266	.266	.316	1.65
1.083	.317	.238	.385	1.062	1.066	.341	.318	.304	.285	.267	.264	.312	1.70
1.083	.325	.245	.366	1.065	1.073	.342	.327	.304	.291	.268	.263	.310	1.75
1.081	.336	.250	.344	1.066	1.081	.344	.329	.312	.296	.265	.260	.313	1.80
1.079	.345	.255	.322	1.068	1.090	.345	.331	.321	.300	.264	.258	.316	1.85
1.084	.355	.260	.314	1.069	1.092	.343	.327	.328	.302	.265	.257	.319	1.90
1.089	.342	.265	.328	1.071	1.094	.341	.327	.327	.302	.266	.257	.325	1.95
1.096	.323	.269	.350	1.074	1.096	.338	.326	.326	.304	.265	.258	.331	2.00
1.091	.303	.280	.360	1.081	1.100	.334	.326	.324	.305	.266	.261	.335	2.05
1.081	.307	.291	.344	1.088	1.095	.333	.328	.319	.302	.271	.267	.334	2.10
1.071	.316	.301	.320	1.091	1.098	.332	.332	.312	.297	.279	.269	.330	2.15
1.071	.335	.313	.303	1.089	1.100	.332	.334	.304	.290	.283	.268	.323	2.20
1.080	.352	.322	.306	1.087	1.109	.331	.330	.304	.285	.282	.271	.320	2.25
1.088	.366	.329	.315	1.089	1.118	.330	.323	.307	.279	.281	.274	.318	2.30
1.091	.372	.333	.318	1.097	1.122	.330	.317	.315	.271	.281	.281	.319	2.35
1.088	.357	.329	.319	1.097	1.119	.328	.317	.317	.269	.286	.286	.322	2.40
1.084	.332	.319	.321	1.095	1.116	.325	.322	.315	.272	.293	.290	.330	2.45

Set 4, Table D — Standard Deviation of Mean Local Pressurant Fractions, Scaling Runs 39-41

Locations I

1	2	3	4	5	6	7	8	9	10	11	12	13	τ
0.000	0.000	0.000	0.000	0.000	0.000	0.000	0.000	0.000	0.000	0.000	0.000	0.000	0.00
1.042	1.132	.897	.856	.940	.986	1.078	.510	.267	.538	4.297	3.158	.629	.05
.679	.729	.956	.821	.896	.586	.792	.495	.470	.890	2.719	1.960	.657	.10
.486	.379	1.091	.993	.986	.449	.492	.611	.497	.933	1.560	1.201	.574	.15
.309	.104	.992	.928	.822	.466	.148	.591	.364	.690	.748	.857	.346	.20
.218	.058	.844	.659	.567	.423	.073	.451	.227	.496	.580	.671	.193	.25
.138	.076	1.008	.222	.207	.360	.115	.382	.130	.538	.153	.308	.215	.30
.151	.108	1.274	.286	.197	.411	.131	.514	.165	.694	.106	.366	.300	.35
.088	.057	.810	.179	.142	.244	.069	.329	.119	.438	.067	.223	.179	.40
.032	.032	.300	.019	.060	.090	.010	.109	.056	.152	.036	.064	.047	.45
.011	.035	.051	.056	.010	.061	.032	.024	.024	.013	.028	.030	.023	.50
.033	.023	.043	.043	.032	.042	.029	.034	.023	.014	.026	.035	.018	.55
.047	.039	.032	.026	.037	.039	.027	.035	.021	.014	.020	.039	.016	.60
.037	.024	.021	.025	.011	.043	.025	.030	.021	.017	.006	.046	.012	.65
.031	.026	.022	.033	.030	.023	.018	.022	.018	.022	.005	.051	.006	.70
.046	.021	.027	.030	.030	.038	.013	.018	.016	.023	.009	.047	.001	.75
.030	.006	.017	.013	.013	.021	.009	.017	.007	.006	.016	.023	.010	.80
.026	.047	.010	.009	.009	.008	.009	.008	.005	.005	.025	.012	.012	.85
.043	.027	.010	.009	.008	.005	.013	.007	.016	.011	.012	.008	.013	.90
.043	.051	.006	.014	.032	.012	.027	.014	.015	.006	.015	.024	.040	.95
.025	.019	.054	.060	.025	.031	.032	.021	.015	.021	.065	.042	.020	1.00
.014	.014	.018	.016	.048	.013	.010	.016	.001	.010	.030	.023	.015	1.05
.028	.029	.044	.041	.026	.036	.022	.037	.028	.034	.016	.020	.023	1.10
.035	.036	.038	.030	.013	.030	.013	.017	.027	.032	.020	.031	.025	1.15
.047	.043	.042	.010	.045	.016	.010	.009	.034	.019	.008	.027	.009	1.20
.036	.042	.024	.027	.010	.033	.019	.016	.028	.024	.016	.039	.016	1.25
.059	.048	.053	.008	.017	.016	.009	.018	.015	.018	.014	.038	.025	1.30
.066	.030	.047	.031	.047	.016	.021	.025	.028	.031	.017	.044	.038	1.35
.050	.017	.049	.025	.025	.050	.025	.024	.032	.026	.013	.043	.044	1.40
.048	.050	.061	.013	.013	.036	.018	.024	.029	.032	.003	.040	.038	1.45
.037	.073	.055	.019	.019	.019	.025	.023	.029	.030	.005	.036	.040	1.50
.056	.070	.049	.056	.056	.025	.027	.034	.039	.049	.007	.047	.048	1.55
.070	.071	.080	.044	.044	.028	.018	.030	.038	.052	.021	.055	.058	1.60
.052	.077	.063	.044	.044	.041	.014	.028	.050	.067	.035	.066	.058	1.65
.065	.065	.065	.065	.065	.014	.018	.033	.036	.062	.050	.077	.075	1.70
.076	.076	.038	.038	.038	.049	.009	.032	.035	.052	.033	.078	.057	1.75
.079	.079	.024	.013	.013	.052	.007	.035	.019	.038	.032	.078	.063	1.80
.081	.089	.072	.034	.034	.006	.013	.029	.021	.039	.045	.081	.070	1.85
.070	.072	.065	.065	.065	.047	.018	.038	.027	.034	.044	.088	.062	1.90
.095	.057	.057	.056	.055	.036	.025	.042	.030	.040	.034	.077	.056	1.95
.071	.065	.065	.032	.037	.040	.029	.036	.031	.039	.031	.072	.059	2.00
.462	.462	.462	.462	.462	.462	.496	.474	.540	.565	.413	.426	.430	2.05
.455	.455	.435	.455	.435	.455	.500	.486	.556	.571	.420	.421	.437	2.10
0.000	0.000	0.000	0.000	0.000	0.000	0.000	0.000	0.000	0.000	0.000	0.000	0.000	2.15
0.000	0.000	0.000	0.000	0.000	0.000	0.000	0.000	0.000	0.000	0.000	0.000	0.000	2.20
0.000	0.000	0.000	0.000	0.000	0.000	0.000	0.000	0.000	0.000	0.000	0.000	0.000	2.25
0.000	0.000	0.000	0.000	0.000	0.000	0.000	0.000	0.000	0.000	0.000	0.000	0.000	2.30
0.000	0.000	0.000	0.000	0.000	0.000	0.000	0.000	0.000	0.000	0.000	0.000	0.000	2.35
0.000	0.000	0.000	0.000	0.000	0.000	0.000	0.000	0.000	0.000	0.000	0.000	0.000	2.40
0.000	0.000	0.000	0.000	0.000	0.000	0.000	0.000	0.000	0.000	0.000	0.000	0.000	2.45

Set 5, Table D — Standard Deviation of Mean Local Pressurant Fractions, Scaling Runs 42-44

Locations I

1	2	3	4	5	6	7	8	9	10	11	12	13	r
0.000	0.000	0.000	0.000	0.000	0.000	0.000	0.000	0.000	0.000	0.000	0.000	0.000	0.00
.565	2.834	.776	4.261	4.261	1.602	.950	3.660	1.007	1.950	.999	.739	1.366	.05
1.157	5.687	1.576	8.480	8.480	3.176	1.989	7.295	2.037	3.999	2.111	1.480	2.688	.10
.774	4.408	1.102	7.060	7.074	2.777	1.677	5.891	1.609	3.363	1.849	1.271	1.978	.15
.330	2.012	.923	3.258	3.312	1.244	.960	2.677	.727	1.508	.820	.720	.906	.20
.061	.277	.084	.143	.055	.206	.341	.370	.134	.181	.136	.220	.232	.25
.036	.165	.185	.052	.057	.123	.121	.116	.043	.092	.102	.048	.010	.30
.045	.129	.162	.028	.023	.062	.080	.075	.038	.048	.076	.023	.012	.35
.073	.062	.050	.037	.037	.061	.031	.026	.028	.040	.054	.022	.020	.40
.065	.052	.058	.062	.069	.035	.039	.010	.011	.039	.039	.040	.033	.45
.053	.048	.030	.069	.069	.033	.011	.015	.008	.026	.025	.037	.020	.50
.042	.048	.046	.059	.059	.060	.012	.019	.008	.021	.010	.029	.012	.55
.028	.068	.043	.057	.057	.057	.012	.015	.005	.014	.012	.038	.014	.60
.008	.062	.007	.016	.016	.061	.016	.013	.015	.024	.018	.033	.014	.65
.018	.053	.025	.033	.033	.038	.015	.017	.001	.016	.018	.033	.018	.70
.021	.067	.051	.050	.050	.041	.007	.010	.015	.019	.015	.013	.008	.75
.020	.054	.038	.048	.048	.048	.009	.009	.014	.017	.015	.016	.007	.80
.016	.073	.011	.016	.049	.049	.014	.014	.008	.017	.023	.032	.016	.85
.036	.053	.004	.039	.042	.042	.016	.013	.003	.024	.021	.016	.010	.90
.071	.011	.058	.067	.014	.014	.014	.023	.014	.020	.024	.016	.020	.95
.024	.019	.065	.049	.049	.049	.012	.005	.014	.018	.003	.023	.009	1.00
.048	.049	.068	.041	.049	.056	.009	.021	.012	.023	.016	.016	.032	1.05
.026	.022	.059	.026	.044	.044	.008	.023	.030	.024	.003	.020	.008	1.10
.081	.020	.071	.052	.048	.053	.007	.013	.009	.019	.004	.015	.004	1.15
.030	.098	.057	.041	.041	.045	.011	.002	.010	.007	.006	.017	.010	1.20
.024	.031	.061	.024	.024	.053	.009	.004	.010	.018	.003	.010	.009	1.25
.058	.020	.098	.045	.051	.069	.017	.013	.027	.016	.010	.004	.008	1.30
.039	.039	.062	.040	.026	.040	.010	.016	.014	.018	.022	.017	.029	1.35
.042	.110	.063	.040	.051	.043	.019	.029	.027	.023	.031	.004	.028	1.40
.101	.066	.060	.038	.062	.037	.028	.035	.037	.026	.014	.010	.019	1.45
0.000	0.000	0.000	0.000	0.000	0.000	0.000	0.000	0.000	0.000	0.000	0.000	0.000	1.50
0.000	0.000	0.000	0.000	0.000	0.000	0.000	0.000	0.000	0.000	0.000	0.000	0.000	1.55
0.000	0.000	0.000	0.000	0.000	0.000	0.000	0.000	0.000	0.000	0.000	0.000	0.000	1.60
0.000	0.000	0.000	0.000	0.000	0.000	0.000	0.000	0.000	0.000	0.000	0.000	0.000	1.65
0.000	0.000	0.000	0.000	0.000	0.000	0.000	0.000	0.000	0.000	0.000	0.000	0.000	1.70
0.000	0.000	0.000	0.000	0.000	0.000	0.000	0.000	0.000	0.000	0.000	0.000	0.000	1.75
0.000	0.000	0.000	0.000	0.000	0.000	0.000	0.000	0.000	0.000	0.000	0.000	0.000	1.80
0.000	0.000	0.000	0.000	0.000	0.000	0.000	0.000	0.000	0.000	0.000	0.000	0.000	1.85
0.000	0.000	0.000	0.000	0.000	0.000	0.000	0.000	0.000	0.000	0.000	0.000	0.000	1.90
0.000	0.000	0.000	0.000	0.000	0.000	0.000	0.000	0.000	0.000	0.000	0.000	0.000	1.95
0.000	0.000	0.000	0.000	0.000	0.000	0.000	0.000	0.000	0.000	0.000	0.000	0.000	2.00
0.000	0.000	0.000	0.000	0.000	0.000	0.000	0.000	0.000	0.000	0.000	0.000	0.000	2.05
0.000	0.000	0.000	0.000	0.000	0.000	0.000	0.000	0.000	0.000	0.000	0.000	0.000	2.10
0.000	0.000	0.000	0.000	0.000	0.000	0.000	0.000	0.000	0.000	0.000	0.000	0.000	2.15
0.000	0.000	0.000	0.000	0.000	0.000	0.000	0.000	0.000	0.000	0.000	0.000	0.000	2.20
0.000	0.000	0.000	0.000	0.000	0.000	0.000	0.000	0.000	0.000	0.000	0.000	0.000	2.25
0.000	0.000	0.000	0.000	0.000	0.000	0.000	0.000	0.000	0.000	0.000	0.000	0.000	2.30
0.000	0.000	0.000	0.000	0.000	0.000	0.000	0.000	0.000	0.000	0.000	0.000	0.000	2.35
0.000	0.000	0.000	0.000	0.000	0.000	0.000	0.000	0.000	0.000	0.000	0.000	0.000	2.40
0.000	0.000	0.000	0.000	0.000	0.000	0.000	0.000	0.000	0.000	0.000	0.000	0.000	2.45

Set 6, Table D — Standard Deviation of Mean Local Pressurant Fractions, Scaling Runs 45-47

Locations I

1	2	3	4	5	6	7	8	9	10	11	12	13	τ
0.000	0.000	0.000	0.000	0.000	0.000	0.000	0.000	0.000	0.000	0.000	0.000	0.000	0.00
.503	.873	4.540	1.693	1.892	1.624	.508	.759	.337	.552	.513	.466	.301	.05
1.160	4.212	7.052	.444	1.761	.400	1.293	1.489	1.463	1.025	1.306	.930	.290	.10
1.357	5.141	8.461	.166	1.557	.166	1.406	2.077	1.816	2.408	1.752	1.091	.414	.15
.043	.045	.172	.042	.103	.036	.020	.006	.033	.035	.010	.008	.039	.20
.009	.036	.076	.042	.089	.049	.018	.016	.019	.014	.016	.032	.030	.25
.024	.032	.084	.030	.087	.032	.016	.021	.004	.025	.010	.032	.043	.30
.041	.085	.038	.056	.029	.045	.023	.008	.009	.013	.004	.004	.014	.35
.015	.020	.085	.042	.076	.034	.005	.011	.016	.015	.011	.012	.022	.40
.013	.063	.089	.054	.107	.048	.017	.014	.019	.012	.026	.013	.044	.45
.020	.013	.080	.023	.068	.067	.039	.032	.013	.024	.005	.017	.025	.50
.033	.074	.078	.037	.081	.037	.006	.018	.004	.013	.011	.022	.030	.55
.054	.084	.078	.037	.079	.037	.005	.011	.014	.013	.009	.015	.015	.60
.018	.079	.057	.031	.076	.031	.013	.019	.001	.026	.020	.029	.029	.65
.010	.098	.056	.037	.083	.037	.016	.023	.017	.014	.010	.010	.027	.70
.018	.055	.090	.033	.080	.033	.012	.027	.007	.027	.021	.020	.034	.75
.011	.059	.097	.013	.093	.046	.004	.021	.021	.021	.024	.023	.028	.80
.007	.073	.105	.046	.096	.046	.003	.028	.008	.021	.013	.024	.024	.85
.015	.011	.100	.096	.089	.037	.019	.016	.006	.032	.018	.025	.021	.90
.059	.065	.124	.058	.092	.055	.012	.008	.017	.012	.007	.011	.020	.95
.068	.068	.183	.048	.093	.056	.023	.025	.011	.014	.013	.025	.032	1.00
0.000	0.000	0.000	0.000	0.000	0.000	0.000	0.000	0.000	0.000	0.000	0.000	0.000	1.05
0.000	0.000	0.000	0.000	0.000	0.000	0.000	0.000	0.000	0.000	0.000	0.000	0.000	1.10
0.000	0.000	0.000	0.000	0.000	0.000	0.000	0.000	0.000	0.000	0.000	0.000	0.000	1.15
0.000	0.000	0.000	0.000	0.000	0.000	0.000	0.000	0.000	0.000	0.000	0.000	0.000	1.20
0.000	0.000	0.000	0.000	0.000	0.000	0.000	0.000	0.000	0.000	0.000	0.000	0.000	1.25
0.000	0.000	0.000	0.000	0.000	0.000	0.000	0.000	0.000	0.000	0.000	0.000	0.000	1.30
0.000	0.000	0.000	0.000	0.000	0.000	0.000	0.000	0.000	0.000	0.000	0.000	0.000	1.35
0.000	0.000	0.000	0.000	0.000	0.000	0.000	0.000	0.000	0.000	0.000	0.000	0.000	1.40
0.000	0.000	0.000	0.000	0.000	0.000	0.000	0.000	0.000	0.000	0.000	0.000	0.000	1.45
0.000	0.000	0.000	0.000	0.000	0.000	0.000	0.000	0.000	0.000	0.000	0.000	0.000	1.50
0.000	0.000	0.000	0.000	0.000	0.000	0.000	0.000	0.000	0.000	0.000	0.000	0.000	1.55
0.000	0.000	0.000	0.000	0.000	0.000	0.000	0.000	0.000	0.000	0.000	0.000	0.000	1.60
0.000	0.000	0.000	0.000	0.000	0.000	0.000	0.000	0.000	0.000	0.000	0.000	0.000	1.65
0.000	0.000	0.000	0.000	0.000	0.000	0.000	0.000	0.000	0.000	0.000	0.000	0.000	1.70
0.000	0.000	0.000	0.000	0.000	0.000	0.000	0.000	0.000	0.000	0.000	0.000	0.000	1.75
0.000	0.000	0.000	0.000	0.000	0.000	0.000	0.000	0.000	0.000	0.000	0.000	0.000	1.80
0.000	0.000	0.000	0.000	0.000	0.000	0.000	0.000	0.000	0.000	0.000	0.000	0.000	1.85
0.000	0.000	0.000	0.000	0.000	0.000	0.000	0.000	0.000	0.000	0.000	0.000	0.000	1.90
0.000	0.000	0.000	0.000	0.000	0.000	0.000	0.000	0.000	0.000	0.000	0.000	0.000	1.95
0.000	0.000	0.000	0.000	0.000	0.000	0.000	0.000	0.000	0.000	0.000	0.000	0.000	2.00
0.000	0.000	0.000	0.000	0.000	0.000	0.000	0.000	0.000	0.000	0.000	0.000	0.000	2.05
0.000	0.000	0.000	0.000	0.000	0.000	0.000	0.000	0.000	0.000	0.000	0.000	0.000	2.10
0.000	0.000	0.000	0.000	0.000	0.000	0.000	0.000	0.000	0.000	0.000	0.000	0.000	2.15
0.000	0.000	0.000	0.000	0.000	0.000	0.000	0.000	0.000	0.000	0.000	0.000	0.000	2.20
0.000	0.000	0.000	0.000	0.000	0.000	0.000	0.000	0.000	0.000	0.000	0.000	0.000	2.25
0.000	0.000	0.000	0.000	0.000	0.000	0.000	0.000	0.000	0.000	0.000	0.000	0.000	2.30
0.000	0.000	0.000	0.000	0.000	0.000	0.000	0.000	0.000	0.000	0.000	0.000	0.000	2.35
0.000	0.000	0.000	0.000	0.000	0.000	0.000	0.000	0.000	0.000	0.000	0.000	0.000	2.40
0.000	0.000	0.000	0.000	0.000	0.000	0.000	0.000	0.000	0.000	0.000	0.000	0.000	2.45

Set 7, Table D — Standard Deviation of Mean Local Pressurant Fractions, Scaling Runs 48-50

Locations I

1	2	3	4	5	6	7	8	9	10	11	12	13	τ
0.000	0.000	0.000	0.000	0.000	0.000	0.000	0.000	0.000	0.000	0.000	0.000	0.000	0.00
1.019	.920	.962	1.149	1.134	1.019	.289	1.151	.486	.373	.793	.834	.452	.05
.583	.629	.692	.839	.832	.743	.301	.696	.352	.360	.584	.621	.329	.10
.094	.032	.228	.163	.163	.120	.219	.370	.091	.140	.104	.123	.087	.15
.266	.019	.019	.107	.111	.064	.195	1.120	.084	.152	.080	.110	.057	.20
.110	.028	.038	.043	.111	.105	.091	.852	.084	.075	.084	.077	.061	.25
.173	.022	.072	.090	.055	.068	.117	.789	.078	.036	.057	.044	.035	.30
.115	.051	.034	.090	.053	.089	.098	.784	.091	.071	.044	.058	.040	.35
.129	.031	.031	.036	.116	.129	.077	.793	.081	.093	.045	.065	.049	.40
.138	.054	.045	.060	.136	.144	.086	.807	.078	.073	.057	.060	.054	.45
.096	.059	.059	.125	.122	.128	.075	.930	.071	.052	.043	.033	.035	.50
.099	.059	.065	.100	.080	.103	.094	.842	.063	.049	.054	.048	.054	.55
.099	.074	.071	.106	.071	.099	.067	.850	.070	.056	.046	.086	.074	.60
.104	.086	.060	.114	.114	.104	.088	.873	.084	.069	.042	.057	.057	.65
.110	.066	.079	.100	.079	.110	.081	.899	.073	.074	.051	.054	.049	.70
.108	.059	.059	.137	.137	.122	.089	.932	.079	.066	.046	.052	.029	.75
.110	.061	.061	.143	.145	.126	.090	.950	.087	.062	.027	.050	.049	.80
.150	.063	.063	.142	.142	.150	.097	.970	.068	.043	.039	.053	.044	.85
.162	.070	.020	.154	.154	.162	.100	.985	.083	.053	.032	.043	.034	.90
.069	.042	.042	.091	.130	.223	.140	1.003	.099	.093	.117	.111	.090	.95
.091	.026	.131	.116	.116	.157	.133	1.036	.124	.120	.104	.113	.103	1.00
0.000	0.000	0.000	0.000	0.000	0.000	0.000	0.000	0.000	0.000	0.000	0.000	0.000	1.05
0.000	0.000	0.000	0.000	0.000	0.000	0.000	0.000	0.000	0.000	0.000	0.000	0.000	1.10
0.000	0.000	0.000	0.000	0.000	0.000	0.000	0.000	0.000	0.000	0.000	0.000	0.000	1.15
0.000	0.000	0.000	0.000	0.000	0.000	0.000	0.000	0.000	0.000	0.000	0.000	0.000	1.20
0.000	0.000	0.000	0.000	0.000	0.000	0.000	0.000	0.000	0.000	0.000	0.000	0.000	1.25
0.000	0.000	0.000	0.000	0.000	0.000	0.000	0.000	0.000	0.000	0.000	0.000	0.000	1.30
0.000	0.000	0.000	0.000	0.000	0.000	0.000	0.000	0.000	0.000	0.000	0.000	0.000	1.35
0.000	0.000	0.000	0.000	0.000	0.000	0.000	0.000	0.000	0.000	0.000	0.000	0.000	1.40
0.000	0.000	0.000	0.000	0.000	0.000	0.000	0.000	0.000	0.000	0.000	0.000	0.000	1.45
0.000	0.000	0.000	0.000	0.000	0.000	0.000	0.000	0.000	0.000	0.000	0.000	0.000	1.50
0.000	0.000	0.000	0.000	0.000	0.000	0.000	0.000	0.000	0.000	0.000	0.000	0.000	1.55
0.000	0.000	0.000	0.000	0.000	0.000	0.000	0.000	0.000	0.000	0.000	0.000	0.000	1.60
0.000	0.000	0.000	0.000	0.000	0.000	0.000	0.000	0.000	0.000	0.000	0.000	0.000	1.65
0.000	0.000	0.000	0.000	0.000	0.000	0.000	0.000	0.000	0.000	0.000	0.000	0.000	1.70
0.000	0.000	0.000	0.000	0.000	0.000	0.000	0.000	0.000	0.000	0.000	0.000	0.000	1.75
0.000	0.000	0.000	0.000	0.000	0.000	0.000	0.000	0.000	0.000	0.000	0.000	0.000	1.80
0.000	0.000	0.000	0.000	0.000	0.000	0.000	0.000	0.000	0.000	0.000	0.000	0.000	1.85
0.000	0.000	0.000	0.000	0.000	0.000	0.000	0.000	0.000	0.000	0.000	0.000	0.000	1.90
0.000	0.000	0.000	0.000	0.000	0.000	0.000	0.000	0.000	0.000	0.000	0.000	0.000	1.95
0.000	0.000	0.000	0.000	0.000	0.000	0.000	0.000	0.000	0.000	0.000	0.000	0.000	2.00
0.000	0.000	0.000	0.000	0.000	0.000	0.000	0.000	0.000	0.000	0.000	0.000	0.000	2.05
0.000	0.000	0.000	0.000	0.000	0.000	0.000	0.000	0.000	0.000	0.000	0.000	0.000	2.10
0.000	0.000	0.000	0.000	0.000	0.000	0.000	0.000	0.000	0.000	0.000	0.000	0.000	2.15
0.000	0.000	0.000	0.000	0.000	0.000	0.000	0.000	0.000	0.000	0.000	0.000	0.000	2.20
0.000	0.000	0.000	0.000	0.000	0.000	0.000	0.000	0.000	0.000	0.000	0.000	0.000	2.25
0.000	0.000	0.000	0.000	0.000	0.000	0.000	0.000	0.000	0.000	0.000	0.000	0.000	2.30
0.000	0.000	0.000	0.000	0.000	0.000	0.000	0.000	0.000	0.000	0.000	0.000	0.000	2.35
0.000	0.000	0.000	0.000	0.000	0.000	0.000	0.000	0.000	0.000	0.000	0.000	0.000	2.40
0.000	0.000	0.000	0.000	0.000	0.000	0.000	0.000	0.000	0.000	0.000	0.000	0.000	2.45

Set 8, Table D — Standard Deviation of Mean Local Pressurant Fractions, Scaling Runs 51-53

Locations I

1	2	3	4	5	6	7	8	9	10	11	12	13	τ
0.000	0.000	0.000	0.000	0.000	0.000	0.000	0.000	0.000	0.000	0.000	0.000	0.000	0.00
.302	.718	1.026	.686	.642	.502	.316	.988	.435	.518	.306	.239	.399	.05
.272	.375	1.376	.521	.700	.272	.306	.745	.292	.938	.484	.444	.571	.10
.202	.047	.736	.121	.466	.184	.306	.223	.067	.455	.240	.309	.441	.15
.390	.410	.157	.347	.296	.357	.355	.430	.233	.163	.237	.257	.298	.20
.411	.545	.462	.545	.160	.392	.337	.627	.314	.425	.361	.283	.173	.25
.180	.274	.258	.270	.084	.226	.175	.294	.157	.207	.193	.171	.107	.30
.028	.066	.117	.068	.055	.109	.047	.048	.068	.043	.067	.084	.055	.35
.059	.044	.062	.040	.040	.098	.018	.020	.037	.033	.047	.053	.026	.40
.080	.038	.033	.036	.036	.081	.005	.023	.012	.018	.029	.032	.014	.45
.049	.008	.034	.039	.036	.044	.009	.024	.045	.010	.024	.017	.010	.50
.018	.018	.014	.031	.040	.051	.008	.019	.023	.004	.020	.015	.010	.55
.009	.021	.021	.035	.026	.051	.014	.025	.009	.004	.012	.017	.017	.60
.023	.012	.012	.012	.012	.022	.022	.005	.012	.020	.012	.006	.009	.65
.006	.006	.022	.025	.025	.014	.001	.004	.021	.011	.003	.017	.006	.70
.011	.022	.036	.076	.023	.005	.009	.015	.024	.022	.009	.027	.015	.75
.018	.015	.016	.014	.015	.038	.007	.005	.023	.014	.008	.017	.015	.80
.014	.019	.019	.019	.019	.002	.015	.010	.014	.011	.001	.008	.020	.85
.016	.017	.017	.017	.017	.044	.014	.015	.025	.008	.016	.036	.021	.90
.015	.028	.062	.043	.062	.015	.017	.017	.021	.004	.022	.022	.040	.95
.010	.028	.028	.028	.028	.010	.022	.017	.029	.004	.008	.027	.030	1.00
.005	.045	.033	.036	.033	.007	.016	.007	.017	.016	.018	.009	.026	1.05
.011	.032	.032	.032	.032	.011	.020	.001	.016	.020	.013	.031	.046	1.10
.031	.014	.014	.051	.008	.042	.013	.035	.004	.011	.015	.016	.031	1.15
.005	.039	.039	.036	.039	.005	.016	.013	.016	.030	.022	.042	.034	1.20
.009	.036	.036	.036	.036	.009	.020	.017	.033	.020	.013	.032	.023	1.25
.015	.033	.033	.038	.033	.009	.029	.030	.010	.030	.019	.045	.043	1.30
.061	.017	.026	.062	.074	.063	.011	.034	.012	.018	.021	.035	.020	1.35
.021	.031	.031	.061	.031	.021	.006	.018	.016	.024	.030	.041	.027	1.40
.479	.429	.429	.429	.429	.479	.500	.481	.488	.508	.484	.501	.495	1.45
0.000	0.000	0.000	0.000	0.000	0.000	0.000	0.000	0.000	0.000	0.000	0.000	0.000	1.50
0.000	0.000	0.000	0.000	0.000	0.000	0.000	0.000	0.000	0.000	0.000	0.000	0.000	1.55
0.000	0.000	0.000	0.000	0.000	0.000	0.000	0.000	0.000	0.000	0.000	0.000	0.000	1.60
0.000	0.000	0.000	0.000	0.000	0.000	0.000	0.000	0.000	0.000	0.000	0.000	0.000	1.65
0.000	0.000	0.000	0.000	0.000	0.000	0.000	0.000	0.000	0.000	0.000	0.000	0.000	1.70
0.000	0.000	0.000	0.000	0.000	0.000	0.000	0.000	0.000	0.000	0.000	0.000	0.000	1.75
0.000	0.000	0.000	0.000	0.000	0.000	0.000	0.000	0.000	0.000	0.000	0.000	0.000	1.80
0.000	0.000	0.000	0.000	0.000	0.000	0.000	0.000	0.000	0.000	0.000	0.000	0.000	1.85
0.000	0.000	0.000	0.000	0.000	0.000	0.000	0.000	0.000	0.000	0.000	0.000	0.000	1.90
0.000	0.000	0.000	0.000	0.000	0.000	0.000	0.000	0.000	0.000	0.000	0.000	0.000	1.95
0.000	0.000	0.000	0.000	0.000	0.000	0.000	0.000	0.000	0.000	0.000	0.000	0.000	2.00
0.000	0.000	0.000	0.000	0.000	0.000	0.000	0.000	0.000	0.000	0.000	0.000	0.000	2.05
0.000	0.000	0.000	0.000	0.000	0.000	0.000	0.000	0.000	0.000	0.000	0.000	0.000	2.10
0.000	0.000	0.000	0.000	0.000	0.000	0.000	0.000	0.000	0.000	0.000	0.000	0.000	2.15
0.000	0.000	0.000	0.000	0.000	0.000	0.000	0.000	0.000	0.000	0.000	0.000	0.000	2.20
0.000	0.000	0.000	0.000	0.000	0.000	0.000	0.000	0.000	0.000	0.000	0.000	0.000	2.25
0.000	0.000	0.000	0.000	0.000	0.000	0.000	0.000	0.000	0.000	0.000	0.000	0.000	2.30
0.000	0.000	0.000	0.000	0.000	0.000	0.000	0.000	0.000	0.000	0.000	0.000	0.000	2.35
0.000	0.000	0.000	0.000	0.000	0.000	0.000	0.000	0.000	0.000	0.000	0.000	0.000	2.40
0.000	0.000	0.000	0.000	0.000	0.000	0.000	0.000	0.000	0.000	0.000	0.000	0.000	2.45

Set 9, Table D — Standard Deviation of Mean Local Pressurant Fractions, Scaling Runs 54-56

Locations I

1	2	3	4	5	6	7	8	9	10	11	12	13	τ
0.000	0.000	0.000	0.000	0.000	0.000	0.000	0.000	0.000	0.000	0.000	0.000	0.000	0.00
.221	1.017	1.444	1.454	1.038	.230	.489	1.384	.809	1.116	.665	.667	.482	.05
.491	1.597	2.446	2.432	1.588	.452	.976	1.818	1.310	1.389	1.373	1.279	.913	.10
.803	2.228	3.496	3.438	2.171	.720	1.588	2.346	1.835	1.732	2.081	1.894	1.346	.15
1.093	2.921	4.684	4.461	2.876	.968	2.207	3.071	2.426	2.259	2.818	2.373	1.812	.20
.752	2.117	3.379	3.343	2.046	.713	1.602	2.218	1.727	1.610	2.012	1.861	1.300	.25
.382	1.231	1.936	1.888	1.133	.434	.936	1.273	.959	.892	1.124	1.075	.734	.30
.015	.346	.453	.403	.207	.167	.276	.319	.186	.167	.232	.275	.168	.35
.048	.134	.162	.082	.022	.090	.125	.089	.020	.022	.043	.090	.046	.40
.040	.079	.109	.040	.014	.057	.089	.043	.011	.025	.022	.053	.027	.45
.027	.048	.055	.015	.023	.028	.048	.029	.020	.036	.014	.029	.012	.50
.028	.049	.042	.034	.028	.037	.030	.028	.026	.031	.024	.031	.010	.55
.042	.049	.044	.016	.032	.042	.021	.020	.032	.032	.025	.030	.011	.60
.038	.043	.058	.034	.032	.026	.036	.013	.020	.039	.010	.025	.027	.65
.022	.016	.044	.045	.022	.022	.029	.013	.017	.028	.015	.027	.022	.70
.021	.034	.030	.028	.023	.023	.024	.007	.017	.002	.034	.027	.009	.75
.025	.064	.024	.036	.012	.012	.017	.007	.006	.023	.038	.018	.011	.80
.022	.039	.040	.019	.020	.020	.024	.007	.011	.009	.023	.011	.014	.85
.025	.064	.068	.024	.024	.024	.003	.001	.020	.011	.041	.026	.006	.90
.027	.076	.053	.044	.044	.044	.024	.025	.021	.004	.024	.029	.016	.95
.022	.042	.042	.022	.035	.035	.020	.017	.018	.038	.022	.009	.015	1.00
.018	.067	.066	.025	.025	.031	.032	.017	.017	.009	.037	.014	.025	1.05
.045	.073	.051	.016	.016	.016	.038	.004	.007	.029	.029	.007	.009	1.10
.029	.047	.047	.010	.013	.028	.036	.003	.008	.029	.023	.011	.018	1.15
.027	.065	.065	.027	.031	.025	.037	.017	.018	.014	.040	.023	.029	1.20
.008	.075	.075	.042	.008	.042	.039	.010	.006	.017	.035	.028	.033	1.25
.013	.059	.056	.014	.023	.044	.020	.021	.010	.022	.015	.027	.037	1.30
.042	.070	.031	.053	.054	.030	.042	.029	.025	.032	.031	.016	.029	1.35
.036	.081	.059	.047	.047	.047	.009	.032	.020	.027	.040	.018	.017	1.40
.030	.095	.083	.054	.019	.019	.004	.027	.020	.026	.044	.020	.025	1.45
.022	.097	.088	.029	.011	.018	.012	.047	.030	.029	.044	.027	.023	1.50
.034	.053	.110	.020	.018	.025	.005	.040	.026	.032	.042	.022	.011	1.55
.041	.040	.067	.040	.041	.040	.007	.035	.017	.024	.023	.021	.016	1.60
.024	.056	.048	.021	.036	.019	.024	.033	.017	.023	.041	.011	.011	1.65
.034	.088	.079	.042	.042	.039	.027	.026	.024	.009	.035	.010	.010	1.70
.038	.086	.093	.050	.031	.050	.029	.019	.017	.005	.040	.023	.021	1.75
.079	.030	.082	.030	.030	.009	.041	.017	.020	.026	.060	.028	.025	1.80
.044	.048	.034	.035	.052	.037	.045	.014	.002	.012	.043	.014	.018	1.85
.044	.099	.055	.054	.050	.010	.029	.023	.021	.023	.040	.009	.049	1.90
.494	.407	.407	.494	.494	.494	.435	.505	.468	.479	.486	.470	.465	1.95
0.000	0.000	0.000	0.000	0.000	0.000	0.000	0.000	0.000	0.000	0.000	0.000	0.000	2.00
0.000	0.000	0.000	0.000	0.000	0.000	0.000	0.000	0.000	0.000	0.000	0.000	0.000	2.05
0.000	0.000	0.000	0.000	0.000	0.000	0.000	0.000	0.000	0.000	0.000	0.000	0.000	2.10
0.000	0.000	0.000	0.000	0.000	0.000	0.000	0.000	0.000	0.000	0.000	0.000	0.000	2.15
0.000	0.000	0.000	0.000	0.000	0.000	0.000	0.000	0.000	0.000	0.000	0.000	0.000	2.20
0.000	0.000	0.000	0.000	0.000	0.000	0.000	0.000	0.000	0.000	0.000	0.000	0.000	2.25
0.000	0.000	0.000	0.000	0.000	0.000	0.000	0.000	0.000	0.000	0.000	0.000	0.000	2.30
0.000	0.000	0.000	0.000	0.000	0.000	0.000	0.000	0.000	0.000	0.000	0.000	0.000	2.35
0.000	0.000	0.000	0.000	0.000	0.000	0.000	0.000	0.000	0.000	0.000	0.000	0.000	2.40
0.000	0.000	0.000	0.000	0.000	0.000	0.000	0.000	0.000	0.000	0.000	0.000	0.000	2.45

Set 10. Table D — Standard Deviation of Mean Local Pressurant Fractions, Scaling Runs 58-60

Locations I

1	2	3	4	5	6	7	8	9	10	11	12	13	τ
0.000	0.000	0.000	0.000	0.000	0.000	0.000	0.000	0.000	0.000	0.000	0.000	0.000	0.00
.025	.418	.131	.203	.037	.049	.041	.077	.003	.060	.023	.017	.021	.05
.051	.836	.263	.407	.074	.098	.083	.154	.007	.137	.046	.035	.042	.10
.068	.867	.342	.475	.097	.135	.111	.268	.043	.239	.004	.046	.061	.15
.087	.713	.538	.510	.161	.262	.135	.402	.112	.365	.078	.060	.079	.20
.349	.360	.245	.333	.387	.224	.069	.488	.420	.294	.209	.059	.016	.25
.281	.242	.225	.179	.304	.238	.066	.380	.308	.195	.150	.034	.023	.30
.210	.206	.177	.005	.236	.170	.067	.207	.202	.063	.062	.093	.039	.35
.137	.183	.209	.061	.177	.128	.069	.125	.126	.066	.051	.105	.045	.40
.064	.159	.214	.089	.124	.095	.071	.083	.061	.088	.064	.097	.043	.45
.009	.134	.218	.119	.074	.064	.072	.062	.018	.113	.082	.091	.041	.50
.076	.110	.217	.141	.046	.041	.076	.070	.063	.130	.097	.086	.039	.55
.065	.087	.160	.092	.036	.023	.070	.039	.045	.087	.071	.069	.034	.60
.041	.079	.121	.060	.031	.022	.051	.032	.034	.059	.052	.057	.033	.65
.018	.074	.102	.037	.030	.030	.031	.031	.026	.041	.038	.058	.036	.70
.025	.068	.085	.017	.026	.039	.015	.025	.018	.033	.031	.063	.039	.75
.015	.068	.057	.011	.029	.041	.013	.011	.004	.020	.019	.050	.043	.80
.012	.069	.058	.029	.032	.035	.011	.012	.008	.015	.015	.043	.078	.85
.020	.062	.047	.024	.036	.026	.006	.020	.013	.007	.007	.035	.107	.90
.004	.051	.021	.031	.034	.004	.008	.012	.011	.010	.004	.021	.047	.95
.016	.029	.029	.025	.010	.009	.012	.007	.011	.010	.012	.005	.011	1.00
.009	.033	.021	.029	.016	.008	.014	.008	.011	.006	.010	.007	.014	1.05
.004	.039	.018	.036	.029	.017	.016	.009	.011	.004	.008	.008	.016	1.10
.010	.046	.024	.046	.044	.028	.019	.010	.014	.003	.007	.011	.020	1.15
.007	.046	.028	.051	.038	.022	.018	.014	.016	.007	.009	.008	.016	1.20
.014	.046	.031	.053	.026	.014	.017	.018	.018	.011	.011	.003	.010	1 25
.026	.049	.036	.058	.015	.013	.015	.024	.022	.015	.014	.003	.007	1.30
.034	.052	.029	.045	.015	.008	.015	.027	.023	.016	.014	.007	.003	1.35
.038	.056	.026	.034	.019	.005	.015	.026	.021	.012	.015	.006	.005	1.40
.043	.059	.024	.022	.022	.002	.015	.026	.017	.007	.015	.006	.009	1.45
.034	.051	.020	.025	.025	.003	.016	.020	.016	.004	.015	.004	.012	1.50
.021	.042	.018	.028	.028	.006	.014	.015	.017	.007	.013	.002	.008	1.55
.010	.037	.015	.032	.032	.009	.012	.010	.019	.011	.015	.006	.004	1.60
.008	.036	.017	.031	.031	.008	.011	.010	.018	.014	.018	.009	.003	1.65
.008	.038	.017	.031	.031	.008	.008	.012	.017	.014	.013	.008	.007	1.70
.008	.038	.015	.032	.032	.008	.006	.015	.016	.011	.011	.008	.011	1.75
.008	.040	.014	.033	.033	.008	.006	.017	.017	.009	.013	.012	.013	1.80
.010	.043	.013	.034	.034	.008	.006	.020	.017	.007	.016	.012	.011	1.85
.023	.050	.013	.037	.037	.006	.012	.024	.018	.008	.020	.011	.006	1.90
.037	.056	.015	.040	.040	.006	.016	.023	.021	.008	.019	.008	.008	1.95
.048	.061	.019	.043	.043	.007	.021	.021	.023	.007	.019	.004	.010	2.00
.044	.061	.014	.047	.047	.012	.019	.019	.026	.005	.018	.002	.013	2.05
.038	.059	.008	.050	.053	.017	.015	.018	.026	.011	.017	.006	.019	2.10
.037	.057	.008	.052	.058	.020	.014	.019	.027	.020	.017	.010	.026	2.15
.036	.055	.012	.053	.061	.014	.015	.019	.028	.027	.016	.012	.032	2.20
.036	.056	.004	.056	.046	.021	.012	.020	.026	.026	.020	.012	.029	2.25
.037	.056	.005	.060	.029	.033	.009	.022	.024	.023	.025	.015	.027	2.30
.038	.058	.011	.065	.014	.038	.002	.024	.023	.018	.030	.015	.024	2.35
.040	.050	.019	.067	.014	.024	.002	.027	.025	.008	.025	.015	.020	2.40
.043	.046	.025	.071	.017	.009	.004	.031	.027	.010	.019	.016	.014	2.45

Set 11, Table D — Standard Deviation of Mean Local Pressurant Fractions, Scaling Runs 61-63

Locations 1													
1	2	3	4	5	6	7	8	9	10	11	12	13	τ
0.000	0.000	0.000	0.000	0.000	0.000	0.000	0.000	0.000	0.000	0.000	0.000	0.000	0.00
5.535	5.453	5.714	5.721	5.500	3.037	1.082	14.322	11.193	3.765	5.175	2.075	2.478	.05
4.220	4.082	4.333	4.337	4.155	3.599	.879	10.853	8.452	2.839	3.877	1.550	1.931	.10
2.906	2.752	3.000	2.988	2.820	2.507	.686	7.400	5.737	2.053	2.634	1.107	1.432	.15
1.600	1.577	1.820	1.750	1.526	2.319	.513	4.035	3.101	1.625	1.577	.878	.931	.20
.382	1.128	1.247	1.055	.604	3.083	.385	1.472	1.246	1.741	1.238	.974	.492	.25
.152	.898	.821	.692	.445	2.793	.295	1.099	.598	1.319	.586	.773	.316	.30
.065	.633	.584	.464	.271	2.335	.205	.811	.745	.994	.762	.593	.243	.35
.028	.379	.330	.238	.098	1.886	.115	.525	.493	.669	.535	.413	.171	.40
.114	.125	.118	.012	.078	1.432	.025	.241	.242	.345	.316	.233	.102	.45
.169	.061	.045	.140	.195	1.083	.042	.036	.069	.121	.153	.101	.056	.50
.137	.076	.045	.112	.161	1.006	.026	.051	.070	.115	.132	.091	.049	.55
.106	.090	.063	.085	.122	.933	.015	.048	.067	.104	.104	.085	.053	.60
.077	.105	.082	.059	.083	.858	.033	.046	.066	.093	.078	.078	.058	.65
.064	.073	.064	.067	.087	.840	.037	.049	.069	.092	.084	.083	.063	.70
.050	.047	.047	.083	.096	.821	.040	.051	.071	.084	.089	.081	.064	.75
.046	.034	.033	.076	.087	.803	.048	.060	.076	.087	.089	.080	.071	.80
.052	.035	.027	.046	.063	.786	.054	.071	.080	.100	.086	.081	.082	.85
.050	.036	.029	.036	.058	.776	.057	.069	.079	.099	.084	.080	.088	.90
.045	.038	.038	.038	.070	.773	.061	.057	.074	.084	.083	.076	.096	.95
.068	.068	.060	.060	.039	.781	.065	.058	.059	.071	.081	.068	.074	1.00
.083	.055	.049	.062	.049	.778	.057	.054	.065	.075	.077	.072	.073	1.05
.093	.054	.053	.074	.049	.791	.053	.054	.075	.081	.069	.071	.065	1.10
.086	.066	.059	.060	.046	.802	.059	.068	.075	.082	.066	.064	.066	1.15
.077	.067	.064	.056	.055	.814	.069	.078	.073	.082	.069	.061	.071	1.20
.071	.070	.070	.069	.070	.826	.075	.077	.069	.074	.073	.061	.070	1.25
.086	.069	.069	.064	.069	.830	.074	.074	.070	.068	.074	.057	.069	1.30
.083	.077	.070	.064	.070	.831	.069	.066	.070	.075	.066	.054	.065	1.35
.077	.099	.074	.074	.074	.835	.062	.057	.072	.083	.053	.056	.061	1.40
.071	.088	.068	.057	.057	.838	.072	.067	.082	.083	.065	.067	.072	1.45
.066	.069	.069	.038	.038	.836	.080	.079	.090	.087	.083	.081	.084	1.50
.065	.065	.065	.035	.035	.845	.074	.082	.087	.100	.092	.087	.090	1.55
.071	.066	.066	.033	.033	.859	.068	.073	.086	.111	.098	.089	.090	1.60
.064	.070	.070	.034	.014	.865	.073	.070	.093	.108	.102	.091	.094	1.65
.035	.073	.073	.048	.012	.866	.084	.076	.101	.100	.100	.091	.098	1.70
.027	.061	.058	.062	.017	.866	.083	.082	.095	.100	.103	.090	.096	1.75
.048	.060	.038	.063	.028	.866	.077	.089	.094	.104	.112	.090	.088	1.80
.064	.064	.026	.048	.026	.852	.075	.089	.087	.106	.113	.091	.093	1.85
.065	.066	.025	.032	.025	.852	.078	.084	.091	.105	.104	.092	.107	1.90
.076	.066	.041	.024	.024	.862	.082	.079	.091	.103	.097	.092	.109	1.95
.079	.067	.066	.022	.025	.872	.083	.075	.089	.091	.097	.093	.106	2.00
.063	.063	.061	.025	.046	.877	.084	.076	.091	.090	.103	.098	.105	2.05
.036	.036	.052	.040	.052	.871	.087	.079	.103	.105	.105	.109	.109	2.10
.021	.021	.036	.072	.036	.868	.082	.078	.107	.113	.103	.107	.111	2.15
.039	.039	.026	.097	.026	.871	.071	.074	.100	.113	.097	.095	.112	2.20
.064	.058	.018	.072	.018	.863	.075	.080	.100	.114	.102	.091	.115	2.25
.065	.049	.031	.038	.019	.857	.081	.088	.101	.112	.111	.095	.120	2.30
.057	.045	.049	.022	.022	.852	.082	.086	.106	.115	.113	.105	.123	2.35
.045	.019	.069	.024	.024	.857	.083	.085	.110	.116	.111	.116	.125	2.40
.043	.011	.069	.024	.047	.866	.080	.083	.109	.115	.115	.117	.127	2.45

Set 12, Table D — Standard Deviation of Mean Local Pressurant Fractions, Scaling Runs 64-66

Locations I

1	2	3	4	5	6	7	8	9	10	11	12	13	τ
0.000	0.000	0.000	0.000	0.000	0.000	0.000	0.000	0.000	0.000	0.000	0.000	0.000	0.00
.486	.179	1.447	.179	.185	1.118	.545	.911	.108	.521	.120	.122	.411	.05
.961	.370	2.904	.370	.379	2.224	1.054	1.810	.251	1.030	.250	.255	.786	.10
.820	.302	2.510	.289	.359	1.945	.927	1.574	.237	.874	.223	.231	.679	.15
.547	.182	1.724	.166	.232	1.356	.654	1.079	.181	.577	.163	.173	.466	.20
.286	.069	.973	.111	.107	.760	.380	.599	.130	.305	.103	.117	.259	.25
.088	.032	.372	.064	.033	.257	.098	.204	.079	.110	.037	.037	.079	.30
.065	.032	.128	.032	.054	.108	.018	.068	.049	.034	.031	.002	.041	.35
.042	.033	.095	.050	.048	.066	.029	.063	.038	.036	.031	.009	.026	.40
.028	.051	.040	.028	.033	.038	.028	.049	.028	.030	.020	.009	.021	.45
.011	.035	.046	.035	.033	.011	.012	.040	.019	.035	.011	.016	.015	.50
.011	.019	.035	.034	.022	.011	.009	.026	.009	.021	.010	.007	.008	.55
.037	.012	.017	.011	.017	.037	.024	.020	.013	.004	.008	.005	.002	.60
.043	.025	.005	.025	.013	.043	.024	.020	.010	.013	.007	.013	.009	.65
.030	.020	.030	.020	.010	.030	.021	.027	.012	.011	.010	.017	.013	.70
.028	.004	.006	.004	.004	.028	.023	.018	.019	.011	.017	.009	.010	.75
.028	.004	.004	.004	.004	.028	.027	.028	.017	.015	.008	.005	.009	.80
.025	.009	.009	.009	.009	.025	.022	.027	.018	.021	.013	.005	.009	.85
.023	.013	.013	.013	.013	.023	.023	.029	.028	.015	.011	.008	.015	.90
.023	.021	.009	.009	.009	.032	.006	.028	.018	.010	.015	.009	.012	.95
.069	.032	.031	.031	.031	.032	.037	.023	.006	.019	.007	.019	.014	1.00
.031	.013	.013	.020	.020	.021	.004	.021	.010	.009	.003	.004	.012	1.05
.035	.018	.018	.015	.017	.023	.024	.026	.029	.027	.010	.005	.014	1.10
.037	.016	.016	.016	.048	.041	.016	.038	.033	.011	.020	.010	.008	1.15
.033	.032	.032	.032	.032	.033	.019	.018	.001	.015	.010	.027	.033	1.20
.067	.038	.014	.040	.040	.036	.041	.008	.017	.009	.012	.018	.025	1.25
.042	.024	.027	.032	.018	.028	.046	.036	.036	.032	.015	.005	.009	1.30
.048	.037	.003	.038	.003	.042	.034	.028	.030	.023	.012	.008	.006	1.35
.041	.031	.031	.031	.031	.041	.021	.021	.005	.011	.020	.030	.029	1.40
.067	.035	.035	.035	.035	.040	.029	.013	.011	.016	.035	.028	.012	1.45
.095	.035	.055	.048	.055	.048	.038	.026	.026	.028	.034	.034	.032	1.50
.041	.035	.012	.044	.012	.079	.037	.017	.030	.029	.025	.035	.016	1.55
.051	.050	.050	.040	.050	.083	.023	.025	.011	.017	.024	.047	.022	1.60
.050	.047	.047	.047	.047	.064	.022	.028	.010	.034	.027	.049	.017	1.65
.057	.039	.039	.043	.043	.047	.028	.019	.020	.022	.036	.041	.027	1.70
.508	.464	.464	.423	.454	.447	.470	.501	.472	.478	.472	.486	.484	1.75
.537	.489	.489	.439	.489	.487	.441	.498	.451	.452	.441	.461	.461	1.80
0.000	0.000	0.000	0.000	0.000	0.000	0.000	0.000	0.000	0.000	0.000	0.000	0.000	1.85
0.000	0.000	0.000	0.000	0.000	0.000	0.000	0.000	0.000	0.000	0.000	0.000	0.000	1.90
0.000	0.000	0.000	0.000	0.000	0.000	0.000	0.000	0.000	0.000	0.000	0.000	0.000	1.95
0.000	0.000	0.000	0.000	0.000	0.000	0.000	0.000	0.000	0.000	0.000	0.000	0.000	2.00
0.000	0.000	0.000	0.000	0.000	0.000	0.000	0.000	0.000	0.000	0.000	0.000	0.000	2.05
0.000	0.000	0.000	0.000	0.000	0.000	0.000	0.000	0.000	0.000	0.000	0.000	0.000	2.10
0.000	0.000	0.000	0.000	0.000	0.000	0.000	0.000	0.000	0.000	0.000	0.000	0.000	2.15
0.000	0.000	0.000	0.000	0.000	0.000	0.000	0.000	0.000	0.000	0.000	0.000	0.000	2.20
0.000	0.000	0.000	0.000	0.000	0.000	0.000	0.000	0.000	0.000	0.000	0.000	0.000	2.25
0.000	0.000	0.000	0.000	0.000	0.000	0.000	0.000	0.000	0.000	0.000	0.000	0.000	2.30
0.000	0.000	0.000	0.000	0.000	0.000	0.000	0.000	0.000	0.000	0.000	0.000	0.000	2.35
0.000	0.000	0.000	0.000	0.000	0.000	0.000	0.000	0.000	0.000	0.000	0.000	0.000	2.40
0.000	0.000	0.000	0.000	0.000	0.000	0.000	0.000	0.000	0.000	0.000	0.000	0.000	2.45

Set 1, Table E — Deviations of Mean Local Pressurant Fractions, Scaling Runs 23-31

Locations i

1	2	3	4	5	6	7	8	9	10	11	12	13	r
0.000	0.000	0.000	0.000	0.000	0.000	0.000	0.000	0.000	0.000	0.000	0.000	0.000	0.00
-1.838	2.398	2.452	.370	-.415	.796	-.722	-.128	.190	-.450	-.524	-.319	-.010	.05
-2.927	2.212	6.111	1.601	.054	.879	-.803	-1.944	-.407	-1.722	-1.637	-.512	-.099	.10
-3.794	2.011	9.257	2.712	.485	.941	-.890	-3.466	-1.101	-2.788	-2.536	-.666	-.966	.15
-3.285	2.131	8.305	2.113	.460	.593	-.732	-3.184	-1.034	-2.522	-2.207	-.519	-.767	.20
-2.442	1.369	6.758	.988	.117	.251	-.574	-2.043	-.611	-1.634	-1.362	-.304	-.512	.25
-1.445	.546	3.965	-.107	-.220	-.038	-.386	-.746	-.147	-.629	-.452	-.083	-.245	.30
-1.000	.350	2.555	-.282	-.281	-.100	-.260	-.349	-.026	-.295	-.191	-.016	-.109	.35
-.761	.307	1.893	-.270	-.238	-.104	-.187	-.235	-.001	-.191	-.145	.005	-.069	.40
-.660	.304	1.536	-.375	-.222	-.118	-.150	-.160	.009	-.130	-.105	.006	-.053	.45
-.529	.313	1.316	-.284	-.245	-.130	-.139	-.117	.004	-.093	-.063	-.003	-.035	.50
-.487	.321	1.204	-.270	-.249	-.140	-.128	-.104	-.008	-.069	-.048	-.001	-.019	.55
-.445	.323	1.152	-.277	-.263	-.154	-.127	-.099	-.002	-.060	-.041	.012	-.018	.60
-.379	.320	1.152	-.292	-.287	-.158	-.138	-.084	-.001	-.075	-.029	.008	-.031	.65
-.321	.336	1.167	-.299	-.286	-.179	-.148	-.076	-.028	-.077	-.023	-.005	-.040	.70
-.294	.356	1.116	-.269	-.269	-.208	-.153	-.088	-.046	-.061	-.036	-.016	-.027	.75
-.249	.353	1.088	-.246	-.246	-.226	-.161	-.077	-.059	-.061	-.040	-.026	-.044	.80
-.230	.375	1.060	-.228	-.246	-.232	-.156	-.104	-.055	-.056	-.058	-.034	-.019	.85
-.224	.413	1.061	-.208	-.258	-.222	-.177	-.094	-.078	-.080	-.050	-.039	-.047	.90
-.238	.402	1.075	-.165	-.256	-.244	-.163	-.095	-.065	-.103	-.053	-.037	-.048	.95
-.236	.342	1.056	-.151	-.235	-.235	-.168	-.083	-.077	-.060	-.043	-.056	-.054	1.00
-.108	.197	.576	-.098	-.132	-.136	-.117	-.064	-.034	-.007	-.045	-.020	-.010	1.05
-.071	.154	.411	-.083	-.092	-.112	-.096	-.041	-.026	.004	-.021	-.008	-.019	1.10
-.079	.160	.347	-.053	-.071	-.114	-.101	-.062	-.016	.046	-.049	.001	-.008	1.15
-.064	.129	.325	-.068	-.058	-.097	-.104	-.037	-.007	.048	-.029	-.006	-.022	1.20
-.056	.090	.293	-.063	-.042	-.099	-.084	-.036	.016	.078	-.037	.011	-.020	1.25
-.043	.069	.213	-.056	-.041	-.095	-.086	-.035	.027	.100	-.033	.013	-.022	1.30
-.047	.067	.188	-.051	-.020	-.085	-.086	-.056	.036	.114	-.055	.022	-.025	1.35
-.041	.069	.142	-.018	.000	-.082	-.083	-.065	.044	.108	-.068	.023	-.025	1.40
-.005	.039	.107	-.025	-.011	-.064	-.084	-.064	.063	.116	-.063	.021	-.020	1.45
-.028	.001	.137	-.028	.003	-.063	-.085	-.050	.059	.120	-.059	.025	-.028	1.50
-.006	-.006	.112	-.041	-.021	-.062	-.090	-.035	.063	.138	-.046	.021	-.026	1.55
-.037	-.024	.096	-.059	.038	-.069	-.081	-.038	.062	.151	-.058	.033	-.008	1.60
-.061	-.031	.071	-.028	.056	-.079	-.064	-.051	.073	.161	-.060	.041	-.017	1.65
-.012	-.002	.010	-.014	-.014	-.040	-.062	-.025	.055	.107	-.041	.034	-.010	1.70
-.005	-.015	-.005	-.005	-.005	-.028	-.048	-.016	.047	.081	-.026	.025	-.002	1.75
-.007	-.007	.015	-.007	.015	-.007	-.012	.042	.014	.012	-.005	.002	-.012	1.80
.013	-.013	.014	-.013	.014	-.013	-.016	.006	.012	.019	-.005	-.005	-.013	1.85
0.000	0.000	0.000	0.000	0.000	0.000	0.000	0.000	0.000	0.000	0.000	0.000	0.000	1.90
0.000	0.000	0.000	0.000	0.000	0.000	0.000	0.000	0.000	0.000	0.000	0.000	0.000	1.95
0.000	0.000	0.000	0.000	0.000	0.000	0.000	0.000	0.000	0.000	0.000	0.000	0.000	2.00
0.000	0.000	0.000	0.000	0.000	0.000	0.000	0.000	0.000	0.000	0.000	0.000	0.000	2.05
0.000	0.000	0.000	0.000	0.000	0.000	0.000	0.000	0.000	0.000	0.000	0.000	0.000	2.10
0.000	0.000	0.000	0.000	0.000	0.000	0.000	0.000	0.000	0.000	0.000	0.000	0.000	2.15
0.000	0.000	0.000	0.000	0.000	0.000	0.000	0.000	0.000	0.000	0.000	0.000	0.000	2.20
0.000	0.000	0.000	0.000	0.000	0.000	0.000	0.000	0.000	0.000	0.000	0.000	0.000	2.25
0.000	0.000	0.000	0.000	0.000	0.000	0.000	0.000	0.000	0.000	0.000	0.000	0.000	2.30
0.000	0.000	0.000	0.000	0.000	0.000	0.000	0.000	0.000	0.000	0.000	0.000	0.000	2.35
0.000	0.000	0.000	0.000	0.000	0.000	0.000	0.000	0.000	0.000	0.000	0.000	0.000	2.40
0.000	0.000	0.000	0.000	0.000	0.000	0.000	0.000	0.000	0.000	0.000	0.000	0.000	2.45

9 CASES

Set 2, Table E — Deviations of Mean Local Pressurant Fractions, Scaling Runs 32-34

Locations i

1	2	3	4	5	6	7	8	9	10	11	12	13	τ
0.000	0.000	0.000	0.000	0.000	0.000	0.000	0.000	0.000	0.000	0.000	0.000	0.000	0.00
-.323	-.330	.766	-.690	-.472	-.147	-.100	1.016	.112	-.016	.121	.014	.045	.05
-.636	-.726	1.318	-1.445	-.973	-.322	-.175	2.114	.348	.090	.300	.016	.100	.10
-.502	-.207	2.536	-.909	-.595	-.013	-.357	.953	-.139	-.537	-.160	-.134	.068	.15
-.322	.255	3.289	-.375	-.189	.257	-.531	-.099	-.531	-.980	-.505	-.277	.009	.20
-.239	.490	3.424	-.061	.034	.350	-.616	-.645	-.662	-1.087	-.610	-.325	-.051	.25
-.253	.618	3.273	.162	.129	.323	-.612	-.975	-.649	-1.032	-.601	-.284	-.104	.30
-.268	.749	3.122	.304	.224	.295	-.606	-1.304	-.635	-.976	-.592	-.242	-.156	.35
-.348	.604	2.570	.250	.097	.147	-.518	-.986	-.406	-.687	-.399	-.158	-.162	.40
-.421	.418	1.532	.041	-.076	-.000	-.401	-.562	-.168	-.403	-.199	-.066	-.140	.45
-.386	.342	1.623	-.047	-.121	-.030	-.319	-.405	-.095	-.277	-.128	-.043	-.110	.50
-.334	.276	1.286	-.120	-.145	-.042	-.246	-.275	-.044	-.169	-.072	-.035	-.081	.55
-.301	.243	1.098	-.158	-.175	-.062	-.213	-.203	-.016	-.089	-.034	-.022	-.062	.60
-.276	.232	1.002	-.158	-.184	-.087	-.182	-.168	-.006	-.059	-.032	-.013	-.054	.65
-.255	.234	.939	-.151	-.177	-.104	-.155	-.152	-.010	-.060	-.039	-.012	-.049	.70
-.238	.246	.905	-.142	-.156	-.108	-.140	-.147	-.024	-.075	-.047	-.022	-.053	.75
-.205	.266	.895	-.137	-.138	-.105	-.150	-.144	-.044	-.087	-.043	-.043	-.069	.80
-.164	.279	.876	-.137	-.132	-.106	-.152	-.139	-.056	-.088	-.036	-.056	-.084	.85
-.132	.275	.823	-.129	-.116	-.099	-.142	-.133	-.062	-.079	-.058	-.056	-.090	.90
-.113	.308	.843	-.106	-.110	-.085	-.285	-.114	-.060	-.072	-.058	-.062	-.086	.95
-.093	.247	.786	-.107	-.107	-.093	-.144	-.099	-.073	-.078	-.073	-.081	-.090	1.00
-.064	.199	.588	-.096	-.079	-.073	-.117	-.081	-.061	-.051	-.047	-.054	-.066	1.05
-.047	.160	.436	-.089	-.051	-.058	-.095	-.066	-.049	-.027	-.028	-.034	-.050	1.10
-.055	.140	.386	-.088	-.029	-.056	-.080	-.062	-.038	-.016	-.025	-.031	-.051	1.15
-.049	.136	.351	-.081	-.022	-.049	-.068	-.060	-.038	-.010	-.029	-.033	-.053	1.20
-.041	.132	.328	-.073	-.003	-.045	-.065	-.062	-.043	-.006	-.036	-.037	-.056	1.25
-.035	.116	.321	-.053	.011	-.045	-.072	-.060	-.037	-.005	-.043	-.040	-.062	1.30
-.038	.099	.339	-.038	.000	-.024	-.082	-.058	-.034	-.003	-.049	-.044	-.069	1.35
-.034	.092	.335	-.050	-.016	-.023	-.080	-.059	-.031	.014	-.040	-.041	-.072	1.40
-.027	.112	.307	-.051	-.017	-.044	-.075	-.057	-.027	.023	-.033	-.036	-.079	1.45
-.025	.105	.280	-.053	-.019	-.038	-.069	-.055	-.019	.038	-.038	-.031	-.079	1.50
-.023	.084	.236	-.045	-.008	-.023	-.071	-.058	-.013	.050	-.044	-.029	-.079	1.55
-.040	.066	.221	-.033	.014	-.040	-.082	-.051	.002	.067	-.033	-.021	-.073	1.60
-.040	.062	.186	-.035	.016	-.040	-.079	-.049	.014	.084	-.033	-.019	-.069	1.65
-.027	.055	.164	-.029	.014	-.027	-.070	-.056	.017	.096	-.047	-.023	-.071	1.70
-.021	.045	.167	-.037	.022	-.036	-.073	-.053	.025	.096	-.046	-.022	-.073	1.75
-.018	.049	.168	-.047	.020	-.047	-.077	-.049	.035	.095	-.042	-.017	-.073	1.80
-.038	.048	.171	-.047	.005	-.034	-.074	-.053	.036	.105	-.049	-.009	-.068	1.85
-.044	.042	.165	-.057	-.003	-.032	-.068	-.050	.035	.117	-.048	-.001	-.062	1.90
-.040	.036	.149	-.059	-.010	-.039	-.066	-.040	.042	.125	-.042	.005	-.062	1.95
-.049	.023	.127	-.032	.007	-.060	-.066	-.034	.049	.129	-.045	.010	-.066	2.00
-.045	.027	.121	-.021	.018	-.060	-.069	-.038	.050	.124	-.050	.010	-.069	2.05
-.041	.032	.115	-.024	.015	-.044	-.070	-.051	.059	.121	-.055	.010	-.071	2.10
-.042	.036	.103	-.011	.029	-.060	-.070	-.055	.060	.132	-.061	.008	-.074	2.15
-.035	.036	.094	-.004	.036	-.077	-.068	-.052	.052	.145	-.064	.006	-.075	2.20
-.019	.017	.096	-.023	.017	-.072	-.060	-.042	.060	.148	-.057	.006	-.073	2.25
-.003	-.001	.097	-.041	-.001	-.056	-.053	-.043	.074	.147	-.056	.001	-.072	2.30
-.019	.002	.091	-.038	.002	-.061	-.047	-.042	.083	.155	-.055	-.002	-.072	2.35
-.038	.017	.081	-.040	.017	-.054	-.044	-.040	.081	.161	-.060	-.005	-.076	2.40
-.043	.032	.065	-.056	.023	-.043	-.039	-.042	.083	.162	-.065	-.008	-.073	2.45

3 CASES

MEAN VALUES OF ALL QUANTITIES

Set 3, Table E — Deviations of Mean Local Pressurant Fractions, Scaling Runs 35-37

Locations I

1	2	3	4	5	6	7	8	9	10	11	12	13	τ
0.000	0.000	0.000	0.000	0.000	0.000	0.000	0.000	0.000	0.000	0.000	0.000	0.000	0.00
-.764	-.934	-1.189	-1.449	-1.242	-.726	-1.066	2.799	.995	1.091	1.193	1.647	-.364	.05
-.169	-.536	-.354	-.979	-.514	-.071	-1.132	1.834	.336	.359	.676	1.205	-.654	.10
.424	-.140	.460	-.510	.213	.583	-1.199	.866	-.323	-.375	.158	.760	-.946	.15
1.019	.257	1.316	-.040	.942	1.239	-1.265	-.101	-.982	-1.107	-.359	.317	-1.237	.20
1.612	.654	2.151	.430	1.669	1.893	-1.332	-1.068	-1.643	-1.840	-.876	-.128	-1.528	.25
2.108	.866	2.669	.698	2.255	2.407	-1.373	-1.795	-2.007	-2.349	-1.257	-.430	-1.787	.30
2.604	1.076	3.185	.965	2.841	2.920	-1.418	-2.524	-2.373	-2.858	-1.639	-.731	-2.046	.35
2.854	1.211	3.505	1.151	3.181	3.187	-1.376	-3.030	-2.580	-3.148	-1.861	-.956	-2.142	.40
2.387	.930	2.948	.038	2.684	2.694	-1.157	-2.552	-2.113	-2.612	-1.480	-.750	-1.814	.45
1.909	.626	2.351	.408	2.164	2.183	-.943	-2.030	-1.617	-2.045	-1.077	-.519	-1.484	.50
1.429	.322	1.755	.142	1.643	1.672	-.729	-1.507	-1.123	-1.480	-.675	-.290	-1.154	.55
1.001	.069	1.218	-.130	1.169	1.211	-.537	-1.023	-.715	-.964	-.335	-.117	-.842	.60
.724	-.076	.864	-.298	.854	.900	-.424	-.695	-.459	-.642	-.107	-.007	-.632	.65
.667	-.074	.778	-.321	.771	.809	-.428	-.595	-.414	-.602	-.040	.023	-.575	.70
.612	-.071	.693	-.344	.690	.719	-.430	-.495	-.370	-.563	.027	.050	-.517	.75
.555	-.044	.633	-.371	.610	.632	-.424	-.440	-.353	-.543	.089	.097	-.441	.80
.527	-.015	.604	-.406	.560	.598	-.437	-.427	-.334	-.480	.088	.130	-.402	.85
.500	.003	.584	-.441	.517	.569	-.453	-.411	-.314	-.418	.088	.150	-.371	.90
.496	-.007	.580	-.453	.505	.553	-.432	-.390	-.316	-.390	.077	.144	-.357	.95
.520	-.031	.365	-.414	.533	.533	-.363	-.384	-.256	-.315	-.016	.033	-.288	1.00
.561	-.092	.230	-.386	.570	.570	-.327	-.279	-.246	-.282	-.052	-.013	-.257	1.05
.579	-.122	.181	-.381	.584	.584	-.314	-.277	-.241	-.267	-.054	-.020	-.254	1.10
.596	-.152	.132	-.375	.598	.598	-.300	-.275	-.238	-.251	-.056	-.027	-.250	1.15
.610	-.158	.109	-.366	.610	.610	-.301	-.273	-.238	-.248	-.065	-.039	-.253	1.20
.621	-.158	.096	-.358	.621	.621	-.302	-.272	-.240	-.245	-.074	-.052	-.257	1.25
.631	-.157	.084	-.352	.631	.631	-.301	-.271	-.240	-.242	-.084	-.064	-.261	1.30
.637	-.153	.076	-.351	.639	.637	-.295	-.273	-.236	-.243	-.095	-.073	-.262	1.35
.635	-.148	.071	-.349	.647	.635	-.295	-.274	-.232	-.244	-.103	-.080	-.261	1.40
.639	-.143	.066	-.348	.659	.634	-.296	-.277	-.229	-.243	-.111	-.087	-.263	1.45
.647	-.148	.059	-.353	.676	.631	-.300	-.271	-.228	-.230	-.116	-.096	-.269	1.50
.656	-.158	.048	-.367	.688	.637	-.300	-.267	-.224	-.213	-.122	-.104	-.274	1.55
.659	-.173	.044	-.376	.690	.650	-.297	-.261	-.218	-.201	-.128	-.111	-.279	1.60
.653	-.188	.042	-.366	.684	.663	-.294	-.265	-.211	-.197	-.131	-.110	-.279	1.65
.649	-.204	.039	-.353	.679	.673	-.291	-.269	-.204	-.191	-.136	-.110	-.281	1.70
.655	-.217	.029	-.347	.680	.670	-.287	-.270	-.197	-.183	-.141	-.112	-.278	1.75
.662	-.228	.015	-.345	.684	.662	-.280	-.265	-.196	-.171	-.148	-.114	-.276	1.80
.670	-.238	-.001	-.343	.687	.655	-.273	-.258	-.196	-.159	-.156	-.116	-.272	1.85
.667	-.250	-.017	-.323	.689	.656	-.273	-.257	-.199	-.151	-.158	-.117	-.269	1.90
.666	-.247	-.032	-.316	.692	.660	-.272	-.260	-.199	-.144	-.159	-.120	-.267	1.95
.663	-.238	-.049	-.314	.694	.663	-.272	-.264	-.197	-.136	-.161	-.124	-.268	2.00
.676	-.230	-.056	-.328	.690	.663	-.273	-.266	-.195	-.129	-.159	-.124	-.270	2.05
.692	-.235	-.062	-.328	.683	.666	-.280	-.271	-.189	-.121	-.163	-.123	-.268	2.10
.704	-.243	-.069	-.321	.676	.666	-.286	-.277	-.182	-.113	-.169	-.123	-.266	2.15
.702	-.240	-.075	-.304	.678	.662	-.294	-.285	-.177	-.106	-.179	-.125	-.265	2.20
.695	-.235	-.078	-.299	.686	.658	-.291	-.286	-.179	-.095	-.184	-.127	-.263	2.25
.692	-.231	-.083	-.302	.691	.651	-.290	-.285	-.182	-.084	-.187	-.128	-.262	2.30
.698	-.236	-.093	-.312	.688	.655	-.286	-.284	-.179	-.075	-.190	-.126	-.257	2.35
.700	-.237	-.099	-.313	.688	.657	-.283	-.287	-.171	-.075	-.193	-.126	-.260	2.40
.702	-.233	-.105	-.306	.686	.657	-.282	-.290	-.162	-.078	-.197	-.128	-.265	2.45

3 CASES

Set 4, Table E — Deviations of Mean Local Pressurant Fractions, Scaling Runs 39-41

Locations I

1	2	3	4	5	6	7	8	9	10	11	12	13	τ
0.000	0.000	0.000	0.000	0.000	0.000	0.000	0.000	0.000	0.000	0.000	0.000	0.000	0.00
-1.188	-.912	-1.240	-1.314	-1.328	-1.148	-.808	.767	.131	.150	4.141	3.087	-.347	.05
-1.252	-.686	-1.326	-1.404	-1.520	-1.159	-.551	.851	.314	.449	3.603	2.862	-.115	.10
-1.137	-.392	-.999	-1.208	-1.367	-.974	-.309	.711	.367	.505	2.649	2.211	.017	.15
-.824	-.008	.101	-.514	-.748	-.427	-.135	.143	.214	.067	1.280	.957	-.097	.20
-.625	.221	1.034	.075	-.279	-.009	-.091	-.316	.059	-.378	.465	.107	-.261	.25
-.527	.316	1.769	.473	.045	.273	-.148	-.649	-.084	-.792	.131	-.365	-.443	.30
-.476	.298	1.072	.522	.116	.352	-.163	-.690	-.107	-.869	.062	-.456	-.455	.35
-.394	.180	1.276	.285	.014	.192	-.115	-.425	-.030	-.564	.102	-.238	-.280	.40
-.308	.072	.732	.105	-.054	.042	-.073	-.205	.027	-.295	.123	-.045	-.123	.45
-.273	.042	.527	.014	-.084	-.017	-.063	-.115	.037	-.181	.139	.045	-.069	.50
-.273	.067	.517	-.030	-.101	-.015	-.075	-.107	.025	-.164	.163	.077	-.074	.55
-.270	.105	.513	-.074	-.125	-.033	-.088	-.107	.010	-.148	.187	.114	-.083	.60
-.253	.135	.495	-.102	-.126	-.077	-.096	-.107	-.004	-.137	.199	.150	-.082	.65
-.238	.145	.465	-.115	-.121	-.096	-.102	-.111	-.026	-.130	.221	.191	-.073	.70
-.217	.119	.470	-.150	-.150	-.081	-.112	-.123	-.053	-.125	.266	.218	-.061	.75
-.175	.111	.470	-.149	-.149	-.110	-.126	-.131	-.074	-.137	.280	.239	-.058	.80
-.169	.148	.468	-.129	-.129	-.127	-.134	-.127	-.091	-.142	.277	.232	-.066	.85
-.183	.145	.490	-.112	-.121	-.117	-.137	-.127	-.112	-.148	.294	.206	-.064	.90
-.153	.153	.474	-.110	-.146	-.131	-.162	-.142	-.118	-.138	.312	.240	-.071	.95
-.123	.096	.467	-.086	-.123	-.143	-.153	-.114	-.109	-.094	.224	.218	-.054	1.00
-.092	.034	.279	-.091	-.053	-.093	-.105	-.069	-.059	-.034	.168	.155	-.040	1.05
-.071	.059	.207	-.053	-.069	-.091	-.082	-.069	-.040	-.022	.148	.123	-.035	1.10
-.087	.046	.180	-.083	-.053	-.083	-.077	-.063	-.010	.018	.130	.111	-.031	1.15
-.103	.019	.149	-.064	-.028	-.069	-.069	-.055	.004	.028	.115	.093	-.020	1.20
-.055	.020	.145	-.048	-.028	-.065	-.072	-.058	-.002	.040	.085	.069	-.034	1.25
-.073	.020	.153	-.026	-.015	-.036	-.075	-.064	.003	.039	.061	.052	-.037	1.30
-.069	.020	.125	-.031	-.019	-.042	-.048	-.064	.020	.054	.047	.041	-.031	1.35
-.056	.037	.091	-.023	-.023	-.056	-.047	-.053	.034	.067	.025	.033	-.028	1.40
-.070	.046	.054	.003	.005	-.058	-.053	-.050	.042	.075	.010	.021	-.023	1.45
-.058	.028	.056	-.023	-.023	-.023	-.037	-.046	.045	.085	.001	.012	-.015	1.50
-.015	-.004	.048	-.015	-.015	-.055	-.026	-.042	.045	.100	-.013	.012	-.017	1.55
-.036	-.018	.079	-.001	-.001	-.087	-.021	-.043	.054	.110	-.022	.003	-.015	1.60
-.009	.048	.067	.007	.007	-.075	-.033	-.052	.039	.100	-.044	-.022	-.031	1.65
.027	.027	.027	.027	.027	-.064	-.034	-.048	.051	.120	-.066	-.043	-.046	1.70
-.012	-.012	.032	.032	.032	-.037	-.032	-.035	.064	.142	-.072	-.053	-.046	1.75
-.042	-.042	.045	.037	.037	-.018	-.014	-.038	.070	.153	-.084	-.061	-.037	1.80
-.074	-.067	.085	.043	.043	-.001	-.014	-.042	.084	.143	-.087	-.058	-.049	1.85
-.032	.016	.044	.044	.044	-.012	-.018	-.050	.064	.136	-.102	-.069	-.058	1.90
-.037	.019	.019	.020	.021	-.027	-.003	-.029	.072	.164	-.099	-.069	-.045	1.95
-.035	-.011	-.011	.020	.047	-.022	.007	-.025	.087	.161	-.099	-.067	-.050	2.00
-.006	-.006	-.006	-.006	-.006	-.006	.018	.003	.050	.067	-.040	-.031	-.028	2.05
-.011	-.011	-.011	-.011	-.011	-.011	.021	.011	.061	.072	-.035	-.034	-.023	2.10
0.000	0.000	0.000	0.000	0.000	0.000	0.000	0.000	0.000	0.000	0.000	0.000	0.000	2.15
0.000	0.000	0.000	0.000	0.000	0.000	0.000	0.000	0.000	0.000	0.000	0.000	0.000	2.20
0.000	0.000	0.000	0.000	0.000	0.000	0.000	0.000	0.000	0.000	0.000	0.000	0.000	2.25
0.000	0.000	0.000	0.000	0.000	0.000	0.000	0.000	0.000	0.000	0.000	0.000	0.000	2.30
0.000	0.000	0.000	0.000	0.000	0.000	0.000	0.000	0.000	0.000	0.000	0.000	0.000	2.35
0.000	0.000	0.000	0.000	0.000	0.000	0.000	0.000	0.000	0.000	0.000	0.000	0.000	2.40
0.000	0.000	0.000	0.000	0.000	0.000	0.000	0.000	0.000	0.000	0.000	0.000	0.000	2.45

3 CASES

Set 5, Table E — Deviations of Mean Local Pressurant Fractions, Scaling Runs 42-44

Locations I

1	2	3	4	5	6	7	8	9	10	11	12	13	r
0.000	0.000	0.000	0.000	0.000	0.000	0.000	0.000	0.000	0.000	0.000	0.000	0.000	0.00
-.503	.766	.662	-2.335	-2.335	-1.893	.260	2.166	.613	1.500	1.096	.297	-.323	.05
-.960	1.570	.993	-4.630	-4.638	-3.739	.549	4.311	1.223	3.070	2.248	.636	-.605	.10
-.794	1.867	.850	-4.242	-4.323	-3.049	.241	4.020	1.197	2.704	1.862	.434	-.769	.15
-.648	1.167	.874	-2.071	-2.249	-1.456	-.109	1.998	.677	1.294	.852	.143	-.460	.20
-.560	.304	.957	.023	-.208	-.071	-.336	-.029	.131	-.043	-.054	-.066	-.049	.25
-.420	.168	.912	-.013	-.124	-.034	-.153	-.260	.015	-.135	-.084	.034	.089	.30
-.268	.095	.684	-.102	-.126	-.067	-.104	-.143	.023	-.066	-.052	.035	.072	.35
-.205	.137	.586	-.137	-.165	-.104	-.081	-.103	.028	-.042	-.024	.016	.061	.40
-.179	.191	.549	-.170	-.177	-.102	-.070	-.080	.040	-.043	-.021	.032	.055	.45
-.165	.173	.551	-.156	-.156	-.081	-.076	-.085	.027	-.062	-.025	.013	.040	.50
-.162	.151	.554	-.113	-.113	-.086	-.071	-.078	.005	-.075	-.032	-.008	.018	.55
-.179	.172	.573	-.087	-.087	-.097	-.088	-.076	-.013	-.076	-.035	-.012	.004	.60
-.138	.221	.559	-.117	-.117	-.085	-.090	-.069	-.034	-.076	-.044	-.017	.002	.65
-.098	.219	.562	-.129	-.129	-.098	-.095	-.058	-.041	-.067	-.035	-.025	-.002	.70
-.077	.227	.554	-.121	-.121	-.114	-.093	-.073	-.041	-.060	-.037	-.030	-.021	.75
-.069	.225	.571	-.112	-.112	-.112	-.093	-.073	-.048	-.067	-.048	-.037	-.035	.80
-.077	.284	.593	-.077	-.121	-.121	-.093	-.085	-.035	-.076	-.064	-.050	-.054	.85
-.071	.283	.586	-.070	-.126	-.126	-.093	-.070	-.073	-.077	-.064	-.050	-.046	.90
-.068	.293	.624	-.066	-.117	-.117	-.093	-.106	-.084	-.057	-.084	-.061	-.053	.95
-.032	.256	.642	-.080	-.080	-.090	-.119	-.095	-.095	-.076	-.090	-.076	-.081	1.00
.005	.150	.263	-.017	-.042	-.064	-.070	-.036	-.064	-.025	-.032	-.023	-.037	1.05
-.016	.133	.184	-.052	-.065	-.065	-.054	-.039	-.037	.009	-.015	.006	-.003	1.10
-.006	.074	.126	.024	-.013	-.093	-.056	-.050	-.030	.027	-.016	.010	-.005	1.15
.011	.070	.066	-.037	-.037	-.040	-.055	-.036	-.005	.041	-.011	.026	-.003	1.20
-.037	.117	.018	-.037	-.032	-.090	-.043	-.033	.008	.077	-.006	.037	.011	1.25
.006	.059	.020	-.022	-.018	-.056	-.059	-.052	.013	.073	-.018	.042	.004	1.30
.006	.006	.064	-.049	-.039	-.049	-.042	-.051	.016	.104	-.023	.038	.012	1.35
-.032	.017	.020	-.088	-.005	-.090	-.056	-.039	.038	.133	-.014	.056	.047	1.40
-.039	.011	-.035	-.026	-.008	-.073	-.050	-.045	.025	.133	-.002	.062	.042	1.45
0.000	0.000	0.000	0.000	0.000	0.000	0.000	0.000	0.000	0.000	0.000	0.000	0.000	1.50
0.000	0.000	0.000	0.000	0.000	0.000	0.000	0.000	0.000	0.000	0.000	0.000	0.000	1.55
0.000	0.000	0.000	0.000	0.000	0.000	0.000	0.000	0.000	0.000	0.000	0.000	0.000	1.60
0.000	0.000	0.000	0.000	0.000	0.000	0.000	0.000	0.000	0.000	0.000	0.000	0.000	1.65
0.000	0.000	0.000	0.000	0.000	0.000	0.000	0.000	0.000	0.000	0.000	0.000	0.000	1.70
0.000	0.000	0.000	0.000	0.000	0.000	0.000	0.000	0.000	0.000	0.000	0.000	0.000	1.75
0.000	0.000	0.000	0.000	0.000	0.000	0.000	0.000	0.000	0.000	0.000	0.000	0.000	1.80
0.000	0.000	0.000	0.000	0.000	0.000	0.000	0.000	0.000	0.000	0.000	0.000	0.000	1.85
0.000	0.000	0.000	0.000	0.000	0.000	0.000	0.000	0.000	0.000	0.000	0.000	0.000	1.90
0.000	0.000	0.000	0.000	0.000	0.000	0.000	0.000	0.000	0.000	0.000	0.000	0.000	1.95
0.000	0.000	0.000	0.000	0.000	0.000	0.000	0.000	0.000	0.000	0.000	0.000	0.000	2.00
0.000	0.000	0.000	0.000	0.000	0.000	0.000	0.000	0.000	0.000	0.000	0.000	0.000	2.05
0.000	0.000	0.000	0.000	0.000	0.000	0.000	0.000	0.000	0.000	0.000	0.000	0.000	2.10
0.000	0.000	0.000	0.000	0.000	0.000	0.000	0.000	0.000	0.000	0.000	0.000	0.000	2.15
0.000	0.000	0.000	0.000	0.000	0.000	0.000	0.000	0.000	0.000	0.000	0.000	0.000	2.20
0.000	0.000	0.000	0.000	0.000	0.000	0.000	0.000	0.000	0.000	0.000	0.000	0.000	2.25
0.000	0.000	0.000	0.000	0.000	0.000	0.000	0.000	0.000	0.000	0.000	0.000	0.000	2.30
0.000	0.000	0.000	0.000	0.000	0.000	0.000	0.000	0.000	0.000	0.000	0.000	0.000	2.35
0.000	0.000	0.000	0.000	0.000	0.000	0.000	0.000	0.000	0.000	0.000	0.000	0.000	2.40
0.000	0.000	0.000	0.000	0.000	0.000	0.000	0.000	0.000	0.000	0.000	0.000	0.000	2.45

3 CASES

Set 6, Table E — Deviations of Mean Local Pressurant Fractions, Scaling Runs 45-47

LOCATIONS I

1	2	3	4	5	6	7	8	9	10	11	12	13	τ
0.000	0.000	0.000	0.000	0.000	0.000	0.000	0.000	0.000	0.000	0.000	0.000	0.000	0.00
-.251	1.270	-.170	1.254	1.027	1.343	-.160	-1.137	-.632	-1.002	-.895	-.178	-.448	.05
-1.093	3.601	5.120	.739	-.265	.776	-.901	-1.832	-1.278	-1.987	-1.502	-.851	-.521	.10
-1.296	4.065	6.742	.203	-1.013	.203	-1.124	-1.695	-1.353	-1.972	-1.434	-.917	-.425	.15
-.273	.256	.791	-.021	-.076	.005	-.081	-.111	-.067	-.164	-.104	-.072	-.076	.20
-.233	.204	.674	-.092	-.095	-.037	-.060	-.077	-.001	-.127	-.081	-.041	-.036	.25
-.232	.231	.617	-.118	-.120	-.011	-.059	-.055	-.002	-.101	-.070	-.028	-.043	.30
-.188	.277	.627	-.160	-.140	-.027	-.069	-.077	-.006	-.095	-.062	-.052	-.033	.35
-.231	.312	.610	-.105	-.113	-.081	-.059	-.069	-.017	-.081	-.053	-.056	-.055	.40
-.172	.319	.606	-.079	-.134	-.073	-.069	-.074	-.043	-.081	-.074	-.063	-.063	.45
-.124	.399	.655	-.153	-.183	-.101	-.098	-.080	-.058	-.093	-.072	-.055	-.045	.50
-.110	.336	.694	-.123	-.154	-.123	-.093	-.085	-.072	-.085	-.074	-.059	-.061	.55
-.112	.377	.722	-.115	-.145	-.115	-.096	-.091	-.079	-.089	-.111	-.070	-.072	.60
-.079	.383	.700	-.111	-.143	-.111	-.107	-.096	-.085	-.110	-.076	-.074	-.085	.65
-.084	.438	.741	-.117	-.149	-.117	-.112	-.101	-.090	-.118	-.099	-.085	-.096	.70
-.086	.377	.788	-.120	-.153	-.120	-.101	-.100	-.115	-.106	-.101	-.084	-.076	.75
-.106	.374	.798	-.115	-.174	-.140	-.115	-.101	-.090	-.093	-.083	-.082	-.077	.80
-.127	.467	.808	-.070	-.199	-.164	-.119	-.107	-.093	-.114	-.089	-.090	-.094	.85
-.152	.521	.822	-.040	-.226	-.189	-.109	-.109	-.127	-.117	-.095	-.096	-.089	.90
-.117	.460	.830	-.001	-.200	-.160	-.115	-.116	-.116	-.148	-.109	-.097	-.101	.95
-.069	.523	.864	-.068	-.153	-.111	-.154	-.145	-.145	-.145	-.128	-.145	-.128	1.00
0.000	0.000	0.000	0.000	0.000	0.000	0.000	0.000	0.000	0.000	0.000	0.000	0.000	1.05
0.000	0.000	0.000	0.000	0.000	0.000	0.000	0.000	0.000	0.000	0.000	0.000	0.000	1.10
0.000	0.000	0.000	0.000	0.000	0.000	0.000	0.000	0.000	0.000	0.000	0.000	0.000	1.15
0.000	0.000	0.000	0.000	0.000	0.000	0.000	0.000	0.000	0.000	0.000	0.000	0.000	1.20
0.000	0.000	0.000	0.000	0.000	0.000	0.000	0.000	0.000	0.000	0.000	0.000	0.000	1.25
0.000	0.000	0.000	0.000	0.000	0.000	0.000	0.000	0.000	0.000	0.000	0.000	0.000	1.30
0.000	0.000	0.000	0.000	0.000	0.000	0.000	0.000	0.000	0.000	0.000	0.000	0.000	1.35
0.000	0.000	0.000	0.000	0.000	0.000	0.000	0.000	0.000	0.000	0.000	0.000	0.000	1.40
0.000	0.000	0.000	0.000	0.000	0.000	0.000	0.000	0.000	0.000	0.000	0.000	0.000	1.45
0.000	0.000	0.000	0.000	0.000	0.000	0.000	0.000	0.000	0.000	0.000	0.000	0.000	1.50
0.000	0.000	0.000	0.000	0.000	0.000	0.000	0.000	0.000	0.000	0.000	0.000	0.000	1.55
0.000	0.000	0.000	0.000	0.000	0.000	0.000	0.000	0.000	0.000	0.000	0.000	0.000	1.60
0.000	0.000	0.000	0.000	0.000	0.000	0.000	0.000	0.000	0.000	0.000	0.000	0.000	1.65
0.000	0.000	0.000	0.000	0.000	0.000	0.000	0.000	0.000	0.000	0.000	0.000	0.000	1.70
0.000	0.000	0.000	0.000	0.000	0.000	0.000	0.000	0.000	0.000	0.000	0.000	0.000	1.75
0.000	0.000	0.000	0.000	0.000	0.000	0.000	0.000	0.000	0.000	0.000	0.000	0.000	1.80
0.000	0.000	0.000	0.000	0.000	0.000	0.000	0.000	0.000	0.000	0.000	0.000	0.000	1.85
0.000	0.000	0.000	0.000	0.000	0.000	0.000	0.000	0.000	0.000	0.000	0.000	0.000	1.90
0.000	0.000	0.000	0.000	0.000	0.000	0.000	0.000	0.000	0.000	0.000	0.000	0.000	1.95
0.000	0.000	0.000	0.000	0.000	0.000	0.000	0.000	0.000	0.000	0.000	0.000	0.000	2.00
0.000	0.000	0.000	0.000	0.000	0.000	0.000	0.000	0.000	0.000	0.000	0.000	0.000	2.05
0.000	0.000	0.000	0.000	0.000	0.000	0.000	0.000	0.000	0.000	0.000	0.000	0.000	2.10
0.000	0.000	0.000	0.000	0.000	0.000	0.000	0.000	0.000	0.000	0.000	0.000	0.000	2.15
0.000	0.000	0.000	0.000	0.000	0.000	0.000	0.000	0.000	0.000	0.000	0.000	0.000	2.20
0.000	0.000	0.000	0.000	0.000	0.000	0.000	0.000	0.000	0.000	0.000	0.000	0.000	2.25
0.000	0.000	0.000	0.000	0.000	0.000	0.000	0.000	0.000	0.000	0.000	0.000	0.000	2.30
0.000	0.000	0.000	0.000	0.000	0.000	0.000	0.000	0.000	0.000	0.000	0.000	0.000	2.35
0.000	0.000	0.000	0.000	0.000	0.000	0.000	0.000	0.000	0.000	0.000	0.000	0.000	2.40
0.000	0.000	0.000	0.000	0.000	0.000	0.000	0.000	0.000	0.000	0.000	0.000	0.000	2.45

3 CASES

Set 7, Table E — Deviations of Mean Local Pressurant Fractions, Scaling Runs 48-50

Locations l

1	2	3	4	5	6	7	8	9	10	11	12	13	r
0.000	0.000	0.000	0.000	0.000	0.000	0.000	0.000	0.000	0.000	0.000	0.000	0.000	0.00
.742	-.838	.862	.568	.596	.742	-.018	-.920	-.156	-.309	-.568	-.510	-.200	.05
.575	-.572	.515	.436	.450	.568	.059	-1.059	-.056	-.165	-.330	-.314	-.112	.10
.036	-.051	-.072	.087	.087	.128	.039	-.380	.074	0.000	.038	.001	.017	.15
-.240	-.055	-.050	.038	.034	.029	-.177	.703	.003	-.120	-.057	-.076	-.029	.20
-.060	-.149	.037	.046	-.073	-.041	-.114	.554	-.016	-.063	-.038	-.053	-.032	.25
-.128	-.096	-.028	.006	-.054	-.021	-.133	.543	-.022	-.035	-.006	0.000	-.031	.30
-.099	-.089	-.044	.006	-.064	-.051	-.126	.552	-.023	-.034	-.000	-.007	-.012	.35
-.089	-.126	-.031	-.027	-.120	-.089	-.100	.570	-.010	-.004	.006	.010	-.002	.40
-.082	-.158	-.083	-.018	-.107	-.075	-.098	.588	.006	.005	.011	.010	-.017	.45
-.098	-.131	-.131	-.065	-.068	-.035	-.094	.604	-.015	.010	.017	.017	-.005	.50
-.071	-.135	-.104	-.068	-.086	-.052	-.105	.627	-.032	.024	.031	.008	-.022	.55
-.060	-.161	-.094	-.062	-.094	-.060	-.099	.644	-.044	-.012	.047	.006	-.015	.60
-.071	-.176	-.133	-.064	-.064	-.071	-.091	.662	-.022	-.007	.036	.012	-.015	.65
-.082	-.171	-.120	-.099	-.120	-.082	-.060	.679	.007	-.005	.031	.034	-.011	.70
-.081	-.149	-.149	-.074	-.074	-.059	-.087	.695	-.003	.005	.002	.007	-.022	.75
-.103	-.168	-.168	-.090	-.090	-.076	-.073	.714	-.014	.031	.018	.017	-.010	.80
-.076	-.200	-.200	-.117	-.117	-.076	-.000	.733	.015	.040	.029	.036	.002	.85
-.105	-.233	-.189	-.149	-.149	-.105	-.060	.779	.024	.078	.055	.050	.013	.90
-.054	-.189	-.189	-.098	-.146	-.166	-.073	.806	-.002	.024	.029	.046	.010	.95
-.116	-.258	-.163	-.163	-.163	-.021	-.071	.826	.022	.053	.024	.043	-.006	1.00
0.000	0.000	0.000	0.000	0.000	0.000	0.000	0.000	0.000	0.000	0.000	0.000	0.000	1.05
0.000	0.000	0.000	0.000	0.000	0.000	0.000	0.000	0.000	0.000	0.000	0.000	0.000	1.10
0.000	0.000	0.000	0.000	0.000	0.000	0.000	0.000	0.000	0.000	0.000	0.000	0.000	1.15
0.000	0.000	0.000	0.000	0.000	0.000	0.000	0.000	0.000	0.000	0.000	0.000	0.000	1.20
0.000	0.000	0.000	0.000	0.000	0.000	0.000	0.000	0.000	0.000	0.000	0.000	0.000	1.25
0.000	0.000	0.000	0.000	0.000	0.000	0.000	0.000	0.000	0.000	0.000	0.000	0.000	1.30
0.000	0.000	0.000	0.000	0.000	0.000	0.000	0.000	0.000	0.000	0.000	0.000	0.000	1.35
0.000	0.000	0.000	0.000	0.000	0.000	0.000	0.000	0.000	0.000	0.000	0.000	0.000	1.40
0.000	0.000	0.000	0.000	0.000	0.000	0.000	0.000	0.000	0.000	0.000	0.000	0.000	1.45
0.000	0.000	0.000	0.000	0.000	0.000	0.000	0.000	0.000	0.000	0.000	0.000	0.000	1.50
0.000	0.000	0.000	0.000	0.000	0.000	0.000	0.000	0.000	0.000	0.000	0.000	0.000	1.55
0.000	0.000	0.000	0.000	0.000	0.000	0.000	0.000	0.000	0.000	0.000	0.000	0.000	1.60
0.000	0.000	0.000	0.000	0.000	0.000	0.000	0.000	0.000	0.000	0.000	0.000	0.000	1.65
0.000	0.000	0.000	0.000	0.000	0.000	0.000	0.000	0.000	0.000	0.000	0.000	0.000	1.70
0.000	0.000	0.000	0.000	0.000	0.000	0.000	0.000	0.000	0.000	0.000	0.000	0.000	1.75
0.000	0.000	0.000	0.000	0.000	0.000	0.000	0.000	0.000	0.000	0.000	0.000	0.000	1.80
0.000	0.000	0.000	0.000	0.000	0.000	0.000	0.000	0.000	0.000	0.000	0.000	0.000	1.85
0.000	0.000	0.000	0.000	0.000	0.000	0.000	0.000	0.000	0.000	0.000	0.000	0.000	1.90
0.000	0.000	0.000	0.000	0.000	0.000	0.000	0.000	0.000	0.000	0.000	0.000	0.000	1.95
0.000	0.000	0.000	0.000	0.000	0.000	0.000	0.000	0.000	0.000	0.000	0.000	0.000	2.00
0.000	0.000	0.000	0.000	0.000	0.000	0.000	0.000	0.000	0.000	0.000	0.000	0.000	2.05
0.000	0.000	0.000	0.000	0.000	0.000	0.000	0.000	0.000	0.000	0.000	0.000	0.000	2.10
0.000	0.000	0.000	0.000	0.000	0.000	0.000	0.000	0.000	0.000	0.000	0.000	0.000	2.15
0.000	0.000	0.000	0.000	0.000	0.000	0.000	0.000	0.000	0.000	0.000	0.000	0.000	2.20
0.000	0.000	0.000	0.000	0.000	0.000	0.000	0.000	0.000	0.000	0.000	0.000	0.000	2.25
0.000	0.000	0.000	0.000	0.000	0.000	0.000	0.000	0.000	0.000	0.000	0.000	0.000	2.30
0.000	0.000	0.000	0.000	0.000	0.000	0.000	0.000	0.000	0.000	0.000	0.000	0.000	2.35
0.000	0.000	0.000	0.000	0.000	0.000	0.000	0.000	0.000	0.000	0.000	0.000	0.000	2.40
0.000	0.000	0.000	0.000	0.000	0.000	0.000	0.000	0.000	0.000	0.000	0.000	0.000	2.45

3 CASES

Set 8, Table E — Deviations of Mean Local Pressurant Fractions, Scaling Runs 51-53

Locations 1

1	2	3	4	5	6	7	8	9	10	11	12	13	r
0.000	0.000	0.000	0.000	0.000	0.000	0.000	0.000	0.000	0.000	0.000	0.000	0.000	0.00
.172	-.351	-.044	-.454	.055	.172	-.127	.476	.390	.033	-.402	.195	-.114	.05
-.145	.130	.788	-.054	-.391	-.145	.022	-.115	.259	-.233	-.540	.372	.061	.10
-.089	.516	1.120	.399	-.324	-.070	.017	-.560	-.025	-.536	-.580	.077	.060	.15
.142	.607	.960	.562	-.030	.103	-.058	-.644	-.211	-.646	-.591	-.210	-.056	.20
.247	.566	.692	.566	.145	.315	-.072	-.560	-.289	-.609	-.513	-.358	-.129	.25
.088	.329	.432	.343	.040	.194	-.006	-.263	-.158	-.390	-.314	-.227	-.072	.30
-.040	.138	.233	.166	-.048	.101	.039	-.039	-.045	-.215	-.153	-.117	-.023	.35
-.038	.099	.171	.141	-.048	.092	.046	-.042	-.022	-.164	-.132	-.092	-.017	.40
-.035	.062	.118	.114	-.043	.075	.046	-.041	.003	-.117	-.112	-.065	-.010	.45
-.012	.028	.082	.060	-.034	.074	.035	-.039	.007	-.092	-.077	-.036	.008	.50
-.016	.028	.054	.062	-.054	.054	.039	-.026	-.005	-.075	-.051	-.020	.013	.55
-.010	.013	.013	.051	-.052	.030	.039	-.001	-.009	-.047	-.035	-.010	.021	.60
.002	-.008	-.008	-.008	-.008	.040	.027	.008	-.022	-.024	-.032	.001	.034	.65
-.076	-.013	.015	.009	.009	.062	.021	-.001	-.008	-.036	-.010	.003	.016	.70
-.047	-.083	-.001	-.002	-.083	.005	.037	.019	.013	-.005	.011	.028	.020	.75
-.026	-.073	-.051	-.069	-.073	.019	.041	.046	.023	.031	.044	.045	.049	.80
-.031	-.078	-.078	-.078	-.078	-.022	.051	.047	.060	.042	.056	.053	.055	.85
-.043	-.090	-.090	-.090	-.090	-.001	.047	.065	.040	.078	.059	.056	.059	.90
-.085	-.109	-.032	-.098	-.022	.062	.022	.046	.032	.038	.056	.048	.041	.95
-.033	-.087	-.087	-.087	-.087	-.033	.028	.039	.039	.081	.075	.081	.071	1.00
-.006	-.095	-.056	-.063	-.040	.017	.019	.030	.002	.042	.056	.049	.049	1.05
-.026	-.085	-.085	-.085	-.085	-.026	.036	.056	.017	.067	.069	.082	.071	1.10
-.025	-.085	-.085	-.113	-.058	-.014	.051	.044	.034	.067	.061	.065	.065	1.15
.013	-.050	-.050	-.101	-.050	.013	.036	.033	.004	.047	.024	.044	.040	1.20
-.013	-.078	-.078	-.078	-.078	-.013	.055	.054	.035	.045	.056	.051	.042	1.25
-.030	-.095	-.095	-.103	-.095	-.038	.070	.078	.040	.080	.058	.062	.075	1.30
.019	-.013	-.023	-.154	-.097	-.038	.034	.031	.036	.049	.035	.065	.050	1.35
.026	-.043	-.043	-.076	-.043	.026	.021	.016	.028	.017	.003	.033	.033	1.40
.010	-.060	-.060	-.060	-.060	.010	.040	.013	.023	.052	.018	.042	.033	1.45
0.000	0.000	0.000	0.000	0.000	0.000	0.000	0.000	0.000	0.000	0.000	0.000	0.000	1.50
0.000	0.000	0.000	0.000	0.000	0.000	0.000	0.000	0.000	0.000	0.000	0.000	0.000	1.55
0.000	0.000	0.000	0.000	0.000	0.000	0.000	0.000	0.000	0.000	0.000	0.000	0.000	1.60
0.000	0.000	0.000	0.000	0.000	0.000	0.000	0.000	0.000	0.000	0.000	0.000	0.000	1.65
0.000	0.000	0.000	0.000	0.000	0.000	0.000	0.000	0.000	0.000	0.000	0.000	0.000	1.70
0.000	0.000	0.000	0.000	0.000	0.000	0.000	0.000	0.000	0.000	0.000	0.000	0.000	1.75
0.000	0.000	0.000	0.000	0.000	0.000	0.000	0.000	0.000	0.000	0.000	0.000	0.000	1.80
0.000	0.000	0.000	0.000	0.000	0.000	0.000	0.000	0.000	0.000	0.000	0.000	0.000	1.85
0.000	0.000	0.000	0.000	0.000	0.000	0.000	0.000	0.000	0.000	0.000	0.000	0.000	1.90
0.000	0.000	0.000	0.000	0.000	0.000	0.000	0.000	0.000	0.000	0.000	0.000	0.000	1.95
0.000	0.000	0.000	0.000	0.000	0.000	0.000	0.000	0.000	0.000	0.000	0.000	0.000	2.00
0.000	0.000	0.000	0.000	0.000	0.000	0.000	0.000	0.000	0.000	0.000	0.000	0.000	2.05
0.000	0.000	0.000	0.000	0.000	0.000	0.000	0.000	0.000	0.000	0.000	0.000	0.000	2.10
0.000	0.000	0.000	0.000	0.000	0.000	0.000	0.000	0.000	0.000	0.000	0.000	0.000	2.15
0.000	0.000	0.000	0.000	0.000	0.000	0.000	0.000	0.000	0.000	0.000	0.000	0.000	2.20
0.000	0.000	0.000	0.000	0.000	0.000	0.000	0.000	0.000	0.000	0.000	0.000	0.000	2.25
0.000	0.000	0.000	0.000	0.000	0.000	0.000	0.000	0.000	0.000	0.000	0.000	0.000	2.30
0.000	0.000	0.000	0.000	0.000	0.000	0.000	0.000	0.000	0.000	0.000	0.000	0.000	2.35
0.000	0.000	0.000	0.000	0.000	0.000	0.000	0.000	0.000	0.000	0.000	0.000	0.000	2.40
0.000	0.000	0.000	0.000	0.000	0.000	0.000	0.000	0.000	0.000	0.000	0.000	0.000	2.45

3 CASES

Set 9, Table E — Deviations of Mean Local Pressurant Fractions, Scaling Runs 54-56

Locations I

1	2	3	4	5	6	7	8	9	10	11	12	13	τ
0.000	0.000	0.000	0.000	0.000	0.000	0.000	0.000	0.000	0.000	0.000	0.000	0.000	0.00
.266	.234	.706	.757	.287	.295	-.750	-.099	-.247	-.053	-.590	-.488	-.319	.05
.333	.926	1.884	1.970	1.013	.410	-1.063	-1.017	-.801	-.795	-1.119	-1.040	-.697	.10
.399	1.617	3.062	3.183	1.739	.524	-1.379	-1.936	-1.357	-1.539	-1.648	-1.594	-1.077	.15
.519	2.234	4.034	4.075	2.298	.605	-1.710	-2.637	-1.830	-2.070	-2.136	-2.052	-1.408	.20
.324	1.602	2.961	2.959	1.643	.542	-1.206	-1.919	-1.295	-1.521	-1.524	-1.468	-1.013	.25
.108	.910	1.792	1.745	.928	.381	-.817	-1.130	-.710	-.926	-.856	-.832	-.583	.30
-.109	.223	.623	.575	.234	.204	-.339	-.370	-.136	-.339	-.194	-.213	-.155	.35
-.155	.053	.308	.296	.070	.102	-.188	-.170	.011	-.163	-.049	-.062	-.048	.40
-.154	-.004	.183	.214	.030	.027	-.120	-.094	.057	-.082	-.021	-.015	-.017	.45
-.152	-.048	.105	.135	-.003	-.010	-.090	-.040	.093	-.037	.012	.021	.006	.50
-.139	-.055	.074	.080	-.025	.001	-.090	-.019	.110	-.022	.035	.032	.019	.55
-.102	-.061	.039	.048	-.043	-.011	-.083	-.006	.110	0.000	.044	.034	.033	.60
-.063	-.072	.011	.018	-.055	-.048	-.066	.012	.090	.030	.049	.039	.050	.65
-.059	-.064	-.001	.012	-.059	-.059	-.058	.037	.079	.031	.064	.049	.047	.70
-.052	-.062	-.015	.014	-.051	-.051	-.063	.017	.074	.017	.070	.054	.039	.75
-.059	-.061	-.008	-.006	-.041	-.041	-.058	.024	.059	.042	.062	.053	.034	.80
-.035	-.064	-.062	-.026	-.031	-.031	-.057	.020	.045	.032	.076	.080	.062	.85
-.054	-.061	-.041	-.038	-.038	-.038	-.072	.039	.043	.057	.079	.069	.057	.90
-.079	-.060	-.017	-.016	-.016	-.016	-.039	.027	.023	.052	.053	.053	.028	.95
-.023	-.064	-.064	-.023	-.043	-.043	-.035	.049	.026	.049	.065	.061	.050	1.00
-.015	-.066	-.072	-.028	-.028	-.062	-.017	.054	.037	.020	.063	.063	.051	1.05
.022	-.055	-.085	-.046	-.046	-.046	-.019	.057	.025	.028	.055	.063	.049	1.10
-.007	-.040	-.040	-.021	-.008	-.034	-.035	.048	.003	.013	.050	.042	.028	1.15
-.012	-.041	-.041	-.012	-.007	-.018	-.030	.048	.002	.012	.040	.030	.032	1.20
0.000	-.043	-.043	-.034	0.000	-.034	-.026	.048	.010	.007	.038	.048	.037	1.25
.006	-.043	-.051	-.027	-.002	-.068	-.019	.054	-.006	.028	.045	.037	.048	1.30
.037	-.014	-.063	-.013	-.012	-.062	-.032	.043	.003	.006	.039	.039	.030	1.35
.011	-.037	-.060	-.040	-.040	-.040	-.001	.063	0.000	.037	.052	.037	.021	1.40
-.017	-.037	-.034	-.070	-.031	-.031	0.000	.061	.018	.042	.043	.050	.030	1.45
-.024	-.040	-.077	-.051	-.022	-.034	-.008	.076	.012	.048	.048	.042	.034	1.50
.001	-.045	-.086	-.049	-.003	-.040	-.008	.069	.014	.049	.039	.044	.017	1.55
-.001	-.057	-.077	-.057	-.001	-.057	-.015	.064	.025	.046	.052	.052	.030	1.60
-.006	-.062	-.076	-.031	-.019	-.053	-.019	.064	.014	.050	.052	.054	.036	1.65
.003	-.054	-.062	-.044	-.044	-.046	-.012	.060	.016	.060	.037	.058	.033	1.70
-.001	-.060	-.063	-.061	-.010	-.061	-.021	.066	.025	.037	.054	.058	.037	1.75
.027	-.032	-.080	-.032	-.021	-.059	-.021	.071	-.008	.052	.043	.030	.030	1.80
.039	-.021	-.037	-.047	.023	-.068	-.027	.040	.003	.040	.008	.025	.029	1.85
.071	.009	-.050	-.006	.012	-.039	-.051	.039	-.007	.010	.011	-.001	.008	1.90
.018	-.044	-.044	.018	.018	.018	-.024	.026	-.001	.007	.012	.001	-.003	1.95
0.000	0.000	0.000	0.000	0.000	0.000	0.000	0.000	0.000	0.000	0.000	0.000	0.000	2.00
0.000	0.000	0.000	0.000	0.000	0.000	0.000	0.000	0.000	0.000	0.000	0.000	0.000	2.05
0.000	0.000	0.000	0.000	0.000	0.000	0.000	0.000	0.000	0.000	0.000	0.000	0.000	2.10
0.000	0.000	0.000	0.000	0.000	0.000	0.000	0.000	0.000	0.000	0.000	0.000	0.000	2.15
0.000	0.000	0.000	0.000	0.000	0.000	0.000	0.000	0.000	0.000	0.000	0.000	0.000	2.20
0.000	0.000	0.000	0.000	0.000	0.000	0.000	0.000	0.000	0.000	0.000	0.000	0.000	2.25
0.000	0.000	0.000	0.000	0.000	0.000	0.000	0.000	0.000	0.000	0.000	0.000	0.000	2.30
0.000	0.000	0.000	0.000	0.000	0.000	0.000	0.000	0.000	0.000	0.000	0.000	0.000	2.35
0.000	0.000	0.000	0.000	0.000	0.000	0.000	0.000	0.000	0.000	0.000	0.000	0.000	2.40
0.000	0.000	0.000	0.000	0.000	0.000	0.000	0.000	0.000	0.000	0.000	0.000	0.000	2.45

3 CASES

Set 10, Table E — Deviations of Mean Local Pressurant Fractions, Scaling Runs 58-60

Locations I

1	2	3	4	5	6	7	8	9	10	11	12	13	τ
0.000	0.000	0.000	0.000	0.000	0.000	0.000	0.000	0.000	0.000	0.000	0.000	0.000	0.00
-.032	.308	.043	.192	-.024	-.015	-.005	-.141	-.052	-.097	-.082	-.062	-.029	.05
-.065	.615	.085	.383	-.048	-.031	-.012	-.284	-.105	-.194	-.165	-.125	-.059	.10
-.084	.645	.284	.696	-.023	.037	-.004	-.455	-.190	-.332	-.295	-.199	-.085	.15
-.096	.539	.561	1.068	.027	.149	.011	-.640	-.292	-.488	-.447	-.278	-.109	.20
.206	.643	1.496	1.260	.506	.583	-.040	-1.354	-.744	-1.126	-.764	-.453	-.203	.25
.170	.569	1.579	1.318	.499	.620	-.054	-1.356	-.719	-1.151	-.788	-.477	-.213	.30
.140	.540	1.502	1.254	.454	.572	-.074	-1.245	-.635	-1.084	-.742	-.474	-.210	.35
.111	.473	1.322	1.109	.399	.505	-.091	-1.071	-.528	-.950	-.656	-.435	-.194	.40
.083	.391	1.102	.931	.342	.429	-.109	-.872	-.410	-.791	-.554	-.381	-.171	.45
.056	.310	.881	.754	.285	.354	-.126	-.672	-.292	-.630	-.450	-.327	-.146	.50
.034	.231	.668	.504	.231	.281	-.141	-.478	-.179	-.475	-.350	-.274	-.124	.55
.045	.169	.515	.475	.203	.235	-.146	-.364	-.136	-.379	-.290	-.227	-.102	.60
.038	.128	.395	.387	.169	.206	-.136	-.283	-.105	-.304	-.238	-.179	-.081	.65
.024	.093	.290	.316	.130	.181	-.119	-.212	-.077	-.240	-.189	-.136	-.061	.70
.006	.060	.186	.246	.097	.156	-.101	-.147	-.050	-.178	-.141	-.094	-.043	.75
.000	.037	.116	.195	.083	.143	-.079	-.104	-.039	-.137	-.110	-.078	-.036	.80
.011	.020	.069	.154	.075	.125	-.053	-.068	-.030	-.102	-.083	-.066	-.050	.85
.021	.007	.041	.122	.063	.113	-.034	-.039	-.019	-.075	-.063	-.059	-.075	.90
.010	-.001	.024	.095	.054	.094	-.032	-.028	-.009	-.063	-.051	-.049	-.051	.95
.007	-.035	-.035	.063	.021	.078	-.038	-.003	-.007	-.015	-.013	-.019	-.010	1.00
.013	-.029	-.037	.056	.027	.071	-.033	-.004	-.009	-.019	-.013	-.018	-.011	1.05
.021	-.023	-.341	.049	.033	.064	-.027	-.007	-.011	-.022	-.014	-.017	-.011	1.10
.028	-.017	-.044	.042	.039	.057	-.021	-.007	-.013	-.025	-.014	-.017	-.011	1.15
.025	-.017	-.035	.037	.047	.063	-.023	-.009	-.017	-.029	-.014	-.017	-.015	1.20
.023	-.014	-.023	.031	.052	.068	-.028	-.011	-.021	-.033	-.015	-.017	-.017	1.25
.023	-.012	-.011	.026	.058	.074	-.032	-.014	-.025	-.037	-.017	-.016	-.020	1.30
.025	-.009	-.009	.033	.054	.070	-.032	-.015	-.031	-.034	-.019	-.015	-.019	1.35
.025	-.013	-.012	.040	.051	.067	-.030	-.014	-.032	-.029	-.021	-.016	-.017	1.40
.027	-.017	-.017	.047	.047	.063	-.028	-.014	-.034	-.024	-.023	-.017	-.017	1.45
.037	-.011	-.021	.043	.043	.059	-.027	-.017	-.031	-.021	-.024	-.017	-.017	1.50
.041	-.007	-.028	.036	.036	.052	-.027	-.019	-.027	-.023	-.019	-.013	-.011	1.55
.045	-.004	-.036	.029	.029	.046	-.024	-.021	-.022	-.025	-.013	-.007	-.006	1.60
.042	-.008	-.041	.025	.025	.042	-.022	-.015	-.021	-.026	-.003	0.000	-.001	1.65
.039	-.010	-.044	.023	.023	.039	-.024	-.010	-.021	-.025	-.001	.002	.005	1.70
.037	-.013	-.047	.020	.020	.037	-.027	-.005	-.021	-.021	-.001	.003	.011	1.75
.035	-.015	-.049	.017	.017	.035	-.032	-.001	-.019	-.014	-.002	.002	.020	1.80
.033	-.016	-.050	.017	.017	.031	-.035	.003	-.017	-.009	-.001	-.001	.025	1.85
.037	-.017	-.032	.016	.016	.025	-.034	.006	-.016	-.006	.001	-.003	.024	1.90
.041	-.019	-.054	.015	.015	.019	-.029	.007	-.013	-.005	-.002	-.001	.020	1.95
.049	-.020	-.055	.014	.014	.012	-.023	.007	-.009	-.004	-.004	-.001	.015	2.00
.053	-.016	-.051	.014	.018	.006	-.021	.006	-.006	-.006	-.006	-.003	.009	2.05
.053	-.011	-.047	.015	.024	.001	-.021	.003	-.006	-.005	-.006	-.007	.004	2.10
.053	-.006	-.042	.015	.029	-.001	-.022	.003	-.005	-.004	-.007	-.011	-.001	2.15
.045	-.007	-.043	.012	.027	.007	-.023	.002	-.005	-.002	-.006	-.012	-.001	2.20
.039	-.015	-.045	.011	.032	.017	-.025	.006	-.006	-.004	-.001	-.011	-.003	2.25
.033	-.021	-.045	.009	.038	.027	-.029	.010	-.008	-.008	.004	-.009	-.003	2.30
.027	-.027	-.045	.008	.044	.027	-.031	.012	-.009	-.009	.006	-.007	-.001	2.35
.020	-.023	-.046	.001	.039	.031	-.026	.011	-.006	-.008	.003	-.004	.003	2.40
.014	-.018	-.047	-.005	.033	.038	-.021	.009	-.003	-.008	-.001	-.003	.007	2.45

3 CASES

Set 11, Table E — Deviations of Mean Local Pressurant Fractions, Scaling Runs 61-63

Locations I

1	2	3	4	5	6	7	8	9	10	11	12	13	τ
0.000	0.000	0.000	0.000	0.000	0.000	0.000	0.000	0.000	0.000	0.000	0.000	0.000	0.00
3.627	3.813	3.621	3.546	3.682	4.353	.461	-9.525	-7.588	-2.489	-3.519	-1.558	1.577	.05
2.859	3.261	3.307	3.118	2.969	3.967	.333	-7.707	-6.160	-2.454	-3.093	-1.498	1.087	.10
2.092	2.725	2.995	2.691	2.236	3.580	.204	-5.883	-4.733	-2.417	-2.669	-1.437	.598	.15
1.323	2.190	2.681	2.263	1.543	3.192	.075	-4.062	-3.306	-2.382	-2.245	-1.377	.108	.20
.544	1.594	2.316	1.793	.806	2.723	-.044	-2.180	-1.833	-2.285	-1.777	-1.283	-.369	.25
.285	1.223	1.996	1.501	.492	2.153	-.007	-1.454	-1.217	-1.973	-1.450	-1.096	-.449	.30
.208	.987	1.619	1.226	.372	1.634	-.003	-1.150	-.961	-1.600	-1.202	-.923	-.410	.35
.132	.751	1.240	.950	.252	1.516	.002	-.844	-.700	-1.225	-.952	-.747	-.372	.40
.056	.513	.860	.673	.131	1.199	.005	-.539	-.442	-.851	-.702	-.573	-.333	.45
.001	.326	.539	.450	.049	.954	-.005	-.296	-.239	-.548	-.496	-.431	-.303	.50
-.001	.258	.429	.369	.042	.882	-.014	-.247	-.202	-.467	-.416	-.367	-.264	.55
.003	.192	.334	.288	.028	.807	-.014	-.204	-.174	-.394	-.342	-.303	-.219	.60
.005	.124	.241	.207	.013	.732	-.014	-.162	-.146	-.321	-.268	-.236	-.174	.65
.001	.110	.185	.138	-.015	.695	-.010	-.133	-.133	-.269	-.228	-.201	-.145	.70
-.004	.108	.136	.089	-.037	.662	-.008	-.106	-.121	-.222	-.192	-.177	-.123	.75
-.014	.093	.091	.063	-.043	.639	-.010	-.090	-.112	-.183	-.163	-.155	-.110	.80
-.025	.067	.057	.059	-.033	.619	-.021	-.089	-.106	-.151	-.142	-.133	-.109	.85
-.016	.042	.031	.042	-.039	.600	-.029	-.075	-.094	-.130	-.120	-.110	-.098	.90
.005	.011	.011	.011	-.058	.581	-.037	-.055	-.080	-.121	-.100	-.091	-.078	.95
-.005	-.005	-.020	-.020	-.050	.528	-.052	-.038	-.061	-.063	-.082	-.068	-.072	1.00
.017	-.023	-.029	-.039	-.029	.556	-.050	-.044	-.078	-.070	-.079	-.064	-.062	1.05
.033	-.021	-.026	-.048	-.029	.563	-.047	-.042	-.089	-.074	-.081	-.070	-.063	1.10
.021	-.003	-.018	-.042	-.032	.567	-.044	-.041	-.088	-.082	-.091	-.072	-.072	1.15
.007	-.003	-.011	-.021	-.020	.571	-.043	-.046	-.093	-.090	-.095	-.070	-.078	1.20
-.005	-.008	-.008	-.010	-.008	.570	-.044	-.046	-.096	-.093	-.093	-.074	-.078	1.25
.010	-.014	-.014	-.028	-.014	.581	-.044	-.046	-.090	-.089	-.092	-.080	-.076	1.30
.020	-.014	-.023	-.034	-.023	.598	-.044	-.044	-.089	-.087	-.092	-.086	-.078	1.35
.020	-.002	-.033	-.033	-.033	.609	-.043	-.042	-.087	-.083	-.095	-.089	-.081	1.40
.016	.003	-.016	-.033	-.033	.599	-.047	-.046	-.088	-.091	-.095	-.085	-.080	1.45
.010	.007	.007	-.030	-.030	.586	-.057	-.050	-.093	-.091	-.095	-.084	-.080	1.50
.002	.002	.002	-.035	-.035	.584	-.057	-.046	-.091	-.084	-.091	-.074	-.070	1.55
.010	-.010	-.010	-.048	-.048	.581	-.051	-.046	-.082	-.080	-.087	-.062	-.063	1.60
.032	-.020	-.020	-.061	-.044	.574	-.052	-.046	-.080	-.074	-.083	-.057	-.063	1.65
.036	-.026	-.026	-.061	-.022	.571	-.057	-.042	-.087	-.068	-.088	-.060	-.065	1.70
.025	-.018	-.022	-.042	-.003	.565	-.059	-.044	-.095	-.076	-.093	-.065	-.070	1.75
.024	.015	-.013	-.031	-.004	.558	-.063	-.045	-.102	-.089	-.093	-.072	-.079	1.80
.020	.020	-.020	-.037	-.020	.578	-.067	-.045	-.097	-.086	-.091	-.073	-.079	1.85
.018	.008	-.032	-.037	-.032	.587	-.065	-.045	-.093	-.073	-.089	-.071	-.076	1.90
.032	-.003	-.023	-.044	-.044	.581	-.059	-.044	-.091	-.060	-.095	-.073	-.076	1.95
.025	.005	-.015	-.056	-.051	.576	-.051	-.039	-.089	-.056	-.097	-.074	-.076	2.00
.024	.024	-.022	-.072	-.034	.565	-.047	-.034	-.091	-.063	-.094	-.074	-.078	2.05
.031	.031	-.029	-.076	-.029	.557	-.036	-.042	-.089	-.071	-.095	-.074	-.078	2.10
.023	.023	-.020	-.054	-.020	.556	-.035	-.047	-.087	-.078	-.100	-.075	-.078	2.15
.026	.026	-.003	-.047	-.003	.554	-.052	-.049	-.099	-.080	-.104	-.080	-.079	2.20
.030	.035	-.010	-.052	-.013	.565	-.057	-.045	-.105	-.079	-.100	-.084	-.078	2.25
.016	.033	-.010	-.042	-.027	.567	-.057	-.042	-.106	-.076	-.094	-.087	-.074	2.30
.014	.033	-.010	-.040	-.040	.573	-.055	-.044	-.104	-.070	-.100	-.085	-.072	2.35
.025	.053	-.012	-.055	-.055	.567	-.049	-.043	-.100	-.066	-.100	-.081	-.073	2.40
.033	.070	-.019	-.069	-.043	.559	-.050	-.041	-.104	-.065	-.107	-.085	-.074	2.45

3 CASES

Set 12, Table E — Deviations of Mean Local Pressurant Fractions, Scaling Runs 64-66

Locations I

1	2	3	4	5	6	7	8	9	10	11	12	13	τ
0.000	0.000	0.000	0.000	0.000	0.000	0.000	0.000	0.000	0.000	0.000	0.000	0.000	0.00
-.359	.059	.953	.059	.059	-.807	.385	-.567	-.034	-.315	.133	.127	.306	.05
-.712	.126	1.914	.126	.126	-1.606	.744	-1.124	-.094	-.622	.273	.262	.588	.10
-.682	.130	1.881	.197	.089	-1.465	.643	-1.080	-.069	-.632	.233	.217	.538	.15
-.541	.106	1.540	.264	.073	-1.068	.421	-.876	-.034	-.556	.144	.126	.395	.20
-.398	.034	1.200	.332	.059	-.668	.200	-.672	.003	-.479	.058	.037	.253	.25
-.205	.031	.653	.285	.029	-.230	-.010	-.350	.032	-.292	-.005	-.022	.091	.30
-.108	.029	.313	.193	-.001	-.063	-.084	-.158	.045	-.155	-.008	-.022	.025	.35
-.077	.064	.157	.124	-.011	-.048	-.087	-.088	.043	-.093	.006	-.003	.015	.40
-.059	.087	.106	.098	-.038	-.043	-.088	-.061	.037	-.066	.014	.010	.011	.45
-.047	.068	.089	.053	-.069	-.045	-.077	-.036	.031	-.037	.029	.022	.013	.50
-.045	.038	.059	.017	-.068	-.045	-.057	-.014	.036	-.015	.033	.031	.020	.55
-.054	.024	.030	.020	-.076	-.054	-.041	-.002	.048	.003	.034	.036	.027	.60
-.059	.002	.029	.002	-.081	-.059	-.039	.010	.046	.017	.046	.037	.036	.65
-.039	-.043	.017	-.043	-.061	-.039	-.039	.034	.041	.017	.061	.042	.040	.70
-.023	-.045	-.038	-.045	-.045	-.023	-.038	.037	.038	.033	.053	.050	.044	.75
-.024	-.047	-.047	-.047	-.047	-.024	-.039	.040	.038	.042	.061	.060	.035	.80
-.026	-.048	-.048	-.048	-.048	-.026	-.037	.041	.043	.038	.070	.059	.038	.85
-.033	-.057	-.057	-.057	-.057	-.033	-.034	.053	.038	.054	.082	.064	.037	.90
-.030	-.053	-.072	-.072	-.072	-.049	-.008	.059	.053	.059	.078	.068	.041	.95
-.002	-.073	-.097	-.097	-.097	-.073	.015	.081	.057	.072	.091	.076	.052	1.00
-.017	-.040	-.040	-.048	-.048	-.024	0.000	.051	.022	.033	.045	.041	.030	1.05
.003	-.040	-.040	-.050	-.032	-.006	-.006	.054	.018	.021	.036	.031	.008	1.10
.029	-.042	-.042	-.042	.003	-.015	-.013	.046	.008	.032	.030	.015	-.013	1.15
-.010	-.036	-.036	-.036	-.036	-.010	.003	.057	.023	.026	.034	.022	.006	1.20
-.010	-.038	-.002	-.068	-.068	-.041	-.001	.057	.043	.055	.040	.032	.004	1.25
.041	-.015	-.010	-.050	-.022	-.043	-.028	.050	0.000	.038	.025	.010	-.001	1.30
.036	-.001	-.027	-.054	-.027	.001	-.012	.049	-.003	.008	.026	.011	-.006	1.35
.006	-.024	-.024	-.024	-.024	.006	-.011	.034	.016	.025	.009	.008	0.000	1.40
.005	-.025	-.025	-.048	-.048	-.019	-.021	.064	.003	.038	.040	.015	.020	1.45
.008	.032	-.023	-.092	-.023	-.064	-.013	.059	.027	.029	.019	.027	.015	1.50
.043	.029	.012	-.054	.012	-.059	-.047	.036	-.004	.026	-.002	.005	.005	1.55
.038	.006	.006	-.001	.006	-.036	-.049	.033	-.020	.009	0.000	.006	0.000	1.60
.020	-.013	-.013	-.013	-.013	-.029	-.029	.036	-.007	.022	.002	.016	.018	1.65
.010	-.022	-.022	-.033	-.033	-.001	-.012	.054	-.007	.020	.009	.015	.024	1.70
.049	-.013	-.013	-.067	-.025	-.034	-.001	.045	.003	.010	.002	.021	.020	1.75
.046	.013	.013	-.023	.013	.010	-.022	.019	-.015	-.014	-.022	-.008	-.008	1.80
0.000	0.000	0.000	0.000	0.000	0.000	0.000	0.000	0.000	0.000	0.000	0.000	0.000	1.85
0.000	0.000	0.000	0.000	0.000	0.000	0.000	0.000	0.000	0.000	0.000	0.000	0.000	1.90
0.000	0.000	0.000	0.000	0.000	0.000	0.000	0.000	0.000	0.000	0.000	0.000	0.000	1.95
0.000	0.000	0.000	0.000	0.000	0.000	0.000	0.000	0.000	0.000	0.000	0.000	0.000	2.00
0.000	0.000	0.000	0.000	0.000	0.000	0.000	0.000	0.000	0.000	0.000	0.000	0.000	2.05
0.000	0.000	0.000	0.000	0.000	0.000	0.000	0.000	0.000	0.000	0.000	0.000	0.000	2.10
0.000	0.000	0.000	0.000	0.000	0.000	0.000	0.000	0.000	0.000	0.000	0.000	0.000	2.15
0.000	0.000	0.000	0.000	0.000	0.000	0.000	0.000	0.000	0.000	0.000	0.000	0.000	2.20
0.000	0.000	0.000	0.000	0.000	0.000	0.000	0.000	0.000	0.000	0.000	0.000	0.000	2.25
0.000	0.000	0.000	0.000	0.000	0.000	0.000	0.000	0.000	0.000	0.000	0.000	0.000	2.30
0.000	0.000	0.000	0.000	0.000	0.000	0.000	0.000	0.000	0.000	0.000	0.000	0.000	2.35
0.000	0.000	0.000	0.000	0.000	0.000	0.000	0.000	0.000	0.000	0.000	0.000	0.000	2.40
0.000	0.000	0.000	0.000	0.000	0.000	0.000	0.000	0.000	0.000	0.000	0.000	0.000	2.45

3 CASES

LIST OF SYMBOLS

c_p	Molar specific heat at constant pressure
c_v	Molar specific heat at constant volume
h_s	Specific enthalpy of pressurant at T_s
i	Index referring to spatial points (subscript)
N	Number of moles
P	Absolute pressure
P_0	Initial absolute pressure
$\dot{Q}$	Heat-removal rate
R	Universal gas constant
T	Absolute temperature
$\bar{T}$	Mean absolute temperature
T_a	Resident air temperature
T_0	Initial absolute temperature
T_p	Pressurant absolute temperature
U	Total internal energy of chamber contents
u	Local specific internal energy
$\bar{u}$	Mean specific internal energy
$\bar{u}_a$	Mean specific internal energy of resident air
u_0	Local specific internal energy at T_0
V	Chamber volume
X	Pressurant mole fraction
β	Dimensionless parameter characterizing molar heat-transfer coefficient
γ	Ratio of specific heats: c_p/c_v
θ	Characteristic time
θ_c	θ evaluated at time just prior to $t = t_c$
ξ	Dimensionless pressurant deviation
τ	Dimensionless time

REFERENCES

1. H.W. Carhart and G.H. Fielding, "Application of Gaseous Fire Extinguishants in Submarines," paper presented on Halogenated Fire Extinguishing Agents, National Academy of Sciences, National Research Council (1972).

2. P.A. Tatem, R.G. Gann, and H.W. Carhart, "Pressurization with Nitrogen as an Extinguishant for Fires in Confined Spaces," Combust. Sci. Technol. **7**, 213-218 (1973).

3. P.A. Tatem, R.G. Gann, and H.W. Carhart, "Pressurization with Nitrogen as an Extinguishant for Fires in Confined Spaces: II. Cellulosic and Fabric Fuels," Combust. Sci. Technol. **9**, 255-259 (1974).

4. R.G. Gann, J.P. Stone, P.A. Tatem, F.W. Williams, and H.W. Carhart, "Suppression of Fires in Confined Spaces by Nitrogen Pressurization: III. Extinction Limits for Liquid Pool Fires," Combust. Sci. Technol. **18**, 155-163 (1978).

5. D.P. Dressler, R.S. Robinson, R.G. Gann, J.P. Stone, F.W. Williams, and H.W. Carhart, "Biological Effect of Fire Suppression by Nitrogen Pressurization in Enclosed Environments," J. Combust. Toxicol. **4**, 235 (1977).

6. R.C. Corlett, "Concentration and Temperature Similarity," in *Heat Transfer in Fires*, P.L. Blackshear, ed., Scripta Book Co., Washington, D. C., 1974, pp. 153-162.

7. J.P. Stone, J.I. Alexander, and F.W. Williams, NRL Memorandum Report 3740, Mar. 1978.

8. J.P. Stone, J.I. Alexander, and F.W. Williams, NRL Memorandum Report 3776, May 1978.

9. J.P. Stone, J.I. Alexander, and F.W. Williams, NRL Memorandum Report 3791, June 1978.

10. J.P. Stone, J.I. Alexander, and F.W. Williams, NRL Memorandum Report 3792, July 1978.

11. J.P. Stone, J.I. Alexander, and F.W. Williams, NRL Memorandum Report 3793, Aug. 1978.

12. R.C. Corlett, J.P. Stone, and F.W. Williams, "Scale Modeling of Inert Pressurant Distribution," Fire Technol. **16**, 259-272 (1980).