NRL Report 8482

UNCLASSIFIED

Injection of Intense Pulsed-Ion Beams into Tokamaks with Application to Plasma Heating and Current Maintenance

WALLACE M. MANHEIMER AND NIELS K. WINSOR

Plasma Theory Branch
Plasma Physics Division

June 24, 1981

NAVAL RESEARCH LABORATORY
Washington, D.C.

Approved for public release; distribution unlimited.

SECURITY CLASSIFICATION OF THIS PAGE (When Data Entered)

REPORT DOCUMENTATION PAGE		READ INSTRUCTIONS BEFORE COMPLETING FORM
1. REPORT NUMBER NRL Report 8482	2. GOVT ACCESSION NO.	3. RECIPIENT'S CATALOG NUMBER
4. TITLE (and Subtitle) INJECTION OF INTENSE PULSED-ION BEAMS INTO TOKAMAKS WITH APPLICATION TO PLASMA HEATING AND CURRENT MAINTENANCE		5. TYPE OF REPORT & PERIOD COVERED Interim report on a continuing NRL problem. 6. PERFORMING ORG. REPORT NUMBER
7. AUTHOR(s) Wallace M. Manheimer and Niels K. Winsor		8. CONTRACT OR GRANT NUMBER(s)
9. PERFORMING ORGANIZATION NAME AND ADDRESS Naval Research Laboratory Washington, DC 20375		10. PROGRAM ELEMENT, PROJECT, TASK AREA & WORK UNIT NUMBERS
11. CONTROLLING OFFICE NAME AND ADDRESS U.S. Department of Energy Washington, DC 20545		12. REPORT DATE June 24, 1981 13. NUMBER OF PAGES 19
14. MONITORING AGENCY NAME & ADDRESS(if different from Controlling Office)		15. SECURITY CLASS. (of this report) UNCLASSIFIED 15a. DECLASSIFICATION/DOWNGRADING SCHEDULE

16. DISTRIBUTION STATEMENT (of this Report)

Approved for public release; distribution unlimited.

17. DISTRIBUTION STATEMENT (of the abstract entered in Block 20, if different from Report)

18. SUPPLEMENTARY NOTES

19. KEY WORDS (Continue on reverse side if necessary and identify by block number)

Ion beams
Plasma heating
Tokamaks

20. ABSTRACT (Continue on reverse side if necessary and identify by block number)

This report examines various schemes by which an intense pulsed ion beam can be injected into a tokamak. There are several schemes which appear to be viable just as the plasma is being formed, but which cannot work for a steady state plasma. All schemes considered here use parallel injection. Once the beam is in the plasma, the heating and current maintenance are calculated. It is found that intense pulsed beams with reasonable energy should be capable of heating the plasma to breakeven and ignition.

DD FORM 1 JAN 73 1473 EDITION OF 1 NOV 65 IS OBSOLETE
S/N 0102-014-6601

SECURITY CLASSIFICATION OF THIS PAGE (When Data Entered)

UNCLASSIFIED

CONTENTS

I. INTRODUCTION 1

II. THE EQUATION FOR BEAM AND PLASMA 2

III. INJECTION INTO A FULL-DENSITY, LOW-VOLUME PLASMA 4

IV. BEAM INJECTION INTO A FULL-VOLUME, LOW-DENSITY PLASMA 7

V. BEAM TRAPPING WITH A PULSED STABILIZING OR POLOIDAL FIELD .. 10

VI. REVIEW OF STABILITY OF INTENSE BEAMS IN PLASMAS 10

VII. CALCULATIONS OF THE DYNAMICS OF TOKAMAK PLASMAS 11

VIII. SUGGESTIONS FOR SMALL-SCALE EXPERIMENTS 14

IX. CONCLUSIONS 15

X. ACKNOWLEDGMENTS 15

XI. REFERENCES 15

UNCLASSIFIED

INJECTION OF INTENSE PULSED-ION BEAMS INTO TOKAMAKS WITH APPLICATION TO PLASMA HEATING AND CURRENT MAINTENANCE

I. INTRODUCTION

This report examines the possibility of injecting intense pulsed ion beams into a tokamak plasma to heat it and maintain its current. Several obstacles must be overcome to accomplish these objectives. First, the ion beam must be produced; second, it must be injected into the toroidal chamber; and third, it must deposit its energy in the plasma. The crucial problem here is the injection [1,2]. Our initial work [1] suggested perpendicular injection into a steady state plasma. The present work concentrates on a much easier problem, parallel injection into the tokamak just as the plasma is being formed.

There are now several sources of intense pulsed ion beams, and the technology is advancing very rapidly. For instance reflex tetrodes produce roughly 1 MeV, 250 kA beams of 50 to 60 nsec duration with efficiency of about 55%. Magnetically insulated diodes can produce 2 MeV, 400 kA beams of 85 nsec duration with 80% efficiency. Also, ion beams with energies in excess of 1 MJ should be available very soon [3]. The high efficiencies and energies make these beams extremely attractive sources for heating plasmas.

Several injection schemes seem to be viable if injection takes place just as the plasma is created. The ion beam is injected into a partially formed plasma and is trapped, and the remaining plasma is formed about it. This means either building up the density by fast gas puffing and/or building up the current in the conventional way or possibly more rapidly after the beam is injected. The key point then is that the beam can be injected only once and cannot be used as an external power source in the conventional sense.

Whether the plasma heats up and then decays, or else reaches ignition, depends on the parameters of the beam and plasma. The beam pulse time for these schemes should be that the beam (or beams) just fit around the torus. This can be done either if the ion diode times can be extended from about 100 to 300 nsec, or if more than one injection port can be used.

Once the beam is trapped in the torus, the next question is its coupling to the plasma. Clearly the slowing down time of the beam should be comparable to or less than the energy containment time of the plasma. We assume classical slowing down of the beam, neoclassical ion losses and an electron energy confinement time τ_e which scales as the density times the radius squared [4]. We emphasize, however, that our results are valid only if this scaling law still holds in the unchartered regions of parameter space which we examine.

Our calculations show that a tokamak energized with an intense pulsed ion beam can achieve breakeven and the ion temperature necessary for ignition. For a small tokamak the size of Alcator C, about 1 MJ of beam energy is needed to achieve this ion temperature; for TFTR about 40 MJ. Our calculations show several specific advantages of heating with intense pulsed ion beams.

First, all of the energy is in the plasma at time $t=0$, so that by properly choosing beam and plasma parameters, this energy can be absorbed by the plasma in a confinement time or less. Conventional heating schemes, on the other hand, use very much lower power so that more injected power is

Manuscript submitted March 28, 1981.

lost from the plasma as it slowly heats up. Second, the beam current can exceed the net toroidal current, allowing for return current heating. This heating can be large during the initial heating when the plasma temperature is still low. Thus power absorbed by the plasma can be larger than the collisional power lost by the beam. Third, there is no limiting plasma density, above which intense pulsed ion beams cannot be used. Fourth, in approaching breakeven, there are beam-plasma reactions as well as plasma-plasma reactions. Fifth, while most of the beam energy is deposited in electrons, its last bit of energy is deposited directly in the ions. Since the electrons are quite hot at this time, this leads to a quick boost in ion temperature, which in some cases can lead directly to ignition temperature.

Since a fixed profile code is necessary both to examine heating, and one injection scheme, we begin in Section II with the equations for the self-consistent beam and plasma response and show that they conserve total energy. Section III discusses injection into small-volume, full-density plasma via $E\times B$ drift across the magnetic field. Some preliminary experiments on perpendicular injection have propagated the beam across a field with almost 100% efficiency if the conditions in Ref. 1 are satisfied [5,6]. Nearly parallel injection should be easier because the electric fields required are smaller. Section IV discusses injection into a full-volume, low-density plasma. Section V discusses trapping with a pulsed stabilizing field or current. Section VI briefly reviews the stability of ion beams in plasmas. Section VII presents calculations of tokamak heating. Finally, Section VIII discusses small-scale experiments that can be done to test some of the concepts developed in this report. In addition to experiments on beam injection itself, there are also experiments one can do to study high-beta tokamaks.

II. THE EQUATIONS FOR BEAM AND PLASMA

In this section we write out the equations for the self-consistent response of the beam, plasma, and poloidal (θ) magnetic field, assuming that the beam has been injected into the plasma. The zero dimensional equations for the (z component of the) beam velocity V_z, electron temperature T_e, and ion temperature T_i are

$$n_b M_b \frac{dV_b}{dt} = - n_b M_b (V_b - V_e)\nu_b + n_b eE - n_b M_b V_b \nu_{bi} \tag{1}$$

$$\frac{3}{2} n_e \frac{dT_e}{dt} = n_b M_b \nu_b (V_b - V_e) V_b - E n_e e V e - n_e \nu_{eq}(T_e - T_i) - \frac{3}{2}\frac{n_e T_e}{\tau_e} + P_\alpha - P_r \tag{2}$$

$$\frac{3}{2} n_i \frac{\partial T_i}{\partial t} = n_e \nu_{eq}(T_e - T_i) + n_b M_b \nu_{bi} V_b^2 - \frac{3}{2}\frac{n_i T_i}{\tau_i} \tag{3}$$

where n_b, n_e, and n_i are beam, electron, and ion number density. Since n_e and n_i are at the center of the discharge, they are to be regarded as maximum, rather than average densities. Also, V_e is the electron streaming velocity in the z direction. The quantities τ_e and τ_i are the electron and ion energy confinement times. The electron confinement time is taken to have Alcator scaling

$$\tau_e = 1.5\times 10^{-18} n_e r_o^2, \tag{4}$$

where r_o is the radius of the plasma current channel. The numerical factor is taken to agree with recent PLT experiments. The ion confinement time is given by neoclassical scaling

$$\tau_i = \frac{r_o^2}{2K_{ci}} \tag{5}$$

where

$$K_{ci} = \frac{0.68}{1 + 0.36\nu_i^*} \cdot \frac{Z_{ef} n \rho_{i\theta}^2}{\tau_i}\left(\frac{r}{R}\right)^{1/2} + \frac{Z_{ef}\rho_i n}{\tau_i}\left(1 + 1.6\frac{r^2 B^2}{R^2 B_\theta^2}\right) \tag{6}$$

as given by Rutherford and Duchs [7]. Here

$$\tau_i(\text{sec}) = 2.09 \times 10^7 T_i^{3/2}(\text{eV})\mu^{1/2}/n\lambda \tag{7}$$

UNCLASSIFIED

and

$$\nu_i^* = Z_{ef} R^{3/2} B/\tau_i r^{1/2}\, B_\theta (T_i(\text{ergs})/M)^{1/2} \tag{8}$$

where the units for T are specified and all other units are Gaussian. The ratio of ion to proton mass is μ, and λ is the Coulomb logarithm. The collision frequencies are the beam electron slowing down, and electron-ion equilibration and beam-ion slowing down collision frequencies, given by

$$\nu_b = \begin{cases} 1.7 \times 10^{-4}\, n_e\, \lambda\, \dfrac{\mu_b^{1/2}}{E_b^{3/2}} (\text{eV}) \\ 1.6 \times 10^{-9}\, n_e\, \dfrac{\lambda}{\mu_b T_e^{3/2}} (\text{eV}), \end{cases} \tag{9}$$

whichever is smaller. Here E_b is the beam energy in electron volts. Also

$$\nu_{bi} = 9 \times 10^{-8} Z_{ef} n_e\, \lambda \left(\frac{1 + \dfrac{\mu_b}{\mu}}{\mu_b^{1/2} E_b^{3/2}} \right) (\text{eV}) \tag{10}$$

$$\nu_{eq} = 3 \times 10^{-9} Z_{ef} n_e\, \frac{\lambda}{\mu T_e^{3/2}} (\text{eV}). \tag{11}$$

The electric field is gotten from the z component of the electron momentum equation

$$E = -\frac{m\nu}{e} V_e - \frac{n_b M \nu_b}{n_e} (V_e - V_b), \tag{12}$$

where ν is electron-ion momentum exchange collision frequency. The quantities P_α and P_R are respectively the α particle heating of electrons (α particle energy is assumed deposited directly in the electrons) and radiation loss due to free bremsstrahlung from the center of the plasma. Generally this latter term is not important, but it can be important for high Z_{ef} and/or high density. We use

$$P_r = 1.6 \times 10^{-32} Z_{ef} n_e^2 T_e^{1/2} (\text{eV})\ \text{W/cm}^3. \tag{13}$$

The next thing to consider is the equation for the poloidal magnetic field. This is given by

$$\frac{\partial B_\theta}{\partial t} = -c\, \nabla \times E|_\theta = -c \frac{\partial E_z}{\partial r}. \tag{14}$$

Equation (14) is inconvenient to work with because it has a strong r dependence. For simplicity, we spatially average this equation in a way which conserves total energy. Taking the dot product of Eq. (14) with $B_\theta/4\pi$, we find

$$\frac{\partial}{\partial t} \frac{B_\theta^2}{8\pi} = -\frac{c}{4\pi} B_\theta \cdot \nabla \times E = -\nabla \frac{cE \times B_\theta i_\theta}{4\pi} - \underline{E} \cdot \underline{J}. \tag{15}$$

The first term on the right-hand side of Eq. (15) is the divergence of the electromagnetic energy flux; the second term denotes an energy exchange between electromagnetic fields and the fluid. The quantity J is the total current

$$J = n_b e V_b - n_e e V_e. \tag{16}$$

Assuming J is uniform from $r = 0$ to $r = r_o$ and is zero for $r_o < r < a$ where a is the liner radius, we find

$$\frac{d}{dt}\left(\frac{1}{2} + 2 \ln\left(\frac{a}{r_o} \right) \right) \frac{B_\theta^2}{8\pi} = -E(n_b e V_b - n_e e V_e) - \frac{crE_z B_\theta}{2} \Big|\, r = a,$$

where B_θ is the poloidal field at $r = r_o$. The $(crE_z B_\theta/2)| r = a$ term on the right-hand side is the power input and current drive from the external circuit. Here we assume that once the beam-plasma system in initialized, there is no external power input or drive. Thus the equation for B_θ is

$$\frac{d}{dt}\left(\frac{1}{2} + 2\ln\left(\frac{a}{r_o}\right)\right)\frac{B_\theta^2}{8\pi} = -E(n_b e V_b - n_e e V_e). \tag{17}$$

The electron drift velocity V_e is determined by Maxwell's equation $\underline{\nabla} \times \underline{B} = \frac{4\pi J}{c}$. It is

$$V_e = \frac{-cB_\theta}{2\pi r_o n_e e} + \frac{n_b}{n_e} V_b. \tag{18}$$

Equations (1), (2), (3), (12), (17), and (18) form a set of equations for the time dependence of the beam-plasma-poloidal field system. The system conserves energy, since

$$\frac{d}{dt}\xi^t = -\frac{3}{2}\left(\frac{n_e T_e}{\tau_e} + \frac{n_i T_i}{\tau_i}\right) + P_\alpha - P_r, \tag{19}$$

where ξ^t is the total thermal energy of the electrons plus ions, plus the poloidal field energy, plus the beam energy. We emphasize once more that in this report, we assume that after the beam is shot in, there is no external power or current drive input either from the external circuit or from any other source. Thus, unless ignition is attained, the plasma will at first heat up and then decay, that is, it will be transient in nature.

III. INJECTION INTO A FULL-DENSITY, LOW-VOLUME PLASMA

The first injection scheme we discuss is the injection of the ion beam into a spatially localized plasma in the center of the tokamak. This localized plasma is assumed to carry a large current, which may be either the final required current or somewhat less. The beam (which is charge neutralized with electrons from the cathode) propagates across the vacuum region by setting up a polarization drift [1,8,9]. Then the $E \times B$ drift velocity of the beam will be nearly equal to its original velocity as long as $(\omega_{pb}/\Omega_{cb})^2 >> 1$, where ω_{pb} and Ω_{cb} are respectively the plasma and cyclotron frequency of the beam ions. One great potential advantage of this injection scheme is that a beam-plasma equilibrium exists which is very close to the configuration which exists at injection.

One way to accomplish this injection is to place the diode in a long guide tube which joins the sidewall of the tokamak. There are at least three options, as shown in Fig. 1. First, the guide tube may be unmagnetized; second, the guide field may curve away just before the entrance to the tokamak; and third, the guide field can curve and merge with the tokamak field like a bundle diverter. Alternately the diode may be placed in the tokamak (either directly, or in a separate chamber) in the shadow of the limiter. In either case, the beam moves across the vacuum and strikes the target plasma. When it does so, it propagates nearly parallel to the field. This target plasma has high electrical conductivity so that it will short out the polarization electric field. The beam will then be trapped in the plasma, which will serve as a channel to guide the beam around the torus. Since the beam does not carry any net electrical current on injection, the target plasma must carry the necessary current before the beam is shot in. Once the beam is trapped, the density is built up by gas puffing.

There are three principal limitations on this method. First, the distance across B that the beam can propagate is limited by electron expansion along the field lines [1] to roughly $d < (\omega_{pb}/\Omega_{cb})b$, where b is the beam radius. For our scheme, this does not appear to be a significant limitation. Second, the polarization electric field does not somehow short circuit (and thereby stop the beam) between the diode and target plasma. For instance if the front end of the beam meets the curved field while the rear is in electrical contact with the cathode, the polarization field might short circuit on the

UNCLASSIFIED

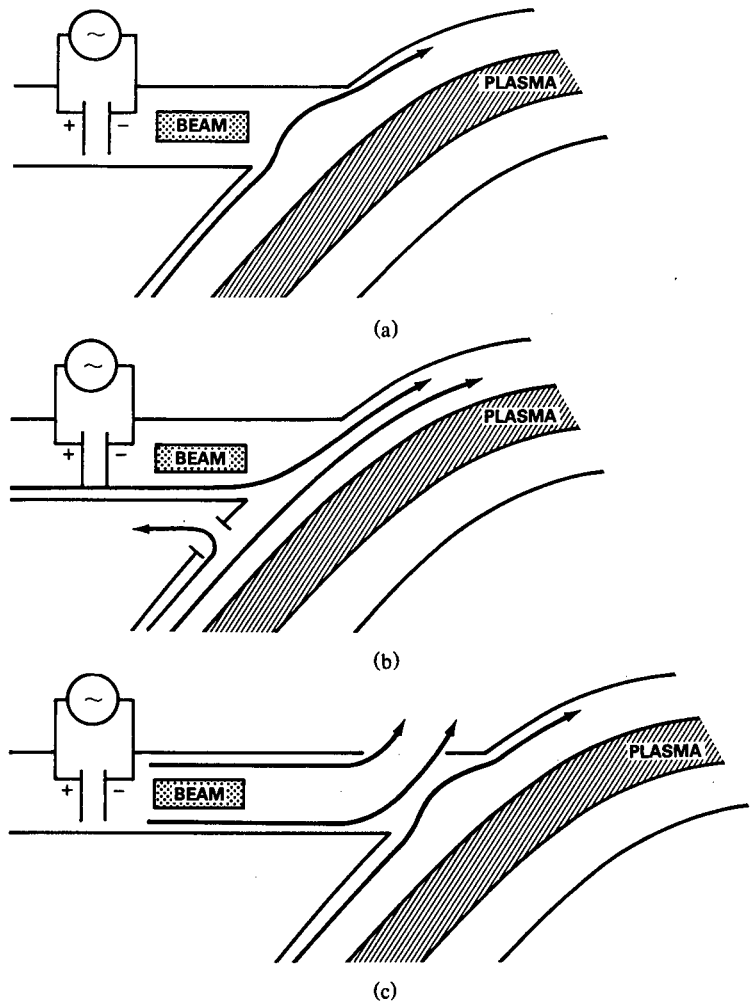

Fig. 1 — Injection with an (a) unmagnetized, (b) magnetized, and (c) mostly magnetized guide tube

cathode [9,10]. Also the magnetic field lines in the tokamak are at different potentials when the beam passes through, so they cannot intersect a conductor. Third, the voltage drop across the beam, due to the polarization field, is $bV_bB\sin\theta$, where θ is the angle between the field and beam velocity. Any injection experiment must account for this. Finally, we point out that several experiments on this injection scheme have been attempted [5,6,11,12] and at least two [5,6] have confirmed the theory in Ref. 1, and one [12] seems to work even better than predicted.

The experiments in Refs. 5 and 6 both used beams with $\omega_{pd}^2/\Omega_{cb}^2 \sim 300$ and a configuration like that in Fig. 1(a) with no parallel guide field, but with the beam perpendicular to the magnetic field. In each case efficient propagation was observed. In Ref. 5, the maximum distance of propagation was limited to $(\omega_{pb}/\Omega_{cb})b$ as predicted, and in Ref. 6, the polarization field which propagates the beam was measured. The experiments of Ref. 11 used a configuration like that in Fig. 1(b) but only up to the first bend [13]. They found that a 500 kV beam with $\omega_{pb}^2/\Omega_{cb}^3 = 30$ propagates across the bend in the field with more than 50% efficiency. However it was not clear whether the polarization drift or some other space charge effect was responsible for the propagation.

The University of California at Irvine group has also done other experiments to test what beam density is needed to accomplish cross field injection by setting up a polarization field. They find that for $\omega_{pb}^2/\Omega_{cb}^2 \lesssim 100$, the electric field is dominated by the formation of a virtual anode at the head of the

beam [14], whereas for $\omega_{pb}^2/\Omega_{cb}^2 \gtrsim 300$, the propagation is dominated by the polarization field. If beams with such high density are needed, one option is to produce them directly as in Ref. 6. Another option is to produce the beam at lower density, but using a diode with a rising voltage pulse. The beam would then ballistically bunch in the guide tube and would enter the tokamak at a much higher density than what it was produced at.

Let us now investigate the beam-plasma equilibrium which is likely to be produced upon injection. We assume first that the target plasma carries either the total tokamak current or somewhat less (half the final current maybe) and is in an MHD equilibrium. To be specific, we assume the target plasma has no pressure so its equilibrium is force free. Also we assume that the relatively low-energy electrons carried by the beam immediately mix with the plasma electrons to form a single electron fluid.

The key to the new beam-plasma equilibrium, and also the fact which greatly simplifies it, is that current is frozen into the fluid on the beam injection time scale. To calculate the new equilibrium one then first calculates the beam orbits in the existing fields. Secondly one calculates the response of the system to the fact that the current is now carried partly by the beam and partly by plasma. As we will see, if B (toroidal) $>>$ B (poloidal), the system hardly responds at all to this abrupt change.

We assume that initially,

$$R\,A_\phi = B_0 r_0 R_0 \left[1 - \ln\left(1 + \frac{(R - R_0)^2 + Z^2}{R_0^2}\right)\right], \tag{20}$$

where we have chosen a cylindrical coordinate system R, ϕ, z, where ϕ is the direction of toroidal symmetry. The flux surfaces are circular, and the maximum poloidal field at $r_0 = [(R - R_0)^2 + z^2]^{1/2}$ is given by B_0 correct to order r_0/R_0. The ion orbits are constrained by

$$P_\theta = M\,R\,V_\phi + \frac{e\,A_\phi}{c} = \text{constant}. \tag{21}$$

The singular points on the ion orbit are given by

$$R - R_0 = \frac{e\,B_0 R_0 r_0}{M\,V_0 c} \pm \left[\left(\frac{e\,B_0 R_0 r_0}{M\,V_0 c}\right)^2 - r_0^2\right]^{1/2}, \quad Z = 0. \tag{22}$$

If $R - R_0$ is complex, there are no singular points, and therefore, no confined ion orbits. If $R - R_0$ is real, both roots are positive, so that the orbits are displaced outward from the flux surface. The inner singular point is an x point and the outer one is an 0 point so that the drift surfaces are as shown in Fig. 2. The condition for the distance between the two singular points to be larger than r_0 is

$$\frac{e\,B_0 R_0}{M\,V_0 c} > \frac{\sqrt{5}}{2}. \tag{23}$$

We will take Eq. 23 as the condition for a large region of confined ion orbits.

We now consider the response of the plasma to the presence of the beam. To simplify the physics, we replace the torus with an equivalent cylinder with coordinates r, ϕ, Z, where $R_0\phi = Z$. Since the plasma is force free, $J_\theta B_Z = (J_Z - J_b) B_\theta$, where J_b is the beam current, assumed to be in the Z direction and J_Z is the total current. Thus if $B_Z >> B_\theta$, a new plasma equilibrium can easily form by small adjustments in the poloidal currents.

To conclude we show that these adjustments in poloidal currents have a negligible effect on the beam. The change in toroidal field produces a poloidal electric field

$$E_\theta = -\frac{1}{rc}\int_0^r r\,\frac{\partial B_Z}{\partial t}\,dr.$$

UNCLASSIFIED

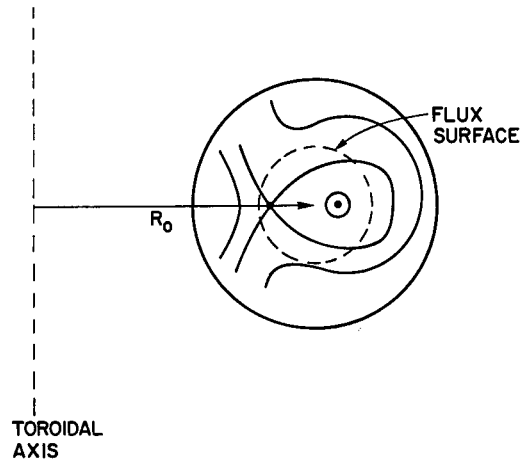

Fig. 2 — Ion drift orbits in the poloidal plane

This electric field gives rise to a radial $E \times B$ drift of the beam, and the final radial displacement is

$$\Delta r \sim r \frac{\Delta B_Z}{B_Z}. \tag{24}$$

However since $\Delta Bz << Bz$, the beam displacement is very small.

To summarize, injecting an intense pulsed ion beam into a full-density, low-volume plasma via the polarization drift looks very appealing. The concept itself at least cleared some of the preliminary experimental tests, and once the beam is in the plasma, the beam-plasma system finds its own new equilibrium very easily, without any help from an external circuit.

Several methods could produce the localized plasma, including electron cyclotron breakdown [15] and vaporization of a DT pellet by a high-power laser. Also one could compress either the toroidal [16] or vertical field [17] to draw the plasma away from the wall, shoot in the beam, and let the plasma then expand to its full size again. Finally, a variety of similar schemes use moving limiters or suddenly decreased currents in divertor coils.

IV. BEAM INJECTION INTO A FULL-VOLUME, LOW-DENSITY PLASMA

The second injection scheme we consider involves beam trapping by current generation. There are two issues here. First, can the beam generate enough current to stop its own downward drift, and second, can it generate enough current to form a beam-plasma equilibrium? The answer to the first question appears to be yes, particularly since by adjusting the vertical field, the current needed to stop the beam can be made quite small. The answer to the second question appears to be no. Thus once the beam is trapped, the current almost certainly will have continued to be built up by an external source until the desired equilibrium is formed.

We consider an initial full-volume, low-density plasma that carries no current and has low temperature (in our calculations we assume initial temperatures of $T_e = 10$ eV, $T_i = 5$ eV). The beam is injected nearly parallel to the main toroidal field through an opening at the top or bottom of the torus. The density is low so that the return current velocity is high, allowing current-driven instabilities to be excited. Because of the presence of the plasma, the beam is charged and current neutralized so the ions feel no self forces, but only the forces from the externally applied toroidal and vertical fields. Hence each ion orbit goes principally around the torus, but has a small vertical drift

$$V_D = V_b \left(\frac{B_{zo}}{B} + \frac{V_b}{R_o \Omega} \right)$$

where R_o is the major radius at injection and Ω is the ion cyclotron frequency in the toroidal field. We assume the drift is downward if $B_{zo} = 0$.

To prevent the beam from just drifting in the top and out the bottom, the return current must decay sufficiently just as the beam passes through the center of the toroidal chamber, or on a time of order $\tau = a/V_D$. A similar method of drift injection has also been suggested for electron beams [18,19]. If the maximum poloidal field is $B_{\theta o}$, one can show either by calculating the drift orbits or by utilizing the constancy of canonical angular momentum in the toroidal direction, that the ion orbits are confined if $\Omega_{\theta o} R_o/(V + \Omega_{zo} R) > 1$ where $\Omega_{\theta o}$ and Ω_{zo} are ion cyclotron frequencies in the fields $B_{\theta o}$ and B_{zo} respectively. For Versator, with a 300 keV proton beam with the drift velocity 80% canceled out by B_{zo}, we find that the condition for closed ion orbits is $B_{\theta o} > 300$ G. For Alcator C, a 2 MeV tritium beam with the drift velocity 80% canceled by a vertical field, requires a $B_{\theta o}$ of about 900 G. Thus a condition for beam trapping is that the fields $B_{\theta o}$ reach at least these appropriate values.

The decay time of the return current is determined in part by the background plasma density. The drift velocity is determined by the vertical field B_{zo}. These two quantities can then be adjusted to provide optimum conditions for beam trapping.

We now discuss the model for the day of the return current. Because the electron drift velocity is so large, an ion acoustic instability is excited. This appears to be the only instability which can act on a time scale sufficiently fast to stop the beam.

The current-driven ion acoustic instability has been studied in many different laboratory experiments, and also in many different particle in cell simulations. The qualitative features of many of these experiments and simulations seem consistent with ion acoustic turbulence with $k\lambda_D \sim 0.5$ being excited to a fluctuating rms potential of about $0.03 < e\phi/T_e < 0.15$. The quasi-linear theory of this instability [20] predicts an anomalous electron-ion collision frequency of

$$\nu_{an} = \frac{\sqrt{2\pi}}{2} (k\lambda_D)\omega_{pe} \left(\frac{e\phi}{T_e} \,|\, rms \right)^2 \sim \frac{\omega_{pe}}{2} \left(\frac{e\phi}{T_e} \,|\, rms \right)^2 . \tag{25}$$

In our calculations we assume that $\nu_{an} = \omega_{pe}/1000$ if the plasma is ion acoustic unstable. Our procedure then is to add ν_{an} to ν in Eq. (12) whenever ion-acoustic waves are linearly unstable.

The total plasma heating E·J is then greatly enhanced by the anomalous resistance. As long as the ion acoustic waves are at a steady state, one can show [21] that $\dot{T}_e/\dot{T}_i \approx V_e/\sqrt{T_e/M} >> 1$. However the small amount of ion heating plays a crucial role in the dynamics because the condition for instability depends on T_i/T_e. If we neglect the anomalous ion heating, we find that much larger currents can be generated and the trapping can be greatly improved.

It remains to determine the instability threshold for the ion acoustic waves. This is actually quite complicated because the ion Landau damping rate depends sensitively on the ion distribution function. We assume that the ions form a nonthermal tail on the distribution function whose temperature is roughly the electron temperature. Assuming the ion heating goes into producing this nonthermal tail, the ratio of the tail to thermal ion density is roughly T_i/T_e. If the ion Landau damping comes from this tail, we find

$$V_{CT} \approx \sqrt{\frac{T_e}{m}} \left(\sqrt{\frac{m}{M}} + \frac{T_i}{T_e} \exp - \frac{1}{2} \right) . \tag{26}$$

UNCLASSIFIED

For this model, our calculations of ion temperature are unchanged; the nonthermal tail feature only changes the critical electron drift velocity for instability. We have also examined the effect of Maxwellian ions and a collision frequency of $10^{-2}\ \omega_{pe}$. The former choice has only a small effect; the latter greatly affects the time scale for current generation, but not the final currents or temperatures.

Calculations were done for Versator assuming a beam radius of 5 cm. The unshielded poloidal field is 2400 G. The poloidal field generated is shown as a function of density in Fig. 3. Notice that at minimum background density, nearly half of the beam current can be generated in the plasma. Also shown is the time at which the poloidal field reaches 300 G (the field needed to confine the beam). This time is a weakly increasing function of density. For Alcator C we have found that a 2 MeV, 1.2 MA beam generates 1400 kG for a background density of 3×10^{13}. Thus we calculate sufficient current can be generated to at least stop the beam.

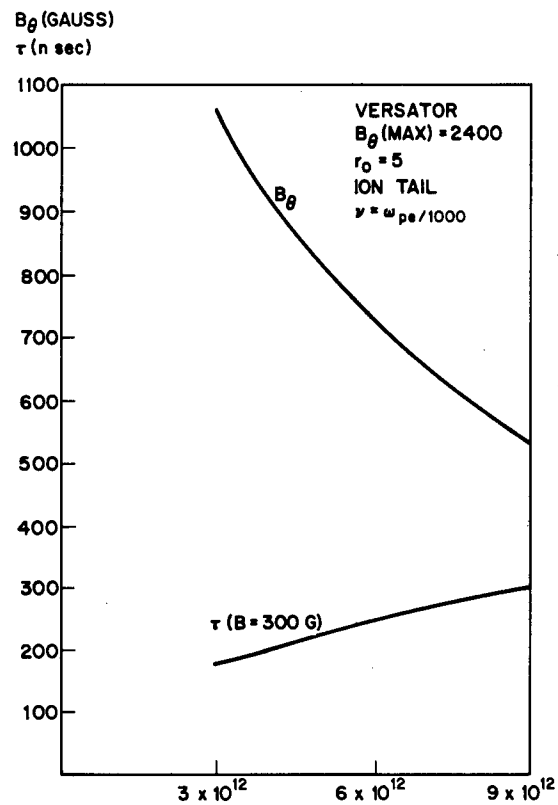

Fig. 3 — Current generation as a function of density in Versator for a 5-cm beam radius

We now turn to a discussion of the current generation experiment on Spac V done by Mohri et al. [19]. In his experiment, 500 kV, 3 cm radius electron beam was shot into a plasma with density $n = 5 \times 10^{13}$. The diode current was 80 kA, but because it was multiturn injection, the total current injected was about 450 kA. He found about 28 kA generated in about 500 nsec, whereas we calculate about 56 kA generated in 500 nsec. The fact that the time scales are comparable supports our hypothesis that the ion acoustic instability is responsible for the anomalous resistivity. However our calculations show somewhat more current generated than what was measured.

If the beam generates enough current to trap itself but not enough to form the equilibrium, the remaining current must be generated externally. One advantage to using a low-density background

plasma is that the current can most likely be pulsed on rapidly [22,23]. This experiment was not successful as far as turbulent heating is concerned, but it did show that the current could be set up on a microsecond time scale for a sufficiently low-density background plasma. For instance with $a = 10$ cm and $R = 60$ cm and a background density of 2×10^{12} cm^{-3}, a current of 5×10^4 A can be generated in 1 μsec with no skin effect. As the density increases, the skin effect becomes more pronounced until at 5×10^{13} cm^{-3} there is very little field penetration [22]. The voltages, powers, and energies involved in pulsing the current are very small compared to those involved in pulsing the beam. Also, it was shown that once the current is pulsed on, a normal tokamak discharge can be produced with $n \sim 10^{13}$ cm^{-3} and $T_e \sim 0.5$ kV, which exists in a steady state for about 10 μsec and whose lifetime is limited by the external circuit [23]. Thus, if the beam cannot itself generate enough current to form an equilibrium, it appears that because the density is quite low, the equilibrium can be produced very rapidly by an external circuit.

V. BEAM TRAPPING WITH A PULSED STABILIZING OR POLOIDAL FIELD

The third injection scheme involves injection into a full volume, charge and current neutralizing plasma which carries no current. The basic injection process is the same as in Section IV. The ion beam comes in on the top. Because there is charge and current neutrality, the beam drifts downward, influenced only by the externally imposed fields. Assume now that the density of the background plasma is high, so there is no anomalous resistivity. Imagine that in addition to the toroidal field, there is a uniform vertical field which cancels out 90% of the downward centrifugal drift. For instance in PLT, with a 40 kG toroidal field, a 1 MeV proton beam and a 1 kG vertical field, the downward drift velocity in the combined toroidal and vertical fields would be about 3.5×10^6 cm/sec, so that the time to drift from the injector to the center of the toroidal vacuum chamber would be something over 10 μsec. As the beam approaches the center, a stabilizing field would be pulsed on in a time of order of this 10 μsec. For instance this stabilizing field might be a betatron field [18].

Thus extra coils are needed in the toroidal liner, coils which can pulse a field from say $B_z = 0.9\, B_{zo}$ to the betatron field in perhaps 10 μsec. This then will stabilize the drift near the center of the toroidal chamber and produce an equilibrium for the beams. Since this is a very small change in vertical field, there is very little compression of the background plasma; after an initial slight compression, the background plasma will undoubtedly relax back and contact the walls. However the plasma is not in equilibrium since its current is opposite to the beam current. Since the background plasma density is high, the full equilibrium can only be built up slowly, probably on a millisecond time scale. Therefore this injection scheme can be viable only if the beam-plasma system can exist without equilibrium, say in some complex plasma flow pattern, for these long times.

VI. REVIEW OF STABILITY OF INTENSE BEAMS IN PLASMAS

The equilibrium for the beam plasma system is simpler than those worked out previously [24] because the plasma currents (as discussed in Sec. III) play an important role in forming the equilibrium. We now turn to the question of the stability of the beam plasma system [25-30]. One useful result derived by Lovelace [25] for a large aspect ratio torus is that if the tokamak plasma has no equilibrium current or pressure, the MHD stability of the beam plasma system follows from the MHD stability of the plasma itself, if one makes the replacement $p \rightarrow (1/2) n_b M V_b^2$. Thus one has the Kruskal-Shafranov stability condition. Also one has a simple analog to the Suydam stability condition which is

$$\frac{1}{4}\frac{d\ \ln q}{d\ \ln r} + r\frac{d}{dr}\beta_t - \frac{r^2}{R^2 q^2}\beta_t > 0, \tag{27}$$

where $\beta_t = 4\pi n_b M V_b^2 / B_z^2$ and $q = rB_z(r)/RB_\theta(r)$. Lovelace also finds a sufficient stability condition for kink modes with $m = 1$, $0 < n^2 << (R/a)^2$ to be

UNCLASSIFIED

$$\frac{d}{dr}\beta_t + \frac{2r}{R^2}\left(1 - \frac{1}{q^2}\right) > 0. \tag{28}$$

Another possible MHD instability is the ballooning mode. If Lovelace's result, $p \rightarrow (1/2)n_b MV_b^2$ holds in a torus, as well as a straight cylinder, ballooning modes can be driven by the beam energy density, just as they are driven by pressure in ideal MHD. This could be a significant problem because the beam energies we deal with are not that small compared to the magnetic energy. In our Versator example, the local β_t is about 15% and the average β_t is about 4% if $B = 13$ kG. For Alcator C with $V_b = 5$ MeV, I = 1.5 MA, the local β_t is about 10% while the average β is about 2.5%. In this respect it is useful to know that conventional tokamak plasma equilibria, which are stable to low m number ballooning modes, can be found [31] and which have an average β_t of 12%. Thus it seems that the beam plasma systems which we have considered may well be stable to ballooning modes. Also stable tokamak plasmas with average β of 2.5% have been produced experimentally.

Let us now discuss briefly a relevant experiment [32]. Intense electron beams have been produced in a controlled manner in Ormak by lowering the density to produce runaway discharges. The energy of the beam electron is several MeV, the total current is about 10^5 A, and the confined beam energy is more than 2 kJ. These beams are stably confined in Ormak for 35 msec or longer. The actual decay time is about 100 msec, but there is a series of steps in a current decrease, which shortens the time to 35 msec. These steps presumably result from some instability. Thus in Ormak, an intense relativistic electron beam can be confined for times relevant to the scheme considered here.

VII. CALCULATIONS OF THE DYNAMICS OF TOKAMAK PLASMAS

In this section we solve Eqs. (1), (2), (3), (12), (17), and (18) numerically for tokamaks ranging from small research tokamaks to large reactors. In all cases we take $r_0 B/RB_z = q \geqslant 1$. We first consider Versator, a small research tokamak with $r_0 = 7.5$ cm, $a = 15$ cm, $R = 45$ cm, and $B = 10$ kG. A beam with voltage and current of 3×10^5 V and 6×10^4 A is shot in, and the total plasma current is taken as equal to the 60 kA beam current. Assuming the pulse duration is the time for a beam ion to go around the torus, the beam time and energy are $\tau = 3 \times 10^{-7}$ sec and $E = 6 \times 10^3$ J. At $t = 0$, the electron temperature is 100 eV and the ion temperature is 50 eV. Figure 4(a) shows the time dependence of T_e, T_i, I, and $V_b/V_b(t = 0)$ (I is the total current) for a proton beam shot into a hydrogen plasma with a density 2×10^{13}. Even with such a modest energy beam, there is a large amount of electron and ion heating. Figure 4(b) shows the dependence of maximum electron temperature, maximum ion temperature, and lifetime on initial plasma density. The advantage of higher density is apparent.

Next we have performed a series of calculations for PLT, with $r_0 = 20$ cm, $a = 40$ cm, and $R = 140$ cm. We consider a proton beam with $V = 2.1$ MeV, $I = 500$ A (440 kJ) injected into a hydrogen plasma in a magnetic field of 40 kG. The initial beam current is the total current and $T_e(0) = 1$ keV and $T_i(0) = 500$ eV. In Fig. 5(a) is shown the time dependence of total current, electron and ion temperature, and relative beam velocity as a function of time for plasma densities of 10^{14}. The current decay time is much longer than the beam decay time since the plasma rapidly heats up, decreasing the resistivity so that the current remains frozen in for a long time. Note that even though the beam transmits forward momentum to the electrons they end up going backward. The reason is the inductance of the system. When the electrons try to accelerate forward, an inductive electric field builds up and drives them back. Figure 5(b) shows the maximum electron and ion temperature, discharge lifetime, and the Q's for a tritium beam shot into a DT plasma as a function of density.

Here Q is defined as the fusion energy, from both beam plasma and plasma-plasma reactions, divided by the initial beam energy plus the initial poloidal field energy plus the initial plasma energy. The α particle energy is assumed to be deposited directly in the electrons, and the reaction rates are those given in the NRL plasma formulary. Notice that temperatures maximize at a particular density.

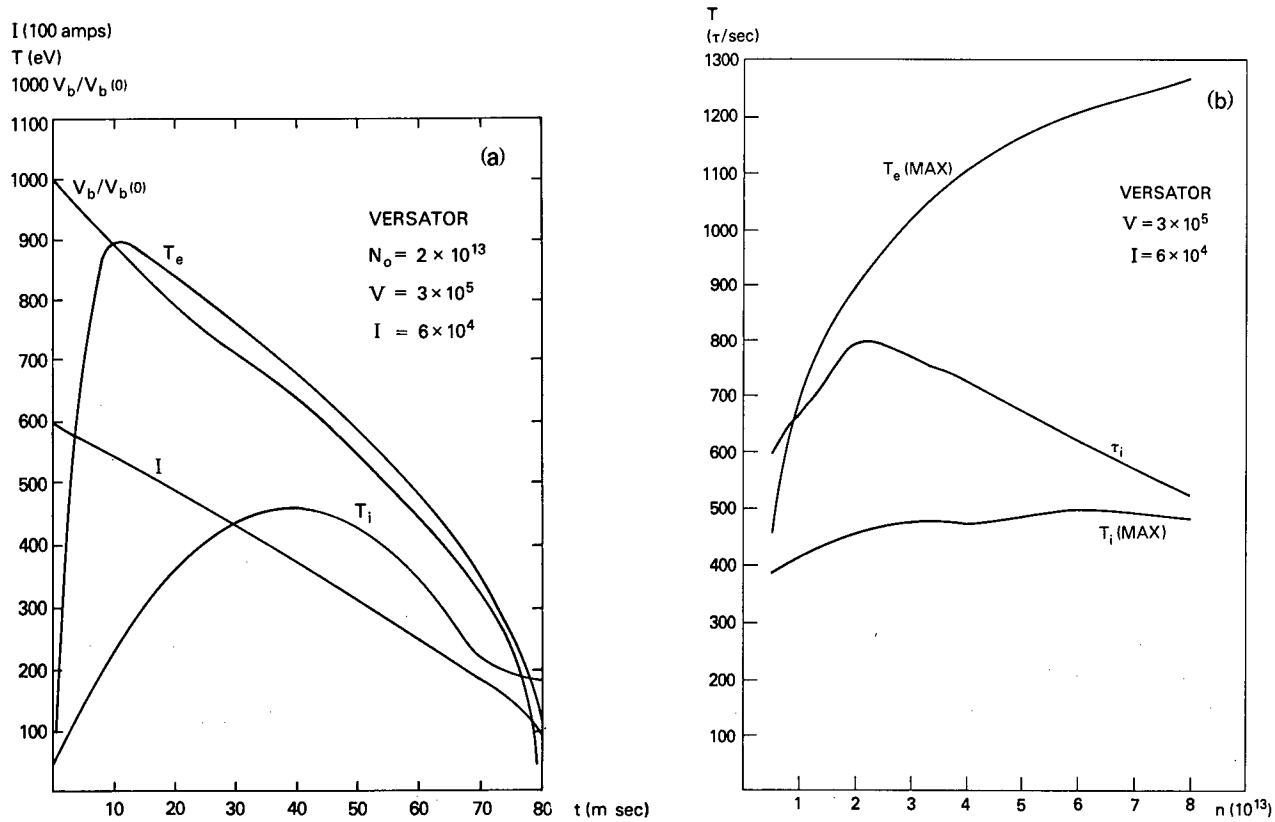

Fig. 4 — (a) The time dependence of T_e, T_i, current and relative beam velocity for Versator; (b) maximum electron and ion temperature and plasma lifetime as a function of density

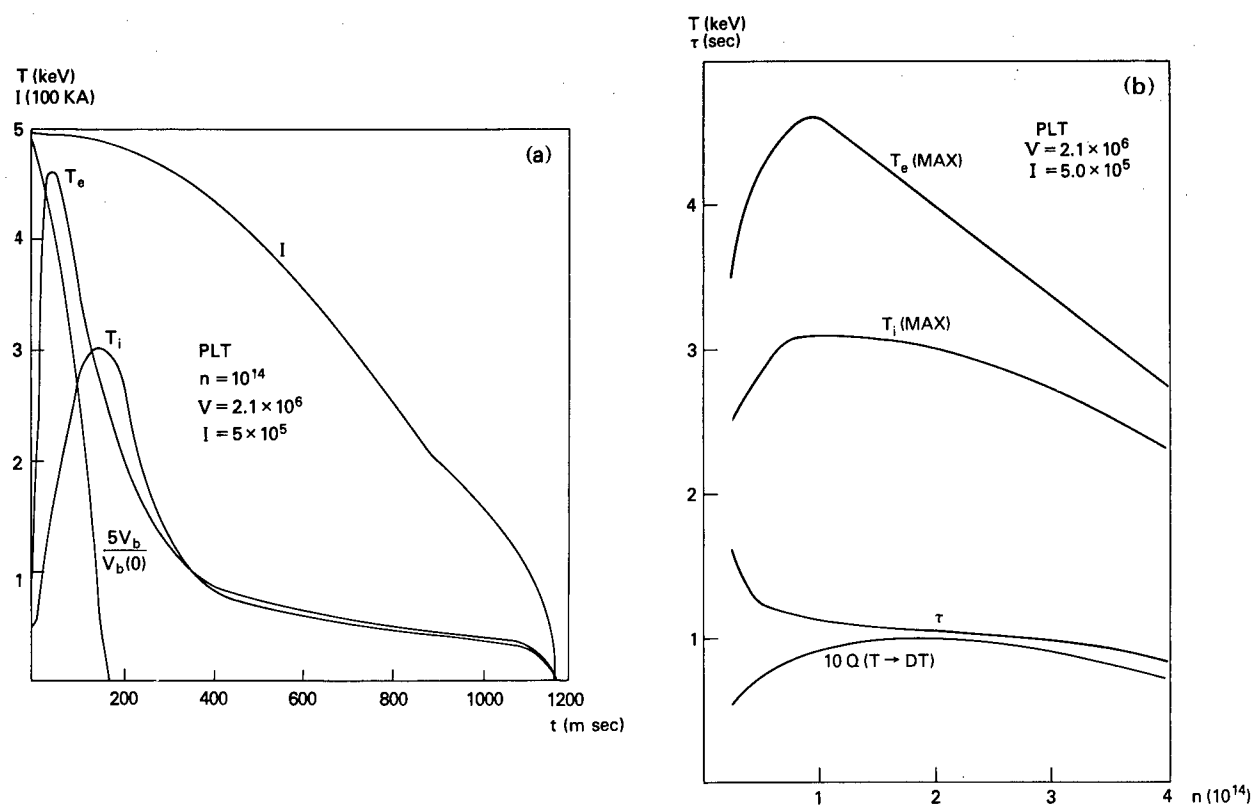

Fig. 5 — (a) Time dependence of T_e, T_i, current and relative beam velocity for PLT; (b) maximum electron and ion temperature, plasma lifetime, and Q as a function of density

UNCLASSIFIED

This results from the competition between the electron energy confinement time increasing with density, and the larger number of particles sharing the beam energy.

In the remainder of this section, we examine only thermonuclear plasmas. Our first study is for Alcator C, with $r = 10$ cm, $a = 20$ cm, and $R = 60$ cm. We examine whether $Q \sim 1$ can be achieved without pushing either the beam or the tokamak particularly hard. We examine plasma densities between 10^{14} and 10^{15} and magnetic fields between 60 kG $< B <$ 90 kG. These seem to be rather routine operating parameters for Alcator C. The total current is chosen to ensure that $q = 1$, that is $I = 6 \times 10^5$ (B/75 kG) A and the voltage is 2.1 MeV. The reactor Q is greatly enhanced when we can use a beam current larger than the total current, so that there is some current cancellation initially.

First, we have found that Q is maximized for a tritium beam shot into a plasma which is one quarter tritium and three quarters deuterium. Figure 6 is a plot of Q as a function of density for three different amounts of current cancellation. In the bottom curve, the initial beam current is the total current; in the middle curve, the initial beam current is 1.5 times the total current; and in the top curve it is double. For the top curve, where $B = 75$ kG, the initial beam energy is 780 kJ. Here Q depends very weakly on B but depends strongly on plasma density and net *beam* current.

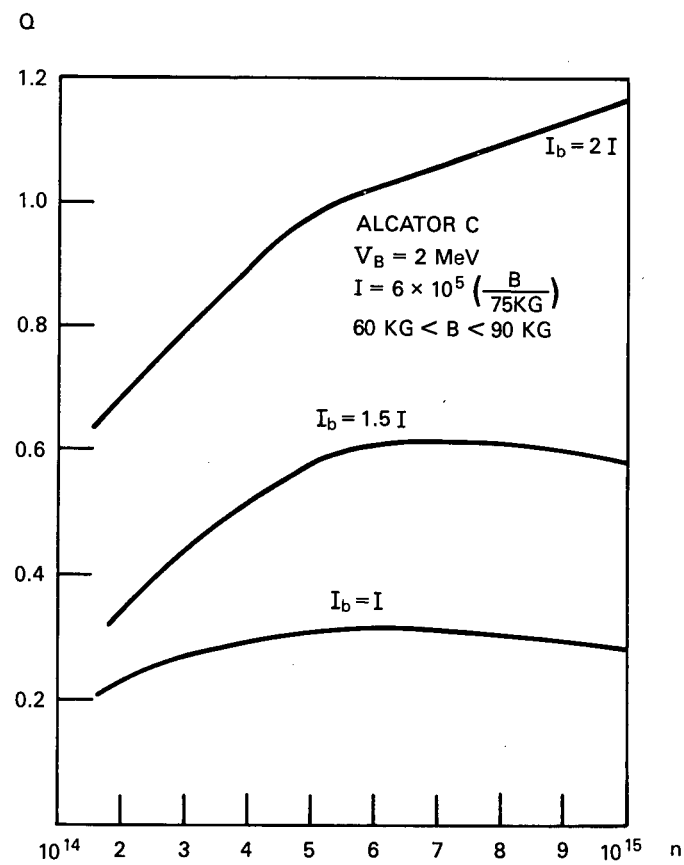

Fig. 6 — Q as a function of density and beam current to total current for Alcator C

A plasma having $Q \sim 1$, while not a pure fusion reactor, is of interest as a fission fusion hybrid [33]. It may be that something like Alcator C could be used to study this process on a small scale. It is particularly interesting that in this case, neither the beam nor the tokamak is being pushed particularly hard, so there is room to scale up both if for some reason our calculations are overly optimistic.

We next examined whether a thermonuclear ion temperature can be achieved. For Alcator C, we find that an ion temperature of 10 keV can be achieved with no current cancellation if $n = 10^{15}$, $B =$ 160 kG, and the beam parameters are $V = 5$ MeV, $I = 1.5$ MA (beam energy of 1.5 MJ). The required field can be reduced by allowing for current cancellation. For instance we find that if $n = 10^{15}$, $B = 100$ kG, $I = 1$ MA, I (Beam) $= 2$ MA, and $V = 2.1$ MeV, an ion temperature above 10 keV can be obtained. For TFTR with $r = 50$ cm, $a = 100$ cm, $R = 250$ cm, $n = 2 \times 10^{14}$ or 4×10^{14}, $B = 50$ kG, and $I = 2.5$ MA, a 5 MeV beam having 7.5 MA can reach the ignition temperature. The main thing which allows for ignition is the enormous beam power. In each case the beam energy is deposited in the plasma in about 100 msec, implying a power of tens of megawatts for Alcator C and hundreds of megawatts for TFTR.

VIII. SUGGESTIONS FOR SMALL-SCALE EXPERIMENTS

Although the injection schemes discussed in Sections V to VII may be somewhat uncertain, it is very useful to know that they can be tested on small-scale experiments in either linear or toroidal geometry. Since cross field propagation has been [5,6], it remains to show that the beam could be trapped and guided by a target plasma. Thus the beam could be injected nearly parallel to the magnetic field into a cylindrical chamber which has a plasma localized in the center of it as shown in Fig. 7. According to the theory presented here, when the beam collides with this plasma, the polarization field should short circuit and the beam's cross field motion should stop. That is, the plasma should form a channel for the beam. A very interesting experiment then would be to measure, and attempt to optimize, the efficiency of beam propagation from the diode to a detector far down the second cylindrical chamber.

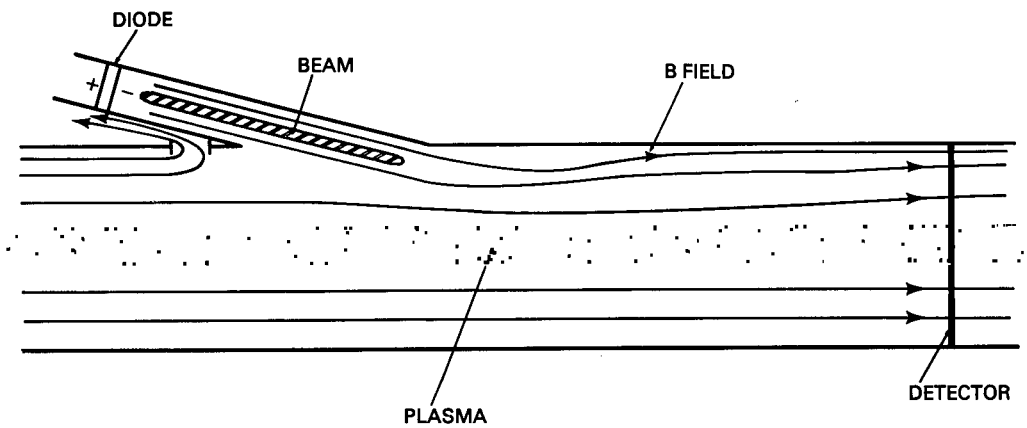

Fig. 7 — Schematic of an experiment to test injection into a full-density, low-volume plasma in linear geometry

An analogous experiment should also be possible on a small tokamak. The idea here would be to use as a limiter a pin inserted from the inside. This pin would define the largest radius flux surface with plasma. The beam would shot in from the outside. The diode could be either be in the vacuum region of the tokamak or in a guide tube outside. Once the beam hits the plasma it would be trapped by it as long as Eq. 23 is satisfied. Since the beam orbits are displaced outward from the flux surfaces, the beam orbits should miss the pin limiter on the inside and the beam plasma system should be in equilibrium. This is shown schematically in Fig. 8.

It is also possible to do experiments on current generation in linear geometry. Imagine a diode in an evacuated guide tube. The diode produces a charge-neutralized, intense pulsed ion beam which propagates down the guide tube. A short way down, the beam comes to a foil which separates the vacuum

UNCLASSIFIED

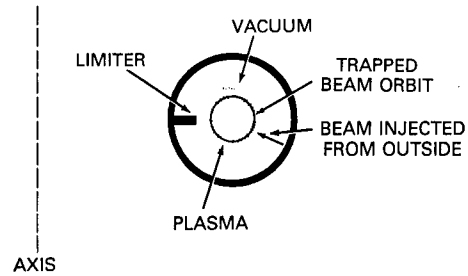

Fig. 8 — Schematic of an experimental to test beam injection into a small tokamak

from a low-density plasma. The decay of the return current in this plasma will measure how much current can be generated for various plasma densities. Such experiments would also demonstrate how long it takes to generate the current, what current-driven instabilities are excited, etc. This sort of experiment could give important information as to the background plasma density and vertical field needed to trap an ion beam in a toroidal chamber.

Both of the injection schemes which capitalize on the vertical drift of the ion beam rely on the fact that the beam is charge neutralized and that motion of the unconfined background plasma will not disrupt the beam. These concepts could also be tested on a simple experiment in linear geometry. Imagine a diode in an evacuated cylindrical tube in vacuum. A little way down the tube, a foil separates a region of gas or low-temperature plasma whose density can be varied. In the plasma region, the guide tube bends through for instance a 180° or 270° turn. There might or might not be a vertical field. A detector on the other side of the bend can test whether the intense beam follows the single particle drift orbit. Specifically this would determine the density requirement on the background plasma for efficiently propagating the beam along the curved field.

Finally let us note that injection of an ion beam into a tokamak gives an ideal way to study the β limitation of a tokamak. According to Lovelace [25], the energy density of the ion beam is interchangeable with plasma pressure in MHD stability theory. Since the injection time of the ion beam is small compared to any MHD instability, the plasma "pressure" and magnetic pressure can be continuously varied by changing the beam energy and toroidal field. Thus one can experimentally study a type of high-beta tokamak, and particularly, can examine the conditions for the onset of MHD ballooning instabilities.

IX. CONCLUSIONS

We find that tokamak heating and current maintenance with intense pulsed ion beams is an extremely promising area for future experimental and theoretical studies. Our calculations indicate that one shot from an ion beam at the initiation of the discharge can be sufficient to reach ignition temperature in either small-volume or large-volume tokamaks. Since ion beams are inherently very efficient, and they allow the elimination of the entire steady state ohmic heating circuit, they could most likely give rise to very economical reactor designs. Finally there are several interesting small-scale physics experiments that can be performed to test the concepts developed in this report.

X. ACKNOWLEDGMENTS

The authors wish to express their appreciation to Ed Ott, A. E. Robson, Chris Kapetanakos, and Jeff Golden for useful discussions. This work was supported by the U.S. Department of Energy.

XI. REFERENCES

1. E. Ott and W. Manheimer, Nucl. Fusion *17*, 5 (1977).

2. W. Manheimer and N. Winsor, Comm. Plas. Phys.

3. J. Golden, C. A. Kapetanakos, J. A. Pasour, and R. A. Mahaffey, I.E.E.E. Spectrum, to be published, also see J. P. Vandevender, Bull. Am. Phys. Soc. *25*, 969 (1980).

4. M. Murakami and J. P. Eubank, Phys. Today *32*, 25 (1979).

5. K. Kamada, C. Okada, T. Ikehata, H. Ishizuka, and S. Miyoshi, J. Phys. Soc. Jap. *46*, 1963 (1979).

6. H. Ishizuka and S. Robertson, Phys. Fluids, to be published, also U.C.I. Report 80-79 (1980) Irvin, Calif.

7. P. H. Rutherford and D. F. Duchs, Nucl. Fusion *17*, 565 (1977).

8. G. Schmidt, Physics of High Temperature Plasmas, p. 160, Academic Press, N. Y. 1966.

9. A. Komori, N. Sato, H. Sugai, and Y. Hatta, Plasma Phys. *19*, 283 (1977).

10. W. Peter and N. Rostoker, Phys. Fluids, to be published, also U.C.I. 79-69, Irvine, Calif.

11. J. Pasour, R. Mahaffey, J. Golden, and C. Kapetanakos, Bull. Am. Phys. Soc. *23*, 816 (1978).

12. E. J. Strait and J. C. Sprott, Nucl. Fusion *18*, 1595 (1978).

13. C. A. Kapetanakos, private communication.

14. F. Wessel and S. Robertson, Phys. Fluids, to be published, also U.C.I. 80-4, Irvine, Calif.

15. R. Gilgenbach et al., Nucl. Fusion, to be published.

16. V. E. Golant et al., Nucl. Fusion Suppl., p. 53 (1969).

17. K. Bol et al., Plasma Physics and Controlled Nuclear Fusion Research 1974, Vol. 1, p. 83 (IAEA 1975).

18. J. Benford, B. Echker and V. Bailey, Phys. Rev. Lett. *33*, 574 (1974).

19. A. Mohri, K. Narihara, T. Tsuzuki, Y. Kubota, Y. Tomita, K. Ikuta, and M. Masuzaki, Plasma Physics and Controlled Fusion Research 1978 (IAEA 1979).

20. M. Lampe, W. M. Manheimer, J. B. McBride, and J. H. Orens, Phys. Fluids *15*, 2356 (1972).

21. W. Manheimer, J. de Physique Colloque *C7*, 269 (1979).

22. R. D. Bengtson, K. W. Gentle, J. Jancarik, S. S. Medley, P. Nielsen, and P. Phillips, Phys. Fluids *18*, 710 (1975).

23. K. Gentle et al., Phys. Fluids *22*, 1558 (1979).

24. E. Ott and R. N. Sudan, Phys. Fluids *14*, 1226 (1971).

25. R. V. Lovelace, Phys. Fluids *19*, 723 (1976).

26. J. M. Finn, Phys. Fluids *22*, 1770 (1979).

UNCLASSIFIED

27. R. N. Sudan and M. N. Rosenbluth, Phys. Rev. Lett. *36*, 972 (1976).

28. R. N. Sudan and M. N. Rosenbluth, Phys. Fluids *22*, 282 (1979).

29. H. S. Uhm and R. C. Davidson, Phys. Fluids *22*, 718 (1979).

30. H. S. Uhm and R. C. Davidson, Phys. Fluids *23*, 348 (1980).

31. A. Sykes, J. A. Wesson, and S. J. Cox, Phys. Rev. Lett. *39*, 757 (1979).

32. H. Knoepfel, D. A. Spong, and S. J. Zweben, Phys. Fluids *20*, 511 (1977).

33. H. A. Bethe, Phys. Today *32*, 44 (1979).