NRL Report 7862

UNCLASSIFIED

A Program for Copying a Geodata Data Tape

MARILYN L. BLODGETT

Research Computation Center
Office of Director of Research

and

JAMES V. MASSINGILL

Propagation Branch
Acoustics Division

March 31, 1975

NAVAL RESEARCH LABORATORY
Washington, D.C.

Approved for public release; distribution unlimited.

SECURITY CLASSIFICATION OF THIS PAGE *(When Data Entered)*

UNCLASSIFIED

REPORT DOCUMENTATION PAGE

READ INSTRUCTIONS BEFORE COMPLETING FORM

1. REPORT NUMBER
NRL Report 7862

2. GOVT ACCESSION NO.

3. RECIPIENT'S CATALOG NUMBER

4. TITLE *(and Subtitle)*
A PROGRAM FOR COPYING A GEODATA DATA TAPE

5. TYPE OF REPORT & PERIOD COVERED
Final report on one phase of a continuing NRL Problem

6. PERFORMING ORG. REPORT NUMBER

7. AUTHOR*(s)*
Marilyn L. Blodgett and James V. Massingill

8. CONTRACT OR GRANT NUMBER*(s)*

9. PERFORMING ORGANIZATION NAME AND ADDRESS
Naval Research Laboratory
Washington, D.C. 20375

10. PROGRAM ELEMENT, PROJECT, TASK AREA & WORK UNIT NUMBERS
NRL Problem S01-47 ZF 52-552-01, Element 62755N, Arctic Submarine Lab. Proj. 4-0002 ARPA Order 1787

11. CONTROLLING OFFICE NAME AND ADDRESS
Naval Electronic Systems Command
Washington, D.C. 20360

12. REPORT DATE
March 31, 1975

13. NUMBER OF PAGES
27

14. MONITORING AGENCY NAME & ADDRESS*(if different from Controlling Office)*

15. SECURITY CLASS. *(of this report)*
Unclassified

15a. DECLASSIFICATION/DOWNGRADING SCHEDULE

16. DISTRIBUTION STATEMENT *(of this Report)*
Approved for public release; distribution unlimited.

17. DISTRIBUTION STATEMENT *(of the abstract entered in Block 20, if different from Report)*

18. SUPPLEMENTARY NOTES

19. KEY WORDS *(Continue on reverse side if necessary and identify by block number)*
Oceanography
Geophysics
Navigation
Bathymetry
Magnetics
Data tapes

20. ABSTRACT *(Continue on reverse side if necessary and identify by block number)*

A program has been written for reading a GEODATA tape and copying all or portions of the navigational, bathymetric, and magnetics data by listing, by punching cards, and/or by writing a new tape. The program can eliminate data not taken on certain dates or data which do not fall in a certain area of latitude and longitude. The program thus enables the scientist to exchange data in any convenient form while eliminating any classified information. The program was written in Fortran IV for use on the CDC 3800; however the program can be converted to run on other systems with little difficulty.

DD FORM 1 JAN 73 1473 EDITION OF 1 NOV 65 IS OBSOLETE
S/N 0102-014-6601

SECURITY CLASSIFICATION OF THIS PAGE *(When Data Entered)*

UNCLASSIFIED

CONTENTS

1.0 INTRODUCTION 1

2.0 PURPOSE 2

3.0 USAGE 2

4.0 METHOD OR ALGORITHM 4

5.0 FLOWCHART AND/OR SOURCE LANGUAGE LISTING 4

6.0 COMPARISON 4

7.0 TEST METHOD AND RESULTS 4

8.0 REMARKS 5

APPENDIX A — Sample Data Records 6

APPENDIX B — Deck Assembly for Program GEOREAD 9

APPENDIX C — Sample Output Listing 13

APPENDIX D1 — Flow Chart 18

APPENDIX D2 — Source Language Listing 20

UNCLASSIFIED

A PROGRAM FOR COPYING A GEODATA DATA TAPE

1.0 INTRODUCTION

1.1 Title

Program for copying a GEODATA data tape.

1.2 Identification Name

GEOREAD.

1.3 Classification Code

None.

1.4 NRL Research Computation Center Identification Number

None.

1.5 Entry Points

GEOREAD.

1.6 Programming Language

Language: 3600/3800 Fortran.
Routine Type: Program.
Operating System: Drum Scope 2.1.

1.7

1.7 Computer and Configuration

CDC 3800.

1.8 Contribution or Programmer

Marilyn L. Blodgett, Code 4223MB Research Computation Center, Office of Director of Research, written for Environmental Sciences Section, Acoustics Division.

1.9 Contributing Organization

NRL — Naval Research Laboratory, Washington, D.C. 20375.

NOTE: Manuscript submitted January 9, 1975.

1.10 Program Availability

If supplied with a magnetic tape, a copy of this program will be made available by the Environmental Sciences Section, Acoustics Division.

1.11 Verification

This program has been used and tested by the Environmental Sciences Section, Acoustics Division.

1.12 Date

September 1974.

2.0 PURPOSE

2.1 Description of the Routine

The program reads a data tape written by program GEODATA and copies all or portions of the data by listing, by punching cards and/or by writing a new tape. The input data tape, as well as the new tape, is written in the format recommended by the National Research Council of the National Academy of Sciences with one slight modification for the navigational data. There is one logical record (of 80 characters) for each data point. The different types of data (navigation, bathymetry, and magnetics) are separated by an end-of-file mark with a double end-of-file mark at the end of all the data. The cards will be punched in the same format as the tape.

The program has one input card which specifies which types of data should be copied and how they should be copied. If only certain portions of the data are to be copied, the card specifies the dates and times or the latitude and longitude values defining the desired area.

2.2 Problem Background

A program was needed to copy GEODATA tapes in order to exchange the data collected by oceanographic and geophysical cruises with other facilities. The use of the format recommended by the National Research Council of the National Academy of Sciences simplifies the reporting of such data.

3.0 USAGE

3.1 Calling Sequence or Operational Procedure

Not applicable.

UNCLASSIFIED

3.2 Arguments, Parameters, and/or Initial Conditions

Not Applicable.

3.3 Space Required (Decimal and Octal)

3.3.1 Unique Storage
2113 octal (587 decimal) locations exclusive of system library functions.

3.3.2 Common Blocks

None.

3.3.3 Temporary Storage.

None.

3.4 Messages and Instructions to the Operation

None.

3.5 Error Returns, Messages, and Codes

None.

3.6 Informative Messages to the User

None.

3.7 Input

The program has one input card which specifies which types of data (navigation, bathymetry, magnetics) are to be copied, how they are to be copied (list, punch, or write new tape), and the specific portions of data to be copied. Appendix B is a complete description of the input setup and shows samples of the format for the three types of data on the GEODATA data tape.

3.8 Output

The program will write a new tape on logical unit 12 in the same format as the GEODATA input tape (see Appendix A). It will also punch cards in the same format — one card for each logical record. There is also an option for listing all the required records on the standard printer (logical unit 61). Appendix C is a sample output listing.

3.9 Formats

Appendix B, which shows the program deck structure, describes the formats.

3.10 External Routines and Symbols

SKIPFILE,
XMODF.

3.11 Timing

The time required depends on the number of records to be read and copied.

3.12 Accuracy

Not applicable.

3.13 Caution to User

None.

3.14 Program Deck Structure

See Appendix B.

3.15 References — Literature

"Formats for Marine Geophysical Data Exchange," National Academy of Sciences, June 1972.

M.L. Blodgett and J.V. Massingill, "A Program for Storing Oceanographic Data on Magnetic Tape," NRL Report 7861, March 1975.

4.0 METHOD OR ALGORITHM

Not applicable.

5.0 FLOW CHART AND/OR SOURCE LANGUAGE LISTING

Flow chart and listing are given in Appendix D.

6.0 COMPARISON

There are no other known programs available for comparison.

7.0 TEST METHOD AND RESULTS

A sample of the listing for all three types of data are given in Appendix C. Samples

UNCLASSIFIED

of the data records written on the new tape of punched on cards are seen in Appendix A.

8.0 REMARKS

None.

Appendix A

SAMPLE DATA RECORDS

NAVIGATION

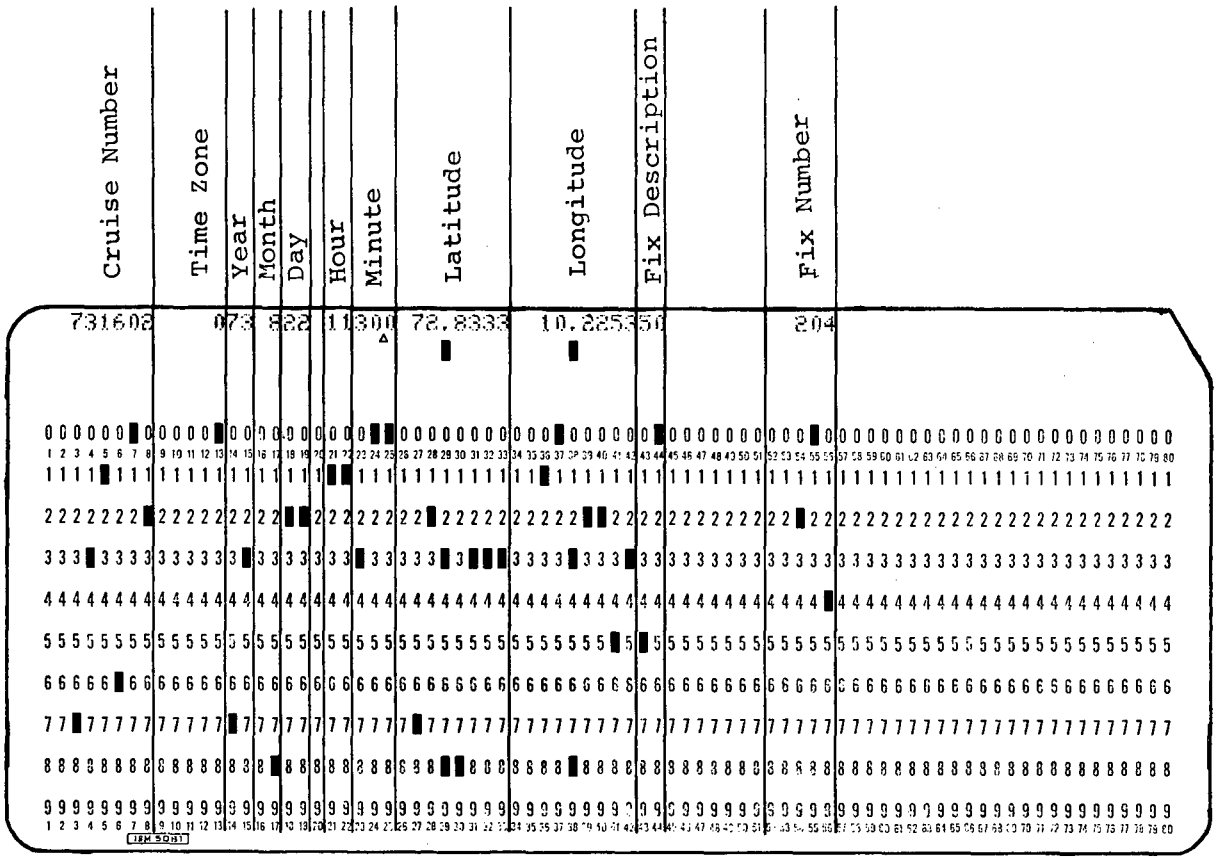

[Δ]Implies a decimal point.

UNCLASSIFIED

BATHYMETRY

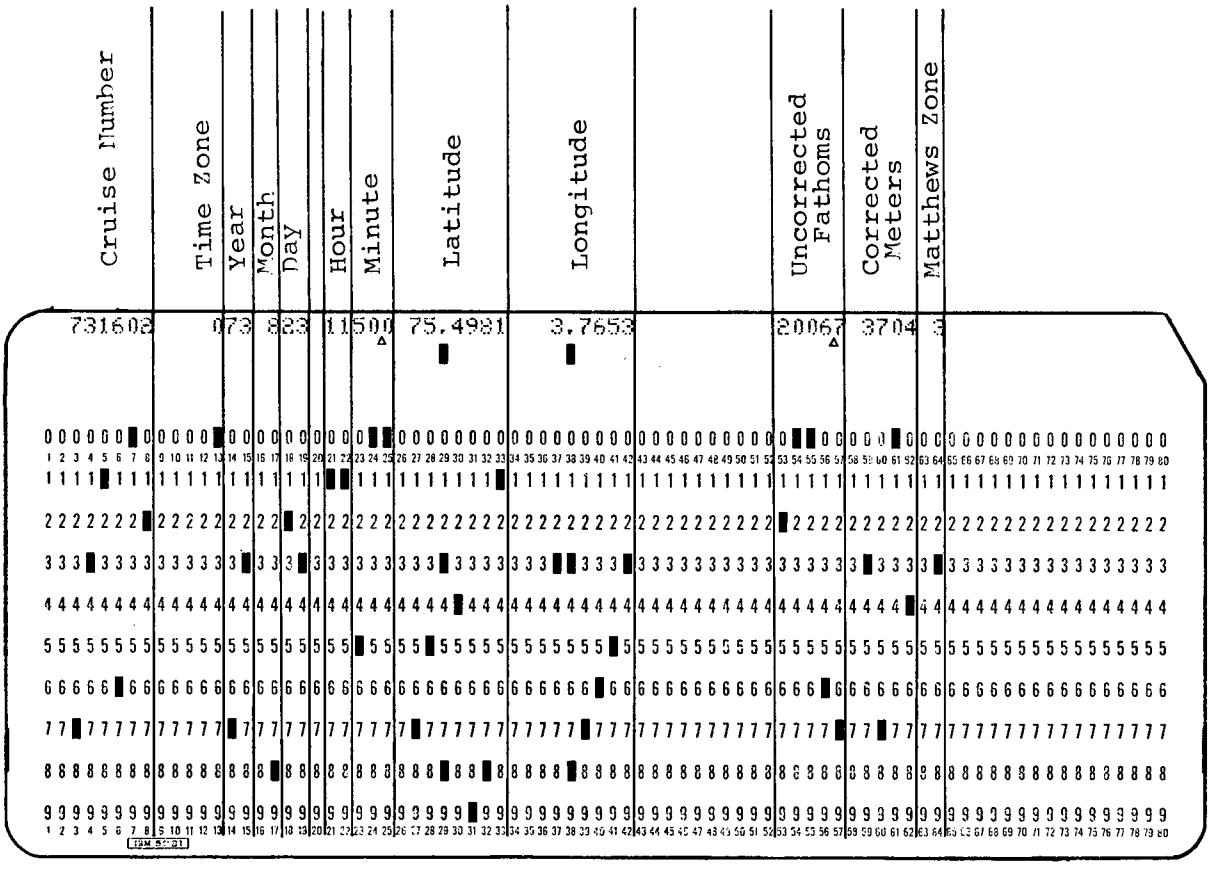

[Δ]Implies a decimal point.

MAGNETICS

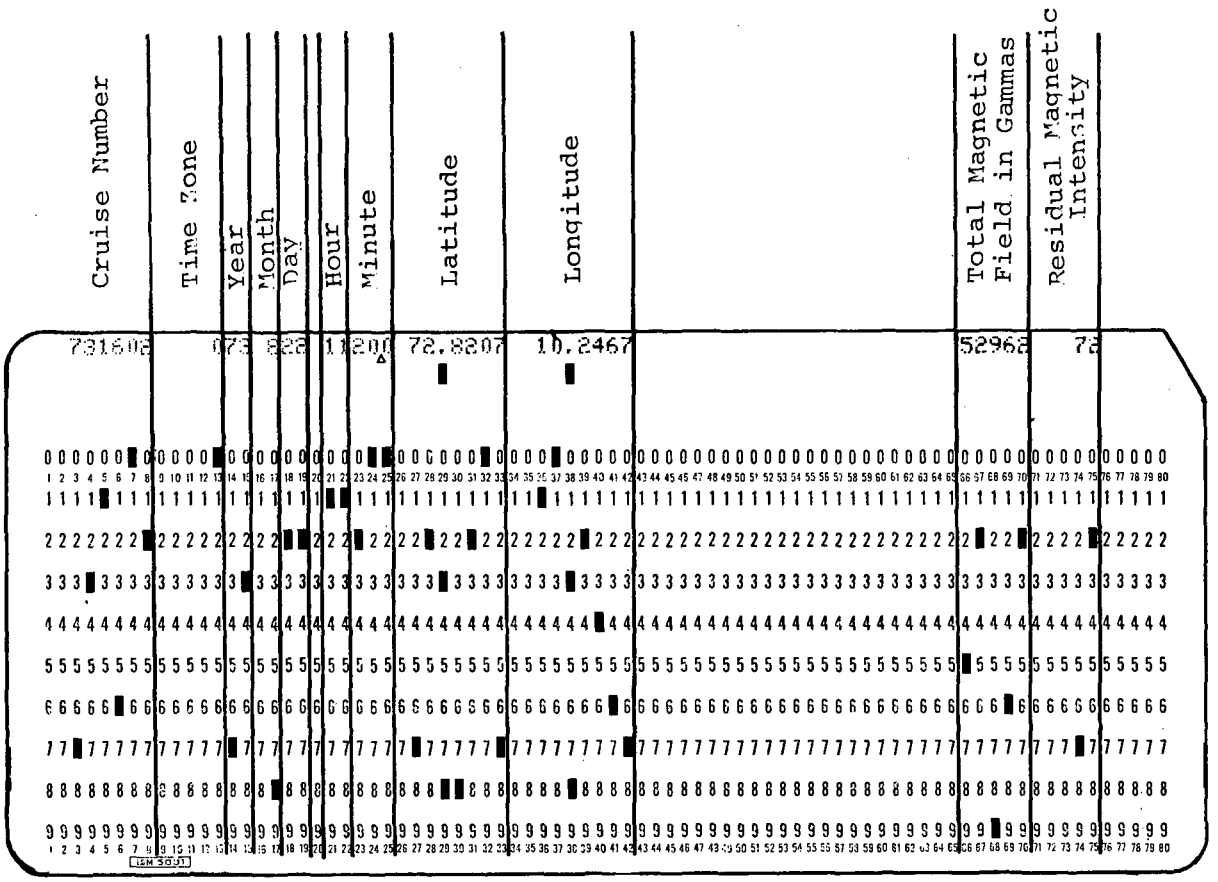

[Δ]Implies a decimal point.

UNCLASSIFIED

Appendix B

DECK ASSEMBLY FOR PROGRAM GEOREAD

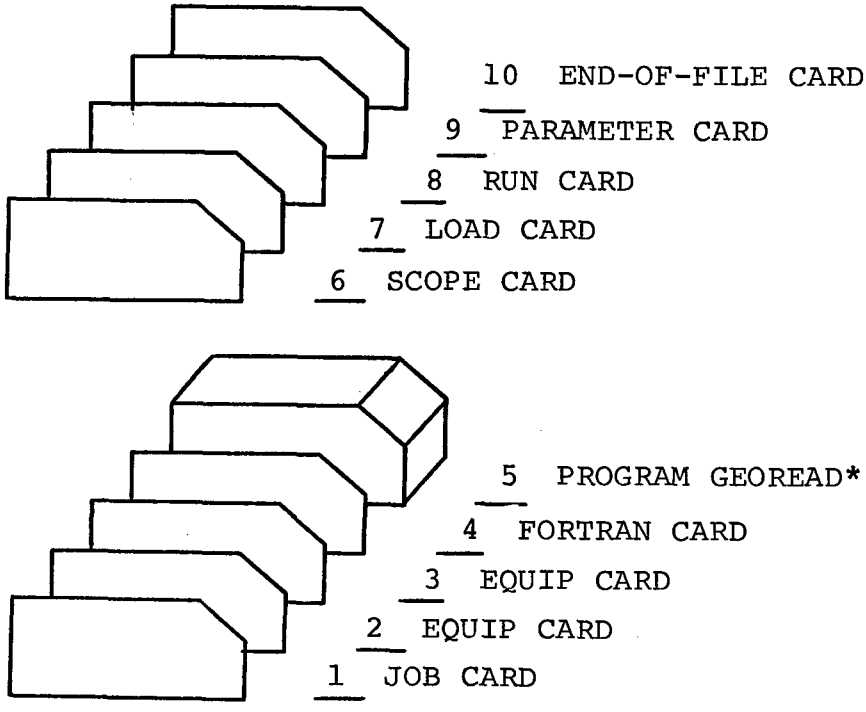

* If a binary deck is used in place of the Fortran source deck, then cards 4, 6, and 7 can be eliminated.

Card Number	Card Title	Column Number	Description
1	Job	1-21	7/9 JOB, charge No., ID No., time. See page 2-2 of the 3600/3800 Computer System Drum Scope Manual.
2	Equip	1-18	7/9 EQUIP, 10=**, RO, HI
3	Equip	1-18	7/9 EQUIP, 12=**, WO, HI 10, 12 = logical unit number. RO = read only. WO = write only. HI = high density. See Page 2-3 of the 3600/3800 Computer System Drum Scope Manual.
4	Fortran	1-6	7/9 FTN, X If a listing of the program is required, add an L after the X (7/9 FIN, X, L). See page 2-20 of the 3600/3800 Computer System Drum Scope Manual.
5	Program GEOREAD	Deck of Cards	Fortran program deck.
6	Scope	10-14	SCOPE
7	Load	1-5	7/9 LOAD
8	Run	1-13	7/9 RUN, T, P, R, M, D T = time limit in minutes P = maximum number of print or write operations. R, M, D may be left blank. See page 2-15 of the 3600/3800 Computer System Drum Scope Manual.
9	Parameter	1	0 or 1 0 = skip first file. 1 = copy first file.
		2	1, 2, or 3 The first file is: 1 = navigation, 2 = bathymetry, 3 = magnetics.

(Continued)

UNCLASSIFIED

Card Number	Card Title	Column Number	Description
		3	0, 1, or 2 0 = skip second file. 1 = copy second file 2 = end of files to be copied.
		4	1, 2, or 3 The second file is: 1 = navigation, 2 = bathymetry, 3 = magnetics.
		5	0, 1, or 2 0 = skip third file. 1 = copy third file. 2 = End of files to be copied.
		6	1, 2, or 3 The third file is: 1 = navigation, 2 = bathymetry, 3 = magnetics.
		8	0 or 1 0 = do not copy the specified files on magnetic tape 1 = copy the specified files on magnetic tape.
		10	0 or 1 0 = do not print a listing of the specified files. 1 = print a listing of the specified files.
		12	0 or 1 0 = do not punch cards of the specified files. 1 = do punch cards of the specified files (one card for each logical record).
		14	0, 1, or 2 0 = only the data within a certain area is to be copied. The latitude and longitude defining the area are in Columns 31-70. 1 = only the data taken during a certain time interval is to be copied. The beginning (Continued)

Card Number	Card Title	Column Number	Description
			and ending time are defined in Columns 15-30. 2 = all the data are to be copied.
		If Column 14 = 1:	
		15-22	07172130 This is the time the program starts copying data. Columns 15-16 = month, Columns 17-18 = day, Columns 19-20 = hour, Columns 21-22 = minute.
		23-30	08152215 This is the time the program stops copying the data. 23-24 = month, 25-26 = day, 27-28 = hour, 29-30 = minute.
		In the above example (Columns 15-30) the data between July 17 at 21 hours and 30 minutes and August 15 at 22 hours and 15 minutes will be copied.	
		If Column 14 = 0:	
		31-40	40.50 This is the southernmost latitude of the area to be copied.
		41-50	50.00 The northernmost latitude.
		51-60	−28.00 The westernmost longitude.
		61-70	−14.00 The easternmost longitude. Columns 31-70, the positions are in degrees and hundreths of a degree (not degrees and minutes). Southern latitudes and western longitudes are preceded by a minus sign.
10	End-of-File		One EOF card is needed to terminate the run.

UNCLASSIFIED

APPENDIX C

SAMPLE OUTPUT LISTING

NAVIGATION

SHIP AND CRUISE IDENTIFICATION	TIME ZONE	YEAR	MONTH	DAY	HOUR	MINUTE	LATITUDE	LONGITUDE	FIX DESCRIPTION	FIX NUMBER
73-16-02	0	73	8	22	10	6.0	72.7297	-10.3975	50	200
73-16-02	0	73	8	22	10	40.0	72.7710	-10.3330	50	201
73-16-02	0	73	8	22	10	50.0	72.7850	-10.3167	49	202
73-16-02	0	73	8	22	11	0.0	72.7953	-10.2895	50	203
73-16-02	0	73	8	22	11	30.0	72.8333	-10.2253	50	204
73-16-02	0	73	8	22	11	54.0	72.8647	-10.1642	50	205
73-16-02	0	73	8	22	12	28.0	72.9088	-10.0868	50	206
73-16-02	0	73	8	22	12	48.0	72.9333	-10.0395	50	207
73-16-02	0	73	8	22	13	14.0	72.9685	-9.9792	50	208
73-16-02	0	73	8	22	13	37.0	72.9983	-9.9100	49	209
73-16-02	0	73	8	22	14	14.0	73.0460	-9.8135	50	211
73-16-02	0	73	8	22	14	34.0	73.0708	-9.7570	50	212
73-16-02	0	73	8	22	15	0.0	73.1072	-9.6877	49	213
73-16-02	0	73	8	22	15	28.0	73.1255	-9.6198	50	214
73-16-02	0	73	8	22	15	47.0	73.1375	-9.5817	49	215
73-16-02	0	73	8	22	16	2.0	73.1718	-9.5027	50	216
73-16-02	0	73	8	22	16	46.0	73.2778	-9.2473	50	218
73-16-02	0	73	8	22	17	14.0	73.3527	-9.0855	50	219
73-16-02	0	73	8	22	17	48.0	73.4387	-8.8817	50	220
73-16-02	0	73	8	22	18	5.0	73.4817	-8.7667	49	221
73-16-02	0	73	8	22	18	8.0	73.4865	-8.7435	50	222
73-16-02	0	73	8	22	18	28.0	73.5247	-8.6728	50	223
73-16-02	0	73	8	22	19	8.0	73.5942	-8.4753	50	225
73-16-02	0	73	8	22	19	32.0	73.6428	-8.3643	50	226
73-16-02	0	73	8	22	19	52.0	73.6785	-8.2742	50	227
73-16-02	0	73	8	22	20	14.0	73.7192	-8.1853	50	229
73-16-02	0	73	8	22	20	34.0	73.7575	-8.0848	50	230
73-16-02	0	73	8	22	21	16.0	73.8378	-7.9065	50	231
73-16-02	0	73	8	22	21	38.0	73.8803	-7.8202	50	232
73-16-02	0	73	8	22	22	4.0	73.9320	-7.7025	50	233
73-16-02	0	73	8	22	22	28.0	73.9790	-7.6172	50	234
73-16-02	0	73	8	22	23	0.0	74.0432	-7.4810	50	235
73-16-02	0	73	8	22	23	22.0	74.0893	-7.3897	50	236
73-16-02	0	73	8	22	23	50.0	74.1465	-7.2443	50	237
73-16-02	0	73	8	23	0	10.0	74.1880	-7.1523	50	238
73-16-02	0	73	8	23	0	44.0	74.2580	-6.9860	50	239
73-16-02	0	73	8	23	1	4.0	74.3000	-6.8735	50	240
73-16-02	0	73	8	23	2	6.0	74.4165	-6.5770	50	241
73-16-02	0	0	0	0	0	0.0	0.0000	0.0000	0	0
73-16-02	0	0	0	0	0	0.0	0.0000	0.0000	0	0

BATHYMETRY

SHIP AND CRUISE IDENTIFICATION	TIME ZONE	YEAR	MONTH	DAY	HOUR	MINUTE	LATITUDE	LONGITUDE	UNCORRECTED FATHOMS	UNCORRECTED METERS	CORRECTED METERS	MATTHI ZONI
73-16-02	0	73	8	22	10	30.0	72.7588	-10.3520	1440.8	2635.0	2642	1
73-16-02	0	73	8	22	10	35.0	72.7649	-10.3425	1448.4	2649.0	2657	1
73-16-02	0	73	8	22	10	40.0	72.7710	-10.3330	1453.4	2658.0	2666	1
73-16-02	0	73	8	22	10	45.0	72.7780	-10.3248	1459.9	2670.0	2678	1
73-16-02	0	73	8	22	10	50.0	72.7850	-10.3167	1467.6	2684.0	2692	1
73-16-02	0	73	8	22	10	55.0	72.7902	-10.3031	1473.0	2694.0	2703	1
73-16-02	0	73	8	22	11	0.0	72.7953	-10.2895	1479.1	2705.0	2714	1
73-16-02	0	73	8	22	11	5.0	72.8017	-10.2788	1482.9	2712.0	2721	1
73-16-02	0	73	8	22	11	10.0	72.8080	-10.2681	1487.3	2720.0	2729	1
73-16-02	0	73	8	22	11	15.0	72.8143	-10.2574	1492.7	2730.0	2739	1
73-16-02	0	73	8	22	11	20.0	72.8207	-10.2467	1497.7	2739.0	2748	1
73-16-02	0	73	8	22	11	25.0	72.8270	-10.2360	1501.5	2746.0	2756	1
73-16-02	0	73	8	22	11	28.0	72.8308	-10.2296	1503.7	2750.0	2760	1
73-16-02	0	73	8	22	11	35.0	72.8399	-10.2126	1509.1	2760.0	2770	1
73-16-02	0	73	8	22	11	40.0	72.8464	-10.1998	1513.5	2768.0	2778	1
73-16-02	0	73	8	22	11	45.0	72.8529	-10.1871	1516.2	2773.0	2783	1
73-16-02	0	73	8	22	11	50.0	72.8594	-10.1744	1520.1	2780.0	2790	1
73-16-02	0	73	8	22	11	55.0	72.8660	-10.1619	1525.5	2790.0	2800	1
73-16-02	0	73	8	22	12	0.0	72.8725	-10.1505	1528.3	2795.0	2805	1
73-16-02	0	73	8	22	12	5.0	72.8790	-10.1391	1529.9	2798.0	2809	1
73-16-02	0	73	8	22	12	8.0	72.8829	-10.1323	1531.0	2800.0	2811	1
73-16-02	0	73	8	22	12	10.0	72.8855	-10.1278	1532.1	2802.0	2813	1
73-16-02	0	73	8	22	12	15.0	72.8919	-10.1164	1536.5	2810.0	2821	1
73-16-02	0	73	8	22	12	20.0	72.8984	-10.1050	1539.8	2816.0	2827	1
73-16-02	0	73	8	22	12	25.0	72.9049	-10.0937	1544.1	2824.0	2835	1
73-16-02	0	73	8	22	12	30.0	72.9113	-10.0821	1549.1	2833.0	2844	1
73-16-02	0	73	8	22	12	35.0	72.9174	-10.0703	1552.9	2840.0	2851	1
73-16-02	0	73	8	22	12	40.0	72.9235	-10.0584	1558.3	2850.0	2862	1
73-16-02	0	73	8	22	12	45.0	72.9297	-10.0466	1563.8	2860.0	2872	1
73-16-02	0	73	8	22	12	50.0	72.9360	-10.0349	1579.1	2888.0	2900	1
73-16-02	0	73	8	22	12	55.0	72.9428	-10.0233	1585.7	2900.0	2913	1
73-16-02	0	73	8	22	12	59.0	72.9482	-10.0140	1594.4	2916.0	2929	1
73-16-02	0	73	8	22	13	5.0	72.9563	-10.0001	1591.7	2911.0	2924	1
73-16-02	0	73	8	22	13	10.0	72.9631	-9.9884	1597.2	2921.0	2934	1
73-16-02	0	73	8	22	13	15.0	72.9698	-9.9762	1603.7	2933.0	2946	1
73-16-02	0	73	8	22	13	20.0	72.9763	-9.9611	1607.6	2940.0	2953	1
73-16-02	0	73	8	22	13	25.0	72.9828	-9.9461	1605.4	2936.0	2949	1
73-16-02	0	73	8	22	13	30.0	72.9893	-9.9311	1605.4	2936.0	2949	1
73-16-02	0	73	8	22	13	35.0	72.9957	-9.9160	1604.8	2935.0	2948	1
73-16-02	0	73	8	22	13	40.0	73.0022	-9.9022	1604.8	2935.0	2948	1
73-16-02	0	73	8	22	13	45.0	73.0086	-9.8891	1603.7	2933.0	2946	1
73-16-02	0	73	8	22	13	50.0	73.0151	-9.8761	1603.2	2932.0	2945	1
73-16-02	0	73	8	22	13	55.0	73.0215	-9.8631	1602.6	2931.0	2944	1
73-16-02	0	73	8	22	14	0.0	73.0280	-9.8500	1604.8	2935.0	2948	1
73-16-02	0	73	8	22	14	5.0	73.0344	-9.8370	1605.4	2936.0	2949	1
73-16-02	0	73	8	22	14	10.0	73.0408	-9.8239	1610.3	2945.0	2959	1
73-16-02	0	73	8	22	14	12.5	73.0441	-9.8174	1613.0	2950.0	2964	1
73-16-02	0	73	8	22	14	20.0	73.0534	-9.7965	1626.7	2975.0	2989	1
73-16-02	0	73	8	22	14	25.0	73.0597	-9.7824	1639.3	2998.0	3013	1
73-16-02	0	73	8	22	14	30.0	73.0659	-9.7683	1634.4	2989.0	3004	1
73-16-02	0	73	8	22	14	35.0	73.0722	-9.7543	1632.2	2985.0	2999	1
73-16-02	0	73	8	22	14	40.0	73.0792	-9.7410	1632.2	2985.0	2999	1
73-16-02	0	73	8	22	14	45.0	73.0862	-9.7277	1632.2	2985.0	2999	1
73-16-02	0	73	8	22	14	50.0	73.0932	-9.7143	1630.0	2981.0	2995	1
73-16-02	0	73	8	22	14	55.0	73.1002	-9.7010	1629.4	2980.0	2994	1
73-16-02	0	73	8	22	15	0.0	73.1072	-9.6877	1629.4	2980.0	2995	2
73-16-02	0	73	8	22	15	5.0	73.1104	-9.6756	1628.3	2978.0	2993	2
73-16-02	0	73	8	22	15	10.0	73.1137	-9.6634	1627.2	2976.0	2991	2
73-16-02	0	73	8	22	15	15.0	73.1170	-9.6513	1626.7	2975.0	2990	2

UNCLASSIFIED

MAGNETICS

SHIP AND CRUISE IDENTIFICATION	TIME ZONE	YEAR	MONTH	DAY	HOUR	MINUTE	LATITUDE	LONGITUDE	TOTAL MAGNETIC INTENSITY	RESIDUAL MAGNETIC INTENSITY
73-16-02	0	73	8	22	11	10.0	72.8080	-10.2681	52969	155
73-16-02	0	73	8	22	11	15.0	72.8143	-10.2574	52964	149
73-16-02	0	73	8	22	11	20.0	72.8207	-10.2467	52962	146
73-16-02	0	73	8	22	11	25.0	72.8270	-10.2360	52962	145
73-16-02	0	73	8	22	11	30.0	72.8333	-10.2253	52965	147
73-16-02	0	73	8	22	11	35.0	72.8399	-10.2126	52964	144
73-16-02	0	73	8	22	11	40.0	72.8464	-10.1998	52957	136
73-16-02	0	73	8	22	11	45.0	72.8529	-10.1871	52965	143
73-16-02	0	73	8	22	11	50.0	72.8594	-10.1744	52955	132
73-16-02	0	73	8	22	11	55.0	72.8660	-10.1619	52948	124
73-16-02	0	73	8	22	12	0.0	72.8725	-10.1505	52935	110
73-16-02	0	73	8	22	12	5.0	72.8790	-10.1391	52934	108
73-16-02	0	73	8	22	12	10.0	72.8855	-10.1278	52938	110
73-16-02	0	73	8	22	12	15.0	72.8919	-10.1164	52947	118
73-16-02	0	73	8	22	12	20.0	72.8984	-10.1050	52982	152
73-16-02	0	73	8	22	12	25.0	72.9049	-10.0937	52995	164
73-16-02	0	73	8	22	12	30.0	72.9113	-10.0821	53035	203
73-16-02	0	73	8	22	12	35.0	72.9174	-10.0703	53075	242
73-16-02	0	73	8	22	12	40.0	72.9235	-10.0584	53124	290
73-16-02	0	73	8	22	12	45.0	72.9297	-10.0466	53162	327
73-16-02	0	73	8	22	12	50.0	72.9360	-10.0349	53197	361
73-16-02	0	73	8	22	12	55.0	72.9428	-10.0233	53224	386
73-16-02	0	73	8	22	13	0.0	72.9496	-10.0117	53235	396
73-16-02	0	73	8	22	13	5.0	72.9563	-10.0001	53230	390
73-16-02	0	73	8	22	13	10.0	72.9631	-9.9884	53206	365
73-16-02	0	73	8	22	13	15.0	72.9698	-9.9762	53165	323
73-16-02	0	73	8	22	13	20.0	72.9763	-9.9611	53111	267
73-16-02	0	73	8	22	13	25.0	72.9828	-9.9461	53043	198
73-16-02	0	73	8	22	13	30.0	72.9893	-9.9311	52996	150
73-16-02	0	73	8	22	13	35.0	72.9957	-9.9160	52931	84
73-16-02	0	73	8	22	13	40.0	73.0022	-9.9022	52865	17
73-16-02	0	73	8	22	13	45.0	73.0086	-9.8891	52820	-29
73-16-02	0	73	8	22	13	50.0	73.0151	-9.8761	52791	-59
73-16-02	0	73	8	22	13	55.0	73.0215	-9.8631	52769	-82
73-16-02	0	73	8	22	14	0.0	73.0280	-9.8500	52756	-96
73-16-02	0	73	8	22	14	5.0	73.0344	-9.8370	52764	-89
73-16-02	0	73	8	22	14	10.0	73.0408	-9.8239	52784	-71
73-16-02	0	73	8	22	14	15.0	73.0472	-9.8107	52809	-47
73-16-02	0	73	8	22	14	20.0	73.0534	-9.7965	52826	-31
73-16-02	0	73	8	22	14	25.0	73.0597	-9.7824	52828	-30
73-16-02	0	73	8	22	14	30.0	73.0659	-9.7683	52833	-26
73-16-02	0	73	8	22	14	35.0	73.0722	-9.7543	52835	-25
73-16-02	0	73	8	22	14	40.0	73.0792	-9.7410	52849	-12
73-16-02	0	73	8	22	14	45.0	73.0862	-9.7277	52862	0
73-16-02	0	73	8	22	14	50.0	73.0932	-9.7143	52874	10
73-16-02	0	73	8	22	14	55.0	73.1002	-9.7010	52893	28
73-16-02	0	73	8	22	15	0.0	73.1072	-9.6877	52917	51
73-16-02	0	73	8	22	15	5.0	73.1104	-9.6756	52936	69
73-16-02	0	73	8	22	15	10.0	73.1137	-9.6634	52946	79
73-16-02	0	73	8	22	15	15.0	73.1170	-9.6513	52954	86
73-16-02	0	73	8	22	15	20.0	73.1203	-9.6392	52956	88
73-16-02	0	73	8	22	15	25.0	73.1235	-9.6271	52957	89
73-16-02	0	73	8	22	15	30.0	73.1268	-9.6158	52959	90
73-16-02	0	73	8	22	15	35.0	73.1299	-9.6058	52961	92
73-16-02	0	73	8	22	15	40.0	73.1331	-9.5957	52961	91
73-16-02	0	73	8	22	15	45.0	73.1362	-9.5857	52985	115
73-16-02	0	73	8	22	15	50.0	73.1444	-9.5659	52987	115
73-16-02	0	73	8	22	15	55.0	73.1558	-9.5395	53005	131
73-16-02	0	73	8	22	16	0.0	73.1673	-9.5132	53014	138

UNCLASSIFIED

```
SHIP AND CRUISE IDENTIFICATION        731602
NAVIGATION DATA
NUMBER OF NAVIGATION CARDS READ =    60
NUMBER OF LOGICAL RECORDS WRITTEN ON TAPE =    60

BATHYMETRY DATA
DEPTH DATA GIVEN IN UNCORRECTED METERS
MATTHEWS ZONES PASSED THROUGH WERE    1    2    3
NUMBER OF BATHYMETRY CARDS READ =    72
NUMBER OF LOGICAL RECORDS WRITTEN =    357

MAGNETICS DATA
HEIGHT IN FEET ABOVE OR BELOW SEA LEVEL IS    -20
NUMBER OF MAGNETICS CARDS READ =          23
NUMBER OF LOGICAL RECORDS WRITTEN =          258
```

UNCLASSIFIED

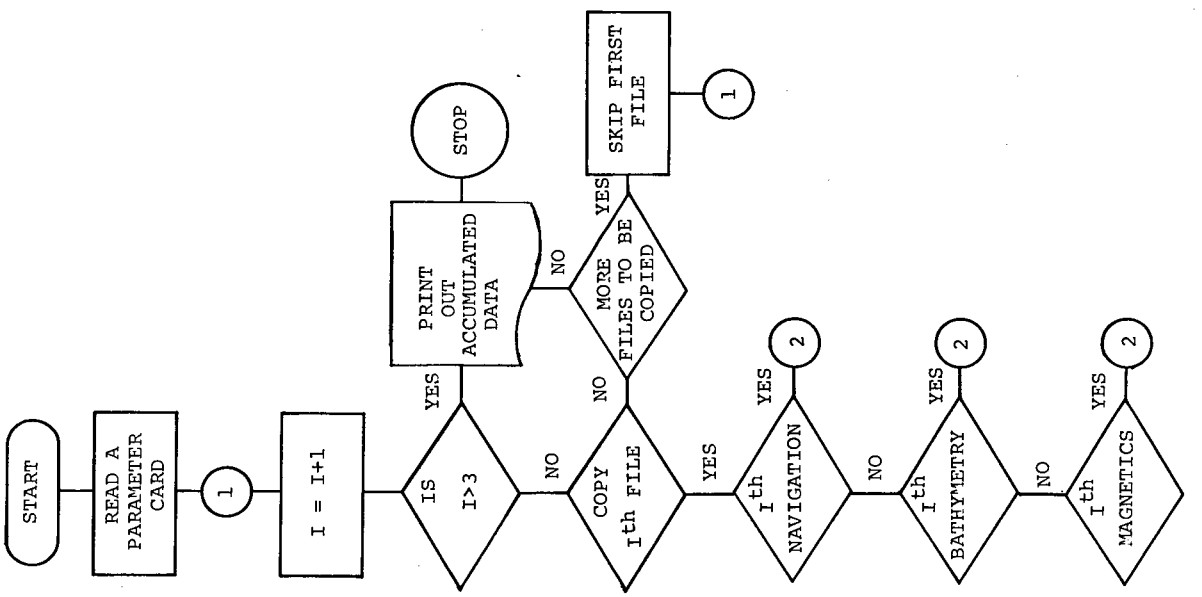

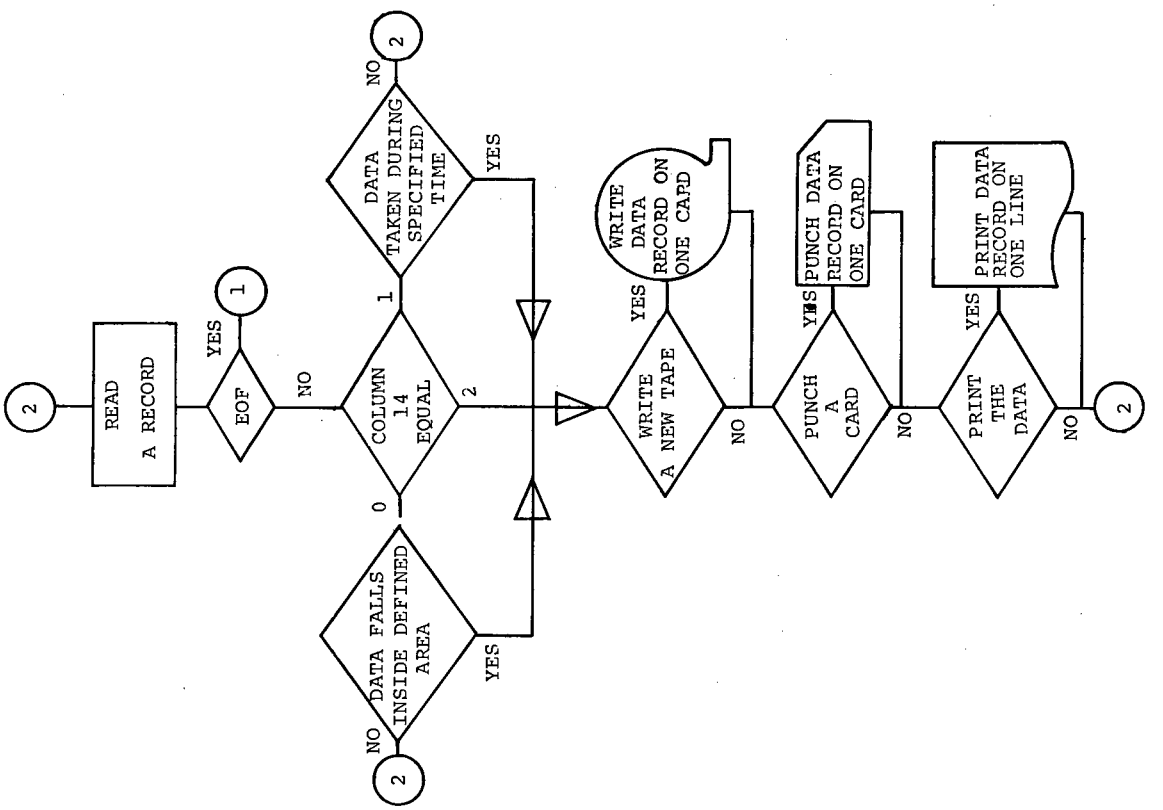

Appendix D2

SOURCE LANGUAGE LISTING

```
      PROGRAM GEOREAD
      REAL LATMIN,LATMAX,LONGMAX,LONGMIN
      DIMENSION IFILE(3),ITYPE(3)
C  READ INPUT CARDS
      READ(60,1)(IFILE(M),ITYPE(M),M=1,3),ICOPY,LIST,IPUNCH,ISKIP,IDATE1
     1,IHR1,IDATE2,IHR2,LATMIN,LATMAX,LONGMIN,LONGMAX
 1    FORMAT(6I1,4I2,4I4,4F10.5)
 3    I=I + 1
      NUM=1
      IF(I.GT.3) GO TO 600
      IF(IFILE(I).EQ.1) GO TO 4
      IF(IFILE(I).EQ.2) GO TO 600
      CALL SKIPFILE(10)
      GO TO 3
 4    KIND=ITYPE(I)
      GO TO (101,201,301),KIND
C  NAVIG FILE
 100  IF(ICOPY.NE.1) GO TO 20
      GO TO 10
 101  READ(10,5)CRUISE,ITMZNE,IYEAR,MONTH,IDAY,HR,XMIN,XLAT,XLONG,IFIX,
     1NAVFIX
 5    FORMAT(A8,I5,I2,I2,I2,1XF2,F3,F8.4,F9.4,1XI1,7XI5,24X)
      IF(ICCHECK.10) 101,6
 6    IF(EOF.10) 500,7
 7    IRDN=IRDN + 1
      IF(ISKIP-1)8,9,100
 10   WRITE(12,5)CRUISE,ITMZNE,IYEAR,MONTH,IDAY,HR,XMIN,XLAT,XLONG,
     1IFIX,NAVFIX
      ICN=ICN + 1
      GO TO 20
 8    IF(XLAT.LT.LATMIN.OR.XLAT.GT.LATMAX .OR.XLONG.LT.LONGMIN.OR.XLONG.
     1GT.LONGMAX) GO TO 101
      GO TO 100
 9    IDAY1=MONTH*100 + IDAY
      MINUTE=HR*100 + XMIN/10
      IF(IDAY1.LT.IDATE1.OR.IDAY1.GT.IDATE2) GO TO 101
      IF(IDAY1.EQ.IDATE1.AND.MINUTE.LE.IHR1.OR.IDAY1.EQ.IDATE2.AND.MINUT
     1E.GE.IHR2) GO TO 101
      GO TO 100
C   CHECK IF PUNCH CARD
 20   IF(IPUNCH.NE.1) GO TO 30
      WRITE(62,5) CRUISE,ITMZNE,IYEAR,MONTH,IDAY,HR,XMIN,XLAT,XLONG,
     1IFIX,NAVFIX
C  CHECK IF LIST
 30   IF(LIST.NE.1) GO TO 101
      IF(MOD(NUM,60).NE.1) GO TO 32
      WRITE(61,501)
 501  FORMAT(1H1,123HSHIP AND CRUISE      TIME      YEAR      MONTH      DAY
     1      HOUR      MINUTE      LATITUDE      LONGITUDE          FIX
     2   FIX)
      WRITE(61,502)
 502  FORMAT(1H ,24HIDENTIFICATION       ZONE,79X,22HDESCRIPTION      NUMB
     1ER)
      NUM=1
 32   ZMIN=XMIN/10
      WRITE(61,51)CRUISE,ITMZNE,IYEAR,MONTH,IDAY,HR,ZMIN,XLAT,XLONG,
```

UNCLASSIFIED

```
     1IFIX,NAVFIX
 31   FORMAT(1H ,2XA8,7XI5,7XI2,7XI2,7XI2,7XF2,7XF4.1,6XF8.4,5XF9.4,
     19XI2,10XI5)
      NUM=NUM + 1
      GO TO 101
  500 IF(ICOPY.NE.1) GO TO 3
      ENDFILE 12
      GO TO 3
C  BATHYMETRY FILE
 200  IF(ICOPY.NE.1) GO TO 60
      GO TO 50
 201  READ(10,40)CRUISE,ITMZNE,IYEAR,MONTH,IDAY,HR,XMIN,XLAT,XLONG,
     1UAVFIX,ICRMET,IFIX
 40   FORMAT(A8,I5,3I2,1XF2,F3,F8.4,F9.4,10XF5,I5,I2,16X)
      IF(IOCHECK.10) 201,46
 46   IF(EOF,10) 500,47
 47   IRDB=IRDB + 1
      IF(ISKIP-1) 48,49,200
  50  WRITE(12,40)CRUISE,ITMZNE,IYEAR,MONTH,IDAY,HR,XMIN,XLAT,XLONG,
     1UAVFIX,ICRMET,IFIX
      ICB=ICB + 1
      GO TO 60
 48   IF(XLAT.LT.LATMIN.OR.XLAT.GT.LATMAX .OR.XLONG.LT.LONGMIN.OR.XLONG.
     1GT.LONGMAX) GO TO 201
      GO TO 200
 49   IDAY1=MONTH*100 + IDAY
      MINUTE=HR*100 + XMIN/10
      IF(IDAY1.LT.IDATE1.OR.IDAY1.GT.IDATE2) GO TO 201
      IF(IDAY1.EQ.IDATE1.AND.MINUTE.LE.IHR1.OR.IDAY1.EQ.IDATE2.AND.MINUTE.GE.IHR
     2E.GE.IHR2) GO TO 201
      GO TO 200
C  CHECK IF PUNCH BATHYMETRY
 60   IF(IPUNCH.NE.1) GO TO 51
      WRITE(62,40) CRUISE,ITMZNE,IYEAR,MONTH,IDAY,HR,XMIN,XLAT,XLONG,
     1UAVFIX,ICRMET,IFIX
C  CHECK IF LIST BATHYMETRY
 51   IF(LIST.NE.1) GO TO 201
      IF(MOD(NUM,60).NE.1) GO TO 52
      WRITE(61,504)
 504  FORMAT(1H1,133HSHIP AND CRUISE   TIME   YEAR   MONTH   DAY   HOUR
     1  MINUTE   LATITUDE   LONGITUDE   UNCORRECTED   UNCORRECTED   CORR
     2ECTED   MATTHEWS)
      WRITE(61,505)
 505  FORMAT(1H ,22HIDENTIFICATION    ZONE,65X,44HFATHOMS       METERS
     1      METERS       ZONE)
       NUM=1
 52   ZMIN=XMIN/10
      ZAVFIX=UAVFIX/10
      SIDP=ZAVFIX*1.8288
      WRITE(61,41)CRUISE,ITMZNE,IYEAR,MONTH,IDAY,HR,ZMIN,XLAT,XLONG,
     1ZAVFIX,SIDP,ICRMET,IFIX
 41   FORMAT(1H ,2XA8,5XI5,3(5XI2),5XF2,5XF4.1,4XF8.4,3XF9.4,5XF6.1,8XF6.1,
     1,1,7XI5,9XI2)
      NUM=NUM + 1
      GO TO 201
C  MAGNETICS FILE
```

```
300   IF(ICOPY.NE.1) GO TO 70
      GO TO 310
301   READ(10,60)CRUISE,ITMZNE,IYEAR,MONTH,IDAY,HR,XMIN,XLAT,XLONG,
     1NAVFIX,ICRMET
60    FORMAT(A8,I5,3I2,1XF2,F3,F8.4,F9.4,3X2I5,5X)
      IF(ICOCHECK.10) 301,306
306   IF(EOF.10) 600,307
307   IRDM=IRDM + 1
      IF(ISKIP=1) 308,309,300
310   WRITE(12,60)CRUISE,ITMZNE,IYEAR,MONTH,IDAY,HR,XMIN,XLAT,XLONG,
     1NAVFIX,ICRMET
      ICM=ICM + 1
      GO TO 70
308   IF(XLAT.LT.LATMIN.OR.XLAT.GT.LATMAX .OR.XLONG.LT.LONGMIN.OR.XLONG.
     1GT.LONGMAX) GO TO 301
      GO TO 300
309   IDAY1=MONTH*100 + IDAY
      MINUTE=HR*100 + XMIN/10
      IF(IDAY1.LT.IDATE1.OR.IDAY1.GT.IDATE2) GO TO 301
      IF(IDAY1.EQ.IDATE1.AND.MINUTE.LE.IHR1.OR.IDAY1.EQ.IDATE2.AND.
     1MINUTE.GE.IHR2) GO TO 301
      GO TO 300
C  CHECK IF PUNCH MAGNETICS RECORDS
70    IF(IPUNCH.NE.1) GO TO 80
      WRITE(62,60)CRUISE,ITMZNE,IYEAR,MONTH,IDAY,HR,XMIN,XLAT,XLONG,
     1NAVFIX,ICRMET
C  CHECK IF LIST
80    IF(LIST.NE.1) GO TO 301
      IF(MOD(NUM,60).NE.1) GO TO 72
      WRITE(61,507)
 07   FORMAT(1H1,129HSHIP AND CRUISE    TIME    YEAR    MONTH    DAY
     1HOUR    MINUTE    LATITUDE    LONGITUDE    TOTAL MAGNETIC    RESID
     2UAL MAGNETIC)
      WRITE(61,508)
508   FORMAT(1H ,23HIDENTIFICATION     ZONE,73X,29HINTENSITY
     1NTENSITY)
      NLM=1
 2    ZMIN=XMIN/10
      WRITE(61,73)CRUISE,ITMZNE,IYEAR,MONTH,IDAY,HR,ZMIN,XLAT,XLONG,
     1NAVFIX,ICRMET
73    FORMAT(1H ,2XA8,6XI5,3(6XI2),6XF2,6XF4.1,5XF8.4,4XF9.4,8XI5,15XI5)
      NLM=NUM + 1
      GO TO 301
600   IF(ICOPY.NE.1) GO TO 700
      ENDFILE 12
      ENDFILE 12
      REWIND 12
C  WRITE OUT FINAL DATA
700   IF(ISKIP=1) 400,401,402
402   WRITE(61,403)
403   FORMAT(1H1,46HTHE PROGRAM SHOULD HAVE COPIED THE ENTIRE TAPE)
      GO TO 410
400   WRITE(61,404)
404   FORMAT(1H1,70HTHE PROGRAM SHOULD HAVE COPIED  ALL THE DATE POINTS
     1WHICH FALL BETWEEN)
      WRITE(61,405) LATMIN,LATMAX
```

UNCLASSIFIED

```
405   FORMAT(1H0,7X,16HSOUTH LATITUDE  ,F10.5,5X16HNORTH LATITUDE  ,F10.
     15)
      WRITE(61,406)LONGMIN,LONGMAX
406   FORMAT(1H0,7X16HWEST LONGITUDE  ,F10.5,5X16HEAST LONGITUDE  ,F10.5
     1)
      GO TO 410
401   WRITE(61,407)
407   FORMAT(1H1,75HTHE PROGRAM SHOULD HAVE COPIED ALL THE DATA POINTS W
     1HICH WERE TAKEN BETWEEN)
      MO1=IDATE1/100
      DAY1=IDATE1-MO1*100
      ITM1=IHR1/100
      IMIN1=IHR1-ITM1*100
      MO2=IDATE2/100
      DAY2=IDATE2-MO2*100
      ITM2=IHR2/100
      IMIN2=IHR2-ITM2*100
      WRITE(61,408)MO1,DAY1,ITM1,IMIN1
408   FORMAT(1H0,7HMONTH  ,I2,3X5HDAY  ,F2,3X4HHR  ,I2,3X5HMIN  ,I2)
      WRITE(61,409)MO2,DAY2,ITM2,IMIN2
409   FORMAT(1H0,7HMONTH  ,I2,3X5HDAY  ,F2,3X4HHR  ,I2,3X5HMIN  ,I2)
410   WRITE(61,411)IRDN,ICN
411   FORMAT(1H0,19HTHE PROGRAM READ   ,I8,5X32HNAVIGATION RECORDS AND C
     1OPIED   ,I8,5X7HRECORDS)
      WRITE(61,412)IRDB,ICB
412   FORMAT(1H0,19HTHE PROGRAM READ   ,I8,5X32HBATHYMETRY RECORDS AND C
     1OPIED   ,I8,5X7HRECORDS)
      WRITE(61,413) IRDM,ICM
 13   FORMAT(1H0,19HTHE PROGRAM READ   ,I8,5X32HMAGNETICS RECORDS AND CO
     1PIED    ,I8,5X7HRECORDS)
      STOP
      END


5,4DS   GEOREAD

                                        IDENT     GEOREAD
      PROGRAM LENGTH              02113
      ENTRY POINTS    GEOREAD     00631
      EXTERNAL SYMBOLS
                      Q8CENTRY
                      THEND,
                      Q1C10100
                      Q8CSTOPS
                      Q8CDICT,
                      SKIPFILE
                      XMODF
                      Q8CIFEOF
                      Q8CIFIOC
                      EFT,
                      REW,
                      TSH,
                      STH,
                      QNSINGL,
         00356 SYMBOLS
LOAD
RUN,60,9500
```

```
PROGRAM NAMES
1 75664  GEOREAD   02113     1 75430  ALLOC,    00234     1 73162  IOH,      02246     1 73140  Q8QLOADA  00022
1 72713  Q8QERROR  00225     1 71336  IOP,      01355     1 71300  STH,      00036     1 71233  TSH,      00045
1 71216  REW,      00015     1 71172  EFT,      00024     1 71137  Q8QIFIOC  00033     1 71112  Q8QXMODF  00025
1 71057  BACKSKIP  00033     1 71017  C8CPAUSE  00040     1 70633  Q1QSTORE  00164     1 70210  IOS,      00423
1 70132  Q8QENTRY  00056

PROGRAM EXTENS,
NONE

LABELED COMMON
NONE

NUMBERED COMMON
NONE

ENTRY POINTS
0 77777  SENTRY              1 76515  GEOREAD             1 70136  Q8QENTRY            1 70527  THEND,
1 70742  C1Q10100            1 71017  C8CSTOPS            1 70132  Q8QDICT,            1 71070  SKIPFILE
1 71121  XMODF               1 71146  C8CIFEOF            1 71142  Q8QIFIOC            1 71175  EFT,
1 71221  REW,                1 71237  TSH,                1 71304  STH,                1 70521  QNSINGL,
1 71341  IOP,                1 70263  C8CHIST,            1 72715  Q8QERROR            1 70133  EXIT
1 70533  IOR,                1 70230  IOS,                1 73140  Q8QLOADA            1 70210  IOE,
1 73206  IOH,                1 75303  ,TSERR,             1 73162  BCDBUF,             1 75566  ALLOC,
1 75436  RETURN,             1 75542  BUSY,               1 75551  IRETURN,            1 70524  QNDOUBL,
1 75632  ALLOCIN,            1 74776  ELD,                1 75262  ,REPCNT,            1 73161  Q8OLDCON
1 73156  C8QLODA             1 72713  C8ERRORN            1 72714  Q8NOTRAC            1 73031  Q8QERSET
1 73043  C8QERSTP            1 72360  ETAB,               1 71115  Q8QXMODF            1 71062  BACKFILE
1 71025  C8CPAUSE            1 70721  C1C10010            1 70721  Q1Q10020            1 70667  Q1Q10030
1 70714  C1Q10120            1 70673  C1C10130            1 70750  Q1Q10200            1 70676  Q1Q10210
1 70676  C1Q10230            1 70742  C1C10300            1 70725  Q1Q10310            1 70714  Q1Q10320
1 70735  C1Q10400            1 70730  C1C10410            1 70707  Q1Q10420            1 70707  Q1Q10430
1 70633  C3Q10040            1 70633  C3C10140            1 70633  Q3Q10240            1 70633  Q3Q10340
1 70633  Q3Q10440            1 70402  C8CCHAIN

EXECUTION STARTED AT   1957 -06
```