SECURITY CLASSIFICATION OF THIS PAGE (When Data Entered)

REPORT DOCUMENTATION PAGE		READ INSTRUCTIONS BEFORE COMPLETING FORM
1. REPORT NUMBER NRL Report 7674	2. GOVT ACCESSION NO.	3. RECIPIENT'S CATALOG NUMBER
4. TITLE (and Subtitle) DETERMINATION OF FRACTURE-RESISTANCE VALUES USING THE CENTER-CRACKED TENSILE SPECIMEN		5. TYPE OF REPORT & PERIOD COVERED Final on one phase of the NRL problem. 6. PERFORMING ORG. REPORT NUMBER
7. AUTHOR(s) A. M. Sullivan and J. Stoop		8. CONTRACT OR GRANT NUMBER(s)
9. PERFORMING ORGANIZATION NAME AND ADDRESS Naval Research Laboratory Washington, D.C. 20375		10. PROGRAM ELEMENT, PROJECT, TASK AREA & WORK UNIT NUMBERS NRL Problem M01-28 Project WR 022-04-001
11. CONTROLLING OFFICE NAME AND ADDRESS Department of the Navy Naval Air Systems Command Washington, D.C. 20360		12. REPORT DATE April 3, 1974 13. NUMBER OF PAGES 24
14. MONITORING AGENCY NAME & ADDRESS(if different from Controlling Office)		15. SECURITY CLASS. (of this report) Unclassified 15a. DECLASSIFICATION/DOWNGRADING SCHEDULE

16. DISTRIBUTION STATEMENT (of this Report)

Approved for public release; distribution unlimited.

17. DISTRIBUTION STATEMENT (of the abstract entered in Block 20, if different from Report)

18. SUPPLEMENTARY NOTES

19. KEY WORDS (Continue on reverse side if necessary and identify by block number)

Center-crack tension specimen
Crack-opening displacement COD
Fracture resistance
Fracture-resistance parameter K_c
Slant fracture
Specimen size requirements
Specimen testing procedure

20. ABSTRACT (Continue on reverse side if necessary and identify by block number)

The results of a series of investigations at NRL are tabulated as guidelines for the use of the center-crack tensile (CCT) specimen. These investigations will assist in the development of a standard test method for the determination of fracture resistance in terms of K_c, the linear-elastic fracture mechanics (LEFM) parameter for thin-sheet material. Some relationships are discussed which permit a simplification of testing procedures for screening purposes.

DD FORM 1 JAN 73 1473 EDITION OF 1 NOV 65 IS OBSOLETE
S/N 0102-014-6601

SECURITY CLASSIFICATION OF THIS PAGE (When Data Entered)

CONTENTS

INTRODUCTION 1

SPECIMEN PREPARATION 1

Specimen 1
Starter Notch $2a_0$ 1
Crack-Tip Root Radius 2

SPECIMEN SIZE REQUIREMENTS 2

SPECIMEN AND LOADING FIXTURES THE COD PROBE 4

Loading Grip Fixtures 4
Buckling Restraints (Face Plates) 4
Displacement 4
Hole Probe 4
Double-Cantilever-Beam Gage 4

SPECIMEN TESTING PROCEDURES 8

DETERMINATION OF THE K_c VALUES 10

ESTIMATE OF K_c FROM THE FRACTURE APPEARANCE 11

INTERPRETATION OF THE RESULTS 12

APPENDIX A — Specimen Size Requirements 13

APPENDIX B — Calibration Curve EB[COD]/P vs 2a/W for the Double-Cantilever-Beam Gage 16

REFERENCES 18

SYMBOLS AND CONVERSIONS 20

DETERMINATION OF FRACTURE-RESISTANCE VALUES USING THE CENTER-CRACKED TENSILE SPECIMEN

INTRODUCTION

Characterization of fracture resistance in terms of linear-elastic fracture mechanics (LEFM)parameter K_c for plane-stress conditions (thin sheet) has been handicapped by the fact that no standard test method has been accepted for K_c determination. The reason for this lag in the development of a standardized test, despite the advantages of reliable K_c values for fail-safe design, is that this parameter is sensitive to a number of variables: specimen width W, specimen thickness B, crack-length-to-width ratio 2a/W, and K_c-to-yield-stress ratio K_c / σ_{ys}.

A research program initiated at NRL in 1970 for the determination of K_c in thin-sheet materials had two objectives: (a) to assist in the development of a standard testing procedure and (b) to develop a data bank of K_c values for a reasonable number of aluminum, titanium and steel alloys. The results of these investigations (1-14) now permit tabulation in the form of a proposed standardized test for screening purposes using the center-cracked tensile (CCT) sheet specimen.

SPECIMEN PREPARATION

Specimen

The CCT specimen is, as its name implies, a sheet specimen containing a central notch. Specific dimensions are outlined in the next section. General requirements are:

Width W: measured and accured to 0.5% of W;

Length L: measured between the innermost pins such that

$$L = 2W, \; W \leqslant 12 \text{ in.},$$

$$L = 1.5W, \; W > 12 \text{ in.};$$

Thickness B: measured after separation of the specimen at four evenly spaced locations along the fracture path (but removed from the region affected by the shear lips) and accurate to 1% of B.

Starter Notch $2a_0$

The starter notch may be produced by electric-discharge machining, end milling, or saw cutting. It is centered with respect to the specimen width within 0.002W and

Manuscript submitted October 17, 1973.

with respect to the specimen length within 0.003L; it is 0.0625 in. (1.56 mm) wide. A recommended final crack length $2a_c$ is approximately 0.333W. Appendix A provides calculations for the determination of the initial crack length $2a_0$.

Crack-Tip Root Radius

Ideally the starter slot should be subtended by fatigue cracks not less than 0.05 in. (1.25 mm) long. Therefore, to facilitate fatiguing the root radii at the ends of the machined notches should be 0.003 in. (0.075 mm) or less.

However, in many instances facilities for the fatiguing operation are lacking. It has been found that root radii approximately 0.001 to 0.002 in. (0.025 to 0.050 mm) appear to effectively simulate the sharpness of a fatigue starter. This can be produced in two ways:

1. carefully and frequently sharpening the miling cutter;
2. extending the initial notch produced by electric discharge using a shim-stock anode to give a thin-slit (TS) extension of 0.05 in. (1.25 mm).

SPECIMEN SIZE REQUIREMENTS

Table 1 contains a range of specimen dimensions relative to the ratio of the yield stress to Young's modulus, σ_{ys}/E. However, it is recommended that where possible only one or two sizes be used, such as W = 12 and 24 in. This eliminates the necessity of changing loading heads and of performing a series of calibration curves for the determination of crack length.

Table 1
Width and Length Dimensions

English Units				International Units			
$\frac{\sigma_{ys}}{E}$* † ($\times 10^{-3}$)	$\frac{K_c}{\sigma_{ys}}$ ($\sqrt{in.}$)	W‡ (in.)	L# (in.)	$\frac{\sigma_{ys}}{E}$	$\frac{K_c}{\sigma_{ys}}$ ($\sqrt{m}$)	W (cm)	L (cm)
10.0	0.5	3	9¶	10.0	0.08	7.5	22.5
7.5	1.0	6	12	7.5	0.16	15.0	30.0
6.0	1.5	12	24	6.0	0.24	30.0	60.0
5.0	2.0	24	36	5.0	0.32	60.0	90.0
>5.0	2.5	36	54	75.0	0.40	90.0	135.0
>5.0	3.0	48	72	75.0	0.48	120.0	180.0

*σ_{ys} = yield stress.

†E = Young's modulus.

‡W = width measured and is accurate to o.5% of W.

#L = length between the innermost loading pins: L = 2W, W $\leqslant$ 12; L = 1.5 W, W $>$ 12.

¶ Pin-loaded specimen according to ASTM Standard E338.

Table 2 contains the range of initial crack lengths $2a_0$ required by variations in sheet thickness B relative to K_c/σ_{ys}.

The values set forth in the tables were established in accordance with the information and calcuations detailed in Appendix A.

Table 2
Initial Crack Lengths

English Units						International Units					
$\frac{K_c}{\sigma_{ys}}$ ($\sqrt{in.}$)	W (in.)	B (in.)	$\frac{2a_c}{W}$	$2a_c$ (in.)	$2a_0$ (in.)	$\frac{K_c}{\sigma_{ys}}$ ($\sqrt{m}$)	W (cm)	B (mm)	$\frac{2a_c}{W}$	$2a_c$ (cm)	$2a_0$ (cm)
0.5	3	0.03125	0.333	1.0	0.70	0.08	7.5	0.78	0.333	2.5	1.75
		0.0625	0.333	1.0	0.76			1.56	0.333	2.5	1.90
		0.09375	0.333	1.0	0.80			2.34	0.333	2.5	2.00
		0.125	0.333	1.0	0.82			3.12	0.333	2.5	2.05
		0.1875	0.333	1.0	0.86			4.68	0.333	2.5	2.15
		0.25	0.333	1.0	0.88			6.24	0.333	2.5	2.20
0.5	12	0.03125	0.333	4.0	2.80	0.08	30	0.78	0.333	10.0	7.00
		0.0625	0.333	4.0	3.00			1.56	0.333	10.0	7.60
		0.09375	0.333	4.0	3.20			2.34	0.333	10.0	8.00
		0.125	0.333	4.0	3.28			3.12	0.333	10.0	8.20
		0.1875	0.333	4.0	3.43			4.68	0.333	10.0	8.60
		0.25	0.333	4.0	3.50			6.24	0.333	10.0	8.80
1	6	0.03125	0.333	2.0	1.24	0.16	15	0.78	0.333	5.0	3.10
		0.0625	0.333	2.0	1.33			1.56	0.333	5.0	3.32
		0.09375	0.333	2.0	1.38			2.34	0.333	5.0	3.45
		0.125	0.333	2.0	1.42			3.12	0.333	5.0	3.55
		0.1875	0.333	2.0	1.48			4.68	0.333	5.0	3.70
		0.25	0.333	2.0	1.53			6.24	0.333	5.0	3.82
1	12	0.03125	0.333	4.0	2.50	0.16	30	0.78	0.333	10.0	6.25
		0.0625	0.333	4.0	2.66			1.56	0.333	10.0	6.65
		0.09375	0.333	4.0	2.76			2.34	0.333	10.0	6.90
		0.125	0.333	4.0	2.84			3.12	0.333	10.0	7.10
		0.1872	0.333	4.0	2.97			4.68	0.333	10.0	7.42
		0.25	0.333	4.0	3.06			6.24	0.333	10.0	7.65
1.5	12	0.03125	0.333	4.0	2.27	0.24	30	0.78	0.333	10.0	5.68
		0.0625	0.333	4.0	2.44			1.56	0.333	10.0	6.10
		0.09375	0.333	4.0	2.55			2.34	0.333	10.0	6.38
		0.125	0.333	4.0	2.62			3.12	0.333	10.0	6.55
		0.1875	0.333	4.0	2.73			4.68	0.333	10.0	6.82
		0.25	0.333	4.0	2.82			6.24	0.333	10.0	7.05
2	24	0.03125	0.333	8.0	4.30	0.32	60	0.78	0.333	20.0	10.75
		0.0625	0.333	8.0	4.60			1.56	0.333	20.0	11.50
		0.09375	0.333	8.0	4.80			2.34	0.333	20.0	12.00
		0.125	0.333	8.0	4.94			3.12	0.333	20.0	12.35
		0.1875	0.333	8.0	5.15			4.68	0.333	20.0	12.88
		0.25	0.333	8.0	5.30			6.24	0.333	20.0	13.25
2.5	36	0.03125	0.333	12.0	6.15	0.40	90	0.78	0.333	30.0	15.38
		0.0625	0.333	12.0	6.60			1.56	0.333	30.0	16.50
		0.09375	0.333	12.0	6.88			2.34	0.333	30.0	17.20
		0.125	0.333	12.0	7.08			3.12	0.333	30.0	17.70
		0.1875	0.333	12.0	7.38			4.68	0.333	30.0	18.45
		0.25	0.333	12.0	7.60			6.24	0.333	30.0	19.00
3	48	0.03125	0.333	16.0	7.90	0.48	120	0.78	0.333	40.0	19.75
		0.0625	0.333	16.0	8.50			1.56	0.333	40.0	21.25
		0.09375	0.333	16.0	8.85			2.34	0.333	40.0	22.10
		0.125	0.333	16.0	9.10			3.12	0.333	40.0	22.75
		0.1875	0.333	16.0	9.50			4.68	0.333	40.0	23.75
		0.25	0.333	16.0	9.77			6.24	0.333	40.0	24.42

SPECIMEN AND LOADING FIXTURES
THE COD PROBE

Loading Grip Fixtures

The grip fixtures are designed to develop a uniform load distribution on the specimen. A typical grip arrangement desigend for a 400K testing machine having columns 16 ft high is shown in Fig. 1. The double row of bolt holes has been found desirable to prevent tearing at the bolt holes under high loads. Pin and clevice or gimbal connections are located between the grips and loading machine to aid the loading symmetry.

Buckling Restraints (Face Plates)

Rigid face plates must be affixed to CCT specimens less than 0.123 in. (3.125 mm) in thickness to suppress buckling. These are attached to the central region of the specimen in such a manner that crack growth is not impeded. Lubrication must be provided by use of some noncorrosive medium such as sheet Teflon. The clamping force should not be excessive, i.e., on the order of few pounds.

Displacement Gages for COD Measurements

Two types of gages are described for COD measurement. An absolute accuracy of 2% over the working range of the gage is required for use with the compliance methods. As will be discussed in Appendix B, COD is a function of Y/W; therefore a separate calibration curve is required for each value of Y/W.

Hole Probe

The hole probe (Fig. 2) is inserted into a No. 13 drilled hole at the midpoint of the initial notch. Figure 3 is a detail drawing with specifications. Electrical-resistances strain gages are cemented to the tension and compression surfaces of each beam leg and are connected as a Wheatstone bridge incorporating a suitable balancing resistor.

Double-Cantilever-Beam Gage

The double-cantilever-beam gage is designed to measure the opening over the span 2Y (Fig. 4). Proper construction techniques and electronic procedures are found in ASTM Standard E-399. Screw attachments of knife edges spanning the crack for a chosen interval 2Y provide its seating position.

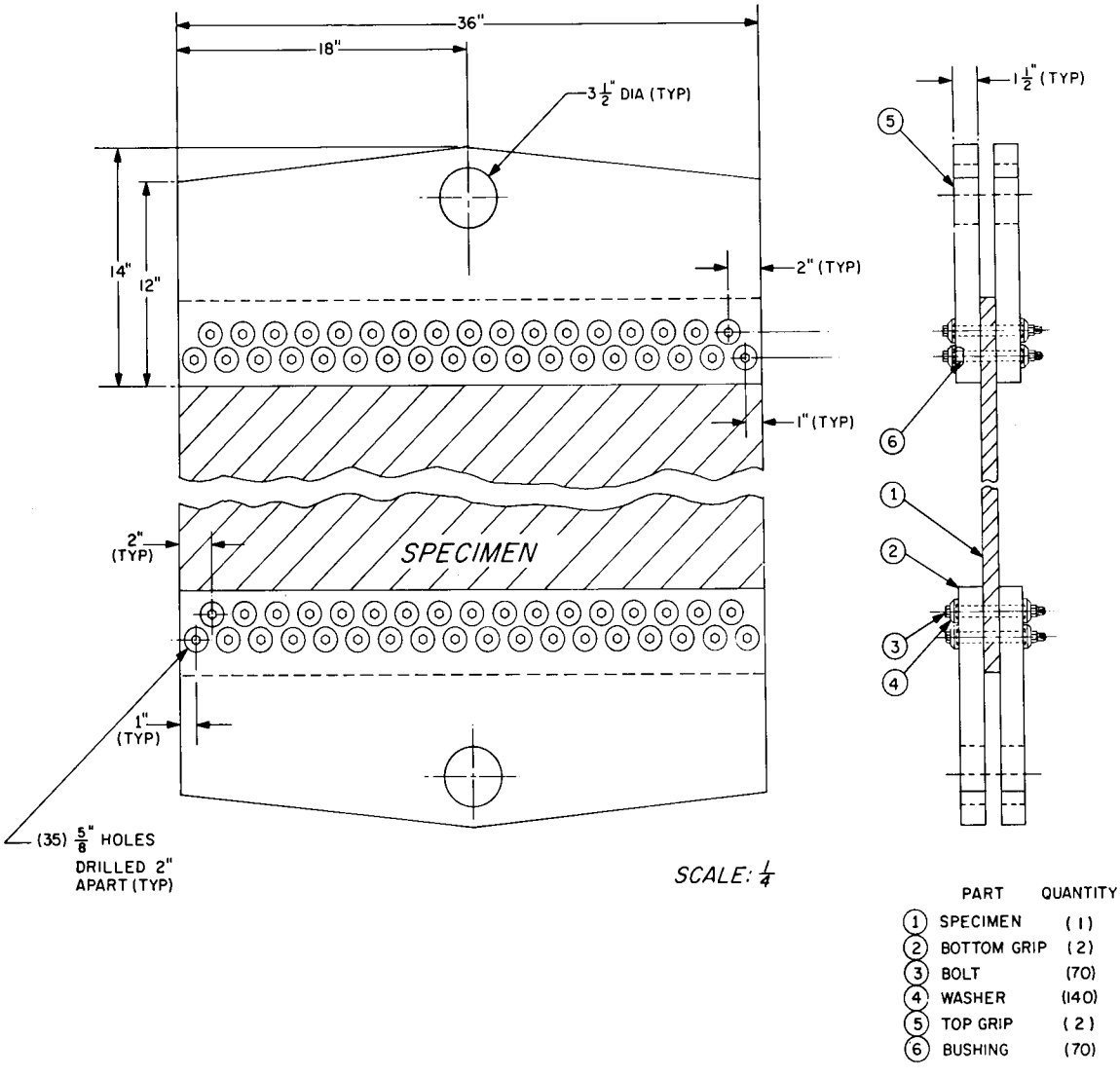

Fig. 1 — Details of the grips used for CCT specimen loading

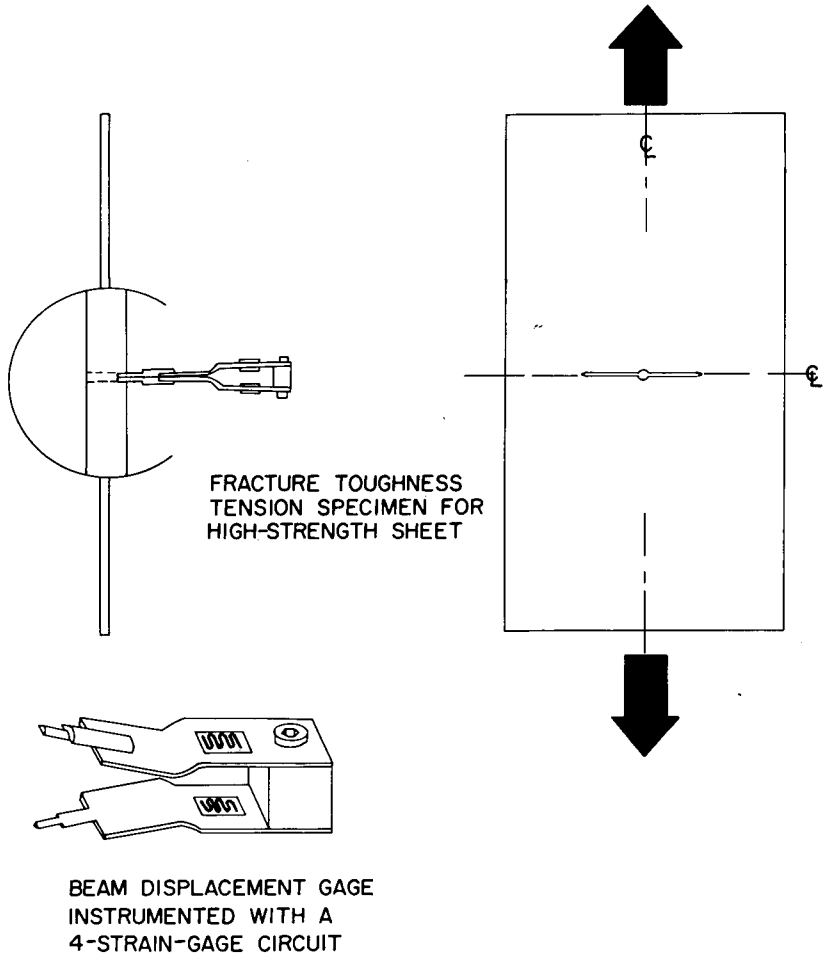

Fig. 2 — Center-cracked tensile (CCT) specimen together with the hole probe used for measurements of the center-crack-opening displacement (COD)

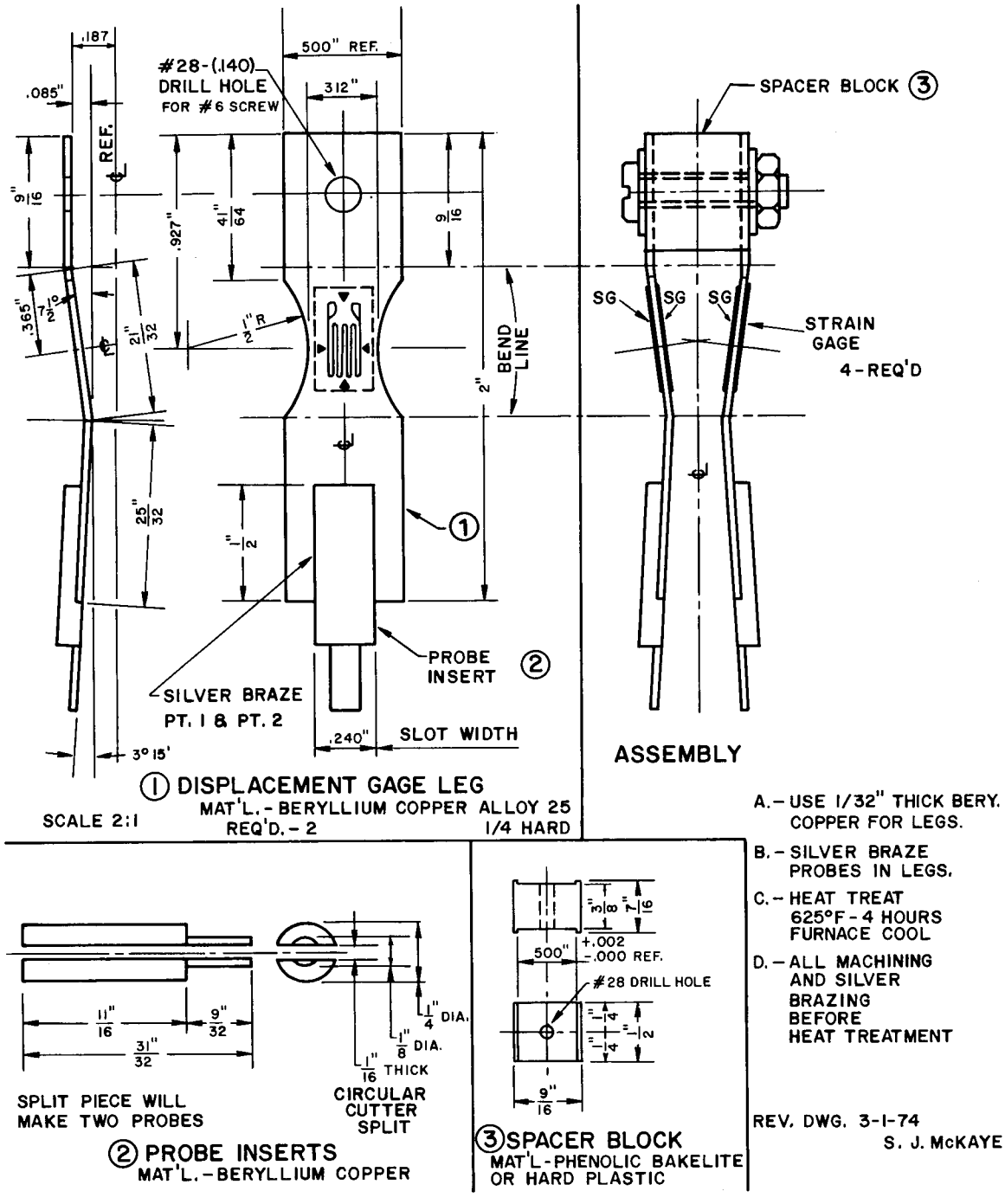

Fig. 3 — Details of the hole probe used for center-crack COD measurements

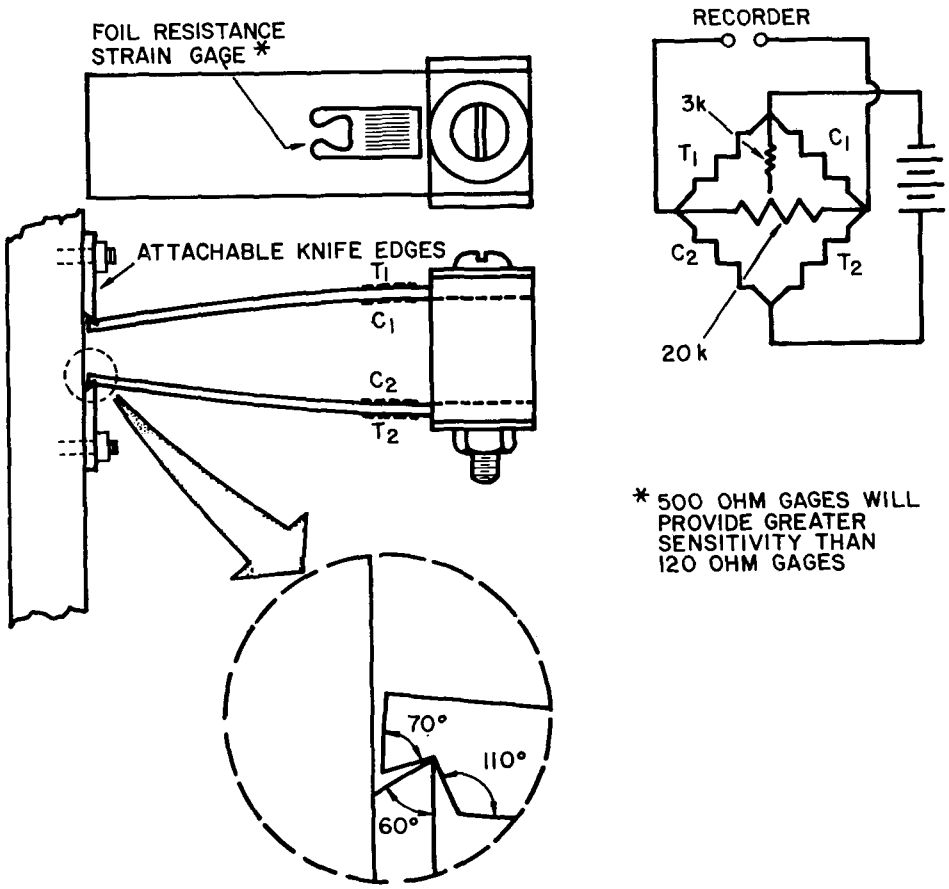

Fig. 4 — Details of the double-cantilever-beam gage and knife edges used for COD measurements

SPECIMEN TESTING PROCEDURES

The specimen, suitably prepared and satisfying the size requirements specified for appropriate values of K_c/σ_{ys}, is affixed to the loading heads in the testing machine, and the COD measurement probe is located appropriately. The specimen then is loaded to failure at a slow rate while load and COD are simultaneously graphed in an XY recorder. To set the scale on the recorder, the following calculations can be made:

1. Estimate $K_c = \left(\frac{K_c}{\sigma_{ys}}\right) \sigma_{ys}$

2. Estimate the maximum load as:

$$P = \sigma A = \sigma BW, \text{ where } \sigma = \frac{K_c}{\sqrt{\pi a_c}} \quad \text{(infinite sheet);}$$

that is,

$$P = \left(\frac{BWK_c}{\sqrt{\pi a_c}} \right)$$

Table 3 contains gross and net stress values σ and σ_n, calculated from the finite-width equation; they will generally be lower than those estimated from the infinite-sheet-equation.

3. Estimate the amount of opening (COD) as:

$$COD = \left(\frac{EB[COD]}{P} \right) \left(\frac{P}{EB} \right)$$

where the volume of EB[COD]/P is that at 2a/W = 0.333 and the load P is calculated as in item 2.

4. Set the recorder X and Y scales appropriately, leaving some margin for error, as the values calculated are only estimates.

5. Calibrate the exact probe opening, and record it on the graph prior to testing.

Table 3
Stress Requirements

K_c	W = 3, $2a_c$ = 1		W = 6, $2a_c$ = 2		W = 12, $2a_c$ = 4		W = 24, $2a_c$ = 8		W = 36, $2a_c$ = 12		W = 48, $2a_c$ = 16	
ksi$\sqrt{in.}$	σ (ksi)	σ_N (ksi)	σ (ksi)	σ_N (ksi)	σ (ksi)	σ_N (ksi)	σ (ksi)	σ_N (ksi)	σ (ksi)	σ_N (ksi)	σ (ksi)	σ_N (ksi)
50	37.0	55.5	26.2	39.3	18.5	27.8	13.1	19.6	10.7	15.9	9.2	13.8
75	55.6	83.4	39.3	59.0	27.8	41.7	19.6	29.4	16.0	24.0	13.9	20.8
100	74.2	111.3	52.4	78.6	37.0	55.5	26.2	39.3	21.4	32.1	18.5	27.8
125	92.7	139.1	65.5	98.2	46.3	69.4	32.8	49.2	26.8	40.2	23.2	34.8
150	111.2	166.8	78.6	117.9	55.6	83.4	39.3	59.0	32.1	48.2	27.8	41.7
175	129.8	194.7	91.8	137.7	64.8	97.2	45.8	68.7	37.4	56.1	32.4	48.6
200	148.3	222.4	104.8	157.2	74.2	111.3	52.4	78.6	42.8	64.2	37.1	55.6

$$K_c = \sigma \sqrt{a}\, f\, 2a/W$$

$$K_c = \sigma \sqrt{a}\, 1.907$$

$$\sigma = \frac{K_c}{1.907 \sqrt{a}}$$

$$\sigma_N = \left(\frac{W}{W - 2a} \right) \sigma$$

$$= 1.50$$

$$2a/W = 0.333$$

$$f(2a/W = 0.333) = 1.907$$

DETERMINATION OF THE K_c VALUES

Figure 5 depicts schematically two types of load-vs-displacement curves. In curve A the load rises to a certain value before crack growth commences and continues to rise as the crack grows until instability and final separation occur at the maximum load. In curve B, after the maximum load (instability point) is reached, the crack continues to grow under a constant load until final separation occurs.

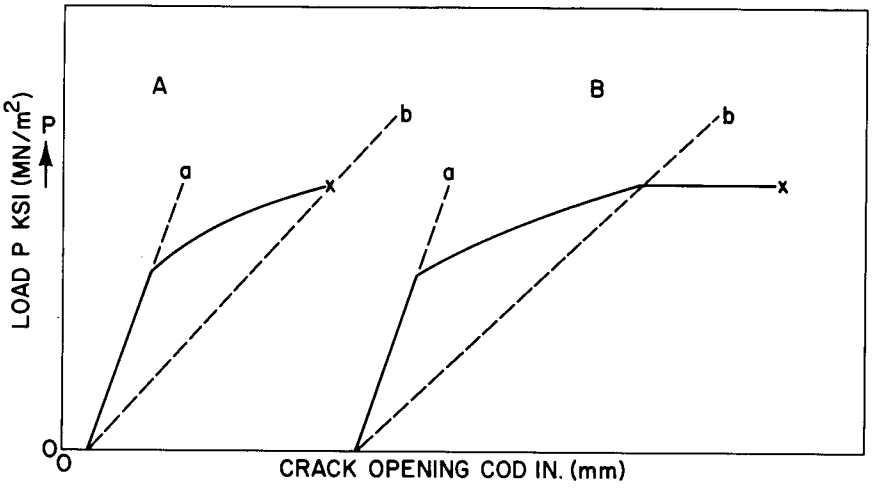

Fig. 5 — Load vs COD, showing two types of crack-growth response to the load

For K_c determination the record is analyzed in the same manner for both types of curves as follows:

1. A "best-fit" line (a) is drawn through the straight portion of the curve (Fig. 5).

2. The value of EB[COD]/P is calculated and compared with the value known for $2a_0/W$ and the difference noted. Due to minor variations of alignment, probe positioning, etc., these two values are rarely absolutely identical.

3. A secant line (b) is drawn from the origin of the "best fit" straight line (a) to the maximum load value; EB[COD]/P is calculated for this line and corrected by the amount of difference noted in item 2.

4. From the corrected value of EB[COD]/P, the value of 2a/W is read from the appropriate calibration curve.

5. Critical crack length is determined as

$$2a_c = \left(\frac{2a}{W}\right) W \cdot$$

6. Fracture resistance K_c is calculated from

$$K_c = \sigma\sqrt{a_c} f\left(\frac{2a}{W}\right),$$

where

$$\sigma = \frac{P}{BW} \text{ (gross or nominal stress)}$$

a_c = half critical crack length

$$f(2a/W) = 1.77\,[\,1 - 0.1\,(2a/W) + (2a/W)^2\,].$$

One method of easily determining the values of EB[COD]/P is the following :

1. The angles of lines a and b are measured with a drafting instrument.

2. The cotangents of the angles are read from a table of natural trigonometric functions.

3. Each cotangent value is multiplied by the value of EB[COD]/P calculated for an angle of 45° from the scale of the experimental curve.

4. The values of EB[COD]/P are corrected from the calibration curve as described in items 2 and 3 of the previously discussed record analysis.

ESTIMATE OF K_c FROM THE FRACTURE APPEARANCE

From the relationships noted between K_c and percent slant fracture observed on the fracture surface, it has been found (14) that the following equations give reasonable estimates of fracture resistance:

Steel: $$K_c = \left[740\,\frac{B_{SL}}{B}\,E\right]^{1/2}$$

Aluminum: $$K_c = \left[550\,\frac{B_{SL}}{B}\,E\right]^{1/2}$$

Titanium: $$K_c = \left[250\,\frac{B_{SL}}{B}\,E\right]^{1/2}$$

These calculations can be employed in situations where no accurate determination of K_c is possible or simply for checking purposes.

INTERPRETATION OF THE RESULTS

The fracture-resistance parameter K_c can be used in several ways as follows:

1. Within the same alloy system (having approximately the same Young's modulus E) the higher the value of K_c, the more fracture resistant the material.

2. The critical crack length can be calculated for various ratios of yield stress to operating stress as

$$2a_c = \left(\frac{K_c}{\sigma_{op}}\right) \frac{2}{\pi},$$

where σ_{op} = various percentages of σ_{ys}. These values can be plotted as σ_{op}/σ_{ys} vs $2a_c$ for comparisons between alloys.

3. When item 2 is used for design, consideration must be given to (a) potential crack growth by either fatigue, stress corrosion or corrosion fatigue; (b) limitations of proposed inspection procedures for the detection of cracks.

Appendix A

SPECIMEN SIZE REQUIREMENTS

The section on Specimen Size Requirements simply tabulates acceptable values for appropriate dimensions. This Appendix provides figures, references, and calculations for the determination of the tabulated values.

WIDTH AND LENGTH

A series of experimental determinations of K_c over the thickness range 0.032 to 0.25 in. (0.78 to 6.24 mm) was performed on eight aluminum, four titanium and four steel alloys. Tensile tests on the same materials provided values of yield stress σ_{ys}. These values, normalized as K_c/σ_{ys} and σ_{ys}/E, are plotted in Fig. A1. A curve has been drawn to enclose all these data, and σ_{ys}/E is read at selected values of K_c/σ_{ys}.

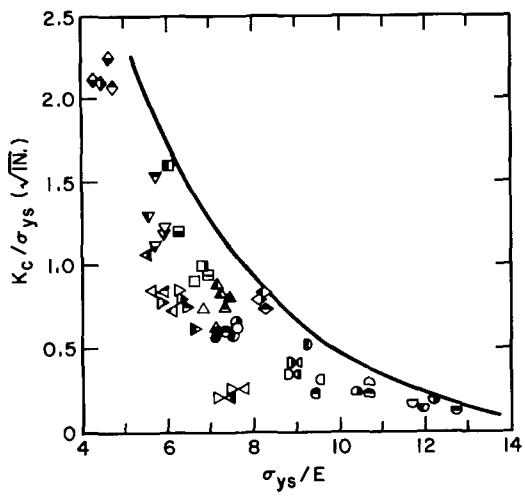

Fig. A1 — K_c/σ_{ys} vs σ_{ys}/E, for the estimation of K_c

It has been established (1,15) that the minimum specimen width requirement W_{min} can be defined by the plastic-zone size r_y:

$$r_y = \left(\frac{K_c}{\sigma_{ys}}\right)^2 \frac{1}{2\pi},$$

and

$$W_{min} = 27r_y.$$

These values were calculated for selected values of K_c/σ_{ys} and rounded off to give the width values of Table 1.

Length values are present "best estimates" to provide a uniform stress field within reasonable dimensional bounds.

INITAIL CRACK LENGTH $2a_0$

It has been concluded that a suitable value of critical crack length $2a_c$ is consistent with a ratio of $2a/W = 0.0333$.

However, the critical crack length $2a_c$ has been found to be a function of the initial crack length $2a_0$. This is discussed at length in References 13 and 14; a relationship is proposed such that

$$\left(\frac{a_0}{a_c}\right) = \frac{0.882}{\beta^{0.1026}},$$

where $\beta = (K_c/\sigma_{ys})^2/B$. Figure A2 shows the relevant data plotted in logarithmic coordinates. The calculation of $2a_0$ proceeds as follows:

1. Estimate K_c/σ_{ys} from σ_{ys}/E.
2. Determine a suitable width for the estimated K_c/σ_{ys}.
3. Calculate critical crack length $2a_c = 0.333W$, and calculate $a_c = 2a_c/2$.
4. Calculate

$$\beta = \frac{1}{B}\left(\frac{K_c}{\sigma_{ys}}\right)^2$$

5. Calculate initial crack length $2a_0$:

$$a_0 = \frac{0.882}{\beta^{0.1026}} \quad a_c \;;$$

thus

$$2a_0 = 2 \times a_0 \cdot$$

In situations where instrumentation is not available for COD measurement, this relationship can be used to compute the critical half crack length a_c, and this value then is used for the K_c calculation.

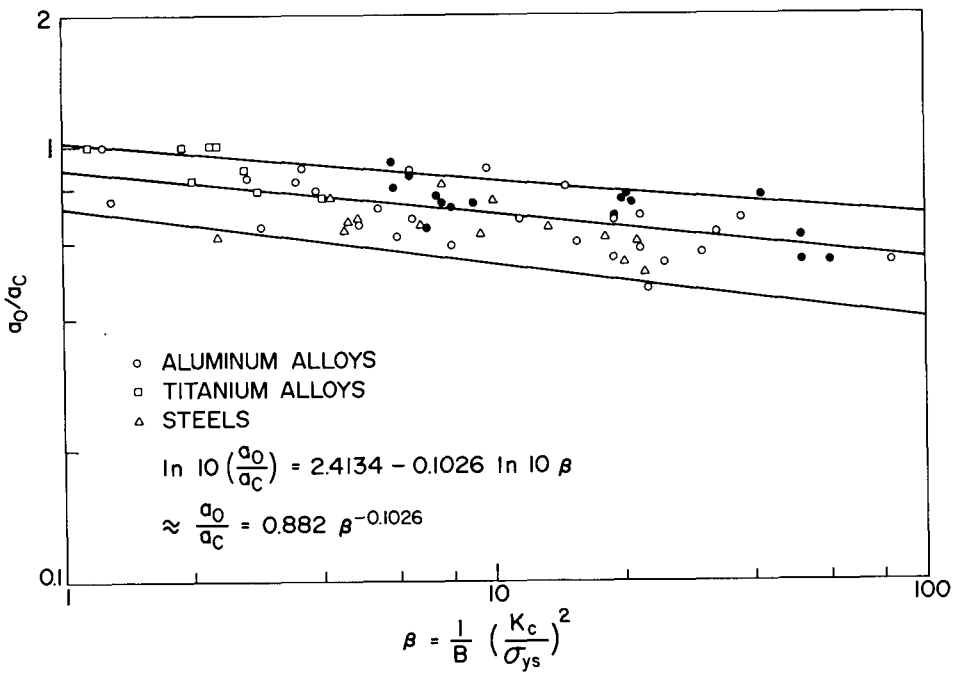

Fig. A2 — Log (a_0/a_c) vs log β, for the estimation of the critical crack length $2a_c$. (The solid circles are data for aluminum alloy 7475-T61.)

Appendix B

CALIBRATION CURVE EB[COD]/P VS 2A/W FOR THE DOUBLE-CANTILEVER-BEAM GAGE

THEORETICAL RELATIONSHIP

For determination of the critical crack length $2a_c$ at instability, a calibration curve relating EB[COD]/P to 2a/W is employed. A theoretical expression proposed for displacements at the notch center (16) is:

$$\frac{E[COD]}{\sigma W} = 2\left\{\frac{2W}{\pi Y}\cos^{-1}\left(\frac{\cosh\frac{\pi Y}{W}}{\cos\frac{\pi a}{W}}\right) - \frac{1+\nu}{\left[1+\left(\frac{\sin\frac{\pi a}{W}}{\sinh\frac{\pi Y}{W}}\right)^2\right]^{1/2}} + \nu\right\}\frac{Y}{W}.$$

Since this expression is sensitive to the ratio Y/W, Figs. B1 and B2 show calculated theoretical curves together with measured data points for some positions. It can be seen that with the narrower specimens and larger 2Y gage span, deviations from the theoretical value occur.

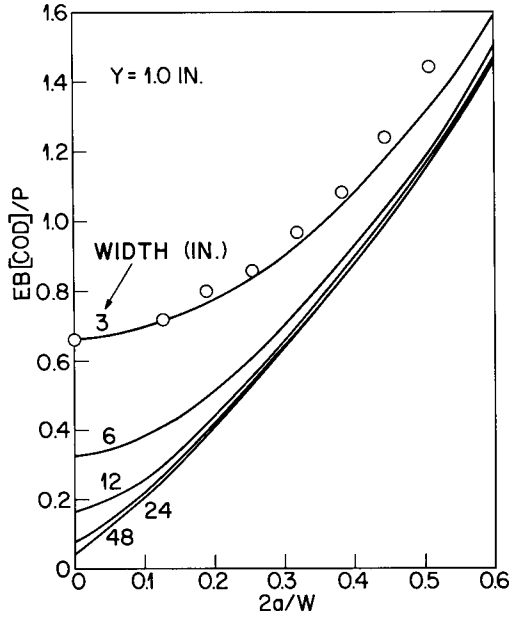

Fig. B1 — EB[COD]/P vs 2a/W, showing the effect of increased specimen width; half gage span Y = 1 in.

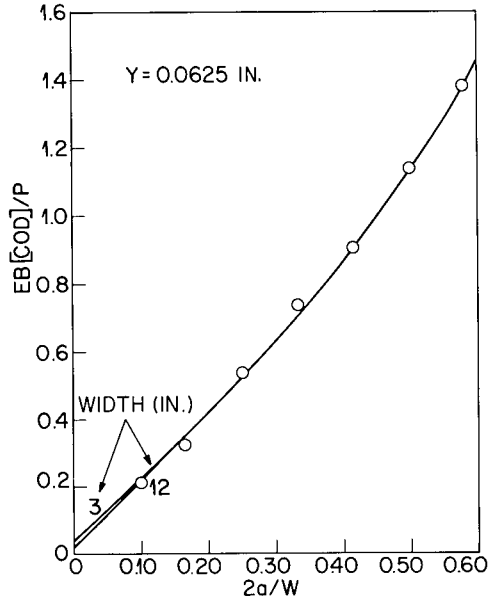

Fig. B2 — EB[COD]/P vs 2a/W, showing the effect of increased specimen width; half gage span Y = 0.0625 in.

For this reason it is mandatory to develop a calibration curve for the exact conditions of the test. Crack length determined in this manner can be considered as the effective crack length. This simplifies the computation of K_c, since no plastic-zone correction need be added to the basic equation for the evaluation of K_c.

PROCEDURE

The calibration porcedure is perfectly straight forward. A specimen size is chosen and a series of specimens prepared with crack lengths varying through a range of values of $2a_0/W$ such as 0.1, 0.2, 0.3, 0.4, 0.5, 0.6. The specimens are loaded elastically while load P and crack opening COD, measured by an appropriately chosen gage, are simultaneously graphed on an XY recorder. A minimum of two sets of three runs each should be made for each crack length with the gage removed and, repositioned between each set. Values of EB[COD]/P are averaged for each set, plotted against 2a/W, and compared with a curve calculated from the theoretical expression if desired. For determinations of critical crack length $2a_c$, the measured calibration curve must be used. Any convenient alloy is suitable for calibration, aluminum 7075-T6 having been chosen frequently. It is advisable to use material at least 0.125 in. (3.12 mm) thick so that buckling restraints will not be required. To insure elastic loading conditions without crack growth, the load can be calculated from an estimated K_{Ic} value and each

value of $2a_0/W$. A reasonable percentage of that value is chosen for the calibration load. The relevant equations are:

$$\sigma = \frac{K_{Ic}}{\sqrt{a_0} f(2a/W)}$$

and

$$P = \sigma A = \sigma BW$$

or

$$P = \frac{BWK_{Ic}}{\sqrt{a}\, f(2a/W)} .$$

For aluminum alloy 7075-T6, K_{Ic} can be considered to be 25 ksi$\sqrt{\text{in.}}$

REFERENCES

1. A.M. Sullivan and C.N. Freed, "The Influence of Geometric Variables on K_c Values for Two Thin Sheet Aluminum Alloys," NRL Report 7270, June 17, 1971.
2. C.N. Freed, A. M. Sullivan, and J. Stoop, "Comparison of Plane Stress Fracture Toughness for Three Aluminum Sheet Alloys," NRL Report 7299, Aug. 11, 1971.
3. A.M. Sullivan and C.N. Freed, "Plane Stress Fracture Resistance of One Steel Sheet and Two Titanium Sheet Alloys," NRL Report 7332, Oct. 27, 1971.
4. C.N. Freed, A.M. Sullivan, and J. Stoop, "Crack Growth Resistance Characteristics of High-Strength Sheet Alloys," NRL Report 7374, Jan. 31, 1972.
5. C.N. Freed, A.M. Sullivan, and J. Stoop, "Influence of Dimensions of Center-Cracked Tension Specimen on K_c," *Fracture Toughness*, ASTM STP 514, Sep. 1971, p. 98.
6. C.N. Freed, A.M. Sullivan, and J. Stoop, "Effect of Sheet Thickness on the Fracture Resistance K_c Parameter for Titanium Alloys," NRL Report 7464, Nov. 8, 1972.
7. A.M. Sullivan and C.N. Freed, "A Review of the Plane Stress Fracture Mechanics Parameter K_c Determined Using the Center-Cracked Tension Specimen, " NRL Report 7460, Dec. 29, 1972.
8. A.M. Sullivan, C.N. Freed, and J. Stoop, "A Comparison of R-Curves Determined from Different Specimen Types," *Fracture Toughness Evaluation by R-Curve Methods*, ASTM STP 527, Apr. 1973, p. 85.

9. A.M. Sullivan, C.N. Freed, and J. Stoop, "Effect of Thickness Variations Upon the Plane Stress Fracture Resistance Parameter K_c," in *Third International Conference on Fracture Book of Preprints*, Verein Deutscher Eisenhüttenleute, Düsseldorf, Germany, paper number II — 322 of Volume III.

10. A.M. Sullivan, J. Stoop, and C.N. Freed, "Plane Stress Fracture Resistance of High-Strength Titanium Alloy Sheet," in *Titanium Science and Technology*, R.J. Jaffee and H.M. Burte, editors, Plenum Press, New York 1973, p. 1411.

11. A.M. Sullivan, J. Stoop, and C.N. Freed, "The Influence of Sheet Thickness Upon the Fracture Resistance of Structural Aluminum Alloys," in *Progress in Crack Growth and Fracture Toughness Testing*, ASTM STP 536, Aug. 1973, p. 323.

12. A.M. Sullivan and J. Stoop, "Effect of Sheet Thickness on the Fracture Resistance K_c Parameter for Steels," NRL Report 7601, Aug. 1973.

13. A.M. Sullivan and J. Stoop, "Further Aspects of Fracture Resistance Measurement on Thin Sheet Material: Yield Stress and Crack Length," presented at the VII National Symposium on Fracture Mechanics, University of Maryland, August 1973; to be published as an ASTM STP.

14. A.M. Sullivan and J. Stoop, "Some Fracture Mechanics Relationships for Thin Sheet Materials," NRL Report 7650, Dec. 21, 1973.

15. C.E. Fedderson, "Evaluation and Prediction of the Residual Strength of Center-Cracked Tension Panels," *Damage Tolerance in Aircraft Structures*, ASTM STP 486, 1971, p. 50.

16. G.R. Irwin, "Fracture Testing of High-Strength Sheet Materials Under Conditions Appropriate for Stress Analysis," NRL Report 5486, July 27, 1960.

SYMBOLS AND CONVERSIONS

$2a$, $2a_0$, $2a_c$	Crack or notch length in a sheet; the subscript 0 refers to the initial value; the subscript c refers to the critical value.
r_y	Plastic-zone size
B	Specimen thickness
B_{SL}	Amount of slant or shear fracture
CCT	Center-crack tension specimen
COD	Crack-opening displacement at the crack center
E	Young's modulus
K_c	Fracture-resistance parameter for a plane-stress condition; the subscript c refers to the critical value.
L	Specimen length
LEFM	Linear-elastic fracture mechanics
P	Load
W	Specimen width
Y	Half span of the COD measuring gage
σ	Gross or nominal stress P/BW
σ_N	Net stress P/B (W— 2a)
σ_{ys}	Yield stress

in. × 2.5 = cm

in. × 2 5 = mm

$\sqrt{\text{in.}} \times 0.16 = \sqrt{\text{m}}$

$$\text{ksi} \times 6.895 = \text{MN/m}^2$$

$$\text{ksi}\sqrt{\text{in.}} \times 1.099 = \text{MN}\sqrt{\text{m}}/\text{m}^2 \text{ or MN m}^{-3/2}$$

$$\text{ksi}\sqrt{\text{in.}} \times 0.16 = (\text{MN}\sqrt{\text{m}}/\text{m}^2)(\text{m}^2/\text{MN})$$