NRL Report 7627

Fracture Extension Resistance of Aluminum Alloys in Thin Sections

R. W. JUDY, JR., AND C. A. GRIFFIS

Strength of Metals Branch
Metallurgy Division

October 12, 1973

NAVAL RESEARCH LABORATORY
Washington, D.C.

Approved for public release; distribution unlimited.

CONTENTS

Abstract ii

INTRODUCTION 1

BACKGROUND 1

MATERIALS AND PROCEDURES 2

DISCUSSION OF RESULTS 2

CONCLUSIONS 7

ACKNOWLEDGMENT 9

REFERENCES 9

ABSTRACT

The Dynamic Tear (DT) test was developed to characterize the fracture resistance properties of structural metals over the entire range of strength and fracture properties. Ratio Analysis Diagram (RAD) procedures based on use of the DT test have been developed as a framework for determining the significance of fracture resistance data in terms of structural design parameters. However, DT test methods have been used primarily for thick-section materials (1.0 in. and thicker); hence no standard method for measuring fracture properties of thin-section ductile materials presently exists. This report is concerned with the extension of DT test methods to include thin-section materials in the RAD analysis system. The test materials were four thin-section aluminum alloys. A technique of laminating specimens was developed to prevent specimen buckling. Methods for comparing thin-section material properties to previously established data for aluminum alloys in thicker sections on the RAD format are also discussed.

Manuscript submitted June 18, 1973.

FRACTURE EXTENSION RESISTANCE OF ALUMINUM ALLOYS IN THIN SECTIONS

INTRODUCTION

The present state of fracture technology is that the structural behavior of metals of brittle, or plane strain, properties can be predicted. Applications involving the use of materials with an appreciable degree of ductility (tough materials) in any thickness can only be accomplished by engineering methods rather than by analytical methods derived from first principles. Structural design procedures to prevent or control fracture extension (1) in ductile materials are based on correlation of basic characterizations of materials with the results of structural element tests. The key to successful application of these methods to any problem is an accurate and reliable test method to characterize the fracture resistance that is inherent to the structural metal. The Dynamic Tear (DT) test was evolved for this purpose and has been used in studies of aluminum, titanium, and steel in the section-size range of 0.3 to 6.0 in. This report presents the results of studies to develop DT test methods for characterizing the fracture resistance properties of thin-section materials in the thickness range of 0.125 to 0.50 in.

BACKGROUND

The DT test specimen (Fig. 1) is an edge-notched bar which is loaded dynamically in three-point bending by machines of pendulum or falling weight type. Test specimens are dimensioned according to material thickness; standard configurations for various thicknesses have been established (2, 3). Energy to fracture the specimen at specified loading rates and temperatures is measured in standard tests. Various analysis procedures based on DT test methods have been evolved over the past several years. These include R-curve characterizations (4 — 6) and Ratio Analysis Diagrams (RAD's) for steels, aluminum alloys, and titanium alloys (7 — 9). It must be emphasized that the DT test is intended for engineering use in providing material characterizations rather than as a tool for precise scientific investigations. For this reason every effort to simplify test procedures and to minimize test costs has been made.

In past studies (11 — 13) a relation between DT energy values and specimen cross-section dimensions has been established. The equation $E = R_p(\Delta a)^2 B^{1/2}$, where the terms are as defined in Fig. 1, has been shown to apply for steels and aluminum alloys in sections above 0.3 in. The constant R_p, which is the index of material resistance to fracture, is a geometry-independent parameter. It is important to note that the equation applies only for the plastic and elastic-plastic fracture states. The plane-strain case is best handled by linear elastic fracture mechanics. Use of the R_p parameter to measure fracture resistance allows independent analysis of mechanical constraint effects and of metallurgical effects. Extension of these methods to include thin-section metals (thickness below 0.5 in.) will provide a technique for characterizing the fracture properties of many materials.

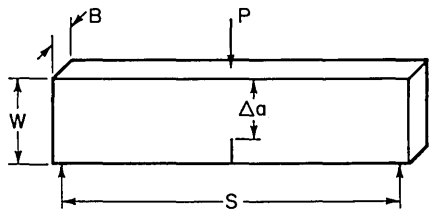

ENERGY = $R_P B^X \Delta a^Y$
WHERE R_P = CONSTANT

STANDARD SPECIMENS

B		Δa		W		S	
(IN.)	(CM)	(IN.)	(CM)	(IN.)	(CM)	(IN.)	(CM)
0.63	1.6	1.125	2.9	1.625	4.1	6.5	16.5
1.0	2.5	3	7.6	4.75	12.1	16	41

Fig. 1 — Dynamic Tear test specimen

MATERIALS AND PROCEDURES

Four aluminum alloys 1/2 in. thick were selected for the initial experiments to define geometrical effects on fracture energy for thin-section materials. The test materials were commercial aluminum alloys 7075-T6, 2024-T351, 6061-T651, and 5086-H32. The DT tests of full-section materials and reduced sections of approximately 1/4- and 1/8-in. thickness, each with a range of Δa values, were conducted at room temperature in a 289-ft-lb-capacity pendulum-type machine.

Full-thickness tests were conducted with a single specimen at each configuration. Tests involving reduced sections machined from the 1/2-in. plate were accomplished by laminating specimens (Fig. 2) to attain a stable specimen design and to increase the measured energy value. The total energy was divided by the number of laminations to give an average energy value per laminate. Complete test results and specimen dimensions are presented in Tables 1 and 2.

DISCUSSION OF RESULTS

To prove the feasibility of the method of laminating DT specimens to provide stability from buckling, DT tests were conducted of a series of specimens where only the number of plies was varied. The test material was 5086-H32 alloy in 0.128-in.-thick sheet form. Duplicate specimens with a Δa value of 1.125 in. and with 2, 3, 4, 5, and 6 plies were tested in a 289-ft-lb test machine. The test results (Fig. 3) show that the energy per ply obtained by dividing the total energy by the number of plys is a constant. The average energy value was 32.5 ft-lb per ply, with a maximum deviation of only 6% from the average. From this test it was concluded that the method of specimen lamination is a practical way to conduct DT tests of ductile materials in thin sections.

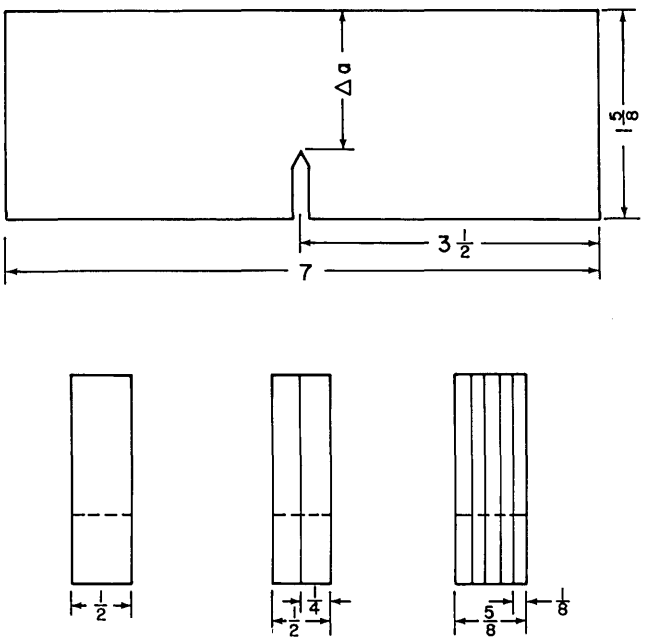

Fig. 2 — Configuration of specimens used for studies of thin-section materials

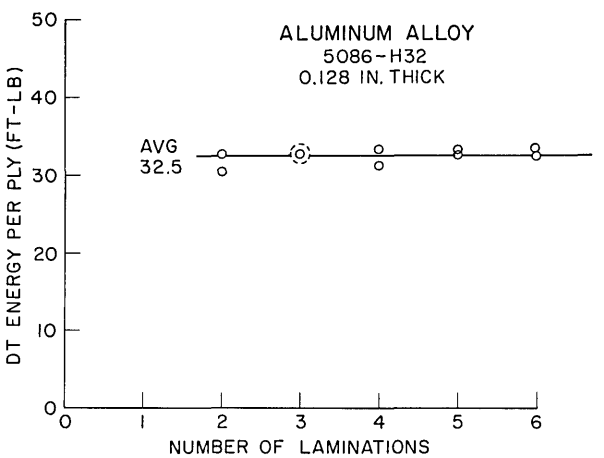

Fig. 3 — Illustration of the applicability of the specimen lamination technique for DT tests of thin-section materials

Table 1
Dynamic Tear Test Results for Four Aluminum Alloys

5086-H32			6061-T651			2024-T351			7075-T6		
B (in.)	Δa (in.)	Energy (ft-lb)	B (in.)	Δa (in.)	Energy (ft-lb)	B (in.)	Δa (in.)	Energy (ft-lb)	B (in.)	Δa (in.)	Energy (ft-lb)
0.126	0.375	6.0	0.132	0.35	4.8	0.130	0.375	3.1	0.130	0.625	1.68
	0.625	12.0		0.60	8.8		0.60	6.2		0.875	2.88
	0.750	15.8		0.875	14.4		0.875	10.8		1.125	3.46
	0.875	20.5		1.125	21.4		1.125	15.4			
	1.000	23.3									
0.260	0.375	11.8	0.257	0.50	13	0.257	0.50	8.7	0.255	0.50	2.6
	0.50	16.8		0.60	16.6		0.60	11.6		0.625	3.2
	0.625	24.5		0.75	22		0.75	17.1		0.75	3.7
	0.75	32.7		1.125	47		1.25	35.1		1.25	7.7
	1.00	47.8		1.48	65		1.50	51		1.50	11.6
	1.25	72.3									
0.49	0.75	59	0.50	0.50	14.4	0.496	0.75	26.4	0.498	0.65	6.3
	1.00	103		0.95	61.6		0.95	39.9		0.95	8.4
	1.25	149		1.15	78		1.15	51.6		1.15	10.4
	1.50	212		1.40	113		1.40	74		1.40	15.4

Table 2
Tensile Properties of
Four Aluminum Alloys

Alloy	YS (ksi)	UTS (ksi)	RA (%)	El. (%)
7075-T6	76.4	87.7	18	12
2024-T351	47.6	69.7	24	14
6061-T651	42.6	46.5	30	13
5086-H32	30.5	45.7	40	19

The measured energy values are plotted in log-log coordinates in Fig. 4 to show the conformance to exponential form. Since the data are coded by constant thickness, the slope of the straight lines is the exponent of Δa. The lines of Fig. 4 are drawn to a slope of approximately 1.6. In previous work with aluminum alloys, this exponent (slope) varied between 1.6 and 2.0. Since the test is intended for engineering use, the exponent can be rounded to 2.0, as was done for thicker sections.

The fit of all data points to the equation can be shown as follows:

1. Calculate a value of R_p for each test specimen.

2. For each material, determine the average measured values of R_p to give a characteristic value for the material.

3. Using the characteristic R_p value and specimen dimensions, calculate a predicted fracture energy for each test specimen.

4. Compare the measured energy with the predicted energy.

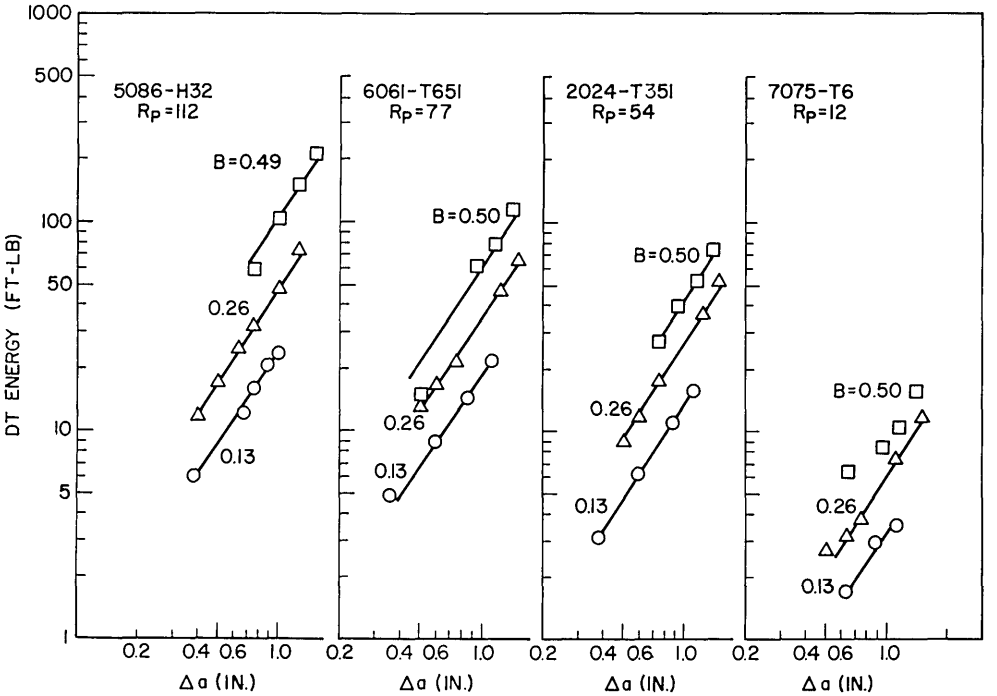

Fig. 4 — Fracture data for full-section and reduced-section tests of four aluminum alloys

Fig. 5 — Comparison of measured energy values with energy values predicted by the equation

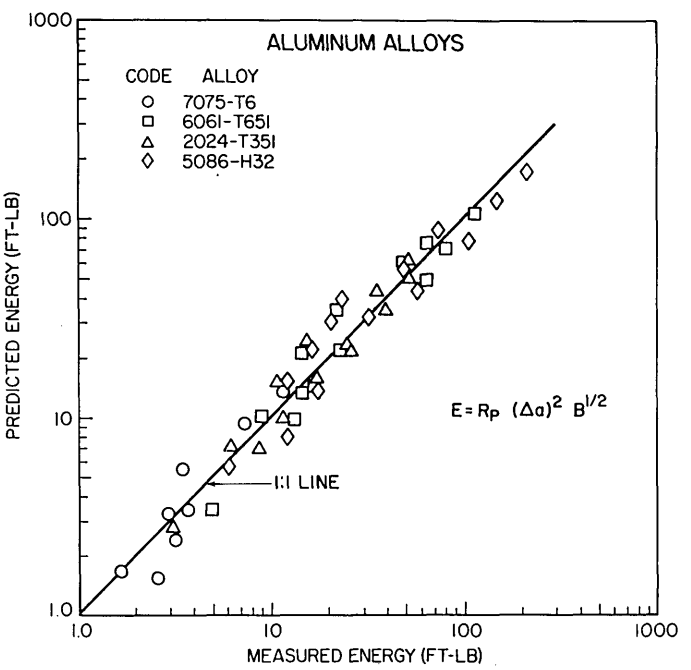

The preceding procedure was applied for all of the data; the resulting plot is Fig. 5. The conformance of the data to the 1.1 line is evidence of the applicability of the equation for characterizing the fracture properties of thin-section aluminum alloys.

The purpose of characterization tests such as DT R-curves is to provide a measure of the fracture resistance properties to be used in design. The RAD provides a format for translation of material property characterization data to predictions of structural performance for given conditions.

The RAD framework is formed from the scales of yield strength vs K_{Ic} and DT energy (Fig. 6). The most prominent features of the RAD are the limit lines and the system of lines of constant K_{Ic}/σ_{ys}. The technological-limit line represents the highest values of fracture resistance measured to date either by DT tests over the entire yield-strength range or by K_{Ic} tests in the elastic fracture range; the lower bound represents the lowest levels of fracture resistance. Reference to charts of critical flaw size (10) is provided by the system of K_{Ic}/σ_{ys} lines. As an example, critical sizes for long, thin, surface flaws for half-yield and full-yield loading conditions are shown on the RAD for each ratio line.

The ratio lines also divide the diagram into regions of expected plastic, plane-strain, and elastic-plastic behavior for given material thicknesses. The separations are determined according to thickness, as shown for the 0.5-in. section size in Fig. 6. The critical edge between plane-strain behavior and elastic-plastic behavior is the plane-strain limit. The boundary between the elastic-plastic and plastic regimes is the general-yield limit. The division of the RAD into three regions provides an engineering index of the fracture state and thereby serves to indicate the type of more detailed design approach required for each case.

Of the two entry scales to the RAD, DT energy is to be preferred to K_{Ic} for reasons of the cost of the test method. Standard DT test methods have been used to enter data on the RAD; the analysis was adjusted for material thickness from knowledge of the plane-strain limits and general-yield limits, which are given in terms of the K_{Ic}/σ_{ys} lines.

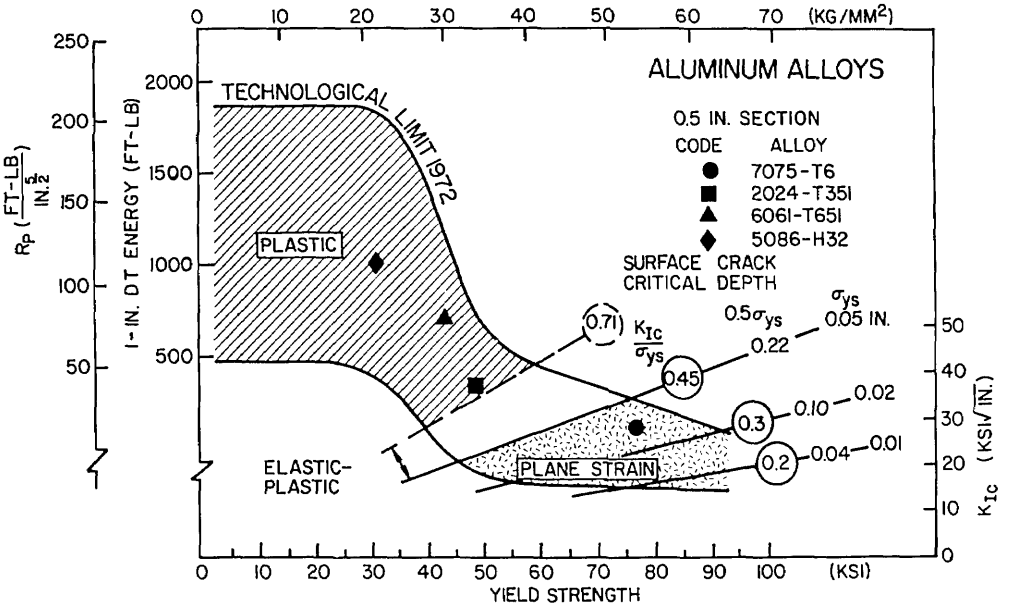

Fig. 6 — Ratio Analysis Diagram for the 0.5-in.-thick section size. The 7075-T6 alloy is in the plane-strain region at this thickness.

The ductile-fracture equation permits entry of material properties from any plate thickness onto the RAD to determine the fracture state. This is done by adding a scale of R_p as calculated from the 1-in. DT energy scale. Since R_p is independent of geometry effects, section size is the only factor used to locate the elastic-plastic region on the RAD. For example, the RAD's of Figs. 6, 7, and 8 are drawn for 0.5-in., 0.25-in., and 0.125-in. section sizes respectively, with all the data plotted on the diagram using the R_p scale.

To illustrate the value of separating metallurgical variables and mechanical-test variables, consider the data point for 7075-T6 alloy on Figs. 6, 7, and 8. Since R_p represents the physical properties of the metal, the point, as are all data points, is constant for all three RAD's. However, effects of section size are such that a different fracture state exists for the same material at each of the test thicknesses:

- At B = 0.5 in. (Fig. 6), the material has plane-strain properties, a level of fracture resistance that permits unstable crack extension at low elastic stress levels with minimal deformation at the crack tip.

- At B = 0.25 in. (Fig. 7), the material has elastic-plastic properties, which is a level of fracture resistance that allows unstable crack propagation at high elastic stress levels with an appreciable amount of crack-tip plasticity.

- At B = 0.125 in. (Fig. 8), the material has plastic properties, for which crack extension requires stresses over the yield strength and a higher energy expenditure to "drive" the crack.

Because the effect of section size is so important in determining the fracture state, a parameter for characterizing the fracture resistance properties of ductile materials independently of geometrical effects is essential to evolve a format for interpreting laboratory test results to structural design. Independent analyses of metallurgical aspects and mechanical aspects on the fracture properties of materials are made possible by the use of the R_p parameter associated with RAD analysis procedures.

This and other studies have shown that a wide range of specimen configurations can be used for characterizing the materials. Because the influence of geometry is well known, a single specimen configuration is sufficient to determine R_p. It is advantageous to use laminated specimen methods, especially for high-strength materials, because the total energy value is higher and is therefore less subject to experimental errors than are those values from tests of a single thickness and because the laminated configuration minimizes statistical variations in metal properties by averaging. For these reasons the specimen design shown in Fig. 9 is recommended for DT tests of thin-section materials.

CONCLUSIONS

The following conclusions can be drawn from the results of Dynamic Tear tests of thin-section aluminum alloys:

- The equation $E = R_p(\Delta a)^2 B^{1/2}$ accurately defines the dependence of energy measured in the Dynamic Tear test on specimen geometry for thin-section aluminum alloys. The constant R_p is a measure of the inherent resistance to fracture extension.

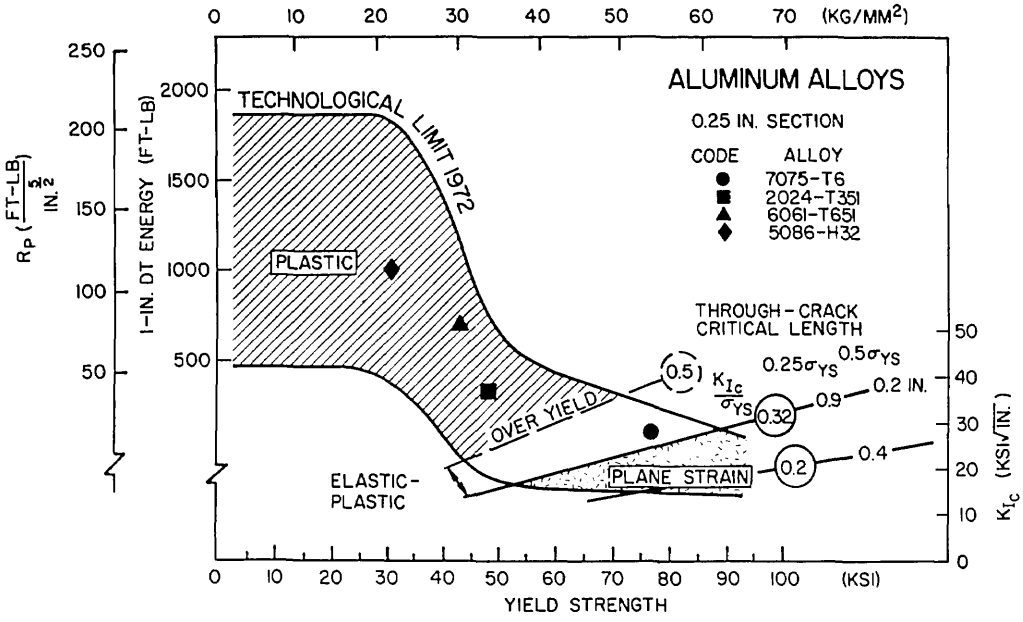

Fig. 7 — Ratio Analysis Diagram for the 0.25-in.-thick section. The 7075-T6 alloy is in the elastic-plastic region at this thickness.

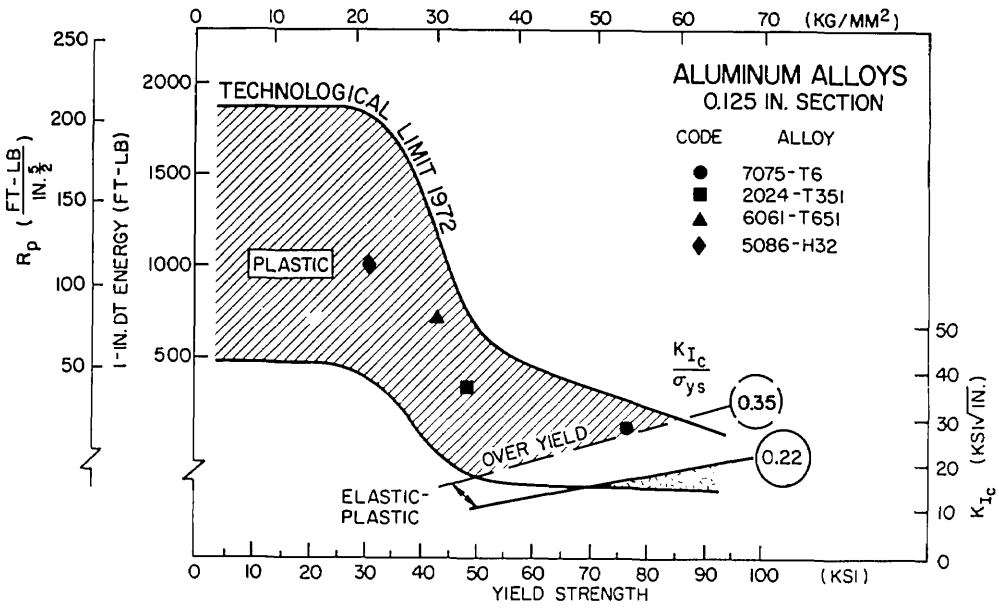

Fig. 8 — Ratio Analysis Diagram for the 0.125-in.-thick section. The 7075-T6 alloy is in the plastic region at this thickness.

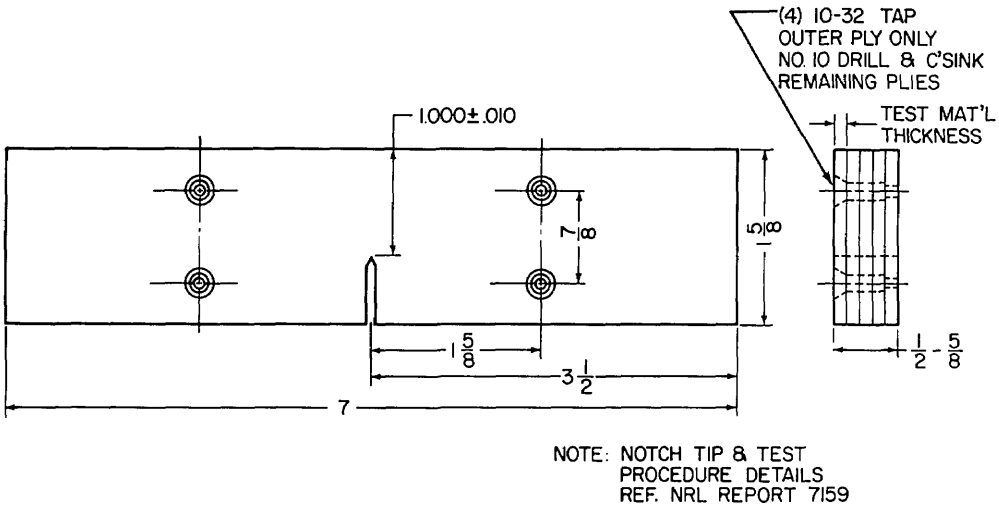

Fig. 9 — Recommended standard specimen configuration for DT tests of thin-section materials

- Ratio Analysis Diagram procedures can be used to predict the structural performance of thin-section materials.
- Use of DT type fracture test specimens similar to the standard 5/8-in. DT test configuration are recommended for thin-section materials.

ACKNOWLEDGMENT

The authors express their appreciation to the Chief of Naval Material for providing the financial support for the research studies of this report.

REFERENCES

1. R. W. Judy, Jr., "Review of Principles for Assurance of Structural Integrity," NRL Memorandum Report 2501, Sept. 1972.

2. E. A. Lange, P. P. Puzak, and L. A. Cooley, "Standard Method for the 5/8-Inch Dynamic Tear Test," NRL Report 7159, Aug. 27, 1970.

3. P. P. Puzak and E. A. Lange, "Standard Method for the 1-Inch Dynamic Tear Test," NRL Report 6851, Feb. 13, 1969.

4. W. S. Pellini and R. W Judy, Jr., "Significance of Fracture Extension Resistance (R-Curve) Factors in Fracture-Safe Design for Nonfrangible Metals," Welding Research Council Bulletin 157 (1970) and NRL Report 7187, Oct. 19, 1970.

5. R. J. Goode and R. W. Judy, Jr., "Fracture Extension Resistance (R-Curve) Features of Nonfrangible Aluminum Alloys," NRL Report 7262, June 11, 1971.

6. R. W. Judy, Jr. and R. J. Goode, "Fracture Extension Resistance (R Curve) Concepts for Fracture-Safe Design with Nonfrangible Titanium Alloys," NRL Report 7313, Aug. 16, 1971.

7. W. S. Pellini, "Advances in Fracture Toughness Characterization Procedures and in Quantitative Interpretations to Fracture-Safe Design for Structural Steels," Welding Research Council Bulletin 130, May 1968, and NRL Report 6713, Apr. 3, 1968.

8. R. W. Judy, Jr., R. J. Goode, and C. N. Freed, "Fracture Toughness Characterization Procedures and Interpretations to Fracture Safe Design for Structural Aluminum Alloys," NRL Report 6871, Mar. 31, 1969, and Welding Research Council Bulletin 140, May 1969.

9. R. J. Goode, R. W. Judy, Jr., and R. W. Huber, "Procedures for Fracture Toughness Characterization and Interpretations to Failure-Safe Design for Structural Titanium Alloys," Welding Research Council Bulletin 134, Oct. 1968, and NRL Report 6779, Dec. 5, 1968.

10. W. S. Pellini, "Criteria for Fracture Control Plans," NRL Report 7406, May 11, 1972.

11. R. W. Judy, Jr. and R. J. Goode, "Fracture Extension Resistance (R-Curve) Characteristics for Three High-Strength Steels," NRL Report 7361, Dec. 30, 1971.

12. R. W. Judy, Jr. and R. J. Goode, "Dynamic Tear Tests of Three-Inch Thick Aluminum Alloys," NRL Report 7538, Jan. 29, 1973.

13. R. W. Judy, Jr. and R. J. Goode, "Fracture Extension Resistance (R-Curve) Characterization and Analysis Procedures for Plastic Fracture of High Strength Structural Metals," publication pending.

☆ U. S. GOVERNMENT PRINTING OFFICE : 1973—542-167/Z-139

Security Classification

DOCUMENT CONTROL DATA - R & D

(Security classification of title, body of abstract and indexing annotation must be entered when the overall report is classified)

1. ORIGINATING ACTIVITY *(Corporate author)* Naval Research Laboratory Washington, D.C. 20375	2a. REPORT SECURITY CLASSIFICATION Unclassified 2b. GROUP

3. REPORT TITLE

FRACTURE EXTENSION RESISTANCE OF ALUMINUM ALLOYS IN THIN SECTIONS

4. DESCRIPTIVE NOTES *(Type of report and inclusive dates)*
Final report on one phase of a continuing NRL problem.

5. AUTHOR(S) *(First name, middle initial, last name)*

R. W. Judy, Jr., and C. A. Griffis

6. REPORT DATE October 12, 1973	7a. TOTAL NO. OF PAGES 14	7b. NO. OF REFS 13
8a. CONTRACT OR GRANT NO. NRL Problem M01-30 b. PROJECT NO. c. 62755N-ZF54-544-002 d.	9a. ORIGINATOR'S REPORT NUMBER(S) NRL REPORT 7627 9b. OTHER REPORT NO(S) *(Any other numbers that may be assigned this report)*	

10. DISTRIBUTION STATEMENT
Approved for public release; distribution unlimited.

11. SUPPLEMENTARY NOTES	12. SPONSORING MILITARY ACTIVITY Chief of Naval Material Department of the Navy Washington, D. C. 20360

13. ABSTRACT

The Dynamic Tear (DT) test was developed to characterize the fracture resistance properties of structural metals over the entire range of strength and fracture properties. Ratio Analysis Diagram (RAD) procedures based on use of the DT test have been developed as a framework for determining the significance of fracture resistance data in terms of structural design parameters. However, DT test methods have been used primarily for thick-section materials (1.0 in. and thicker); hence no standard method for measuring fracture properties of thin-section ductile materials presently exists. This report is concerned with the extension of DT test methods to include thin-section materials in the RAD analysis system. The test materials were four thin-section aluminum alloys. A technique of laminating specimens was developed to prevent specimen buckling. Methods for comparing thin-section material properties to previously established data for aluminum alloys in thicker sections on the RAD format are also discussed.

DD FORM 1 NOV 65 1473 (PAGE 1)

S/N 0101-807-6801

Security Classification

14. KEY WORDS	LINK A ROLE	LINK A WT	LINK B ROLE	LINK B WT	LINK C ROLE	LINK C WT
Dynamic Tear test						
Ratio Analysis Diagram						
Aluminum alloys						
Fracture						

DD FORM 1 NOV 65 1473 (BACK)
(PAGE 2)