NRL Report 7633

Retrieval Program for Archival Nansen-Cast Data

B. G. ROBERTS, JR.

Large Aperture Systems Branch
Acoustics Division

October 25, 1973

NAVAL RESEARCH LABORATORY
Washington, D.C.

Approved for public release; distribution unlimited.

CONTENTS

Abstract ii

INTRODUCTION 1

RETRIEVAL MODES 4

1. Track Mode 4
2. Rectangular-Area Mode 6
3. Individual-Marsden-Square-Number Mode 7
4. "Bull's-Eye" Mode 7
5. "Bull's-Eye" Mode with Marsden-Square Input 7

OUTPUT OPTIONS 7

1. Printplot 7
2. Magnetic Tape Recording 9
3. Punched Cards 9

INPUT CARD DECK SETUPS FOR SEARCHSF 9

SAMPLE RETRIEVAL CASES 18

SAMPLE OUTPUTS 19

SPECIAL PROGRAM REQUIREMENTS 19

REFERENCES 28

ABSTRACT

A program has been written in Fortran and Compass for the retrieval of environmental data from a compacted version of the National Oceanographic Data Center tapes. The tape file currently contains the results of approximately 361,000 Nansen casts. Each cast (or station) has such data as sound speed, temperature, and salinity recorded at various depths. The information retrieval program has five modes of operation to serve a variety of user needs. This report includes a complete description of the program, explains the five modes, and gives examples of each.

Manuscript submitted July 9, 1973

RETRIEVAL PROGRAM FOR ARCHIVAL NANSEN-CAST DATA

INTRODUCTION

The advent of the large computer has been accompanied with the problem of accessing selected data points in a large data bank. Such a bank might consist of data that spans a long time period, covers an extensive field of information, and is stored on a variety of devices that might include cards, magnetic tapes, disk files, and drums. Those who need data from such large systems must develop efficient programs of storage and retrieval so that they can quickly extract the particular kind of information they require.

An example of a data bank is the collection of Nansen cast tapes at the National Oceanographic Data Center (NODC). The original series of tapes contained about 350,000 Nansen stations and was stored on four reels of tape [1]. The second edition of tapes contains approximately 361,000 stations. Each data entry or station contains the depths, which consist of observed and interpolated or "standard depths" (in meters), temperatures (C°), salinities (parts/1000), and the sound speeds (m/sec.). There are other variables, i.e., water depth, which are also packed with each station, but only the above quantities are available to the retrieval program. Since the temperature, salinity, and sound speed are functions of depth, these data as taken on a particular cast are often referred to as profiles.

A computer program, SEARCHSF (Search Sound-Speed File), written in Fortran, was developed to retrieve the above quantities and put them into an acceptable format for input into acoustical ray-trace programs. The correct sound-speed profiles are very essential for use in such programs. The basic concept for SEARCHSF originated at Hudson Laboratories [2]. A profile sorting scheme and random access capability were added, and the Marsden square routine was written and tested. The data-tape-retrieval portion of the program was written in COMPASS, an assembly language of Control Data Corporation (CDC), by Dr. Walter E. Yergen of NODC [3]. The final result is a data-retrieval program with a wide range of applications.

The unit of global area identification for most environmental data is the Marsden square, which is 10° on a side. The earth is divided initially into such squares, starting at the Greenwich Meridian and the equator. Figure 1 illustrates the 10°-Marsden-squares system. The Marsden squares beyond 80° south latitude on up to 90° are not shown. These range in value from 588 to 623 corresponding to those southernmost 36 squares, 80° to 90°. The 10° squares are subdivided into 100 1° squares. Figure 2 illustrates the construction of 1° squares around the Greenwich Meridian, and Fig. 3 shows the 1° squares around 180° longitude.

As an example of 1° square nomenclature, number 12 in 10° square 148 would be designated 14812 and would identify a station at 41° 35′N latitude, 32° 49′W longitude.

The stations are placed on the NODC tapes in order of increasing Marsden-square number from 1 to 936, rather than in increasing order of latitude or longitude. They are

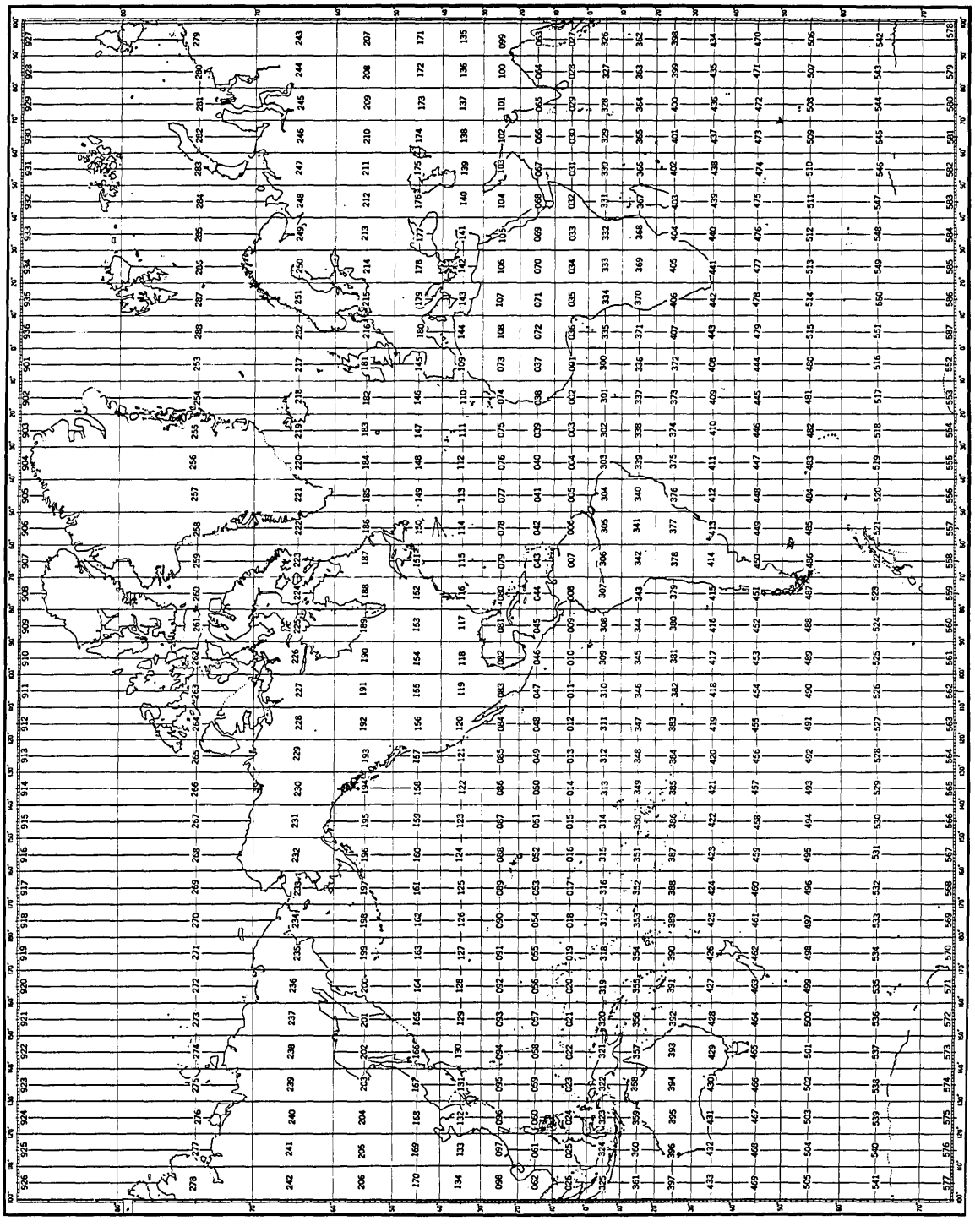

Fig. 1 — 10° Marsden squares

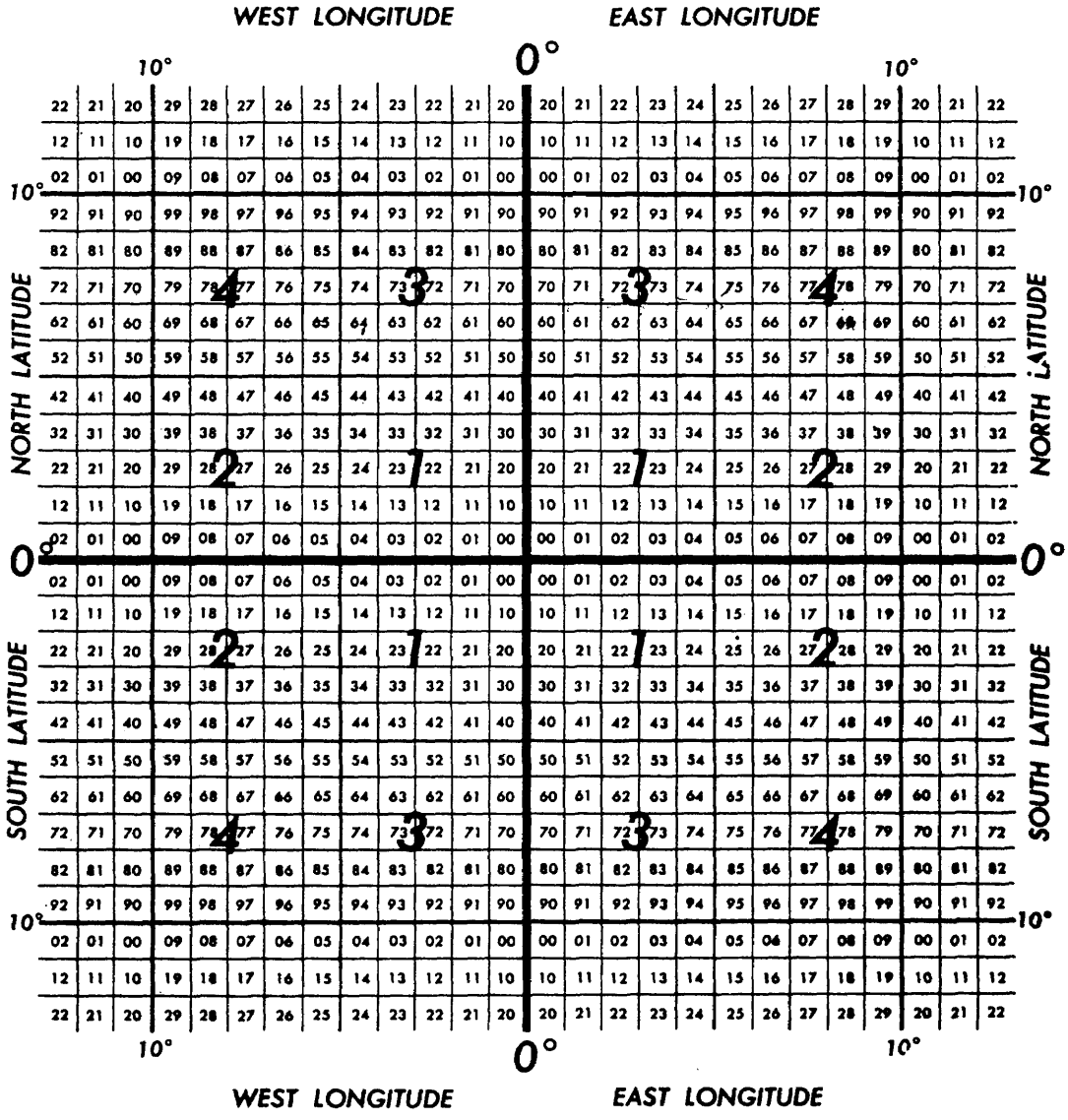

Fig. 2 — One-degree divisions of Marsden squares

EAST LONGITUDE WEST LONGITUDE

170° 180° 170°

29	20	21	22	23	24	25	26	27	28	29	29	28	27	26	25	24	23	22	21	20	29
19	10	11	12	13	14	15	16	17	18	19	19	18	17	16	15	14	13	12	11	10	19
09	00	01	02	03	04	05	06	07	08	09	09	08	07	06	05	04	03	02	01	00	09
99	90	91	92	93	94	95	96	97	98	99	99	98	97	96	95	94	93	92	91	90	99
89	80	81	82	83	84	85	86	87	88	89	89	88	87	86	85	84	83	82	81	80	89
79	70	71	72	73	74	75	76	77	78	79	79	78	77	76	75	74	73	72	71	70	79
69	60	61	62	63	64	65	66	67	68	69	69	68	67	66	65	64	63	62	61	60	69
59	50	51	52	53	54	55	56	57	58	59	59	58	57	56	55	54	53	52	51	50	59
49	40	41	42	43	44	45	46	47	48	49	49	48	47	46	45	44	43	42	41	40	49
39	30	31	32	33	34	35	36	37	38	39	39	38	37	36	35	34	33	32	31	30	39
29	20	21	22	23	24	25	26	27	28	29	29	28	27	26	25	24	23	22	21	20	29
19	10	11	12	13	14	15	16	17	18	19	19	18	17	16	15	14	13	12	11	10	19
09	00	01	02	03	04	05	06	07	08	09	09	08	07	06	05	04	03	02	01	00	09
09	00	01	02	03	04	05	06	07	08	09	09	08	07	06	05	04	03	02	01	00	09
19	10	11	12	13	14	15	16	17	18	19	19	18	17	16	15	14	13	12	11	10	19
29	20	21	22	23	24	25	26	27	28	29	29	28	27	26	25	24	23	22	21	20	29

10° NORTH LATITUDE 0° SOUTH LAT.

10° NORTH LATITUDE 0° SOUTH LAT.

170° 180° 170°

Fig. 3 — Marsden squares around 180° longitude at the equator

packed by 10° squares and then within each of these by 1° squares 0 to 99 and by months. The squares in the northern hemisphere occupy three tapes and a portion of the fourth; this indicates that there are not too many observations of the southern hemisphere available. The first tape contains Marsden numbers 00100 to 12844, including the month of May in 12844. The second tape starts at 12844, May, and continues to 16608, August. The third tape starts at 16608, August, and includes through 25206, July. The fourth tape starts at 25206, July, and goes through 93699, September.

RETRIEVAL MODES

The retrieval program has five chief modes of accessing data from the data bank. These are (1) track, (2) rectangular area, (3) individual Marsden-square number, (4) "bulls-eye," and (5) "bulls-eye" with Marsden square input.

1. Track Mode

The track mode is used to access data along a desired track such as the course of a ship or aircraft. The desired data can be specified and accessed in the following three ways:

- By two points. The starting and ending points of the track, each identified by latitude and longitude, are given. This method can be represented as follows:

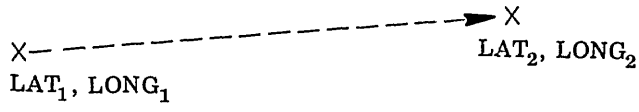

• By point bearing input. The point of origin, the starting bearing, and the track distance are specified. This method can be diagramed as follows:

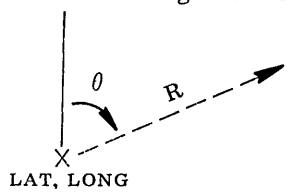

• By point-extended input. The latitude and longitude are given for a starting point and for a second point that establishes the direction of the track; then the distance one wishes this track extended along the great circle route is indicated. This variation can be represented as follows:

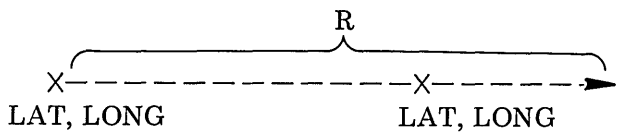

To retrieve the precise information desired, the user should also specify the following: The months of interest, the swath radius (the desired distance in nautical miles or kilometers on either side of the track), the minimum cast depth, and the earliest date for which data should be accepted.

The program, in the track mode, performs the following operations sequentially:

A. Computes the great circle distance (nautical miles or kilometers) between the starting and ending points in specified increments, and tabulates the data;

B. Computes great circle tracks on either side of the initial track at the specified swath distance;

C. Selects the Marsden numbers along the tracks;

D. Sorts the Marsden numbers in an increasing order and discards redundant squares;

E. Sorts the Marsden numbers into sequences which are acceptable to the tape retrieval segments;

F. Selects the desired tape from the four in the data bank;

G. Searches for the first station that meets both the Marsden number and the months specified;

H. Reads in the coordinates of the accepted station, and if the final observed depth is greater than the minimum acceptable depth as specified, and if the date is not earlier than the year the data were taken (specified on the input card), the program will accept the profile;

I. Then computes the great circle distances from the origin to this station and from the track to this station and stores them in two arrays. Each profile receives an assigned relative disk address and is written on a magnetic disk file for random access.

J. Sorts the ranges and puts them in an increasing order. If there is a duplication in range to origin, the profiles are sorted by distance from the track and thus put in increasing order. The profiles are then randomly retrieved from the disk file and placed into core memory one at a time. A generalized flow chart of this process is presented in Fig. 4.

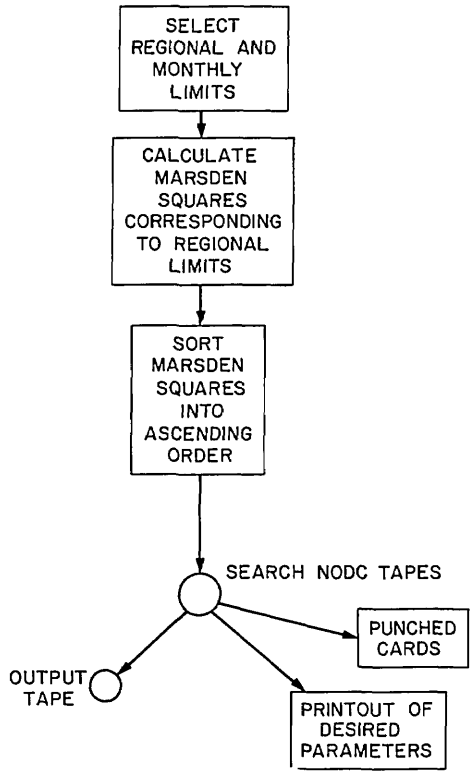

Fig. 4 — Retrieval flow chart for Modes 1, 2, and 4

2. Rectangular-Area Mode

The rectangular-area mode retrieves all profiles which exist within a rectangular area defined by latitude and longitude and then accepts all the profiles which meet the monthly, depth, and year requirements within the Marsden squares included in the area. The input for this mode includes a starting and final latitude and a starting and final longitude, which can be represented as follows:

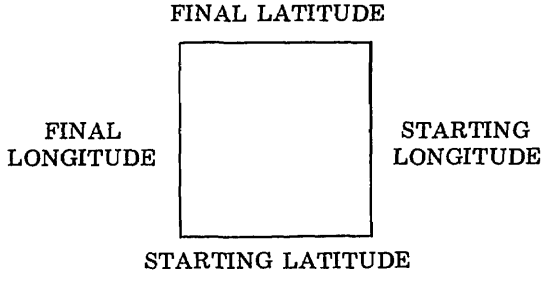

The months of interest must also be specified. The program computes the Marsden squares within the rectangular area, arranges them into sequences, and goes through the computation sequence as discussed under Mode 1, except that no great-circle calculations are made.

3. Individual-Marsden-Square-Number Mode

The third mode is for the user who wants to abstract only by squares and specifies the Marsden-square numbers, in sequence.

4. "Bull's-Eye" Mode

When the "bull's-eye" mode is used, the computer abstracts all the profiles within a specified radial distance (in nautical miles or kilometers) of a given point of origin. Accordingly, Mode 4 provides a circular or bull's-eye type of area coverage. The Marsden squares included within the designated circle are calculated, and the profiles are abstracted from all these squares. This mode differs from the previous mode in that here the great circle distances from the origin to each station are computed and the profiles are placed in order of increasing range from the origin; then if the range is greater than the specified radius, the profile is rejected.

5. "Bull's-Eye" Mode with Marsden-Square Input

In this variation of Mode 4 the latitude and longitude of the origin and the surrounding Marsden squares are specified.

OUTPUT OPTIONS

The output in response to the various input requests is produced in three forms, either a printplot, a recording on magnetic tape, or a punched card. Each of these forms is discussed below.

1. Printplot

Figure 5 is an example of a printplot. In the profiles, V denotes sound speed (velocity), T represents temperature, and S represents salinity. Here are explanations of the headings across the top of the printplot:

INDX — Index number of the tape (1, 2, 3, or 4).

SE — Season, a number code associated with the monthly sequences called for. Thus, if one had two sequences of months, 2 to 4 and 5 to 6, and a profile was retrieved from months 2 to 4, then SE = 1.

MSQR — 10°-Marsden-square number (three digits).

DEG — 1°-Marsden-square number (two digits).

MON — Month in which this profile was taken.

LAT H — Latitude in degrees and minutes and compass quadrant.

LON H — Longitude in degrees and minutes and compass quadrant.

DATE — Date the data were taken.

TIME — Greenwich mean time the data were taken.

IDENTIFICATION NO.= 4

DINDX	SE	MSQR	DEG	MON	LAT H	LON H	DATE	TIME	NO.OF PTS.	RANGE (NM)	D.TE.RAY P	CTR SW	REF	CSC
1	2	114	62	8	36 55 N	52 41 W	8/15/1931	8.0	39	250	21	31 AT	302	29

DEPTH	TEMP	SALIN	VELOCITY 1470M	1480	1490	1500	1510	1520	1530	1540	1550	1560	1570
			TP 0	4	8	12	16	20	24	28	32	36	40
			S 30	30.8	31.6	32.4	33.2	34.0	34.8	35.6	36.4	37.2	38.0
0	26.10	36.42	1539.00										
10	25.19	36.45	1537.10										
20	24.32	36.47	1535.20										
30	23.49	36.48	1533.40										
50	21.98	36.51	1529.90										
75	20.26	36.51	1525.80										
100	18.98	36.51	1522.70										
125	18.74	36.50	1522.40										
150	18.53	36.50	1522.30										
199	18.19	36.49	1522.10										
200	18.19	36.49	1522.10										
250	17.98	36.49	1522.30										
296	17.85	36.49	1522.70										
300	17.85	36.49	1522.80										
395	17.73	36.45	1523.90										
400	17.70	36.45	1523.90										
500	17.19	36.42	1524.00										
593	16.71	36.29	1524.00										
600	16.56	36.26	1523.60										
700	14.55	35.92	1518.60										
791	12.87	35.66	1514.20										
800	12.71	35.64	1513.80										
900	11.05	35.44	1509.50										
988	9.72	35.29	1506.00										
1000	9.54	35.28	1505.50										
1100	8.16	35.22	1502.00										
1200	6.96	35.16	1498.90										
1300	5.94	35.11	1496.50										
1400	5.11	35.07	1494.80										
1460	4.69	35.05	1494.00										
1500	4.60	35.04	1494.30										
1750	4.07	34.99	1496.30										
1949	3.74	34.97	1498.20										
2000	3.71	34.97	1499.00										
2500	3.44	34.96	1506.30										
2925	3.17	34.95	1512.50										
3000	3.12	34.95	1513.60										
3414	2.83	34.96	1519.60										
3902	2.49	34.94	1526.70										

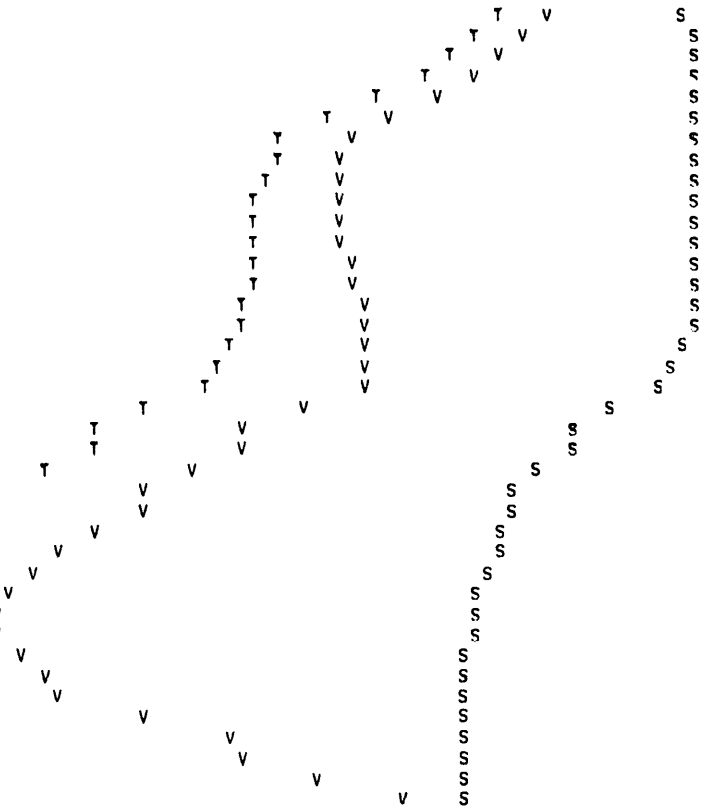

Fig. 5 — D, T, S, V plot

NO. OF POINTS — Number of points in a profile. If standard depths were requested, this represents the number of standard depths only.

RANGE — Range from the origin to the point where a profile was taken.

D. TO RAY P — Distance to the great circle track from the location of the profile.

CTR — Number code for country [4]; tells which nation took the data.

SH — Ship code [4]; tells which ship took the data.

REF — Internal NODC number to identify the cruise.

By a suboption, illustrated in Fig. 6, the plot can be limited to the sound speed versus depth only. An asterisk represents the sound-speed values at the specified depths. If any of the parameter values exceed the print page width, the value is printed but not plotted.

The printplot is a convenient way to display tabular data and is inexpensive, since the cost per page is small and the user is charged by the line, not by the number of characters. The printplot also affords the user an opportunity to review data quickly prior to making selections for other programs.

2. Magnetic Tape Recording

The magnetic tape output contains an identification number in front of each profile so the user will be able to select only the profiles he needs. Such selection requires a separate processing program, which is being prepared.

An index to the profiles extracted is generated for each of the output options. This consists of the range to the profile site from the origin, the distance to the profile site from the track, the 10°-Marsden-square number, 1°-square number, latitude and longitude of profile, maximum depth, number of points in a profile, disk address, and identification number. The indexes for Modes 2 and 3 do not have the two distance calculations or the disk address.

3. Punched Cards

A punched card output is also available.

INPUT CARD DECK SETUPS FOR SEARCHSF

This section gives information concerning setups of punched card decks to run SEARCHSF programs. Figure 7 is a CDC FORTRAN coding form illustrating a sample card deck setup for such a program. Figure 8 shows two data deck input formats representing generalized data inputs. Filled-in FORTRAN coding forms showing sample case decks are illustrated in Fig. 9. This figure covers all the five modes and the two variations of Mode 1 that are available for accessing information.

The glossary that follows explains the input data deck codes and parameters that are used on Fig. 8.

IDENTIFICATION NO.= 1

DINDX	SE	MSQR	DEG	MON	LAT	H	LON	H	DATE	TIME	NO.OF PTS.	RANGE (NM)	D.TO.RAY P	CTR SH	REF	CSC
1	1	88	51	7	25	0 N	121	0 W	7/ 3/1964	8.0	22	0	0	31 TC	1193	207

J	DEPTH	VELOCITY 1470M
1	0	1532.000
2	10	1532.200
3	20	1532.300
4	30	1532.200
5	50	1531.200
6	75	1528.600
7	100	1527.500
8	125	1527.100
9	150	1524.800
10	200	1518.900
11	250	1508.800
12	300	1501.200
13	400	1490.700
14	500	1484.500
15	600	1481.300
16	700	1481.000
17	800	1481.200
18	900	1482.000
19	1000	1482.600
20	1100	1482.900
21	1200	1483.400
22	1300	1484.100
	1389	1484.900

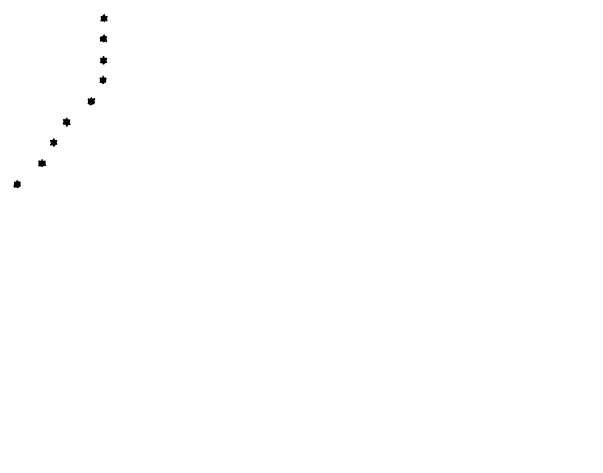

Fig. 6 — D, V plot

III. DECK SETUP FOR SEARCHSF

```
7_9  JOB, CHARGE, ID, 20
7_9  COMMENT, THIS PROGRAM PRODUCES DEFERRED PRINTOUT          ONLY FOR SEPARATE PRINTOUT
7_9  EQUIP, IDSK = RA USES DRUM FOR RANDOM ACCESS              MODES 1, 4, 5 ONLY
                   DF USES DISK FOR RANDOM ACCESS              (DISK PREFERRED)
7_9  EQUIP, NINPUT1 = MT, HY, RO, (C8177-1-128, 03, 01, 999)   TAPE NO 1485
7_9  EQUIP, NINPUT2 = MT, HI, RO, (C8177-128-166, 02, 02, 999) TAPE NO 5353
7_9  EQUIP, NINPUT3 = MT, HI, RO, (C8177-166-252, 02, 03, 999) TAPE NO 5352
7_9  EQUIP, NINPUT4 = MT, HI, RO, (C8177-252-936, 02, 04, 999) TAPE NO 5351
7_9  EQUIP, 25 = MT, HI, RO, (C8167 SEARCHSF, 01, 01, 999)     TAPE NO 3316 MAIN PROGRAM
7_9  EQUIP, 1 = PR      )  SEPARATE PRINTOUT ONLY
7_9  EQUIP, 2 = PR      |  ONE STATEMENT FOR EACH MONTH TO BE PRINTED
       .                |
       .                |
       .                |
       .                )
7_9  EQUIP, 13 = PR        INDEX FOR OPTIONS 2 & 3
7_9  EQUIP, NOUTPUT = MT, HI, WO, (TITLE), DA OUTPUT TAPE, OPTIONAL, REPEAT FOR NO OF TAPES DESIRED
0̄79  BANK, (0), /1/, /2/, MARQ, ALC., (1), APC.
7_9  LOAD, 25
7_9  RUN, 20, 20000, 7
     DATA
     EOF
```

*NOTE — IF NO OF EQUIP STATEMENTS IS >8, DETERMINE N = TOTAL NO OF EQUIP −8 AND CHANGE JOB CARD AS FOLLOWS

```
7_9  JOB (N), CHARGE, ID, 20
```

Fig. 7 — Input card deck setup for SEARCHSF

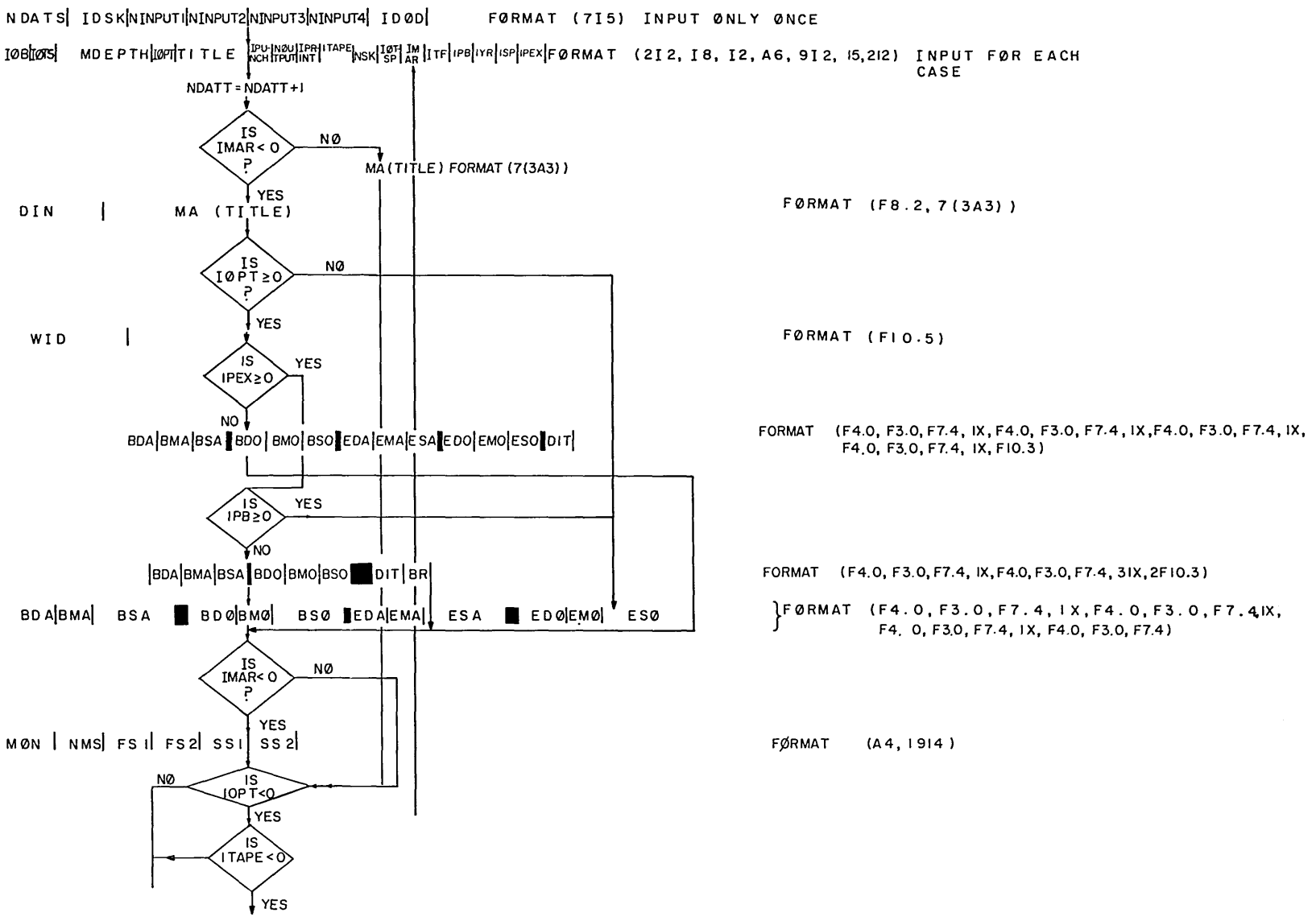
NDATS IDSK NINPUT1 NINPUT2 NINPUT3 NINPUT4 IDØD FØRMAT (7I5) INPUT ØNLY ØNCE
IØB IØTS MDEPTH IØPT TITLE IPU-NCH NØU-TPUT IPR-INT ITAPE NSK IØT-SP IM-AR ITF IPB IYR ISP IPEX FØRMAT (2I2, I8, I2, A6, 9I2, I5, 2I2) INPUT FØR EACH CASE
NDATT = NDATT+1
IS IMAR < 0 ?
NØ
MA (TITLE) FORMAT (7(3A3))
YES
DIN MA (TITLE)
FØRMAT (F8.2, 7(3A3))
IS IØPT ≥ 0 ?
NØ
YES
WID
FØRMAT (F10.5)
IS IPEX ≥ 0
YES
NO
BDA BMA BSA BDO BMO BSO EDA EMA ESA EDO EMO ESO DIT
FORMAT (F4.0, F3.0, F7.4, 1X, F4.0, F3.0, F7.4, 1X, F4.0, F3.0, F7.4, 1X, F4.0, F3.0, F7.4, 1X, F10.3)
IS IPB ≥ 0
YES
NO
BDA BMA BSA BDO BMO BSO DIT BR
FORMAT (F4.0, F3.0, F7.4, 1X, F4.0, F3.0, F7.4, 31X, 2F10.3)
BDA BMA BSA BDØ BMØ BSØ EDA EMA ESA EDØ EMØ ESØ
FØRMAT (F4.0, F3.0, F7.4, 1X, F4.0, F3.0, F7.4, 1X, F4.0, F3.0, F7.4, 1X, F4.0, F3.0, F7.4)
IS IMAR < 0 ?
NØ
YES
MØN NMS FS1 FS2 SS1 SS2
FØRMAT (A4, 1914)
NØ
IS IOPT < 0
YES
IS ITAPE < 0
YES

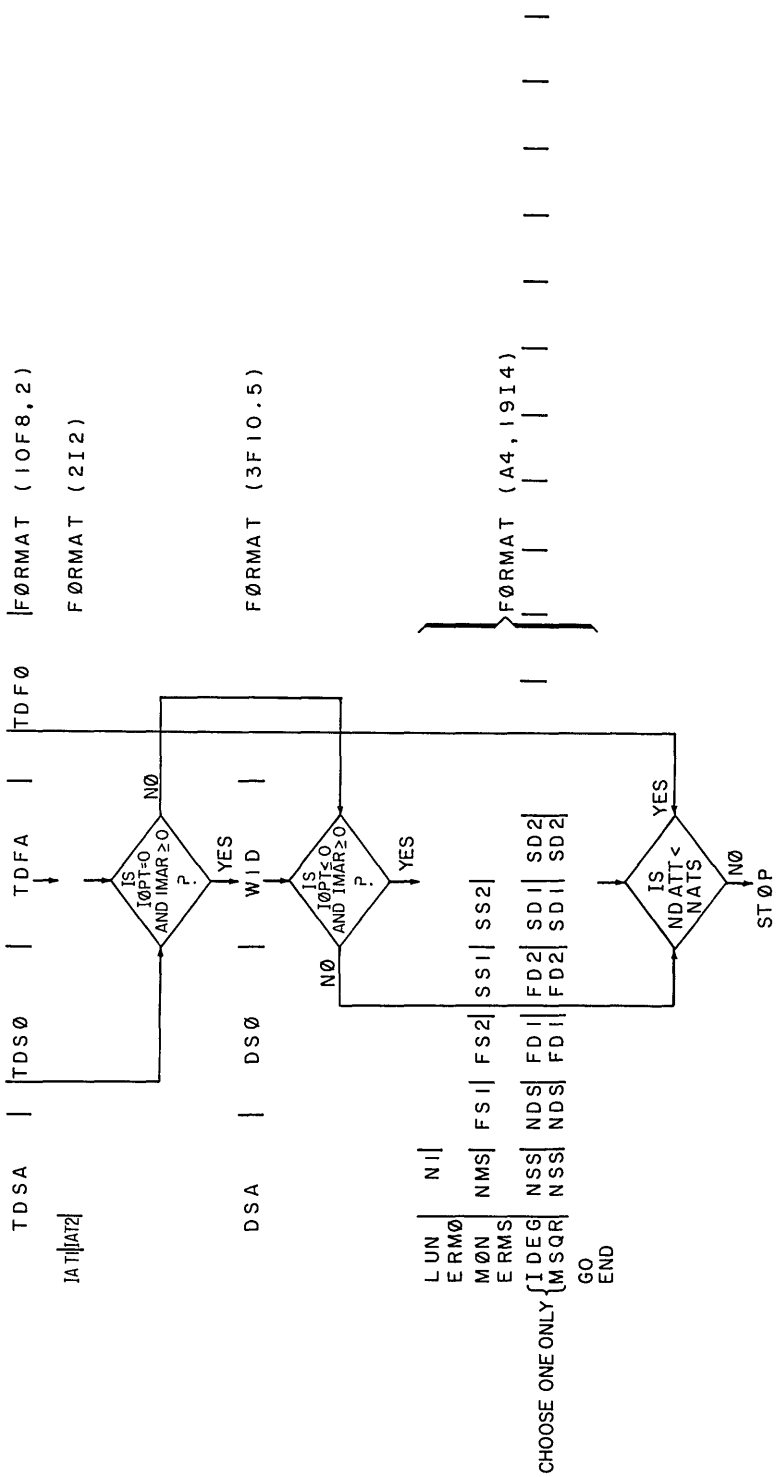

Fig. 8 — Data-deck input formats

NDW-NR-5230/6007 (5-66)

FORTRAN CODING FORM

PROGRAM | NAME

ROUTINE | DATE | PAGE OF

FORTRAN STATEMENT: 0 = ZERO, Ø = ALPHA 0; 1 = ONE, I = ALPHA I; 2 = TWO, Z = ALPHA Z

TYPE	STATEMENT NO.	CONT.	FORTRAN STATEMENT	SEQUENCING NUMBER
	7		20 21 22 23 24 -1	
-1-1			10 1TESTCE 1 -1 1 0 1-1 1 1 1900 1 1	
20.0			MODE NØ. 1 GREAT CIRCLE TRACK	
25.0				
3.0			3.0 5.0 5.0	
MØN			1 3 3	
1-1			10-1 1 -1 1 0 1-1 1 1 1900 1 1	
20.0			MODE NØ. 2 RECTANGULAR AREA ØF MARSDEN SQUARES	
1.0			1.0 3.0 3.0	
MØN			1 3 3	
-1 1			10-1 1 -1 1 0 1 1 1 1 1900 1 1	
			MODE NØ. 3 MARSDEN SQUARE INPUT	
LUN			21	
ERMØ				
MØN			1 3 3	
ERMS				
IDEG			1 2 11 12 21 22	
GØ				
END				
-1-1			10 0 1 -1 1 0 1-1 1 1 1900-1 1	
20.0			MODE NØ. 4 BULLSEYE WITH MARSDEN SQUARES CALCULATED	
25.0				
5.0			5.0	
MØN			1 2 3	
1 1			10 0 1 -1 1 0 1 1 1 1 1900-1 1	
			MODE NØ. 5 BULLSEYE WITH MARSDEN SQUARES INPUT	
4.0			4.0 25.0	
LUN			21	
ERMØ				
MØN			2 1 1 3 3	

GPO 867-146

NDW-NRL-5230/6007 (5-66)

FORTRAN CODING FORM

PROGRAM | NAME

ROUTINE | DATE | PAGE OF

FORTRAN STATEMENT — 0 = ZERO, Ø = ALPHA O; 1 = ONE, I = ALPHA I; 2 = TWO, Z = ALPHA Z

TYPE	STATEMENT NO.	CONT.	FORTRAN STATEMENT	SEQUENCING NUMBER
E	RMS			
I	DEG		1 2 33 34 43 44	
GØ				
END				
-1-1			10 1 135 1-1 0 1-1-1-1 1900 1 1	
50.0			VARIATIØN ØF MODE NØ. 1 WITH PØINT BEARING INPUT	
25.0				
1.0			1.0	200.0 315.0
MØN			1 4 4	
-1-1			10 1 135 1-1 0 1-1 1 1900 1-1	
20.0			VARIATIØN ØF MODE NØ. 1 WITH PØINT EXTENDED INPUT	
25.0				
1.0			1.0 2.0 2.0	200.0
MØN			1 4 4	
EØF				

GPO 867-146

Fig. 9 — Input coding form with seven sample cases

NDATS	Number of data sets to be executed.
IDSK	Logical unit number of drum or disk file.
NINPUT 1	Logical unit number of first NODC tape.
NINPUT 2	Logical unit number of second NODC tape.
NINPUT 3	Logical unit number of third NODC tape.
NINPUT 4	Logical unit number of fourth NODC tape.
IDOD	Storage facility used for random access: -1 for disk; $\geqslant 0$ for drum.
IOB	Depths desired: -1 for observed and standard depths; $\geqslant 0$ for standard and last observed depths.
IOTS	Water parameters desired: -1: temperature and salinity desired in addition to sound speed; $\geqslant 0$: no temperature and salinity.
MDEPTH	Minimum acceptable depth (meters).
IOPT	Specifies mode: -1 for rectangular area (or Marsden-square input); 0 for bull's-eye area; 1 for track retrieval.
TITLE	(up to 6 alphanumeric characters punched on output cards); optional, may be omitted.
IPUNCH	Directs card punching: -1: cards to be punched; $\geqslant 0$: no punch.
NOUTPUT	Logical unit number for output tape.
IPRINT	Directs printing: -1: data to be printed as generated; $\geqslant 0$: no printout.
ITAPE	Directs production of output tape: -1: tape to be produced; $\geqslant 0$: no tape
NSK	Number of files to skip on the output tape before commencing to write. NSK should be 0 for a new tape.
IOTSP	Directs punching of water parameters: -1: temperature and salinity as well as sound speed to be punched; $\geqslant 0$: no temperature and salinity. IPUNCH must also be negative for cards to be punched.
IMAR	Marsden squares: If IOPT = 1, then IMAR must equal -1; if IOPT $\leqslant 0$ and if IMAR = -1, the Marsden squares will be calculated. If IMAR $\geqslant 0$, Marsden squares must be input.

ITF	Specifies system of units: −1: metric input and output; ⩾0: input and output in nautical miles.
IPB	Point bearing: −1: point bearing input desired — latitude and longitude of initial point, starting bearing in degrees, and total track distance are required. ⩾0: no point bearing input.
IYR	Specifies earliest year for which data will be accepted.
ISP	Specifies grouping of output data: −1: data printed in monthly groups; ⩾0: data printed continuously without special grouping.
IPEX	Point-extended input: −1: point-extended input desired; two points and total track distance must be specified; ⩾0: no point extended input.
DIN	Distance increment in nautical miles or kilometers (used in track option to obtain points at DIN intervals along great circle track).
MA	Full title (up to 63 characters).
WID	Swath radius in nautical miles (or kilometers) or radius of bull's-eye area desired.
BDA	Latitude of starting point (degrees).
BMA	Latitude of starting point (minutes).
BSA	Latitude of starting point (seconds).
BDO	Longitude of starting point (degrees).
BMO	Longitude of starting point (minutes).
BSO	Longitude of starting point (seconds).
EDA	Latitude of final point (degrees).
EMA	Latitude of final point (minutes).
ESA	Latitude of final point (seconds).
EDO	Longitude of final point (degrees).
EMO	Longitude of final point (minutes).
ESO	Longitude of final point (seconds).
MON	Month(s) of interest; must be first word on card.
NMS	The number of sequences of months desired.
FS 1	First month of first sequence.
FS 2	Final month of first sequence (must be ⩾FS 1).
SS 1	First month of second sequence.
SS 2	Final month of second sequence.
TDSA	Starting latitude in degrees for Mode 2.
TDSO	Starting longitude in degrees for Mode 2.

TDFA	Final latitude in degrees for Mode 2.
TDFO	Final longitude in degrees for Mode 2.
DSA	Latitude of central point in degrees for Mode 5.
DSO	Longitude of central point in degrees for Mode 5.
LUN	Indicates a logical unit designation input card for Modes 3 and 5; must be first word on card.
N1	Logical unit number for input tape.
ERMO	Erases previous monthly limits (used on Modes 3 and 5 only).
ERMS	Erases previous area limits (Modes 3 and 5 only).
IDEG	Defines area limits for 1° squares; must be the first word on the card.
NSS	10°-Marsden-square number.
NDS	Number of sequences of 1° Marsden squares.
FD1	First 1° Marsden square of first sequence.
FD2	Final 1° Marsden square of first sequence.
SD1	First 1° Marsden square of second sequence.
SD2	Final 1° Marsden square of second sequence.
MSQR	Defines 10° squares; must be the first word on the card. The rest of the card is similar to the IDEG card except values apply to 10° squares and are shifted over to the left so as to eliminate IDEG.
GO	Begin execution of program in Mode 3 or 5.
END	End of program in Mode 3 or 5.
NDATT	Current number of data case; this is computed in the program and therefore is not required as an input.

The following conventions for the use of plus and minus signs should be noted: the negative is used for south latitude and east longitude, and the positive for north latitude and west longitude.

SAMPLE RETRIEVAL CASES

The following seven sample cases represent the use of all five modes and variations. Typical initial conditions for each case are given.

Case 1: Mode 1 (Track). Starting latitude = 3°N, starting longitude = 3°W, final latitude = 5°N, final longitude = 5°W, swath radius = 25.0 nautical miles, month of interest = 3 (March), and distance increment = 20.0 nautical miles. The following data are desired: standard (or interpolated) depths, observed depths (actual data points), temperature, and salinity.

Case 2: Mode 2 (Rectangular Area). Starting latitude = 1°N, starting longitude = 1°W, final latitude = 3°N, final longitude = 3°W, month of interest = 3. Only standard depths, last observed depth, temperature, and salinity are desired.

Case 3: Mode 3 (individual Marsden square number). LUN (logical unit) = 21, month of interest = 3, 10°-Marsden-square number = 1, number of sequences of 1° Marsden squares = 2, first square of first sequence = 11, last square of first sequence = 12, first square of second sequence = 21, last square of second sequence = 22. Standard and observed depths desired, but no temperature and salinity.

Case 4: Mode 4 ("bull's-eye"). Point latitude = 5°N, point longitude = 5°W, radius of bull's-eye = 25.0 nautical miles, months of interest = 2 and 3. Data will be grouped by the month on printouts.

Case 5: Mode 5 ("bull's-eye" with Marsden square input). Point latitude = 4°N, point longitude = 4°W, radius of bull's-eye = 25.0 nautical miles, months of interest = 1 and 3, lun = 21, 10° Marsden square = 1, first square of first sequence = 33, final square of first sequence = 34, first square of second sequence = 43, final square of second sequence = 44. Print standard depths with last observed depth only, no temperature and salinity; print data for each month separately.

Case 6: Mode 1 variation for point bearing input. Starting latitude = 1°N, longitude = 1°W, total track distance = 200.0 km, starting bearing = 315°, swath radius = 25.0 kilometers, month = 4. The program will supply, in metric units, standard and observed depths, temperature, and salinity, but no printout of profiles. An output tape will be written on LUN 35.

Case 7: Mode 1 variation for point-extended input. Calculations for this case will be in nautical miles. The starting latitude and longitude are the same as for Case 6, the second point latitude = 2°N, longitude = 2°W, and total track distance = 200.0 nautical miles.

For all cases we assume a minimum acceptable depth of 10 meters (data rejected if last observed depth is less) and a starting date of 1900 (no earlier data accepted).

We will assume the following initial conditions: NDATS = 7 (number of cases), disk random access of LUN = 20 = IDSK, first input tape is on LUN = 21 = NINPUT1, second input tape is on LUN = 22 = NINPUT2, third input tape is on LUN = 23 = NINPUT3, fourth input tape is on LUN = 24 = NINPUT4, IDOD = —1 = disk file.

SAMPLE OUTPUTS

Figures 10 through 16 are the outputs that resulted from the data inputs for the seven cases described in the preceding section. Thus Fig. 10 shows the output data called for in Case 1 (track mode), Fig. 11 shows the data for Case 2, etc.

SPECIAL PROGRAM REQUIREMENTS

The user of the SEARCHSF program should be aware of the following limitations and special requirements of the program:

- The input latitude should not exceed 89°57′ or be less than 0°3′. If input values are outside these limits, the great-circle calculations will be incorrect.

```
SOUND SPEED DATA SEARCH PROGRAM
      GREAT CIRCLE BEARINGS AND DISTANCES- B,G, ROBERTS,JR      SEARCHSF

                COMPUTED ON MERCURY DATUM = 1968 - DISTANCE IN N, M,

                MAJOR RADIUS =     3443,934125N,M, MINOR RADIUS =      3432,388921N,M,

                  MODE  NO, 1 GREAT CIRCLE TRACK

   FROM LATITUDE        LONGITUDE        TO LATITUDE        LONGITUDE        DISTANCE       BEARING

     3   0 -0,000       3   0 -0,000       5   0 -0,000       5   0 -0,000       169,2364       314,9438

 RANGE      LATITUDE          LONGITUDE     BEARING TO
                                            FINAL POINT
  20.00     3  14  8.89       3  14 12.01    314,9566
  40.00     3  28 17.96       3  28 24.03    314,9724
  60.00     3  42 27.26       3  42 36.04    314,9927
  80.00     3  56 36.85       3  56 47.98    315,0199
 100.00     4  10 46.84       4  10 59.76    315,0584
 120.00     4  24 57.39       4  25 11.24    315,1184
 140.00     4  39  8.83       4  39 22.10    315,2305
 169.24     5   0 -0.00       5   0 -0.00

MARSDEN SQUARES    MODE  NO, 1 GREAT CIRCLE TRACK
  122
  123
  124
  132
  133
  134
  135
  142
  143
  144
  145
  153
  154
  155
MON     1   3   3
SEASON        1, MONTHS       3       3, INCLUSIVE


IOB=-1   IOTS=-1   MINIMUM DEPTH OF FINAL OBSERVATION=      10   IOPT= 1   TESTCE   IPUNCH= 1   IPRINT=-1   ITAPE= 1   NSK=  0   NOP=-0

IOTSP=  1     IMAR= -1     ITF=  1     IPB=  1     YEAR= 1900     ISP=  1     IPEX=  1
**SUBROUTINE CORE IS CLOBBERING LOW CORE, BANK 1 **
```

Fig. 10 — Output for Case 1 (Mode 1)

```
MARSDEN SQUARES    MODE  NO. 2  RECTANGULAR AREA OF MARSDEN SQUARES
  111
  112
  121
  122
MON    1   3   3
SEASON        1, MONTHS       3       3, INCLUSIVE


IOB= 1   IOTS=-1   MINIMUM DEPTH OF FINAL OBSERVATION=      10   IOPT=-1            IPUNCH= 1   IPRINT=-1   ITAPE= 1   NSK=  0   NOP=-0
IOTSP=  1     IMAR= -1     ITF=  1     IPB=  1     YEAR= 1900     ISP=  1     IPEX=  1
```

MSQR	DEG	LATITUDE	LONGITUDE	MONTH	YEAR	FINAL OBSERVED DEPTH	NO. OF POINTS	IDENTR
1	11	1 37 N	1 58 W	3	1964	534	14	1
1	11	1 38 N	1 59 W	3	1964	199	9	2
1	12	1 59 N	2 0 W	3	1964	545	14	3
1	12	1 21 N	2 2 W	3	1964	568	14	4
1	12	1 0 N	2 0 W	3	1964	523	14	5
1	21	2 56 N	1 58 W	3	1964	204	10	6
1	21	2 44 N	1 30 W	3	1965	789	11	7
1	21	2 52 N	1 2 W	3	1965	789	14	8
1	22	2 53 N	2 8 W	3	1965	766	16	9
1	22	2 58 N	2 33 W	3	1965	763	14	10

```
END OF SCAN.       10 STATIONS PULLED FROM LUN 21.
END OF JOB
```

Fig. 11 — Output for Case 2 (Mode 2)

```
IOB=-1   IOTS= 1   MINIMUM DEPTH OF FINAL OBSERVATION=      10   IOPT=-1            IPUNCH= 1   IPRINT=-1   ITAPE= 1   NSK=  0   NOP=-0

IOISP=  1     IMAR=  1     ITF=  1     IPB=  1     YEAR= 1900     ISP=  1     IPEX=  1
          MODE  NO, 3 MARSDEN SQUARE INPUT
LUN   21
ERMO
MON    1   3   3
SEASON        1, MONTHS       3       3, INCLUSIVE
ERMS
IDEG   1   2  11  12  21  22
GO
```

MSQR	DEG	LATITUDE	LONGITUDE	MONTH	YEAR	FINAL OBSERVED DEPTH	NO. OF POINTS	IDENTR
1	11	1 37 N	1 58 W	3	1964	534	33	1
1	11	1 38 N	1 59 W	3	1964	199	26	2
1	12	1 59 N	2 0 W	3	1964	545	30	3
1	12	1 21 N	2 2 W	3	1964	568	32	4
1	12	1 0 N	2 0 W	3	1964	523	32	5
1	21	2 56 N	1 58 W	3	1964	204	27	6
1	21	2 44 N	1 30 W	3	1965	789	23	7
1	21	2 52 N	1 2 W	3	1965	789	29	8
1	22	2 53 N	2 8 W	3	1965	766	27	9
1	22	2 58 N	2 33 W	3	1965	763	27	10

```
THE TOTAL NUMBER OF LINES PRINTED FOR THIS JOB WAS          27

END OF SCAN,       10 STATIONS PULLED FROM LUN 21.
END

END OF JOB
```

Fig. 12 — Output for Case 3 (Mode 3)

```
POINT LATITUDE=   5.00000     POINT LONGITUDE=   5.00000     SWATH RADIUS=  25.00000


MARSDEN SQUARES    MODE  NO. 4  BULLSEYE WITH MARSDEN SQUARES CALCULATED
  143
  144
  145
  146
  153
  154
  155
  156
MON    1   2   3
SEASON        1, MONTHS       2       3, INCLUSIVE



IOB=-1   IOTS=-1   MINIMUM DEPTH OF FINAL OBSERVATION=      10   IOPT= 0            IPUNCH= 1   IPRINT=-1   ITAPE= 1   NSK=  0   NOP=-0
IOTSP=  1     IMAR= -1     ITF=  1     IPB=  1     YEAR= 1900     ISP= -1     IPEX=  1



END OF SCAN,        5 STATIONS PULLED FROM LUN 21,
END OF JOB
```

RANGE	DIST1	MSQR	DEG	LATITUDE	LONGITUDE	MONTH	YEAR	FORDW	NO. POINTS	ADDRESS	IDENTR
1.990	0.000	1	45	4 58 N	5 0 W	2	1965	90	7	672	1
2.985	0.000	1	45	4 57 N	5 0 W	2	1965	200	9	1344	2
16.458	0.000	1	44	4 56 N	4 44 W	3	1959	600	15	0	3
22.790	0.000	1	54	5 9 N	4 39 W	3	1964	21	2	2010	4
23.033	0.000	1	54	5 7 N	4 38 W	3	1964	41	2	2688	5

Fig. 13 — Output for Case 4 (Mode 4)

```
IOB= 1   IOTS= 1   MINIMUM DEPTH OF FINAL OBSERVATION=      10   IOPT= 0            IPUNCH= 1   IPRINT=-1   ITAPE= 1   NSK=  0   NOP=-0

IOTSP=  1     IMAR=  1     ITF=  1     IPB=  1     YEAR= 1900     ISP= -1     IPEX=  1
          MODE  NO, 5  BULLSEYE WITH MARSDEN SQUARES INPUT
POINT LATITUDE=   4.00000     POINT LONGITUDE=   4.00000     SWATH RADIUS=  25.00000
LUN   21
ERMO
MON    2   1   1   3   3
SEASON        1, MONTHS       1       1, INCLUSIVE
SEASON        2, MONTHS       3       3, INCLUSIVE
ERMS
IDEG   1   2  33  34  43  44
GO



END OF SCAN,        3 STATIONS PULLED FROM LUN 21.
END

END OF JOB
```

RANGE	DIST1	MSQR	DEG	LATITUDE	LONGITUDE	MONTH	YEAR	FOBDH	NO POINTS	ADDRESS	IDENTR
0.999	0.000	1	43	4 0 N	3 59 W	1	1964	1919	25	0	1
1.999	0.000	1	44	4 0 N	4 2 W	3	1964	930	18	1344	2
6.996	0.000	1	44	4 0 N	4 7 W	3	1963	1931	25	672	3

Fig. 14 — Output for Case 5 (Mode 5)

```
SOUND SPEED DATA SEARCH PROGRAM
      GREAT CIRCLE BEARINGS AND DISTANCES- B.G. ROBERTS,JR      SEARCHSF

                COMPUTED ON MERCURY DATUM - 1968 - DISTANCE IN K. M.

                MAJOR RADIUS =     6378.166000K.M. MINOR RADIUS =      6356.784282K.M.

                  VARIATION OF  MODE  NO. 1 WITH POINT BEARING INPUT

    FROM LATITUDE        LONGITUDE        TO LATITUDE        LONGITUDE        DISTANCE        BEARING

      1   0  0.000       1   0  0.000       2  16 42.856       2  16 16.562       199.9950       315.0000

 RANGE       LATITUDE          LONGITUDE     BEARING TO
                                             FINAL POINT
  50.00      1  19  7.13      1  19  7.49    315.0577
 100.00      1  38 15.40      1  38 14.00    315.1456
 150.00      1  57 25.42      1  57 18.94    315.3278
 200.00      2  16 42.86      2  16 16.56


MARSDEN SQUARES   VARIATION OF  MODE  NO. 1 WITH POINT BEARING INPUT
  100
  101
  110
  111
  112
  121
  122
MON     1   4   4
SEASON        1, MONTHS       4       4, INCLUSIVE


IOB=-1   IOTS=-1   MINIMUM DEPTH OF FINAL OBSERVATION=      10   IOPT= 1            IPUNCH= 1   IPRINT= 1   ITAPE=-1   NSK=  0   NOP=35
IOTSP=  1     IMAR= -1     ITF= -1     IPB= -1     YEAR= 1900     ISP=  1     IPEX=  1


END OF SCAN.        0 STATIONS PULLED FROM LUN 21.
END OF JOB
```

Fig. 15 — Output for Case 6 (Mode 1 variation, point bearing)

SOUND SPEED DATA SEARCH PROGRAM
GREAT CIRCLE BEARINGS AND DISTANCES- B.G. ROBERTS,JR SEARCHSF

COMPUTED ON MERCURY DATUM = 1968 - DISTANCE IN N. M.

MAJOR RADIUS = 3443.934125N.M. MINOR RADIUS = 3432.388921N.M.

VARIATION OF MODE NO. 1 WITH POINT EXTENDED INPUT

FROM LATITUDE	LONGITUDE	TO LATITUDE	LONGITUDE	DISTANCE	BEARING
1 0 0.000	1 0 0.000	3 21 35.887	3 21 47.130	199.9951	314.8295

RANGE	LATITUDE	LONGITUDE	BEARING TO FINAL POINT
20.00	1 14 7.26	1 14 12.54	314.8463
40.00	1 28 14.76	1 28 24.92	314.8647
60.00	1 42 22.53	1 42 37.12	314.8857
80.00	1 56 30.60	1 56 49.13	314.9102
100.00	2 10 39.03	2 11 0.90	314.9401
120.00	2 24 47.90	2 25 12.37	314.9786
140.00	2 38 57.33	2 39 23.42	315.0322
160.00	2 53 7.56	2 53 33.85	315.1168
180.00	3 7 19.04	3 7 43.21	315.2963
200.00	3 21 35.89	3 21 47.13	

MARSDEN SQUARES VARIATION OF MODE NO. 1 WITH POINT EXTENDED INPUT

100
101
102
110
111
112
113
120
121
122
123
124
131
132
133
134
142
143

MON 1 4 4
SEASON 1. MONTHS 4 4. INCLUSIVE

```
IOB=-1   IOTS=-1   MINIMUM DEPTH OF FINAL OBSERVATION=      10   IOPT= 1          IPUNCH= 1   IPRINT= 1   ITAPE=-1   NSK=  0   NOP=35
IOISP=  1     IMAR= -1     ITF=  1     IPB=  1     YEAR= 1900     ISP=  1     IPEX= -1



END OF SCAN,        2 STATIONS PULLED FROM LUN 21.
END OF JOB
```

RANGE	DIST1	MSOR	DEG	LATITUDE	LONGITUDE	MONTH	YEAR	FORDW	NO. POINTS	ADDRESS	IDENTR
79.492	20.888	1	21	2 9 N	1 40 W	4	1961	1512	35	0	1
165.236	3.614	1	23	2 54 N	3 0 W	4	1961	1022	28	672	2

```
JOB MESSAGES
        THIS PROGRAM PRODUCES DELAYED PRINTOUT
                JOB,606762,  120,5748GR
      00000000**OF ON*
                RELEASED 21=MT00=(C8177-1-128),ED=01,RL=01,DATE=081771,RC=999
                RELEASED 25=MT01=(C8167 SEARCHSF),ED=01,RL=01,DATE=090771,RC=999
```

Fig. 16 — Output for Case 7 (Mode 1 variation, point extended)

- When Mode 2 (rectangular area) is used, there should be at least a 2° spread in latitude and in longitude; otherwise, extraneous squares may be introduced. If the desired area is less than 2° in either dimension, Mode 3 should be used. Also, the starting and final latitudes and longitudes should be input as explained for retrieval Mode 2.

- The NODC tapes must be mounted in the correct order; that is, the tape titled C8177-1-128 must be first, C8177-128-166 must be second, C8177-166-252 must be third, and C8177-252-936 fourth.

- When using the option to print separately by months, one must have a $^{7}_{9}$ equip, MO = PR card for each month you desire, where MO = the number of the month. If a MO = PR card is omitted, you will lose the printout for that month. There must be a $^{7}_{9}$ equip, 13 = PR card to obtain the index for Modes 2 and 3.

- The bank card (see Fig. 7) must always be included; otherwise the program will abort.

- The tape-reading section of the program is written in Compass [3]; accordingly, any prospective users with computers other than CDC 3800 will have to convert that portion of the program.

- Logical units numbered 30, 31, 32, and 33 should not be used for any tapes.

- It is suggested that any punched cards desired should be punched from a magnetic tape output.

- Operation of the program requires a minimum of five tape drives and a random access device such as a drum or disk file. The disk file is preferred because of its larger storage capacity.

- Memory storage requirements for the program are 101, 117 octal locations or 33,359 decimal locations, plus space for system functions.

REFERENCES

1. "NODC Computer Archive Ocean Station Format," IR No. 69-61, Naval Oceanographic Office.

2. "The Hudson Laboratories Ray Tracing Program," Technical Report 150, Hudson Laboratories of Columbia University, Dobbs Ferry, New York.

3. W.E. Yergen, "The Limits Retrieval Functions," IR No. 69-59, Naval Oceanographic Office.

4. "NODC Code Tables," March 26, 1970, "Country and Ship," by alphabet and code.

Security Classification

DOCUMENT CONTROL DATA - R & D

(Security classification of title, body of abstract and indexing annotation must be entered when the overall report is classified)

1. ORIGINATING ACTIVITY *(Corporate author)* Naval Research Laboratory Washington, D.C. 20375	2a. REPORT SECURITY CLASSIFICATION UNCLASSIFIED 2b. GROUP

3. REPORT TITLE

RETRIEVAL PROGRAM FOR ARCHIVAL NANSEN-CAST DATA

4. DESCRIPTIVE NOTES *(Type of report and inclusive dates)*

Interim Report on a continuing NRL Problem

5. AUTHOR(S) *(First name, middle initial, last name)*

B.G. ROBERTS, Jr.

6. REPORT DATE October 25, 1973	7a. TOTAL NO. OF PAGES 32	7b. NO. OF REFS 4
8a. CONTRACT OR GRANT NO. NRL Problem S01-67 b. PROJECT NO. RF 52-552-402-6090 c. d.	9a. ORIGINATOR'S REPORT NUMBER(S) NRL Report 7633 9b. OTHER REPORT NO(S) *(Any other numbers that may be assigned this report)*	

10. DISTRIBUTION STATEMENT

Approved for public release; distribution unlimited

11. SUPPLEMENTARY NOTES	12. SPONSORING MILITARY ACTIVITY Department of the Navy Naval Electronic Systems Command Washington, D.C. 20360

13. ABSTRACT

A program has been written in Fortran and Compass for the retrieval of environmental data from a compacted version of the National Oceanographic Data Center tapes. The tape file currently contains the results of approximately 361,000 Nansen casts. Each cast (or station) has such data as sound speed, temperature, and salinity recorded at various depths. The information retrieval program has five modes of operation to serve a variety of user needs. This report includes a complete description of the program, explains the five modes, and gives examples of each.

DD FORM 1 NOV 65 1473 (PAGE 1)

S/N 0101-807-6801

Security Classification

Security Classification

14. KEY WORDS	LINK A ROLE	LINK A WT	LINK B ROLE	LINK B WT	LINK C ROLE	LINK C WT
Data centers						
Oceanographic data						
Data retrieval						
Data storage						
Nansen casts						
Computer programs						
Information retrieval						
Sound speeds						
Temperatures						
Salinity						

DD FORM 1 NOV 65 1473 (BACK)
(PAGE 2)

Security Classification

*U.S. GOVERNMENT PRINTING OFFICE: 1972 — 543-166/7-122 1-3