NRL Report 6996

UNCLASSIFIED

The Effect of Sea Roughness on the Bandwidth of Radar Backscatter

D. L. HAMMOND

E. O. Hulburt Center for Space Research
Space Science Division

February 2, 1970

NAVAL RESEARCH LABORATORY
Washington, D.C.

This document has been approved for public release and sale; its distribution is unlimited.

UNCLASSIFIED

CONTENTS

Abstract	ii
Problem Status	ii
Authorization	ii
INTRODUCTION	1
DATA SOURCE	1
DATA ANALYSIS	2
THE QUANTITY Q	4
DATA REDUCTION	4
DISCUSSION	5
RESULTS	6
ACKNOWLEDGMENTS	6
REFERENCES	7

ABSTRACT

The doppler signals of an 8-mm aircraft radar navigation system were analyzed to determine the effect of sea roughness on the bandwidth of the radar backscatter. The ground truths giving the wave heights were obtained by estimates made by the scientist aboard the aircraft and by hindcasts of the sea conditions based on weather records. The results are given in terms of a factor called Q which varies inversely with bandwidth and is independent of aircraft altitude and velocity. When the data are arranged in the order of increasing wave heights, there is a trend of decreasing Q with increasing wave height. That is, the bandwidth increases as sea roughness increases.

PROBLEM STATUS

A final report on one phase of a continuing problem.

AUTHORIZATION

NRL Problem G01-05
Project A37538/652/69F48-551-702

Manuscript submitted October 2, 1969.

UNCLASSIFIED

THE EFFECT OF SEA ROUGHNESS ON THE BANDWIDTH OF RADAR BACKSCATTER

INTRODUCTION

The backscatter of radar energy from the sea surface has been studied before with the objective of minimizing sea-clutter noise with respect to a target. This report examines the bandwidth of the backscattered energy to determine its relationship to the sea state. Instead of using bandwidth directly, a dimensionless number called "Q," which is inversely proportional to bandwidth, is correlated with the sea state. Q is used because it is independent of aircraft velocity and altitude. Therefore changes in Q from one flight to another are attributed to changes in sea state.

DATA SOURCE

The data were collected during 1958 and 1959 in flight tests of an aircraft navigation radar system. The radar was an 8-mm cw doppler system. The receiver was a zero-i-f superheterodyne that used an attenuated sample of the transmitter power to mix with the received signals (Fig. 1). The frequency difference is an audio signal that is the doppler return from the surface. The audio signals were amplified and recorded on magnetic tape.

The radar system radiates simultaneously through two antennas, producing a pair of beams directed aft and downward from the aircraft. These antennas are rigidly fixed to the aircraft so that the beams are pointed diagonally downward to the port and starboard (Fig. 2). The one-way antenna beamwidth is 3×5 degrees.

The flight data used for this report were taken over water, and the report of surface conditions as recorded by the observer corresponded to the hindcast of surface conditions as received from the Naval Oceanographic Office. This report includes surface conditions from very smooth (0 to 3 ft waves) to very rough (15 to 18 ft waves).

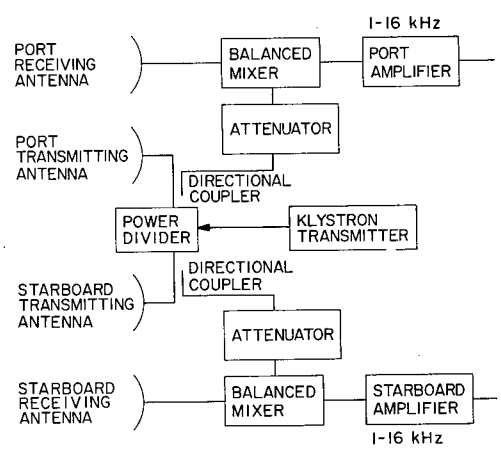

Fig. 1 - The navigation radar system

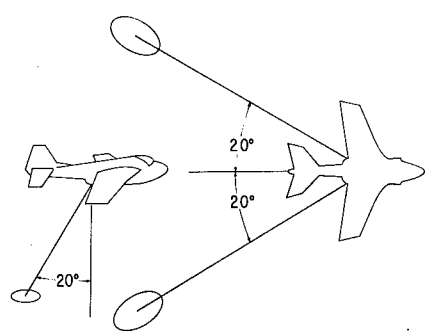

Fig. 2 - Antenna beam pointing relative to the aircraft

DATA ANALYSIS

The description of the geometric relations between the antenna beams and the sea surface will show the basis for data analysis.

Figure 3 shows the center of an antenna beam in a three-dimensional coordinate system such that the xy plane is the surface, with the aircraft flying with ground velocity V in the negative y direction at altitude h.

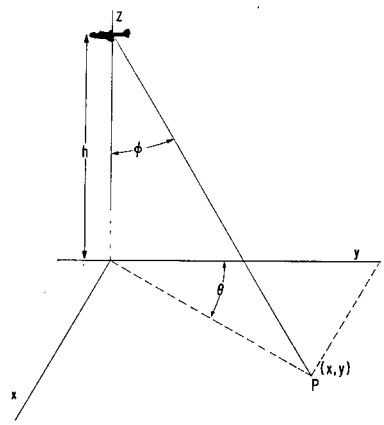

Fig. 3 - Antenna pointing. The geometric relationship between a point on the surface and the aircraft is shown.

The doppler frequency at the beam center is $f_d = 2v/\lambda$, where v is the relative velocity of the aircraft and λ is wavelength. The relative velocity is the scalar product of the ground velocity vector and a unit vector in the direction of the antenna beam. The relative velocity of the aircraft and a point on the surface at (x, y) is given by

$$v = \overline{V} \cdot \overline{u}. \tag{1}$$

The ground velocity of the aircraft is

$$\overline{V} = -s\overline{j}. \tag{2}$$

The unit vector $\overline{u}$ from the aircraft to a point on surface (x, y) is given by the following equation:

$$\overline{u} = \frac{x\overline{i} + y\overline{j} - h\overline{z}}{(x^2 + y^2 + h^2)^{1/2}}. \tag{3}$$

The relative velocity of aircraft in terms of (x, y, h) and s is

$$v = \frac{-sy}{(x^2 + y^2 + h^2)^{1/2}}. \tag{4}$$

The latter equation can be rewritten as Eq. (5) to show that the contours of constant relative velocity on the surface are hyperbolas:

$$y^2\left(\frac{s^2 - v^2}{v^2 h^2}\right) - \frac{x^2}{h^2} = 1. \tag{5}$$

UNCLASSIFIED

These are also contours of doppler frequency. Figure 4 shows the illumination of these contours by the antenna. Since the antenna pattern will illuminate several doppler contours, the received signal will be a spread of doppler frequencies weighted by the beam pattern.

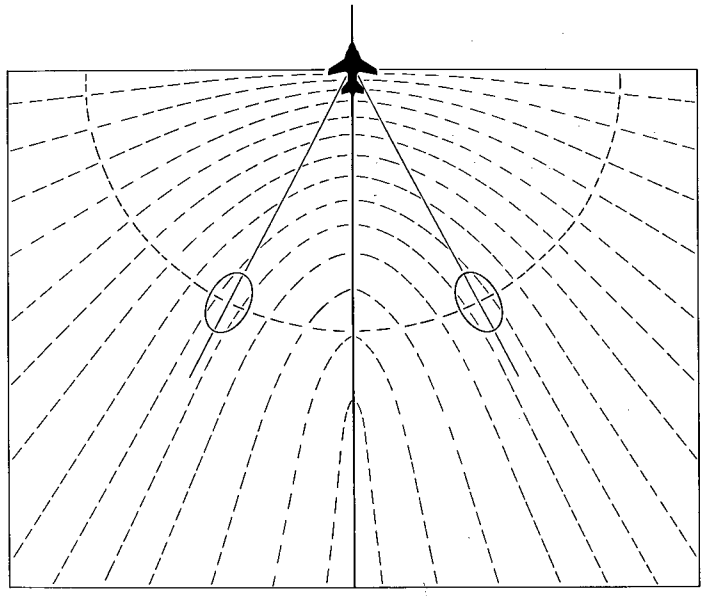

Fig. 4 - The illumination of the doppler frequency contours by the antenna pattern

The equation for relative velocity can also be written as a function of the ground velocity and the pointing angles relative to the aircraft. The $\cos\theta$ and $\sin\varphi$ are seen to be

$$\cos\theta = \frac{y}{(x^2 + y^2)^{1/2}}$$

and (6)

$$\sin\varphi = \frac{(x^2 + y^2)^{1/2}}{(x^2 + y^2 + h^2)^{1/2}}.$$

Therefore, the relative velocity is also

$$v = -s\cos\theta\sin\varphi. \tag{7}$$

This form of the equation shows that the relative velocity of a reflecting point is independent of the aircraft's altitude h.

The doppler frequency at the beam center is a linear function of the aircraft velocity. The bandwidth of the doppler signal is also a linear function of the aircraft velocity, since the bandwidth is defined as the difference in doppler frequency at the 3-dB points of the doppler spectrum.

THE QUANTITY Q

Since both the doppler frequency at the beam center and the bandwidth of the doppler spectrum are directly proportional to aircraft velocity, the ratio between them is independent of it. This ratio will be called Q, analogous to the Q of a tuned circuit.

Up to this point in the discussion, the Q is assumed to be independent of aircraft velocity and altitude. If these were indeed the only factors affecting the doppler spectrum, then the Q of all the measurements would be equal. However, there is another influence on the bandwidth of the radar signal, and that is the motion of the scatterers (facets) on the surface. It has been determined both experimentally and theoretically (1,2) that the doppler bandwidth is broadened by motion of the scatterers. Therefore Q, which is inversely proportional to bandwidth, will be reduced as the sea surface becomes rougher.

DATA REDUCTION

The data were edited, digitized, and recorded on computer magnetic tape. A spectral analysis of the digital data was performed by a digital computer. The calculated power spectra had a resolution of 10 or 20 Hz depending on the digitizing rate. Each point of the spectrum had a standard deviation of 10% of the average value at that frequency. Each estimate of the power spectrum used either 5 or 10 sec of data.

Some of the data, particularly that taken over smooth water, had a low signal-to-noise ratio. The signal power spectrum in these cases would be on top of a background noise level which is almost as large as the signal. This background noise level was removed by (a) fitting a second-degree equation to the mean background level (with respect to frequency) and (b) subtracting the mean curve from points on the power spectrum. The result is the radar doppler spectrum used to calculate the Q.

The mean frequency of each power spectrum is calculated by the following equation:

$$\overline{f} = \frac{\Sigma f_i P_i}{\Sigma P_i}, \tag{8}$$

where

$\overline{f}$ = mean frequency,

f_i = the i th frequency, and

P_i = the amplitude of the power spectrum at the ith frequency.

The standard deviation of the power spectrum is calculated by the following equation:

$$\sigma_f = \left(\frac{\Sigma f_i^2 P_i}{\Sigma P_i}\right)^{1/2}, \tag{9}$$

where σ_f = standard deviation.

The frequency range used for these calculations is taken over a range of frequencies out from the center frequency to about the frequency where the amplitude of P is down to

UNCLASSIFIED

less than 10% of the peak value. The 3-dB bandwidth of the power spectrum is taken to be 2.36 standard deviations. This follows from the assumption that the shape of the power spectrum curve is Gaussian.

DISCUSSION

Figure 5 shows two typical power spectra, one taken over smooth water and the other over rough water. The effect of subtracting the background level from the signal portion of the power spectrum can be seen especially in the smooth-water example. It can also be seen that the fluctuations of the power spectrum for the smooth-water example follow the background noise fluctuations, while for the rough water case the signal fluctuations are much larger than the background noise fluctuations.

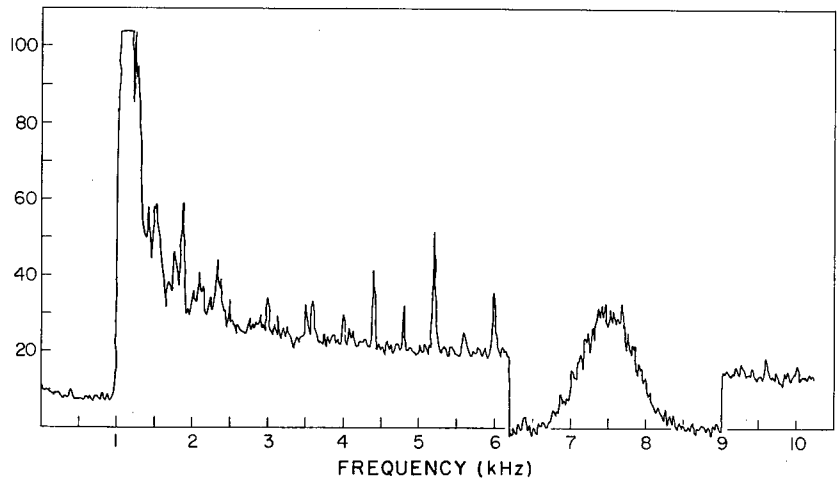

(a) Smooth water

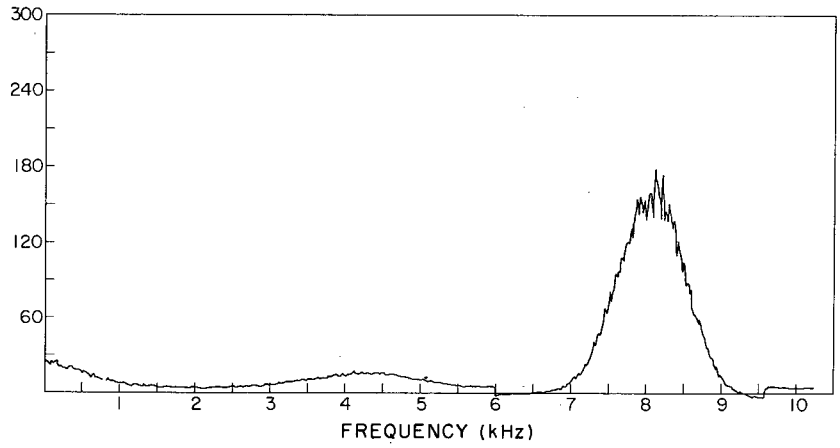

(b) Rough water

Fig. 5 - Two typical power spectra. The units used for the vertical axes and arbitrary scales of power.

This is due to two factors: (a) the signal-to-noise ratio and (b) the relative orientation of the backscatters within the antenna beam. The smooth-water signal was about equal to the receiver noise, so that the receiver noise was a significant factor in the fluctuations across the spectral band. The smooth-water case also had a uniform distribution of the orientation of backscatters in the antenna beam. This caused the power return vs frequency to follow the antenna pattern. The rough-water signal was much greater than the receiver noise, so that the contribution of receiver noise and its fluctuations on the radar return was very small. The orientation of the backscatters in rough water tend to be nonuniform. In fact it was possible for some backscatters, associated with a particular doppler frequency, to be shadowed by a large wave. Therefore the reflected radar energy at that doppler frequency would be less than that expected by antenna weighting alone. On the other hand, some backscatters might be positioned so as to reflect more energy than the average for its location in the antenna pattern.

RESULTS

Figure 6 is a graph of the value of Q vs wave heights. The smooth-water data are shown on the left, and the wave heights increase for the rough-water data on the right. The numbers in the bottom of the bars on the graph are the significant wave heights. There is shown a trend, as expected, of decreasing Q with increasing wave height.

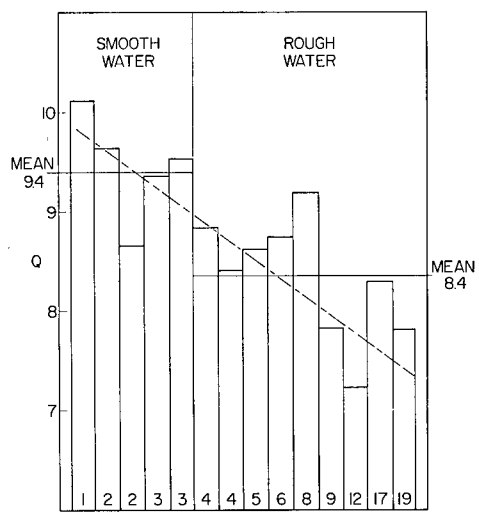

Fig. 6 - Results. The numbers at the bottom are the significant wave heights for the different data runs.

ACKNOWLEDGMENTS

This report would not have been possible without the help of several other people. James E. Kenney, who recorded the original data, supplied the necessary information about the time, location, and other particulars about the recorded data. Benjamin D. Au was responsible for the laboratory spectrum analyzer that was used to sort data. Robert H. Hevey transcribed the observer's remarks from magnetic tape to the notebook. Enzo A. Uliana conducted the digital data reduction that gave the numerical values for the final results. John Wilkerson, Navy Oceanographic Office, supplied the hindcasts of the sea conditions for the locations and times that the data were recorded. Kalen J. Craig was my good right hand and helped with every phase of the data analysis. I am deeply indebted to these men, and I gladly acknowledge their support.

REFERENCES

UNCLASSIFIED

1. Pidgeon, V.W., "Doppler Dependence of Radar Sea Return," J. Geophys. Res. 73:1333 (Feb. 15, 1968)

2. Valenzuela, G.R., and Laing, M.B., "Study of Doppler Spectra of Radar Sea-Echo," NRL Report 6934 (Nov. 3, 1969)

UNCLASSIFIED

Security Classification

DOCUMENT CONTROL DATA - R & D

(Security classification of title, body of abstract and indexing annotation must be entered when the overall report is classified)

1. ORIGINATING ACTIVITY *(Corporate author)* Naval Research Laboratory Washington, D.C. 20390	2a. REPORT SECURITY CLASSIFICATION Unclassified 2b. GROUP

3. REPORT TITLE

THE EFFECT OF SEA ROUGHNESS ON THE BANDWIDTH OF RADAR BACKSCATTER

4. DESCRIPTIVE NOTES *(Type of report and inclusive dates)*

A final report on one phase of the problem.

5. AUTHOR(S) *(First name, middle initial, last name)*

D.L. Hammond

6. REPORT DATE February 2, 1970	7a. TOTAL NO. OF PAGES 12	7b. NO. OF REFS 2
8a. CONTRACT OR GRANT NO. NRL Problem G01-05 b. PROJECT NO. A37538/652/69F48-551-702 c. d.	9a. ORIGINATOR'S REPORT NUMBER(S) NRL Report 6996 9b. OTHER REPORT NO(S) *(Any other numbers that may be assigned this report)*	

10. DISTRIBUTION STATEMENT

This document has been approved for public release and sale; its distribution is unlimited.

11. SUPPLEMENTARY NOTES	12. SPONSORING MILITARY ACTIVITY Department of the Navy (Naval Air Systems Command), Washington, D.C. 20360

13. ABSTRACT

The doppler signals of an 8-mm aircraft radar navigation system were analyzed to determine the effect of sea roughness on the bandwidth of the radar backscatter. The ground truths giving the wave heights were obtained by estimates made by the scientist aboard the aircraft and by hindcasts of the sea conditions based on weather records. The results are given in terms of a factor called Q which varies inversely with bandwidth and is independent of aircraft altitude and velocity. When the data are arranged in the order of increasing wave heights, there is a trend of decreasing Q with increasing wave height. That is, the bandwidth increases as sea roughness increases.

DD FORM 1 NOV 65 1473 (PAGE 1)

S/N 0101-807-6801

Security Classification

Security Classification

14. KEY WORDS	LINK A ROLE	LINK A WT	LINK B ROLE	LINK B WT	LINK C ROLE	LINK C WT
Sea roughness and radar backscatter						
Bandwidth of radar backscatter						
Sea clutter						
Doppler spectra						

DD FORM 1 NOV 65 1473 (BACK)
(PAGE 2)

Security Classification