NRL Report 8063

# The Bragg Crystal Spectrom as a Diagnostic Tool

JOHN F. MEEKINS

*Upper Air Physics Branch*
*Space Sciences Division*

February 15, 1977

**NAVAL RESEARCH LABORATORY**
**Washington, D.C.**

Approved for public release; distribution unlimited.

SECURITY CLASSIFICATION OF THIS PAGE (When Data Entered)

| REPORT DOCUMENTATION PAGE | | READ INSTRUCTIONS BEFORE COMPLETING FORM |
|---|---|---|
| 1. REPORT NUMBER<br>NRL Report 8063 | 2. GOVT ACCESSION NO. | 3. RECIPIENT'S CATALOG NUMBER |
| 4. TITLE (and Subtitle)<br>THE BRAGG CRYSTAL SPECTROMETER AS A DIAGNOSTIC TOOL | | 5. TYPE OF REPORT & PERIOD COVERED<br>Interim report on a continuing NRL Problem.<br>6. PERFORMING ORG. REPORT NUMBER |
| 7. AUTHOR(s)<br>John F. Meekins | | 8. CONTRACT OR GRANT NUMBER(s) |
| 9. PERFORMING ORGANIZATION NAME AND ADDRESS<br>Naval Research Laboratory<br>Washington, D.C. 20375 | | 10. PROGRAM ELEMENT, PROJECT, TASK AREA & WORK UNIT NUMBERS<br>A01-64.101 |
| 11. CONTROLLING OFFICE NAME AND ADDRESS<br>Department of the Navy<br>Office of Naval Research<br>Arlington, Va. 22217 | | 12. REPORT DATE<br>February 15, 1977<br>13. NUMBER OF PAGES<br>48 |
| 14. MONITORING AGENCY NAME & ADDRESS(if different from Controlling Office) | | 15. SECURITY CLASS. (of this report)<br>Unclassified<br>15a. DECLASSIFICATION/DOWNGRADING SCHEDULE |

16. DISTRIBUTION STATEMENT (of this Report)

Approved for public release; distribution unlimited.

17. DISTRIBUTION STATEMENT (of the abstract entered in Block 20, if different from Report)

18. SUPPLEMENTARY NOTES

19. KEY WORDS (Continue on reverse side if necessary and identify by block number)

Crystal
Diffraction
Lithium fluoride
Spectrometer
X-ray

20. ABSTRACT (Continue on reverse side if necessary and identify by block number)

The Bragg crystal spectrometer, which consists of a diffraction crystal and a detector, is useful for diagnosing X-ray spectra. As with most instruments, its usefulness is limited by its characteristics or parameters. Crystal diffraction is treated theoretically here. Then a mathemeatical description of the interaction of the source, crystal, and detector is developed from a phenomenological viewpoint. Use of the Bragg crystal spectrometer as a diagnostic tool is discussed in terms of this description. Finally, methods for directly measuring Bragg crystal spectrometer characteristics are discussed and demonstrated with a lithium fluoride crystal as an example.

DD FORM 1 JAN 73 1473 EDITION OF 1 NOV 65 IS OBSOLETE
S/N 0102-014-6601



SECURITY CLASSIFICATION OF THIS PAGE (When Data Entered)

CONTENTS

1. INTRODUCTION . . . . . 1

2. CHARACTERISTICS OF CRYSTAL DIFFRACTION, THEORY . . . . . 1

2.1 Bragg's Law . . . . . 1
2.2 The Small Crystal . . . . . 4
2.3 The Mosaic Crystal . . . . . 8
2.4 The Perfect Crystal . . . . . 10
2.5 Discussion of Theory . . . . . 16

3. INTERACTION OF SOURCE, CRYSTAL, AND DETECTOR . . . . . 16

3.1 Polarization and Rotations . . . . . 17
3.2 The Source, Crystal, and Detector: Operator Approach . . . . . 20

4. APPLICATIONS TO REAL SOURCES AND USE AS A DIAGNOSTIC TOOL . . . . . 27

5. DETERMINATION OF THE CRYSTAL PARAMETERS . . 32

5.1 Absolute Integral Reflection Coefficients . . . . . 32
5.2 Relative Integral Reflection Coefficients . . . . . 38
5.3 Reflectivity Curve . . . . . 39

6. INTEGRAL REFLECTION COEFFICIENTS: AN EXAMPLE, LITHIUM FLUORIDE . . . . . 41

7. CONCLUSIONS AND DISCUSSION . . . . . 41

REFERENCES . . . . . 43

APPENDIX A — Statistics and Propagation of Errors . . . . . 44

# THE BRAGG CRYSTAL SPECTROMETER AS A DIAGNOSTIC TOOL

## 1. INTRODUCTION

The Bragg crystal spectrometer, consisting principally of a diffraction crystal and a detector sensitive to the diffracted radiation, is useful for determining source characteristics in the X-ray region of the spectrum. Not only can it be used for identifying spectral features, but also for determining quantitatively the flux in spectral lines and in the continuum. Because its response is sensitive to the source polarization direction, it can be used, with some limitations, as a polarimeter. If sufficient information on the diffraction characteristics is known, it can also be used to determine spectral line shapes.

In the following, we will first outline the theory of crystal diffraction phenomena. We will then develop a mathematical description of the interaction of source, crystal, and detector. Using this description, we will discuss employment of the Bragg crystal spectrometer for determination of the properties of source spectra and, simultaneously, define the required spectrometer characteristics. Finally, methods for determining the spectrometer characteristics will be given with examples of results obtained.

## 2. CHARACTERISTICS OF CRYSTAL DIFFRACTION, THEORY

### 2.1 Bragg's Law

Consider a small parallelepiped of a crystal lattice. This parallelepiped is defined as a unit cell containing lattice points only at its corners. If one of the corners is chosen as the origin, the location of an adjacent corner (lattice point) in the unit cell is given by one of the vectors **A**, **B**, or **C**. The volume of the unit cell is then given by

$$V = (\mathbf{A} \times \mathbf{B}) \cdot \mathbf{C}. \tag{1}$$

The location of all other lattice points in a perfect crystalline block of such unit cells (referenced to a corner) may be specified by the vector,

$$\mathbf{r} = n_A \mathbf{A} + n_B \mathbf{B} + n_C \mathbf{C}, \tag{2}$$

where the $n$ are integers of the form

$$n_A = 0, 1, \ldots, N_A - 1$$
$$n_B = 0, 1, \ldots, N_B - 1$$
$$n_C = 0, 1, \ldots, N_C - 1.$$

The total number of lattice points in the block is then $N = N_A N_B N_C$.

Manuscript submitted September 2, 1976.

To describe the diffraction (scattering) phenomena, we introduce the vector,

$$\mathbf{S} = \hat{\mathbf{s}} - \hat{\mathbf{s}}_0, \tag{3}$$

where $\hat{\mathbf{s}}_0$ and $\hat{\mathbf{s}}$ are unit vectors in the direction of the incident and diffracted beams, respectively. For such a three-dimensional array of scattering centers (assuming negligible absorption and rescattering and unit index of refraction), the intensity of the diffracted beam will be essentially that which we would expect from a three-dimensional grating. That is intensity $I$ will be proportional to [1]

$$\frac{\sin^2\left(N_A \frac{\pi}{\lambda} \mathbf{S}\cdot\mathbf{A}\right)}{\sin^2\left(\frac{\pi}{\lambda} \mathbf{S}\cdot\mathbf{A}\right)} \cdot \frac{\sin^2\left(N_B \frac{\pi}{\lambda} \mathbf{S}\cdot\mathbf{B}\right)}{\sin^2\left(\frac{\pi}{\lambda} \mathbf{S}\cdot\mathbf{B}\right)} \cdot \frac{\sin^2\left(N_C \frac{\pi}{\lambda} \mathbf{S}\cdot\mathbf{C}\right)}{\sin^2\left(\frac{\pi}{\lambda} \mathbf{S}\cdot\mathbf{C}\right)} \tag{4}$$

where $\lambda$ is the wavelength of the diffracted beam.

For $N_A$, $N_B$, and $N_C >> 1$, the intensity of the diffracted beam will be strongly peaked and is given by

$$I \propto (N_A N_B N_C)^2 = N^2. \tag{5}$$

The conditions necessary for these maxima to occur are

$$\begin{aligned} \mathbf{S}\cdot\mathbf{A} &= h\lambda \\ \mathbf{S}\cdot\mathbf{B} &= k\lambda \\ \mathbf{S}\cdot\mathbf{C} &= \ell\lambda, \end{aligned} \tag{6}$$

where $h$, $k$, and $\ell$ are integers (known as Miller indices). Now $\mathbf{S}$ is a vector normal to the reflecting plane and of magnitude $2 \sin \theta$ ($\theta$ being one-half the scattering angle); thus, the conditions of Eq. (6) become

$$\begin{aligned} 2A \sin\theta \cos\alpha &= h\lambda \\ 2B \sin\theta \cos\beta &= k\lambda \\ 2C \sin\theta \cos\gamma &= \ell\lambda, \end{aligned} \tag{7}$$

where $\alpha$, $\beta$, and $\gamma$ are the angles between the normal to the reflecting plane and the vectors $\mathbf{A}$, $\mathbf{B}$, and $\mathbf{C}$, respectively. The direction of $\mathbf{S}$ is therefore uniquely defined for given $h$, $k$, and $\ell$, and, further, there is a constant "spacing" of the lattice planes given by

$$D_{hk\ell} = \frac{A}{h} \cos\alpha = \frac{B}{k} \cos\beta = \frac{C}{\ell} \cos\gamma \tag{8}$$

so that our maxima occur for

$$\lambda = 2D_{hk\ell} \sin \theta, \tag{9}$$

which is known as Bragg's law of diffraction. If $h$, $k$, and $\ell$ have a common factor, we arbitrarily remove it, so that

$$d_{h/m,k/m,\ell/m} \equiv mD_{hk\ell}, \tag{10}$$

and Bragg's law becomes

$$m\lambda = 2d_{h/m,k/m,\ell/m} \sin \theta_m, \tag{11}$$

which we may interpret as $m$th-order diffraction from the plane $(h/m, k/m, \ell/m)$ with the appropriate $2d$-spacing.

For the particular case of cubic crystals of one element,

$$D_{hk\ell} = A(h^2 + k^2 + \ell^2)^{-1/2} \tag{12}$$

since **A**, **B**, and **C** are orthogonal and of the same magnitude. For a more general parallelepiped unit cell, $D_{hk\ell}$ and the reflecting plane normal are most easily determined by using the reciprocal lattice. We define vectors

$$\begin{aligned} \mathbf{a} &= (\mathbf{B} \times \mathbf{C})/V \\ \mathbf{b} &= (\mathbf{C} \times \mathbf{A})/V \\ \mathbf{c} &= (\mathbf{A} \times \mathbf{B})/V \end{aligned} \tag{13}$$

so that

$$\mathbf{a}\cdot\mathbf{A} = \mathbf{b}\cdot\mathbf{B} = \mathbf{c}\cdot\mathbf{C} = 1. \tag{14}$$

Then the vector

$$\mathbf{r}_n = h\mathbf{a} + k\mathbf{b} + \ell\mathbf{c} \tag{15}$$

is in the direction of the normal to the reflecting plane $(h, k, \ell)$ and, further,

$$d_{hk\ell} = \frac{1}{|\mathbf{r}_n|}. \tag{16}$$

In practice, for parallelepiped crystals, it is therefore possible to specify an approximate spacing $d$ and to obtain a slab of crystalline material cut and ground so that the surface of the slab is parallel to the reflecting planes.

Because the index of refraction to xrays for most materials is less than unity, i.e., $n = 1 - \delta$ (where $\delta$ is small), Bragg's law, as expressed in Eqs. (9) and (11), is not completely accurate. For wavelengths considerably less than any critical absorption wavelengths [2],

$$\delta \approx \frac{e^2}{2\pi m_e c^2 m_H} \frac{Z}{A} \rho\lambda^2$$

$$\approx 1.36 \times 10^{-6} \rho\lambda^2, \tag{17}$$

where wavelength $\lambda$ is in angstroms and crystal density $\rho$ is in g/cm$^3$. The deviation of the index of refraction from unity is usually small, but for very accurate wavelength determinations, we must modify Bragg's law so that our dispersion relation becomes

$$m\lambda = 2d(1 - \delta/\sin^2 \theta_m) \sin \theta_m \tag{18}$$

where $\theta_m$ is the angle measured in vacuum. The error made by using Bragg's law can be expressed as

$$\frac{\Delta\lambda}{\lambda} = - \frac{\delta}{\sin^2 \theta_m} \approx - 5.44 \times 10^{-6} \rho d^2, \tag{19}$$

which for most materials is $\lesssim 10^{-3}$, far from absorption edges (regions of anomolous dispersion). Nevertheless, if the wavelengths are to be determined very accurately, the modified Eq. (18) must be used in lieu of Bragg's law as expressed in Eqs. (9) and (11).

## 2.2 The Small Crystall

The above equations may be derived solely by the use of physical optics. They are by no means complete, because we also will require a measure of the diffracted intensity. We introduce the differential scattering cross section $d\sigma/d\Omega$, defined by

$$\frac{d\sigma}{d\Omega} = \frac{\text{Energy scattered/time/solid angle}}{\text{Energy incident/time/area}} .$$

The scattering of xrays is due almost completely to electrons, so we consider scattering by an assemblage of electrons located instantaneously at positions $\mathbf{x}_j$. For the case of our small crystalline block (negligible absorption and rescattering and unity index of refraction), the scattering is then given by [3]

$$\frac{I_\Omega}{I_A} \equiv \frac{d\sigma}{d\Omega} = \left\langle \left| \sum_j \frac{e^2}{m_e c^2} e^{(2\pi i/\lambda)\mathbf{s}\cdot\mathbf{x}_j} \right|^2 \right\rangle \sin^2 \Theta, \tag{20}$$

where $\Theta$ is the angle between the observation direction and the electric field vector of the incident radiation. The average is taken over all possible values of $\mathbf{x}_j$ (a time average). (This average will not be important to our treatment here, but such averaging is needed in analysis of temperature effects.) For the case of the electric field perpendicular to the diffraction plane $E^\sigma$, $\sin^2 \Theta = 1$; for the case of the electric field lying in the diffraction plane $E^\pi$, $\sin^2 \Theta = \cos^2 2\theta_m$, $\theta_m$ being the Bragg angle of diffraction. For now we consider only the former case $E^\sigma$.

We now reference the electron positions to the center of the lattice points of Sec. 2.1; then the position of each electron is, from Eq. (2),

$$\mathbf{x} = n_A \mathbf{A} + n_B \mathbf{B} + n_C \mathbf{C} + \mathbf{R}, \tag{21}$$

where $\mathbf{R}$ is the electron position relative to the lattice point or scattering center (atom) to which it belongs. Then the summation in Eq. (20) becomes

$$\sum_j \frac{e^2}{m_e c^2} e^{(2\pi i/\lambda)\mathbf{S}\cdot\mathbf{x}_j} = \frac{e^2}{m_e c^2} \sum_{n_A} e^{(2\pi i/\lambda) n_A \mathbf{S}\cdot\mathbf{A}} \sum_{n_B} e^{(2\pi i/\lambda) n_B \mathbf{S}\cdot\mathbf{B}}$$

$$\cdot \sum_{n_C} e^{(2\pi i/\lambda) n_C \mathbf{S}\cdot\mathbf{C}} \sum_k e^{(2\pi i/\lambda)\mathbf{S}\cdot\mathbf{R}_k}, \tag{22}$$

where we have assumed that the crystalline block consists of atoms of one kind only and where $\mathbf{R}_k$ is the position vector of the $k$th electron in that atom (lattice point) designated by $n_A (= 0, 1, ..., N_A - 1)$, $n_B (= 0, 1, ..., N_B - 1)$, and $n_C (= 0, 1, ..., N_C - 1)$. Since the summations are independent, we may treat each separately. Now,

$$\sum_{n_A=0}^{N_A-1} e^{(2\pi i/\lambda) n_A \mathbf{S}\cdot\mathbf{A}} = \frac{e^{(2\pi i/\lambda) N_A \mathbf{S}\cdot\mathbf{A}} - 1}{e^{(2\pi i/\lambda)\mathbf{S}\cdot\mathbf{A}} - 1}$$

$$= \frac{e^{(\pi i/\lambda) N_A \mathbf{S}\cdot\mathbf{A}} \sin\left(\frac{\pi}{\lambda} N_A \, \mathbf{S}\cdot\mathbf{A}\right)}{e^{(\pi i/\lambda)\mathbf{S}\cdot\mathbf{A}} \sin\left(\frac{\pi}{\lambda} \mathbf{S}\cdot\mathbf{A}\right)} \tag{23}$$

and similarly for the summations over $n_B$ and $n_C$. The summation over $k$ may be replaced by an integral of the form

$$f = \int \rho(\mathbf{R}) e^{(2\pi i/\lambda)\mathbf{S}\cdot\mathbf{R}} \, d^3R, \tag{24}$$

where $\rho(\mathbf{R})$ is the number density of electrons in an atom relative to its center. The quantity $f$ is called the atomic form factor or atomic scattering factor.

By inserting Eqs. (23) and (24) into Eq. (20), we find, for a block consisting of atoms of one kind only, that

$$\frac{I_\Omega^\sigma}{I_A^\sigma} = \left(\frac{e^2}{m_e c^2}\right)^2 |f|^2 \frac{\sin^2\left(N_A \frac{\pi}{\lambda} \mathbf{S}\cdot\mathbf{A}\right)}{\sin^2\left(\frac{\pi}{\lambda} \mathbf{S}\cdot\mathbf{A}\right)} \frac{\sin^2\left(N_B \frac{\pi}{\lambda} \mathbf{S}\cdot\mathbf{B}\right)}{\sin^2\left(\frac{\pi}{\lambda} \mathbf{S}\cdot\mathbf{B}\right)} \frac{\sin^2\left(N_C \frac{\pi}{\lambda} \mathbf{S}\cdot\mathbf{C}\right)}{\sin^2\left(\frac{\pi}{\lambda} \mathbf{S}\cdot\mathbf{C}\right)}. \tag{25}$$

If more than one kind of an atom is contained in our block, we use, in lieu of $f$ in Eq. (25), the structure factor, which follows immediately from the above treatment and Sec. 2.1,

$$F = \sum_j f_f e^{(2\pi i/\lambda)\mathbf{S}\cdot\mathbf{r}_j}, \tag{26}$$

where the sum is over all the atoms in the unit cell. Vector $\mathbf{r}_j$ is defined as

$$\mathbf{r}_j = U_{Aj}\mathbf{A} + U_{Bj}\mathbf{B} + U_{Cj}\mathbf{C}, \tag{27}$$

where $U_{Aj}$, $U_{Bj}$, and $U_{Cj}$ ($\leqslant 1$) are the distances along **A**, **B**, and **C**, respectively, in the unit cell where atom $j$ is found. For diffraction by the plane $(h, k, \ell)$, Eq. (26) becomes

$$F_{hk\ell} = \sum_j f_j e^{2\pi i(hU_{Aj}+kU_{Bj}+\ell U_{Cj})}. \tag{28}$$

Now, the total power in the diffracted beam is just

$$P^\sigma = \int I_\Omega d\Omega.$$

Since the diffracted beam is extremely narrow, we let

$$d\Omega = d\gamma d\beta$$

and

$$\mathbf{S} = \mathbf{S}_B + \delta\mathbf{S},$$

where $\delta\mathbf{S}$ is small and

$$\mathbf{S}_B\cdot\mathbf{A} = h\lambda$$

$$\mathbf{S}_B\cdot\mathbf{B} = k\lambda$$

$$\mathbf{S}_B\cdot\mathbf{C} = \ell\lambda.$$

Then, from Eq. (25),

$$P^{\sigma} = I_A^{\sigma}\left(\frac{e^2}{m_e c^2}\right)^2 |F(2\theta)|^2 \int \frac{\sin^2\left(N_A \frac{\pi}{\lambda}\,\delta\mathbf{S}\cdot\mathbf{A}\right)}{\sin^2\left(\frac{\pi}{\lambda}\,\delta\mathbf{S}\cdot\mathbf{A}\right)} \frac{\sin^2\left(N_B \frac{\pi}{\lambda}\,\delta\mathbf{S}\cdot\mathbf{B}\right)}{\sin^2\left(\frac{\pi}{\lambda}\,\delta\mathbf{S}\cdot\mathbf{B}\right)} \frac{\sin^2\left(N_C \frac{\pi}{\lambda}\,\delta\mathbf{S}\cdot\mathbf{C}\right)}{\sin^2\left(\frac{\pi}{\lambda}\,\delta\mathbf{S}\cdot\mathbf{C}\right)} d\gamma d\beta. \tag{29}$$

This result is for a particular incident angle $\theta$. By using the reciprocal lattice vectors **a**, **b**, and **c** from Eq. (13) and letting

$$\delta\mathbf{S} = \lambda(g_a\mathbf{a} + g_b\mathbf{b} + g_c\mathbf{c}), \tag{30}$$

we find,

$$\frac{\pi}{\lambda}\,\delta\mathbf{S}\cdot\mathbf{A} = \pi g_a, \tag{31}$$

and similarly for the other dot products. We now wish to integrate the power over all incident angles. That is, we wish to find

$$\int P^{\sigma}(\theta)d\theta.$$

Now the element $d\gamma d\beta$ in Eq. (29) is effectively an angular area element in a plane perpendicular to $\hat{\mathbf{s}}$. We may express small changes in $\hat{\mathbf{s}}$ produced by small changes in $\gamma$ and $\beta$ as

$$\delta\hat{\mathbf{s}} = \delta\gamma\hat{\mathbf{e}}_\gamma + \delta\beta\hat{\mathbf{e}}_\beta,$$

where $\hat{\mathbf{e}}_\beta$ is a unit vector perpendicular to the diffraction plane and $\hat{\mathbf{e}}_\gamma$ lies in the diffraction plane. (See Fig. 1.) We note that $\hat{\mathbf{s}}\cdot\delta\hat{\mathbf{s}} = 0$. Now, from Fig. 1 we see that a small displacement in $\theta$ produces a change in $\hat{\mathbf{s}}_0$ of

$$\delta\hat{\mathbf{s}}_0 = -\,\delta\theta\cos 2\theta\hat{\mathbf{e}}_\gamma + \delta\theta\sin 2\theta\hat{\mathbf{e}}_\alpha,$$

where $\hat{\mathbf{e}}_\alpha \equiv \hat{\mathbf{s}}$.

Thus, since $\mathbf{S} = \hat{\mathbf{s}} - \hat{\mathbf{s}}_0$,

$$\delta\mathbf{S} = (\delta\gamma - \delta\theta\cos 2\theta)\hat{\mathbf{e}}_\gamma + \delta\beta\hat{\mathbf{e}}_\beta + \delta\theta\sin 2\theta\hat{\mathbf{e}}_\gamma.$$

So, the volume element in our Cartesian coordinate system ($\hat{\mathbf{e}}_\gamma$, $\hat{\mathbf{e}}_\beta$, $\hat{\mathbf{e}}_\alpha$) is given by

$$d\gamma d\beta d\alpha = d\gamma d\beta d\theta \sin 2\theta. \tag{32}$$

Now $\delta\mathbf{S}$ is also given by Eq. (30), so a differential volume element is also given by

$$[(\lambda\mathbf{a}dg_a) \times (\lambda\mathbf{b}dg_b)]\cdot(\lambda\mathbf{c}dg_c) = \lambda^3(\mathbf{a}\times\mathbf{b})\cdot\mathbf{c}dg_a dg_b dg_c. \tag{33}$$

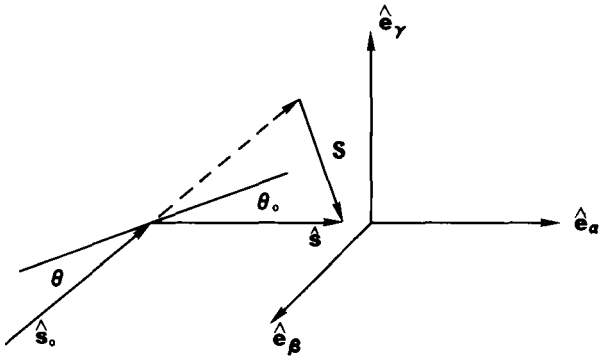


Fig. 1 — The relationship between the ($\hat{e}_\gamma$, $\hat{e}_\beta$, $\hat{e}_\alpha$) coordinate system and the incident and diffracted direction vectors. For appreciable intensity in the diffracted beam, $\theta \approx \theta_0$. Note that $\mathbf{S} = \sin(\theta + \theta_0)\hat{e}_\gamma + \cos(\theta + \theta_0)\hat{e}_\alpha$.

Since diffraction takes place only over a small range of angles, we let $F(2\theta)$ become $F(2\theta_0)$ and $\sin 2\theta$ become $\sin 2\theta_0$, where $\theta_0$ is the diffraction maximum. From Eqs. (31), (32), and (33), the integral of the power over all incident angles is given by

$$\int P^\sigma(\theta)d\theta = I_A^\sigma \left(\frac{e^2}{m_e c^2}\right)^2 |F(2\theta_0)|^2 \lambda^3 \frac{(\mathbf{a} \times \mathbf{b})\cdot\mathbf{c}}{\sin 2\theta_0}$$

$$\times \int dg_a dg_b dg_c \frac{\sin^2(N_A \pi g_A)}{\sin^2(\pi g_a)} \frac{\sin^2(N_B \pi g_b)}{\sin^2(\pi g_b)} \frac{\sin^2(N_C \pi g_c)}{\sin^2(\pi g_c)} . \tag{34}$$

For $N_A$, $N_B$, and $N_C >> 1$, the $\sin^2$ terms in the denominator become their argument and the integrals may be extended to $\pm\infty$. Equation (34) then becomes

$$\int P^\sigma(\theta)d\theta = I_A^\sigma \left(\frac{e^2}{m_e c^2}\right)^2 |F(2\theta_0)|^2 \lambda^3 \frac{N_A N_B N_C}{V \sin 2\theta_0} . \tag{35}$$

If $n$ is the number of unit cells per unit volume, we find that

$$\int P^\sigma(\theta)d\theta = I_A^\sigma \left(\frac{e^2}{m_e c^2}\right)^2 |F(2\theta_0)|^2 \lambda^3 \frac{n^2(\text{vol})}{\sin 2\theta_0} \tag{36}$$

where (vol) is the volume of our crystalline block. This discussion is found to apply very well to "powder diffraction," where many small crystals are employed.

## 2.3 The Mosaic Crystal

We now consider a large crystal composed of small blocks of the type discussed in Sec. 2.2. The blocks are assumed optically decoupled from one another, and the entire

crystal is assumed to be so thick that no radiation is transmitted through (mosaic crystal). In this case, absorption of incident and diffracted xrays must be taken into account. We therefore introduce an attenuation coefficient into the intensity relation:

$$\int \frac{dP^{\sigma}(\theta)}{d(\mathrm{vol})}\, d\theta \int e^{-2\mu z \csc\theta_0} \csc\theta_0 dz dA = I_A^{\sigma} \left(\frac{e^2}{m_e c^2}\right)^2 |F(2\theta_0)|^2 \lambda^3 \frac{n^2 A}{2\mu \sin 2\theta_0} \tag{37}$$

where $\mu$ is the linear absorption coefficient and $A$ is the cross-sectional area of the incident beam, and we have used Eq. (36). Now the total energy per time incident to our crystal is $I_0^{\sigma} = I_A^{\sigma} A$. Then, for the special case of the mosaic crystal,

$$\int P^{\sigma}(\theta) d\theta = I_0^{\sigma} \left(\frac{e^2}{m_e c^2}\right)^2 |F(2\theta_0)|^2 \frac{\lambda^3 n^2}{2\mu \sin 2\theta_0} \,. \tag{38}$$

Note that if we accumulate diffracted radiation $E$, as a crystal is rotated at constant angular velocity $\omega$, we find that

$$E = \int P(\theta) dt = \omega^{-1} \int P(\theta) d\theta. \tag{39}$$

The ratio $E\omega/I_0$ is known as the integrated reflection coefficient, integrated reflectivity, or, more loosely, reflectivity from a crystal face $R_0$.

Inserting now the polarization dependence, from Eq. (20) and the following discussion, we find that for the mosaic crystal,

$$R_0^{\sigma} = \frac{E^{\sigma}\omega}{I_0^{\sigma}} = \left(\frac{e^2}{m_e c^2}\right)^2 |F(2\theta_0)|^2 \frac{\lambda^3 n^2}{2\mu \sin 2\theta_0} \tag{40a}$$

and

$$R_0^{\pi} = \frac{E^{\pi}\omega}{I_0^{\pi}} = R_0^{\sigma} \cos^2 2\theta_0. \tag{40b}$$

These equations are incomplete, however, since they consider neither secondary nor primary extinction. Both forms of extinction occur for angles of incidence near the Bragg angle; i.e., they are diffraction processes. Primary extinction takes place within a small block and is due to the reduction of incident beam intensity at a given layer in the block by previous diffraction of other layers and by interference between the incident beam and the rescattered diffracted beam. Secondary extinction takes place because the beam incident to a small block has been depleted by diffraction of other (previous) blocks; interference does not occur because the small blocks are optically decoupled in a mosaic crystal.

## 2.4 The Perfect Crystal

Diffraction from a large perfect crystal must properly take into account absorption, index of refraction, and rescattering of the diffracted beam. To do this, we depart from the above procedure* and consider a plane sheet of similar atoms regularly spaced. We let a plane-parallel incident beam strike the plane at an angle $\theta$. The beam is then diffracted from the plane at essentially the same angle.

We let the plane of atoms be the $x - y$ plane; the position of each atom in the plane is then given by a position vector, so that

$$\mathbf{r} = x\hat{\mathbf{e}}_x + y\hat{\mathbf{e}}_y. \tag{41}$$

We let the $y - z$ plane be the diffraction plane. Then the incident beam is described by a wave vector, such that

$$\kappa = \frac{2\pi}{\lambda}\,(\cos\theta\,\hat{\mathbf{e}}_y - \sin\theta\,\hat{\mathbf{e}}_z). \tag{42}$$

Incident to each atom, then, we have wave radiation of the form

$$A_0 e^{i(\omega t - \kappa\cdot\mathbf{r})} = A_0 e^{i(\omega t - \kappa y\cos\theta)} \tag{43}$$

where $\omega = 2\pi c/\lambda$ and $A_0$ is the amplitude of the incident beam. Each scatterer (atom) will scatter the incident beam in all directions in the form of a spherical wave. The amplitude of the scattered wave will be ($\sigma$-radiation only, i.e., $E^\sigma$ is perpendicular to the diffraction plane)

$$-A_0 f(2\theta)\,\frac{e^2}{m_e c^2}\,\frac{e^{i(\omega t - \kappa y\cos\theta - \kappa\rho)}}{\rho} \tag{44}$$

at a distance $\rho$ from the scatterer. If we now observe the scattered radiation at a point in the diffraction plane at an angle $\theta$ above the plane of scatterers and a distance $R$ from the origin (i.e., the position vector of the observation point is $\mathbf{R} = R\,(\cos\theta\,\hat{\mathbf{e}}_y + \sin\theta\,\hat{\mathbf{e}}_z)$) we find that

$$\rho = [R^2 + r^2 - 2Ry\cos\theta]^{1/2}. \tag{45}$$

Now $R \gg r$ and for our purposes the factor $\rho$ in the denominator of Eq. (44) becomes simply $R$. This simple substitution may not be made in the argument of the exponential term, however. For this purpose we expand Eq. (45), finding (to second order in $r$ and $y$)

$$\rho \approx R - y\cos\theta + r^2(1 - \sin^2\phi\cos^2\theta)/2R \tag{46}$$

*The procedure we employ is similar to that of R. W. James, *The Optical Principles of the Diffraction of X-Rays*, Vol. II of *The Crystalline State* Sir L. Bragg, ed., pp. 52-66, Cornell University Press, Ithaca, New York, 1965.

where we have substituted $r \sin\phi$ for $y$. The amplitude of the scattered beam from one scatterer, given by Eq. (44), is now

$$-A_0 f(2\theta) \frac{e^2}{m_e c^2} \frac{e^{i[\omega t - \kappa R - \kappa r^2(1-\sin^2\phi\cos^2\theta)/2R]}}{R} \tag{47}$$

We define

$$q_s = \frac{\text{amplitude of the scattered beam from a single scatterer}}{\text{amplitude of the incident beam}} . \tag{48}$$

We then see that the total contribution at our observation point due to all the scatterers in the $x - y$ plane is

$$q = N \int_0^{2\pi} \int_0^{\infty} q_s r dr d\phi, \tag{49}$$

where $N$ is the area density of scatterers and we have assumed the plane sheet of scatterers to be large. From Eqs. (47) and (49), we find that

$$q = -Nf(2\theta) \frac{e^2}{m_e c^2} \frac{e^{i(\omega t - \kappa R)}}{R} \int_0^{2\pi} \int_0^{\infty} e^{-(i\kappa r^2/2R)(1-\sin^2\phi\cos^2\theta)} r dr d\phi. \tag{50}$$

The integrals are quite straightforward and yield

$$q = iNf(2\theta) \frac{e^2}{m_e c^2} e^{i(\omega t - \kappa R)} \frac{2\pi}{\kappa \sin\theta}$$

which is again a plane wave. This equation can be rewritten as

$$q = indf(2\theta) \frac{e^2}{m_e c^2} \frac{\lambda}{\sin\theta} e^{i(\omega t - \kappa R)} \tag{51}$$

where we have replaced $\kappa$ by $2\pi/\lambda$ and $N$ by $nd$ (the product of the number density of scatterers and the distance between planes of scatterers). If we translate back to the origin ($R = 0$) and ignore the time factor (an unnecessary complication in the following treatment), we have finally, for the ratio of diffracted to incident amplitudes (including the effect of a phase lag of very nearly $\pi/2$, which takes place on reflection),

$$-iq = i(nd\lambda/\sin\theta) f(2\theta) \left( \frac{e^2}{m_e c^2} \right). \tag{52}$$

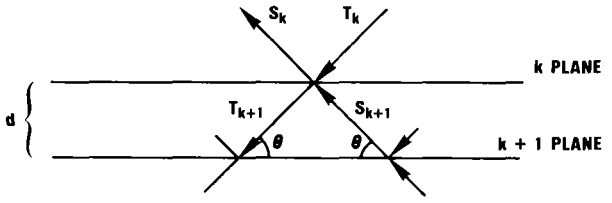


Fig. 2 — Relationship between the reflected, incident, and transmitted amplitudes and the reflection planes

The same sort of development of the ratio of the amplitudes of the forward scattered and the incident beams gives

$$-iq_0 = i(nd\lambda/\sin\theta)f(0)\left(\frac{e^2}{m_e c^2}\right). \tag{53}$$

Let us now consider a crystal composed of many layers of such planes, strictly parallel, and with all scatterers in register. Let $T_k$ be the incident amplitude to the $k$th plane and $S_k$ be the total amplitude of the scattered waves from all planes $\ell \geqslant k$. The fraction transmitted by each plane is $(1 - iq_0)$; the fraction reflected is $-iq$. Then, as shown in Fig. 2,

$$S_k = -iqT_k + (1 - iq_0)e^{-(i2\pi/\lambda)d\sin\theta} S_{k+1} \tag{54}$$

and

$$T_k = (1 - iq_0)e^{-(i2\pi/\lambda)d\sin\theta}\, T_k - i\bar{q}e^{-(i2\pi/\lambda)2d\sin\theta} S_{k+1} \tag{55}$$

where we have included phase factors to account for the distance $d$ between planes (assuming plane-parallel radiation), and $\bar{q}$, rescattering from the reverse side of plane $k$. These two equations lead to an equation for the transmission amplitudes only and another for the scattered amplitudes only. Then setting

$$T_{k+1} = xT_k \quad \text{and} \quad S_{k+1} = yS_k$$

(where $|x|$ and $|y|$ are assumed to be very nearly, but less than, unity) we find,

$$(1 - iq_0)\left(\frac{1}{x} + x\right) = q\bar{q}e^{-(i2\pi/\lambda)d\sin\theta} + (1 - iq_0)^2 e^{-(i2\pi/\lambda)d\sin\theta} + e^{(i2\pi/\lambda)d\sin\theta} \tag{56}$$

and an identical equation for $y$. From our assumptions, $x = y$, and therefore also $S_{k+1} = xS_k$. If we assume that $\theta$ is nearly the Bragg angle for the wavelength of the incident radiation, the phase factor becomes

$$e^{-(i2\pi/\lambda)d\sin\theta} = e^{-im\pi - iv} \tag{57}$$

where $v$ is small so that

$$e^{-iv} \approx 1 - iv. \tag{58}$$

Also, since $|x|$ is nearly unity,

$$x \approx (1 - \xi)e^{-im\pi}. \tag{59}$$

Substituting for $x$ in Eq. (56), we find

$$\xi^2 \approx q\overline{q} - (q_0 + v)^2 \tag{60}$$

Using $S_{k+1} = xS_k$ and $T_{k+1} = xT_k$ yields

$$S_0 = -iqT_0 + (1 - iq_0)e^{-i(m\pi+v)}xS_0.$$

Thus the ratio of diffracted amplitude $S_0$ and incident amplitude $T_0$ is, from Eqs. (58), (59), and (60),

$$\frac{S_0}{T_0} = \frac{-iq}{1 - (1 - iq_0)(1 - iv)[1 \pm \sqrt{q\overline{q} - (q_0 + v)^2}]} \approx \frac{-q}{q_0 + v \pm \sqrt{(q_0 + v)^2 - q\overline{q}}}. \tag{61}$$

The ratio of diffracted to incident intensity is then just $|S_0/T_0|^2$, and we choose the sign of the radical to guarantee that the reflection coefficient is

$$R^{\sigma}(v) = |S_0/T_0|^2 \leqslant 1. \tag{62}$$

We now consider the special case of negligible absorption. If the crystal does not absorb, $q = \overline{q}$ and $q_0$ and $q$ are real. Then,

$$\frac{S_0}{T_0} = \frac{-q}{q_0 + v \pm \sqrt{(q_0 + v)^2 - q^2}} \tag{63}$$

and for $|q_0 + v| \leqslant q$,

$$R^{\sigma}(v) = 1. \tag{64}$$

Again, outside of this region the sign of the radical is chosen to ensure the validity of Eq. (62). Note that the peak of $R^{\sigma}(v)$ occurs for $v = -q_0$. If $\theta_0$ is the Bragg angle, the peak occurs for an angle $\theta_0 + \Delta\theta$, where

$$\Delta\theta = \frac{nd\lambda|f(0)|(e^2/m_e c^2)}{\frac{2\pi d}{\lambda}\cos\theta_0 \sin\theta_0}$$

$$= \frac{\delta}{\sin\theta_0 \cos\theta_0}, \tag{65}$$

corresponding to the modification of Bragg's law expressed in Eq. (18). The width is approximately

$$\Delta v = -2q.$$

This corresponds to an angle

$$\delta\theta = 2\Delta\theta \ \frac{q}{q_0} \ .$$

Then, for $\sigma$-polarization,

$$\delta\theta^{\sigma} = 2\Delta\theta \left| \frac{f(2\theta)}{f(0)} \right| \tag{66}$$

and for $\pi$-polarization, the angular width is

$$\delta\theta^{\pi} = 2\Delta\theta \left| \frac{f(2\theta)}{f(0)} \right| \ |\cos 2\theta|. \tag{67}$$

For negligible absorption, the integrated reflection coefficients are then given by

$$\int R(\theta) d\theta = \frac{4}{3} \ \delta\theta,$$

where the factor 4/3 comes from the additional contribution of Eq. (63) in the wings. Then we see that

$$\int R^{\sigma}(\theta) d\theta = \frac{8}{3\pi} \ \frac{n\lambda^2}{\sin 2\theta_0} \ |f(2\theta_0)| \ \frac{e^2}{m_e c^2} \tag{68a}$$

$$\int R^{\pi}(\theta) d\theta = \frac{8}{3\pi} \ \frac{n\lambda^2}{\sin 2\theta_0} \ |f(2\theta_0)| \ \frac{e^2}{m_e c^2} \ |\cos 2\theta_0|. \tag{68b}$$

these are Darwin's formulas for the integrated reflection coefficients of a perfect crystal [4].

The Prins modification of Darwin's treatment includes absorption by allowing $\delta$, $q_0$, $q$, and $\overline{q}$ to be complex [5]. Then

$$\delta \rightarrow \delta + i\beta$$

where

$$\beta = \lambda\mu/4\pi$$

($\mu$ being the linear absorption coefficient). Now

$$-(\delta + i\beta) = \frac{q_0 \sin\theta_0}{\frac{2\pi}{\lambda} d} \tag{69}$$

and we can set

$$-(A + iB) = \frac{q \sin\theta}{\frac{2\pi}{\lambda} d}$$

and

$$-(\overline{A} + i\overline{B}) = \frac{\overline{q} \sin\theta}{\frac{2\pi}{\lambda} d} . \tag{70}$$

Setting $\Delta\theta = \theta - \theta_0$ (small), we see that

$$\cos\theta_0 \sin\theta_0 \Delta\theta = \frac{v \sin\theta_0}{\frac{2\pi}{\lambda} d} . \tag{71}$$

Then, by substituting Eqs. (69), (70), and (71) into Eq. (61), we find

$$\frac{S_0}{T_0} = \frac{A + iB}{C \pm \sqrt{C^2 - (A + iB)(\overline{A} + i\overline{B})}} \tag{72}$$

where $C = \cos\theta_0 \sin\theta_0 \Delta\theta - \delta - i\beta$. For the case of a composite crystal containing more than one kind of atom, $f$ is replaced by $F$ (Eq. (28)) in $q_0$, $q$, and $\overline{q}$, so that $\delta$, $\beta$, $A$, $B$, $\overline{A}$, and $\overline{B}$ are also modified.

For a nonpolar crystal $q = \overline{q}$ and $A + iB = \overline{A} + i\overline{B}$. Thus

$$R_0^\sigma = \int R^\sigma(\theta) d\theta = \frac{2\delta}{\sin 2\theta_0} \left| \frac{F(2\theta_0)}{F(2\theta)} \right| \int \left| \frac{1 + iB/A}{\eta - \frac{i\beta}{A} \pm \sqrt{\left(\eta - \frac{i\beta}{A}\right)^2 - \left(1 + \frac{i\beta}{A}\right)^2}} \right|^2 d\eta \tag{73a}$$

(where the polarization factor in $A$ and $B$ has been set equal to unity), and

$$R_0^\pi = R_0'^\sigma \, |\cos 2\theta_0| \tag{73b}$$

where $R_0'^{\sigma}$ is of the same form as $R_0^{\sigma}$ but $A$ and $B$ now include the polarization factor $|\cos 2\theta_0|$.

Some actual crystals seem to be described quite well by the perfect crystal description given here, especially when Eqs. (62), (72), and (73) are applied.

### 2.5 Discussion of Theory

It is not our intent to vigorously derive the theories of crystal diffraction, nor to include every aspect of crystal diffraction; for these and other discussions the reader is referred to the appropriate literature,* from which much of the above material has been taken.

Constructing an x-ray spectrometer instrument that takes advantage of the dispersion relation (Bragg's law) is quite simple. We are afforded, potentially, a great deal of flexibility in the choice of crystal and of atomic plane spacing, so the wavelength range of interest can also be matched, within limits. It is therefore possible to determine which lines are present and the ratio of line radiation to continuum in the neighborhood of the lines.

Unfortunately, we have at least two markedly different theories (mosaic and perfect) defining the integrated reflection coefficient, only one of which (perfect) defines a reflectivity curve. It is thus impossible to determine the spectrum of the incident radiation from diffraction theory unless one knows which (if either) idealized theory pertains and knows the structure factors (including temperature effects, not included here). One must therefore determine for each crystal those parameters required.

In the following, we explore the expected results obtained by a Bragg crystal spectrometer for various types of sources and ways of experimentally determining the parameters needed to define the incident source spectrum.

## 3. INTERACTION OF SOURCE, CRYSTAL, AND DETECTOR

The typical arrangement of a Bragg crystal spectrometer is shown in Fig. 3. The atomic planes of the crystal are oriented at an angle $\theta$ to the incident beam; the detector is at an angle $2\theta$ to the incident beam and views the diffracted radiation from the crystal.

From the theory described earlier, diffraction from a crystal depends on the polarization state of the incident radiation. We will see that in some respects this is a complication, but nevertheless it is potentially useful for determining the state of polarization of the source. In any case, we must find some means for treating it. A further complication is that few x-ray sources are monochromatic, and it is nearly impossible to obtain one

*Good texts on the subject of x-ray diffraction by crystals are R. W. James, *The Optical Principles of the Diffraction of X-Rays,* Vol. II of *The Crystalline State* Sir L. Bragg, ed., Cornell University Press, Ithaca, New York, 1965); and A. H. Compton and S. K. Allison, *X-Rays in Theory and Experiment,* 2d ed., D. Van Nostrand Company, Inc., Princeton, New Jersey, 1935. A more elementary treatment is given in A. Guinier, *X-Ray Diffraction,* H. W. Freeman and Company, San Francisco, 1963.

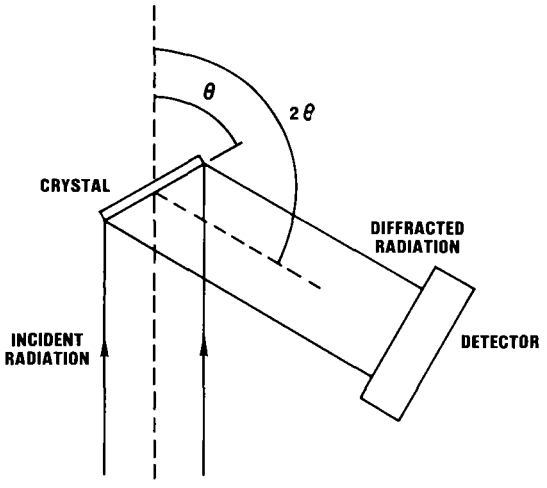


Fig. 3 — Typical arrangement of crystal and detector of a Bragg crystal spectrometer

that is not divergent. In the following treatment, we will find that the characteristics of our spectrometer that must be determined in the laboratory are (a) the quantum efficiency of the detector; (b) the integrated reflection coefficient; (c) the reflectivity curve; (d) the polarization dependence; (e) the atomic plane spacing; and (f), for very accurate identification of spectral features, the index of refraction. The means by which the quantum efficiency of a detector may be determined is similar to that dealt with at some length in Meekins et al. [6] and will not be further considered here; we will assume the detector efficiency to be known. In addition, atomic plane spacing $d$ and index of refraction may be obtained to sufficient accuracy by least-squares fitting techniques applied to known laboratory spectra. Thus, they also will not be further considered; we will assume them to be known.

In the following, we will demonstrate the need for the above spectrometer characteristics (or lack of them) when dealing with specific sources as well as the methods for their determination in the laboratory. We first devise a means for treating rotations when we have a polarized source.

### 3.1 Polarization and Rotations

Consider a source emitting linearly polarized radiation. We may describe the radiation using amplitudes, which we take as parallel (||) and perpendicular (⊥) polarization in some reference frame. We thus describe the sources as

$$\mathscr{X} = \begin{pmatrix} C_{\parallel} \\ C_{\perp} \end{pmatrix} . \tag{74}$$

If we simply view the source with a detector having unit efficiency to both ∥ and ⊥ components, we in fact find an intensity, flux, or power, which is

$$P = \mathscr{X}^{\dagger}\mathscr{X} = C_{\parallel}^2 + C_{\perp}^2. \tag{75}$$

Suppose we have a detector sensitive to linear polarization, oriented so that the source and detector reference frames are coaligned. A workable representation of the detector response is then

$$\mathscr{E} = \begin{pmatrix} \epsilon_{\parallel} & 0 \\ 0 & \epsilon_{\perp} \end{pmatrix} \tag{76}$$

where the $\epsilon$ are detector efficiencies. Then the intensity as seen by the detector is

$$P = \mathscr{X}^{\dagger}\mathscr{E}\mathscr{X} = C_{\parallel}^2\epsilon_{\parallel} + C_{\perp}^2\epsilon_{\perp} \tag{77}$$

Also, in our formalism, we will require the description of rotations. Since amplitudes transform as vectors, a rotation of $\psi$ about the direction of propagation is described as,

$$\mathscr{U}_{\psi} = \begin{pmatrix} \cos\psi & \beta\sin\psi \\ \gamma\sin\psi & \cos\psi \end{pmatrix} \tag{78}$$

where we must determine $\beta$ and $\gamma$. We have set the coefficients of the $\cos\psi$ terms equal to 1 so that $\mathscr{U}_{\psi} = 1$ for $\psi = 0$. Now $\mathscr{U}_{\psi}$ must be unitary, so that

$$|\beta|^2 = |\gamma|^2 = 1$$

and

$$\gamma^* = -\beta.$$

Now, suppose we perform a rotation between the detector and source. Then,

$$P = \mathscr{X}^{\dagger}\mathscr{U}_{\psi}^{\dagger}\mathscr{E}\mathscr{U}_{\psi}\mathscr{X}$$

or

$$P = \epsilon_{\parallel}[C_{\parallel}^2\cos^2\psi + C_{\perp}^2\sin^2\psi + C_1C_2(\beta^* + \beta)\sin\psi\cos\psi] + \epsilon_{\perp}[C_{\parallel}^2\sin^2\psi + C_{\perp}^2\cos^2\psi$$
$$- C_1C_2(\beta^* + \beta)\sin\psi\cos\psi].$$

From the Law of Malus, we know that the dependence of intensity on angle of rotation $\psi$ is of the form $\sin^2\psi$ and $\cos^2\psi$, *not* $\sin\psi\cos\psi$. So $\beta^* = -\beta$, and we choose $\beta = i$ so that counterclockwise rotations may be considered positive. We also find that circular polarization may be treated by allowing $\psi$ to be a function of time. X-ray measurements are usually made over times that are long in comparison to the cycle time of $\psi$, however, and therefore time averages of $\cos^2\psi$ and $\sin^2\psi$ must be taken, leaving us with ($C_{\perp} = 0$),

$$P = \frac{1}{2}(\epsilon_{\parallel} + \epsilon_{\perp})C_{\parallel}^2$$

i.e., no information on the polarization.

We now insert a polarizer (e.g., crystal), which in its own reference frame is described by

$$\mathscr{K} = \begin{pmatrix} A_{\parallel} & 0 \\ 0 & A_{\perp} \end{pmatrix} \tag{79}$$

i.e., diagonal, since it cannot mix polarization states if the source polarization reference frame is the same as that of the polarizer. If we now use a source, a polarizer, and a detector (which is rotated by $\psi$ with respect to the polarization reference frame of the polarizer and source), we find that the intensity is

$$P = \mathscr{X}^{\dagger}\mathscr{K}^{\dagger}\mathscr{U}_{\psi}^{\dagger}\mathscr{E}\mathscr{U}_{\psi}\mathscr{K}\mathscr{X},$$

and we conclude that $A_{\parallel}$ and $A_{\perp}$ have the same phase, which we set equal to zero so that $A_{\parallel}$ and $A_{\perp}$ are real.

Normally, the x-ray detector itself is not sensitive to polarization, so that

$$\mathscr{E} = \epsilon \mathbf{1}. \tag{80}$$

Then, for the general case of a multicomponent system with rotations $\psi_1, \psi_2, \ldots, \psi_n$ between polarizers and source, we would have

$$P = \epsilon |\mathscr{K}_n \mathscr{U}_{\psi_n} \ldots \mathscr{K}_1 \mathscr{U}_{\psi_1} \mathscr{X}|^2. \tag{81}$$

In the following, we will consider two configurations: 1. A source, a crystal (rotated), and a detector (Fig. 4); for this case,

$$\begin{aligned} P(e^{i\psi}) &= \epsilon |\mathscr{K}\mathscr{U}_{\psi}\mathscr{X}|^2 \\ &= \epsilon A_{\parallel}^2 (C_{\parallel}^2 \cos^2\psi + C_{\perp}^2 \sin^2\psi) \\ &\quad + \epsilon A_{\perp}^2 (C_{\parallel}^2 \sin^2\psi + C_{\perp}^2 \cos^2\psi) \end{aligned} \tag{82}$$

2. A source, two crystals (the second rotated), and a detector (Fig. 5); in this case,

$$\begin{aligned} P(1, e^{i\psi}) &= \epsilon |\mathscr{K}_B \mathscr{U}_{\psi} \mathscr{K}_A \mathscr{X}|^2 \\ &= \epsilon B_{\parallel}^2 (A_{\parallel}^2 C_{\parallel}^2 \cos^2\psi + A_{\perp}^2 C_{\perp}^2 \sin^2\psi) \\ &\quad + \epsilon B_{\perp}^2 (A_{\parallel}^2 C_{\parallel}^2 \sin^2\psi + A_{\perp}^2 C_{\perp}^2 \cos^2\psi) \end{aligned} \tag{83}$$

where we have indicated the rotations of each crystal by $e^{i\psi}$ and parameters of the second crystal by $B_{\parallel}$ and $B_{\perp}$.

We see that the treatment of polarization effects and the interaction of rotations about the incident beam are straightforward with the use of these matrix operators.

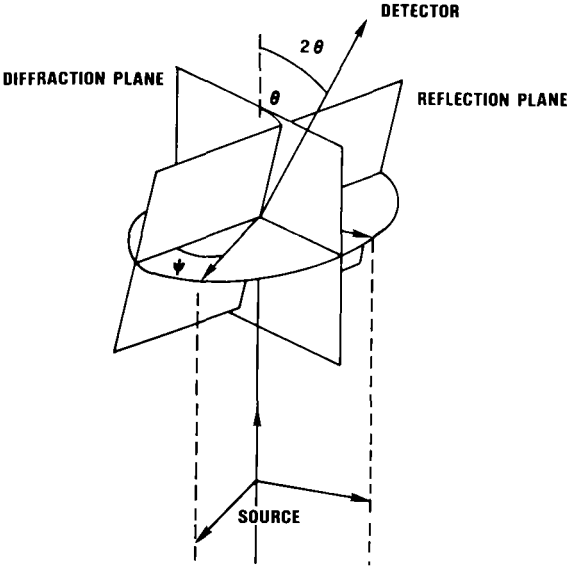


Fig. 4 — Diagram of the polarization reference frame and a rotated crystal. The crystal is represented by the reflection plane. The diffraction plane contains both the incident and diffracted x-ray beams and is normal to the reflection plane.

### 3.2 The Source, Crystal, and Detector: Operator Approach

We will describe the source as seen by our detector or crystal by a function $S_{\lambda t\delta}$ in units of photons per time per wavelength interval per (angle)$^2$. The principal direction will be along the x-axis, so divergence angle vector $\delta$ lies in the $y - z$ plane. We insist that the centroid of the incident radiation and the x-axis be coincident, so that

$$\int \delta S_{\lambda t\delta} d\delta_y d\delta_z = 0. \tag{84}$$

As noted above, diffraction from a crystal depends on the state of polarization of the incident beam and its orientation. Whenever this must be considered we will write

$$S_{\lambda t\delta} = S^{\parallel}_{\lambda t\delta} + S^{\perp}_{\lambda t\delta}. \tag{85}$$

Source function $S$ is related to the amplitudes of Sec. 3.1 by

$$\begin{aligned} S^{\parallel}_{\lambda t\delta} &\equiv C^2_{\parallel} \\ S^{\perp}_{\lambda t\delta} &\equiv C^2_{\perp}. \end{aligned} \tag{86}$$

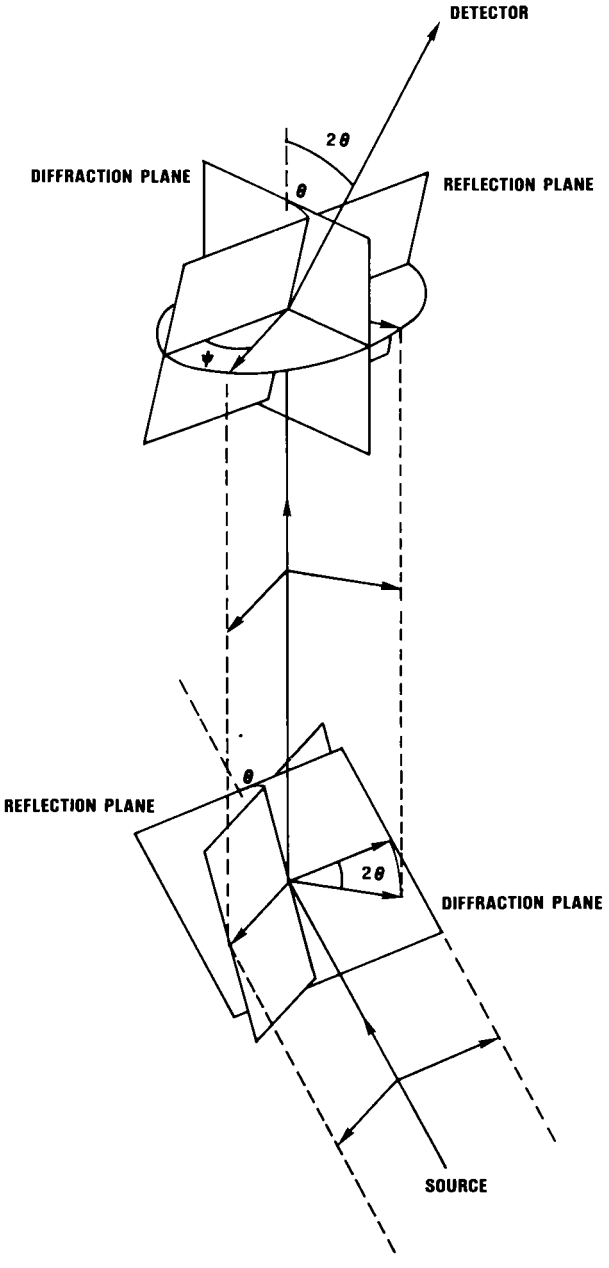


Fig. 5 — Diagram of the polarization reference frame resulting from diffraction by one crystal and a second, rotated, crystal. The crystals are represented by the reflection planes. The diffraction planes contain both the incident and diffracted x-ray beams of each crystal, and each diffraction plane is normal to its associated reflection plane.

In nearly all cases, it is possible to restrict the divergence of the source to very small angles, so that we may describe a specific ray incident on our crystal or detector by a unit vector:

$$\hat{\mathbf{n}} \approx \left(1 - \frac{\delta_y^2 + \delta_z^2}{2}\right)\hat{\mathbf{e}}_x + \delta_y \hat{\mathbf{e}}_y + \delta_z \hat{\mathbf{e}}_z . \tag{87}$$

Over a small range of incident angles, the quantum efficiency of most x-ray detectors is constant and independent of polarization. Thus, if we view an x-ray source with a detector, we would observe

$$n_t = \int \epsilon(\lambda) S_{\lambda t \delta} d\lambda d\delta_y d\delta_z \tag{88}$$

in units of photons per time. Thus, we may describe the detector with a detector operator identical for both polarization states:

$$E \equiv \int \epsilon(\lambda) d\lambda dq_y dq_z \tag{89}$$

where $dq_y dq_z$ indicates integration over all incident angles.

From the earlier discussions, we know that diffraction from a crystal depends on the angle between the atomic planes and the incident x-ray beam, and that the peak intensity of the diffracted beam occurs when Bragg's law (Eq. (11)) (or small departures therefrom) holds true, i.e., when

$$m\lambda \approx 2d \sin\theta_m .$$

Even with an incident beam with no divergence, there is a small spray of radiation diffracted. There is also a small range of incident angles over which diffraction takes place (albeit not at peak intensity). Referring to Fig. 6, we let the principal direction (centroid) be along $\hat{\mathbf{e}}_x$; the normal to the atomic planes is then represented by

$$\hat{\mathbf{N}} = \cos\alpha \hat{\mathbf{e}}_x + \sin\alpha \hat{\mathbf{e}}_y \tag{90}$$

so that $\hat{\mathbf{e}}_z$ lies in the atomic (reflection) plane and normal to the principal directions of both incident and diffracted beams. If we represent the incident beams by Eq. (87), the total diffracted intensity over all diffracted angles will be proportional to a function (to first order in $\delta_y$, $\delta_z$, and $\theta - \varphi$)$Q(\theta(\lambda) - \varphi - \delta_y)$, where $\theta(\lambda) = \sin^{-1}(m\lambda/2d)$ and $\varphi = \pi/2 - \alpha$. Referring to Fig. 7, we let the principal direction of the diffracted beam be $\hat{\mathbf{e}}_x$. Due to mirroring at the crystal, the small divergence angles $\delta_y$, $\delta_z$ become $-\delta_y$, $-\delta_z$ upon diffraction. Then to describe the ray of the diffracted beam we use

$$\hat{\mathbf{n}}_D = (\eta_y - \delta_y)\hat{\mathbf{e}}_y + (\eta_z - \delta_z)\hat{\mathbf{e}}_z + \left[1 - \frac{(\eta_y - \delta_y)^2 + (\eta_z - \delta_z)^2}{2}\right]\hat{\mathbf{e}}_x \tag{91}$$

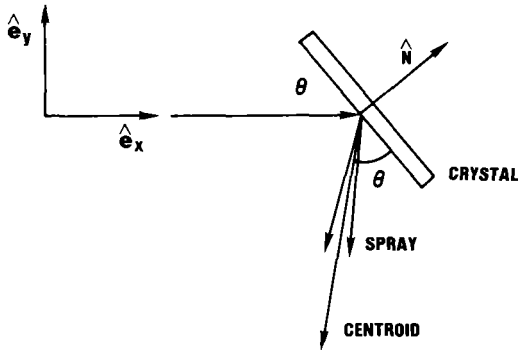


Fig. 6 — Incident and diffracted beams of a crystal, showing the crystal normal and the diffracted spray about the centroid.

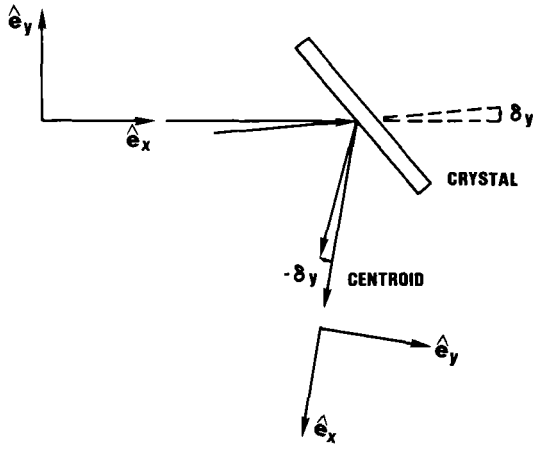


Fig. 7 — Incident and diffracted reference frames. The divergence angle becomes negative on reflection.

where $\eta_y$ and $\eta_z$ are the spray angles in the corresponding directions for a nondivergent incident beam. Then, to first order in angle, the spread about the centroid may be described by the function $\overline{Q}[(\eta_y - \delta_y)\hat{e}_y + (\eta_z - \delta_z)\hat{e}_z]$. We arbitrarily employ the normalization and centroid conditions,

$$\int Q(x)dx = 1 \tag{92-a}$$

$$\int xQ(x)dx = 0 \tag{92-b}$$

$$\int \overline{Q}(y\hat{\mathbf{e}}_y + z\hat{\mathbf{e}}_z)dydz = 1 \tag{92-c}$$

and

$$\int (y\hat{\mathbf{e}}_y + z\hat{\mathbf{e}}_z)\overline{Q}(y\hat{\mathbf{e}}_y + z\hat{\mathbf{e}}_z)dydz = 0. \tag{92-d}$$

Then our entire diffraction function is

$$Q[\theta(\lambda) - \varphi - \delta_y] \cdot R_0(\lambda) \cdot \overline{Q}[(\eta_y - \delta_y)\hat{\mathbf{e}}_y + (\eta_z - \delta_z)\hat{\mathbf{e}}_z],$$

where $R_0(\lambda)$ is a normalization factor and is a local constant.

Suppose we have a spectrometer having diffraction characteristics described by our diffraction function and a detector of unit efficiency. We irradiate the crystal with a monochromatic, nondivergent source of the form

$$S_{\lambda t\delta} = S_t \delta(\lambda - \lambda_0)\delta(\delta_z)\delta(\delta_y).$$

Then the observed count rate will be

$$\begin{aligned} n_t = S_t \int & \delta(\lambda - \lambda_0)\delta(\delta_z)\delta(\delta_y)d\delta_y d\delta_z \\ & \cdot Q(\theta(\lambda) - \varphi - \delta_y)R_0(\lambda)\overline{Q}[(\eta_y - \delta_y)\hat{\mathbf{e}}_y + (\eta_z - \delta_z)\hat{\mathbf{e}}_z] \\ & \cdot d\lambda d(\eta_y - \delta_y)d(\eta_z - \delta_z) \\ = & S_t R_0(\lambda_0)Q(\theta(\lambda_0) - \varphi). \end{aligned}$$

If we now rotate the crystal at a uniform rate $d\varphi/dt = \omega$, we find that the total number of photons contained in the diffracted line is

$$n = \omega^{-1} S_t R_0(\lambda_0).$$

Then

$$R_0(\lambda_0) = \frac{n\omega}{S_t} \tag{93}$$

which we may use as an experimental definition of the integrated reflection coefficient, in agreement with Eqs. (40), (68), and (73). From our above discussions, we know that the diffraction will depend on the state of polarization of the source and its orientation with respect to the diffraction plane. We therefore define a crystal reflectivity operator as

$$\begin{aligned} \mathcal{R}^\sigma(\lambda, \varphi) = \int & dq_z dq_y Q^\sigma[\theta(\lambda) - \varphi - q_y] R_0^\sigma(\lambda) \\ & \times \overline{Q}^\sigma[(\eta_y - q_y)\hat{\mathbf{e}}_y + (\eta_z - q_z)\hat{\mathbf{e}}_z] \end{aligned} \tag{94}$$

where we have used $dq_z dq_y$ to indicate integration over the angles of the incident radiation. There is a similar expression for the crystal reflectivity operator to be used with $\pi$-polarization. We have then a general crystal reflectivity operator,

$$\mathcal{R}(\lambda, \varphi) = \mathcal{R}^{\sigma}(\lambda, \varphi) + \mathcal{R}^{\pi}(\lambda, \varphi) \tag{95}$$

each part acting on only that part of the incident radiation that has the indicated polarization. We have, then, established a connection between our reflectivity operators and the polarizer parameters squared, $A_{\parallel}^2$ and $A_{\perp}^2$. (See Eq. (79) and the following).

Suppose we examine a monochromatic, distant point source of radiation, linearly polarized at orientation $\kappa$,

$$S_{\lambda t \delta} = S_t^{\kappa} \delta(\lambda - \lambda_0)\delta(\delta_z)\delta(\delta_y) \tag{96}$$

with a Bragg crystal spectrometer. From such a source, we will observe a count rate in our detector of

$$n_t = E\mathcal{R}(\lambda, \varphi) S_{\lambda t \delta}.$$

If we let the direction between the $\kappa$-polarization incident and the normal to the diffraction plane be $\psi$ (see Fig. 4), from Eq. (82) we find that

$$\begin{aligned} n_t = \int & S_t^{\kappa} \delta(\lambda - \lambda_0)\delta(\delta_z)\delta(\delta_y) d\delta_z d\delta_y \\ & \cdot \{\cos^2\psi Q^{\sigma}[\theta(\lambda) - \varphi - \delta_y] R_0^{\sigma}(\lambda) \overline{Q}^{\sigma}[(\eta_y - \delta_y)\hat{\mathbf{e}}_y + (\eta_z - \delta_z)\hat{\mathbf{e}}_z] \\ & + \sin^2\psi Q^{\pi}[\theta(\lambda) - \varphi - \delta_y] R_0^{\pi}(\lambda) \overline{Q}^{\pi}[(\eta_y - \delta_y)\hat{\mathbf{e}}_y + (\eta_z - \delta_z)\hat{\mathbf{e}}_z]\} \\ & \cdot \epsilon(\lambda) d\lambda d(\eta_y - \delta_y) d(\eta_z - \delta_z). \end{aligned} \tag{97}$$

Carrying out the indicated operations yields

$$n_t = S_t^{\kappa} \epsilon(\lambda_0)\{\cos^2\psi Q^{\sigma}[\theta(\lambda_0) - \varphi] R_0^{\sigma}(\lambda_0) + \sin^2\psi Q^{\pi}[\theta(\lambda_0) - \varphi] R_0^{\pi}(\lambda_0)\}. \tag{98}$$

If we now orient our spectrometer so that $\psi = 0$,

$$n_t^{\sigma} = S_t^{\kappa} \epsilon(\lambda_0) Q^{\sigma}[\theta(\lambda_0) - \varphi] R_0^{\sigma}(\lambda_0) \tag{99}$$

and if $\psi = \pi/2$,

$$n_t^{\pi} = S_t^{\kappa} \epsilon(\lambda_0) Q^{\pi}[\theta(\lambda_0) - \varphi] R_0^{\pi}(\lambda_0). \tag{100}$$

If we scan the spectrum at an angular rate $d\varphi/dt = \omega$, the total number of counts (photons observed by the detector) observed under the line would be, from Eq. (99),

$$n^{\sigma} = S_t^{\kappa} \epsilon(\lambda_0) R_0^{\sigma}(\lambda_0) \omega^{-1} \tag{101}$$

and, from Eq. (100),

$$n^{\pi} = S_t^{\kappa} \epsilon(\lambda_0) R_0^{\pi}(\lambda_0) \omega^{-1}. \tag{102}$$

If we observed the source directly with our detector, the count rate would be

$$\overline{n}_t = S_t^{\kappa} \epsilon(\lambda_0). \tag{103}$$

Thus, the integrated reflection coefficient (at $\lambda_0$) to $\sigma$-radiation is, from Eq. (101),

$$R_0^{\sigma}(\lambda_0) = n^{\sigma} \omega / \overline{n}_t \tag{104}$$

and that to $\pi$-radiation, from Eq. (102), is

$$R_0^{\pi}(\lambda_0) = n^{\pi} \omega / \overline{n}_t. \tag{105}$$

For a randomly polarized source, we let $S_t^{\kappa} \rightarrow S_t^{\sigma} + S_t^{\pi}$, where $S_t^{\sigma} = S_t^{\pi}$ in magnitude. Then

$$\overline{n}_t = \epsilon(\lambda_0)(S_t^{\sigma} + S_t^{\pi}) \tag{106}$$

and the total number of counts from a randomly polarized source is

$$n^r = \epsilon(\lambda_0) \omega^{-1} [S_t^{\sigma} R_0^{\sigma}(\lambda_0) + S_t^{\pi} R_0^{\pi}(\lambda_0)]. \tag{107}$$

From Eqs. (106) and (107), the integrated reflection coefficient for incident random polarization is

$$R_0^r(\lambda_0) = \omega n^r / \overline{n}_t = \frac{1}{2} [R_0^{\sigma}(\lambda_0) + R_0^{\pi}(\lambda_0)]. \tag{108}$$

For an arbitrary state of polarization of the incident radiation, we let

$$S_t^{\kappa} = S_t^{\parallel} + S_t^{\perp} \qquad \text{(orthogonal)}. \tag{109}$$

Then, if we perform all the indicated operations (letting $\psi$ be the angle between $\perp$-polarization and the normal to the diffracted plane (see Fig. 4 and Eq. (82)), we find the count rate to be

$$\begin{aligned} n_t = \epsilon(\lambda_0) \{ & Q^{\sigma}[\theta(\lambda_0) - \varphi] R_0^{\sigma}(\lambda_0) [S_t^{\perp} \cos^2 \psi + S_t^{\parallel} \sin^2 \psi] \\ & + Q^{\pi}[\theta(\lambda_0) - \varphi] R_0^{\pi}(\lambda_0) [S_t^{\parallel} \cos^2 \psi + S_t^{\perp} \sin^2 \psi]. \} \end{aligned} \tag{110}$$

Scanning through the line, we find that the total observed counts would be

$$n = \epsilon(\lambda_0) \omega^{-1} [R_0^{\sigma}(\lambda_0)(S_t^{\perp} \cos^2 \psi + S_t^{\parallel} \sin^2 \psi) + R_0^{\pi}(\lambda_0)(S_t^{\parallel} \cos^2 \psi + S_t^{\perp} \sin^2 \psi)] \tag{111}$$

while

$$\overline{n}_t = \epsilon(\lambda_0)(S_t^{\perp} + S_t^{\parallel}).$$

Thus we see that we may set

$$n_t = (n_t^{\sigma\perp} + n_t^{\pi\parallel}) \cos^2\psi + (n_t^{\sigma\parallel} + n_t^{\pi\perp}) \sin^2\psi$$

$$n = (n^{\sigma\perp} + n^{\pi\parallel}) \cos^2\psi + (n^{\sigma\parallel} + n^{\pi\perp}) \sin^2\psi$$

and

$$\overline{n}_t = n_t^{\perp} + n_t^{\parallel} \tag{112}$$

which will simplify our mathematics as we continue to more complex sources.

The application of our operators to idealized line sources is reasonably straightforward even when polarization effects are included. We have found experimental definitions for the integrated reflection coefficients for idealized sources (Eqs. (104), (105), and (108)), which may be compared with the theoretical definitions in Eqs. (40), (68), and (73).

## 4. APPLICATIONS TO REAL SOURCES AND USE AS A DIAGNOSTIC TOOL

In this section, we will apply the Bragg crystal spectrometer to realistic sources using our operators. Simultaneously, we will find those spectrometer characteristics required for determining as much as possible about the source spectrum. We have already mentioned the use of Bragg's law (Eq. (11)), from which spectral features as observed by our spectrometer may be identified. Quantitative aspects of the spectrum are somewhat more difficult to determine, however, as we shall see.

Real sources are divergent and nonmonochromatic and may also be arbitrarily polarized. We will describe these sources by

$$S_{\lambda t\delta} = S_{\lambda t\delta}^{\perp} + S_{\lambda t\delta}^{\parallel}. \tag{113}$$

Then count rate $n_t^{\sigma\perp}$ is

$$n_t^{\sigma\perp} = \int S_{\lambda t\delta}^{\perp} d\delta_z d\delta_y Q^{\sigma}[\theta(\lambda) - \varphi - \delta_y] R_0^{\sigma}(\lambda) \overline{Q}^{\sigma}[(\eta_y - \delta_y)\hat{\mathbf{e}}_y + (\eta_z - \delta_z)\hat{\mathbf{e}}_z]$$
$$\cdot\, \epsilon(\lambda) d\lambda d(\eta_y - \delta_y) d(\eta_z - \delta_z). \tag{114}$$

Suppose the divergence is not too large. Then, since $R_0$ and $\epsilon$ are both local constants (reasonably far from absorption edges in both crystal and detector) and the crystal diffracts in only a small range of angles, Eq. (114) becomes

$$n_t^{\sigma\perp} = R_0^\sigma(\lambda_0)\epsilon(\lambda_0)\int S_{\lambda t\delta}^{\perp} d\delta_z d\delta_y d\lambda Q[\theta(\lambda) - \varphi - \delta_y]. \tag{115}$$

If we let the source emit both line and continuum radiation, where the continuum is locally constant in wavelength, then

$$S_{\lambda t\delta}^{\perp} = S_{\lambda t\delta}^{\perp L}(\text{line}) + S_{\lambda t\delta}^{\perp C} \quad (\text{continuum}), \tag{116}$$

and it follows that

$$n_t^{\sigma\perp} = R_0^\sigma(\lambda_0)\epsilon(\lambda_0)\left\{\int S_{\lambda t\delta}^{\perp L} d\delta_z d\delta_y d\lambda Q^\sigma[\theta(\lambda) - \varphi - \delta_y]\right.$$

$$\left. + \int S_{\lambda t\delta}^{\perp C} d\delta_z d\delta_y \int Q^\sigma[\theta(\lambda) - \varphi - \delta_y] d\lambda\right\}. \tag{117}$$

Now from Bragg's law for first-order diffraction,

$$d\lambda = 2d\cos\theta d\theta$$

and, since $\varphi$ is very nearly equal to $\theta$,

$$n_t^{\sigma\perp} \approx R_0^\sigma(\lambda_0)\epsilon(\lambda_0)\left\{\int S_{\lambda t\delta}^{\perp L} d\delta_z d\delta_y d\lambda Q[\theta(\lambda) - \varphi - \delta_y] + 2d\cos\varphi\, S_{\lambda_0 t}^{\perp C}\right\} \tag{118}$$

where $S_{\lambda t}^{\perp C}$ is the number of photons per wavelength interval per time contained in the continuum. If we scan over the line at a rate $\omega = d\varphi/dt$, (the elapsed time being $\Delta t$) we find, just as for Eq. (101),

$$n^{\sigma\perp} = R_0^\sigma(\lambda_0)\epsilon(\lambda_0)(\omega^{-1}S_t^{\perp L} + \Delta t\, 2d\cos\varphi S_{\lambda_0 t}^{\perp C}) \tag{119}$$

where $S_t^{\perp L}$ is the total number of photons per time contained in the line over which the scan took place. While the identification of a particular line in a spectrum (including its diffraction in several orders) is usually unambiguous, identification of the continuum is often not, so we include all the diffraction orders by setting

$$n^{\sigma\perp} = \omega^{-1}R_0^\sigma(\lambda_0)\epsilon(\lambda_0)S_t^{\perp L} + \Delta t\, 2d\cos\varphi \sum_m \frac{1}{m} R_0^\sigma(\lambda_0/m)\epsilon(\lambda_0/m)S_{\lambda_0/m\, t}^{\perp C} \tag{120}$$

where $m$ is the order of diffraction. Far from a line, but not so far that $R_0$, $\epsilon$, $\varphi$, and $S^{\perp C}_{\lambda t}$ are appreciably different,

$$n_t^{\sigma\perp} = 2d\cos\varphi \sum_m \frac{1}{m} R_0^{\sigma}(\lambda_0/m)\epsilon(\lambda_0/m)S^{\perp C}_{\lambda_0/m\ t}. \tag{121}$$

Then the number of counts in the line is

$$n^{\sigma\perp L} = n^{\sigma\perp}(\text{line + continuum}) - \Delta t n_t^{\sigma\perp}(\text{continuum}). \tag{122}$$

Usually, a linear interpolation of $n_t$ (continuum) is performed to determine the continuum contribution to the spectrum under the diffracted line. If so determined, $\Delta t\ n_t$ is much more nearly the true contribution under the line. Now the total counts in the line observed by the detector will be, from Eqs. (112), (120), 121), and (122),

$$\begin{aligned} n^L(\text{line}) = \omega^{-1}\epsilon(\lambda_0)\{&[R_0^{\sigma}(\lambda_0)S_t^{\perp L} + R_0^{\pi}(\lambda_0)S_t^{\parallel L}]\cos^2\psi \\ &+ [R_0^{\sigma}(\lambda_0)S_t^{\parallel L} + R_0^{\pi}(\lambda_0)S_t^{\perp L}]\sin^2\psi\} \end{aligned} \tag{123}$$

which is identical to the result obtained from a monochromatic distant point source. (See Eq. (111).) The continuum count rate in the spectrum is

$$\begin{aligned} n_t^C\ (\text{continuum}) = 2d\cos\varphi \sum_m \frac{1}{m}\epsilon(\lambda_0/m)\{&[R_0^{\sigma}(\lambda_0/m)S^{\perp C}_{\lambda_0/m\ t} + R_0^{\pi}(\lambda_0/m)S^{\parallel C}_{\lambda_0/m\ t}]\cos^2\psi \\ &+ [R_0^{\sigma}(\lambda_0/m)S^{\parallel C}_{\lambda_0/m\ t} + R_0^{\pi}(\lambda_0/m)S^{\perp C}_{\lambda_0/m\ t}]\sin^2\psi\}. \end{aligned} \tag{124}$$

If we have reason to believe that the source is randomly polarized,

$$S_t^{\perp L} = S_t^{\parallel L} = \frac{1}{2}S_t^L \quad\text{and}\quad S_{t\lambda}^{\perp C} = S_{t\lambda}^{\parallel C} = \frac{1}{2}S_{t\lambda}^C,$$

so that,

$$n^L = \omega^{-1}\epsilon(\lambda_0)S_t^L R_0^r(\lambda_0) \tag{125}$$

and

$$n_t^C = 2d\cos\varphi \sum_m \frac{1}{m}\epsilon(\lambda_0/m)S^C_{t\lambda_0/m}R_0^r(\lambda_0/m) \tag{126}$$

where we have used Eq. (108). If no higher order continuum is present (or, if any, such has been removed),

$$n_t^C = 2d\cos\varphi\epsilon(\lambda_0)S^C_{t\lambda_0}R_0^r(\lambda_0). \tag{127}$$

Even for a source with unknown orientation $\psi$ with respect to the plane of diffraction, it is possible to find the total contribution to the spectrum from the sum of both polarizations just as if the source is randomly polarized. We make two spectral scans, one at some orientation $\psi$ and the other at $\psi \pm \pi/2$. Then the total of the two scans of the continuum becomes

$$\sum n_t^C = n_t^{\sigma\perp C} + n_t^{\sigma\parallel C} + n_t^{\pi\perp C} + n_t^{\pi\parallel C}$$

or

$$\sum n_t^C = 4d \cos\varphi \epsilon(\lambda_0) R_0^r(\lambda_0) S_{\lambda_0 t}^C \tag{128}$$

where we have again removed any higher order contributions, and $S_{\lambda_0 t}^C = S_{\lambda_0 t}^{\perp C} + S_{\lambda_0 t}^{\parallel C}$. Similarly, for the line radiation,

$$\sum n^L = 2R_0^r(\lambda_0) S_t^L \omega^{-1} \epsilon(\lambda_0). \tag{129}$$

Thus, to find the source spectrum due to the total of both polarizations from the Bragg crystal spectrometer results, we must know the integrated reflection coefficient $R_0^r(\lambda)$ due to a randomly polarized source. If we had instead taken the difference between the two scans,

$$\Delta n_t^C = 2d \cos\varphi \cos 2\psi \sum_m \frac{1}{m} \epsilon(\lambda_0/m)[R_0^\sigma(\lambda_0/m) - R_0^\pi(\lambda_0/m)]\,[S_{\lambda_0/m\ t}^{\perp C} - S_{\lambda_0/m\ t}^{\parallel C}] \tag{130}$$

$$\omega \Delta n^L = \epsilon(\lambda_0)[R_0^\sigma(\lambda_0) - R_0^\pi(\lambda_0)]\,[S_t^{\perp L} - S_t^{\parallel L}] \cos 2\psi \tag{131}$$

where

$$\Delta n_t^C = n_t^C|_\psi - n_t^C|_{\psi \pm \pi/2}$$

and

$$\Delta n^L = n^L|_\psi - n^L|_{\psi \pm \pi/2}$$

At this point, we note that angle $\psi$ for the continuum need not be the same as the corresponding angle for the line(s). We may now write

$$\frac{\Delta n^L}{\Sigma n^L} = \frac{[R_0^\sigma(\lambda_0) - R_0^\pi(\lambda_0)]}{2R_0^r(\lambda_0)} \cdot \frac{(S_t^{\perp L} - S_t^{\parallel L})}{S_t^L} \cos 2\psi, \tag{132}$$

and if we were certain that no higher order continuum were present (or that any such continuum had been removed),

$$\frac{\Delta n_t^C}{\Sigma n_t^C} = \frac{[R_0^\sigma(\lambda_0) - R_0^\pi(\lambda_0)]}{2R_0^r(\lambda_0)} \cdot \frac{(S_{\lambda_0 t}^{\perp C} - S_{\lambda_0 t}^{\parallel C})}{S_{\lambda_0 t}^C} \cos 2\psi. \tag{133}$$

By producing a number of such ratios for various angles $\psi + \xi$ ($\xi$ varied), we can determine $\psi$ ($\Delta n \to 0$ for $\xi = \ell\pi/4 - \psi$, $\ell$ odd). We further note that if $\varphi = \pi/4$ (essentially Brewster's angle), the theories on crystal diffraction (Sec. 2) give $R_0^\pi = 0$. Then ($\lambda_0 = 2d \sin\pi/4$),

$$\frac{\Delta n_t^C}{\Sigma n_t^C} = \frac{(S_{\lambda_0 t}^{\perp C} - S_{\lambda_0 t}^{\parallel C})}{S_{\lambda_0 t}^C} \cos 2\psi, \tag{134}$$

and similarly for the ratios of the integrated line intensity. For this particular instance ($\varphi = \pi/4$), the polarization ratio $\Delta S/\Sigma S$ may be determined without any knowledge about the crystal. The more general case (arbitrary $\varphi$), however, requires $R_0^r(\lambda_0)$ and $R_0^\sigma(\lambda_0) - R_0^\pi(\lambda_0)$, i.e., any two of the integrated reflection coefficients (from Eq. (108)).

We include one other case here. Some sources are so small in angular extent that they may be considered to be of the form

$$S_{\lambda t \delta} = S_{\lambda t} \delta(\delta_z) \delta(\delta_y). \tag{135}$$

We will consider here only line radiation, since the contribution due to continuum may be readily removed. Then

$$S_{\lambda t \delta} = (S_{\lambda t}^{\perp L} + S_{\lambda t}^{\parallel L}) \delta(\delta_z) \delta(\delta_y). \tag{136}$$

Let us now assume that the wavelength distribution in the line of our source may be given by,

$$S_{\lambda t}^{\perp L} = T(\lambda) S_t^{\perp L}$$

and

$$S_{\lambda t}^{\parallel L} = T(\lambda) S_t^{\parallel L} \tag{137}$$

where $T(\lambda)$ is a positive definite function normalized to unity. Then, from Eqs. (112) and (115),

$$n_t^L = \epsilon(\lambda_0) \{[S_t^{\perp L} U^\sigma(\varphi) + S_t^{\parallel L} U^\pi(\varphi)] \cos^2\psi + [S_t^{\parallel L} U^\sigma(\varphi) + S_t^{\perp L} U^\pi(\varphi)] \sin^2\psi\} \tag{138}$$

where we have let

$$U^\sigma(\varphi) = \int T(\lambda) R_0^\sigma(\lambda) Q^\sigma[\theta(\lambda) - \varphi] d\lambda$$

$$U^\pi(\varphi) = \int T(\lambda) R_0^\pi(\lambda) Q^\pi[\theta(\lambda) - \varphi] d\lambda. \tag{139}$$

Now if the source is randomly polarized or if we are able to average two spectral scans at $\psi$ and $\psi \pm \pi/2$, we find

$$n_t^L = \epsilon(\lambda_0) S_t^L U^r(\varphi) \tag{140}$$

where $U^r = (U^\sigma + U^\pi)/2$. The source line shape is sometimes very useful, but unless $T(\lambda)$ is quite broad, its determination depends on our knowledge of $Q^\pi$ and $Q^\sigma$. Even then we must solve an integral equation. We note in passing that $S_{\lambda t}^L$ may include more than one line, in which case $T(\lambda)$ will be the shape of the sum of lines.

From the above discussions, we see that the Bragg crystal spectrometer is an extremely useful device, but its usefulness is limited (not surprisingly) by our lack of knowledge of it. We have attempted above to create a hierarchy of source information available, given limited knowledge of the spectrometer (in the sense of calibration). The minimum requirement is the atomic spacing (and index of refraction if needed) from which the wavelength of spectral features may be determined via Bragg's law, as expressed in Eq. (11) (or Eq. (18) if necessary). Quantitative measurements of continua and total line intensities may be obtained from Eqs. (125) through (129), provided that the quantum efficiency of the detector and the integrated reflection coefficient from random polarization are known. From Eqs. (132) through (134), source polarization may be found (in one case with very little calibration of the spectrometer) provided that the integrated reflection coefficients to polarized radiation are known. Finally, it is possible with Eq. (140) to determine although with difficulty, the source line shape, or to separate nearby lines, given the reflectivity curve of the crystal employed.

## 5. DETERMINATION OF THE CRYSTAL PARAMETERS

### 5.1 Absolute Integral Reflection Coefficients

In the laboratory, x-ray generators are usually sources of both line and continuum radiation. We will assume here that this is the case. Except for plasma sources, these generators generally produce line radiation that is very nearly monochromatic and, for our purposes, essentially a delta function. The degree of polarization is not usually known, so we must not assume the source to be unpolarized. The orientation of the polarization can generally be surmised, however, by symmetry arguments; so, we will assume that the angles between the reflection plane and the polarization directions are 0 (or $\pi/2$).

Suppose we describe the source to be used for calibration by

$$S_{\lambda t\delta} = (S_{t\delta}^{\perp L} + S_{t\delta}^{\parallel L})\delta(\lambda - \lambda_0) + S_{\lambda t\delta}^{\perp C} + S_{\lambda t\delta}^{\parallel C}. \tag{141}$$

Then the detector viewing diffracted radiation from a crystal will observe

$$n_t = E\mathcal{R}(\lambda, \varphi) S_{\lambda t\delta}$$

or, from Eqs. (82), (89), and (94),

$$n_t = \int \{ [S_{t\delta}^{\perp L} \delta(\lambda - \lambda_0) + S_{\lambda t\delta}^{\perp C}] Q^\sigma [\theta(\lambda) - \varphi - \delta_y] R_0^\sigma(\lambda)$$

$$\cdot\ \overline{Q}^\sigma [(\eta_y - \delta_y)\hat{\mathbf{e}}_y + (\eta_z - \delta_z)\hat{\mathbf{e}}_z] + [S_{t\delta}^{\parallel L} \delta(\lambda - \lambda_0) + S_{\lambda t\delta}^{\parallel C}]$$

$$\cdot\ Q^\pi [\theta(\lambda) - \varphi - \delta_y] R_0^\pi(\lambda) \overline{Q} [(\eta_y - \delta_y)\hat{\mathbf{e}}_y + (\eta_z - \delta_z)\hat{\mathbf{e}}_z] \}$$

$$\cdot\ \epsilon(\lambda) d\lambda d(\eta_z - \delta_z) d(\eta_y - \delta_y) d\delta_z d\delta_y \tag{142}$$

where we have set $\psi = 0$.

Assuming that the $S_{\lambda t\delta}^C$ are constants locally independent of wavelength and scanning the spectrometer in $\varphi$ at rate $\omega$, we find the total count in the line and continuum to be ($e^{i\psi} = 1$),

$$n(1)^{L+C} = \epsilon(\lambda_0) \left[ R_0^\sigma(\lambda_0) \left( \omega^{-1} \int S_{t\delta}^{\perp L} d\delta_z d\delta_y + 2d\Delta t \cos\varphi \int S_{\lambda t\delta}^{\perp C} d\delta_z d\delta_y \right) \right.$$

$$\left. + R_0^\pi(\lambda_0) \left( \omega^{-1} \int S_{t\delta}^{\parallel L} d\delta_z d\delta_y + 2d\Delta t \cos\varphi \int S_{\lambda t\delta}^{\parallel C} d\delta_z d\delta_y \right) \right] \tag{143}$$

where $\Delta t$ is the time required to make the spectral scan. If we now rotate the spectrometer by $\pi/2$ about the incident beam, we similarly find ($e^{i\psi} = i$);

$$n(i)^{L+C} = \epsilon(\lambda_0) \left[ R_0^\sigma(\lambda_0) \left( \omega^{-1} \int S_{t\delta}^{\parallel L} d\delta_z d\delta_y + 2d\Delta t \cos\varphi \int S_{\lambda t\delta}^{\parallel C} d\delta_z d\delta_y \right) \right.$$

$$\left. + R_0^\pi(\lambda_0) \left( \omega^{-1} \int S_{t\delta}^{\perp L} d\delta_z d\delta_y + 2d\Delta t \cos\varphi \int S_{\lambda t\delta}^{\perp C} d\delta_z d\delta_y \right) \right]. \tag{144}$$

It will become apparent later that including both the continuum and the line creates a needless complication. We might use the continuum only, but the number of photons diffracted in some of the following procedures will be very small. The continuum can be determined by interpolation between measurements made on each side of the diffracted line. The diffracted continuum produces count rates of

$$n_t(1)^C = \epsilon(\lambda_0) 2d \cos\varphi \left[ R_0^\sigma(\lambda_0) \int S_{\lambda t\delta}^{\perp C} d\delta_z d\delta_y + R_0^\pi(\lambda_0) \int S_{\lambda t\delta}^{\parallel C} d\delta_z d\delta_y \right] \tag{145}$$

and

$$n_t(i)^C = \epsilon(\lambda_0) 2d \cos\varphi \left[ R_0^\sigma(\lambda_0) \int S_{\lambda t\delta}^{\parallel C} d\delta_z d\delta_y + R_0^\pi(\lambda_0) \int S_{\lambda t\delta}^{\perp C} d\delta_z d\delta_y \right]. \tag{146}$$

We now let

$$h = \frac{n(i)^{L+C} - n(i)^{C}}{n(1)^{L+C} - n(1)^{C}} \tag{147}$$

which becomes

$$h = \frac{R_0^{\sigma} \int S_{t\delta}^{\parallel L} d\delta_z d\delta_y + R_0^{\pi} \int S_{t\delta}^{\perp L} d\delta_z d\delta_y}{R_0^{\sigma} \int S_{t\delta}^{\perp L} d\delta_z d\delta_y + R_0^{\pi} \int S_{t\delta}^{\parallel L} d\delta_z d\delta_y} \tag{148}$$

Now we examine the spectrum with a second crystal (parameters $R_{01}$, $Q_1$, and $\overline{Q}_1$). Then the observed count rates, from Eq. (142), are ($\psi = 0$)

$$n_t(1)^{L+C} = \epsilon(\lambda_0)\Big(R_{01}^{\sigma} \left\{ \int S_{t\delta}^{\perp L} Q_1^{\sigma}[\theta(\lambda_0) - \varphi - \delta_y] d\delta_z d\delta_y + 2d \cos\varphi \int S_{\lambda t\delta}^{\perp C} d\delta_z d\delta_y \right\}$$
$$+ R_{01}^{\pi} \left\{ \int S_{t\delta}^{\parallel L} Q_1^{\pi}[\theta(\lambda_0) - \varphi - \delta_y] d\delta_z d\delta_y + 2d \cos\varphi \int S_{\lambda t\delta}^{\parallel C} d\delta_z d\delta_y \right\}\Big) \tag{149}$$

and on either side of the line,

$$n_t(1)^{C} = \epsilon(\lambda_0) 2d \cos\varphi \left( R_{01}^{\sigma} \int S_{\lambda t\delta}^{\perp C} d\delta_z d\delta_y + R_{01}^{\pi} \int S_{\lambda t\delta}^{\parallel C} d\delta_z d\delta_y \right). \tag{150}$$

Keeping this same crystal in the first position, we examine the diffracted beam with our original crystal (Fig. 5). Then,

$$n_t = E\mathcal{R}(\lambda, \chi)\mathcal{R}_1(\lambda, \varphi) S_{\lambda t\delta}$$

or, from Eqs. (89) and (94) (ignoring polarization effects),

$$n_t = \int S_{\lambda t\delta} d\delta_z d\delta_y Q_1[\theta(\lambda) - \varphi - \delta_y] R_{01}(\lambda) \overline{Q}_1[(\eta_y - \delta_y)\hat{\mathbf{e}}_y + (\eta_z - \delta_z)\hat{\mathbf{e}}_z]$$
$$\cdot\, d(\eta_y - \delta_y) d(\eta_z - \delta_z) Q[\theta(\lambda) - \chi - \alpha_y] R_0(\lambda) \overline{Q}[(\xi_y - \alpha_y)\hat{\mathbf{e}}_y$$
$$+ (\xi_z - \delta_z)\hat{\mathbf{e}}_z] \epsilon(\lambda) d\lambda d(\xi_y - \alpha_y) d(\xi_z - \alpha_z) \tag{151}$$

where for

$$\psi = 0, n_t(1,1); \quad \alpha_y = \eta_y - \delta_y \text{ and } \alpha_z = \eta_z - \delta_z$$

$$\psi = \pi/2, n_t(1,i); \quad \alpha_y = \eta_z - \delta_z \text{ and } \alpha_z = -\eta_y + \delta_y$$

$$\psi = \pi, n_t(1,-1); \quad \alpha_y = -\eta_y + \delta_y \text{ and } \alpha_z = -\eta_z + \delta_z. \tag{152}$$

The orientations of both crystals are indicated by the notation used for Eq. (83). Now, Eq. (151) can be reduced to

$$n_t = \int S_{\lambda t\delta} d\delta_z d\delta_y Q_1[\theta(\lambda) - \varphi - \delta_y] R_{01}(\lambda) \overline{Q}_1[(\eta_y - \delta_y)\hat{\mathbf{e}}_y + (\eta_z - \delta_z)\hat{\mathbf{e}}_z] d(\eta_y - \delta_y)$$

$$\cdot\, d(\eta_z - \delta_z) Q[\theta(\lambda) - \chi - \alpha_y] R_0(\lambda)\epsilon(\lambda) d\lambda. \tag{153}$$

If we now sweep the second (original) crystal at rate $\omega$ over the doubly diffracted radiation ($d\chi/dt = \omega$), we find

$$n = \omega^{-1} \int S_{\lambda t\delta} d\delta_z d\delta_y Q_1(\theta(\lambda) - \varphi - \delta_y) R_{01}(\lambda) R_0(\lambda)\epsilon(\lambda) d\lambda. \tag{154}$$

Inserting the source and crystal polarization properties by using Eq. (83), (141), and (152), we find that

$$\begin{aligned} n(1,1)^{L+C} = n(1,-1)^{L+C} = \epsilon(\lambda_0)\omega^{-1} \Bigg( & R_0^\sigma R_{01}^\sigma \left\{ \int S_{t\delta}^{\perp L} Q_{01}^\sigma [\theta(\lambda_0) - \varphi - \delta_y] d\delta_z d\delta_y \right. \\ & \left. + 2d \cos\varphi \int S_{\lambda t\delta}^{\perp C} d\delta_z d\delta_y \right\} \\ & + R_0^\pi R_{01}^\pi \left\{ \int S_{t\delta}^{\parallel L} Q_{01}^\pi [\theta(\lambda_0) - \varphi - \delta_y] d\delta_z d\delta_y \right. \\ & \left. + 2d \cos\varphi \int S_{\lambda t\delta}^{\parallel C} d\delta_z d\delta_y \right\} \Bigg) \end{aligned} \tag{155}$$

and

$$\begin{aligned} n(1,i)^{L+C} = \epsilon(\lambda_0)\omega^{-1} \Bigg( & R_0^\pi R_{01}^\sigma \left\{ \int S_{t\delta}^{\perp L} Q_{01}^\sigma [\theta(\lambda) - \varphi - \delta_y] d\delta_z d\delta_y + 2d \cos\varphi \int S_{\lambda t\delta}^{\perp C} d\delta_z d\delta_y \right\} \\ & + R_0^\sigma R_{01}^\pi \left\{ \int S_{t\delta}^{\parallel L} Q_{01}^\pi [\theta(\lambda) - \varphi - \delta_y] d\delta_z d\delta_y + 2d \cos\varphi \int S_{\lambda t\delta}^{\parallel C} d\delta_z d\delta_y \right\} \Bigg). \end{aligned} \tag{156}$$

By setting the crystal in the first position (parameters $R_{01}$, $Q_1$, $\overline{Q}_1$) off the line, we obtain

$$n(1,1)^C = n(1,-1)^C = \epsilon(\lambda_0)\omega^{-1}\left(R_0^\sigma R_{01}^\sigma 2d\cos\varphi \int S_{\lambda t\delta}^{\perp C} d\delta_z d\delta_y + R_0^\pi R_{01}^\pi 2d\cos\varphi \int S_{\lambda t\delta}^{\parallel C} d\delta_z d\delta_y\right) \tag{157}$$

and

$$n(1,i)^C = \epsilon(\lambda_0)\omega^{-1}\left(R_0^\pi R_{01}^\sigma 2d\cos\varphi \int S_{\lambda t\delta}^{\perp C} d\delta_z d\delta_y + R_0^\sigma R_{01}^\sigma 2d\cos\varphi \int S_{\lambda t\delta}^{\parallel C} d\delta_z d\delta_y\right). \tag{158}$$

(Normally, measurements are taken on each side of the line and averaged.) Now we may obtain

$$\begin{aligned} n(1,1)^L &= n(1,1)^{L+C} - n(1,1)^C \\ n(1,-1)^L &= n(1,-1)^{L+C} - n(1,-1)^C \\ n(1,i)^L &= n(1,i)^{L+C} - n(1,i)^C \end{aligned} \tag{159}$$

and, from Eqs. (149) and (150),

$$n_t(1)^L = n_t(1)^{L+C} - n_t(1)^C$$

solely due to line radiation.* We now let

$$\omega G = \frac{\omega n(1,1)^L}{n_t(1)^L} = \frac{\omega n(1,-1)^L}{n_t(1)^L} \tag{160}$$

or

$$\omega G = \frac{R_0^\sigma R_{01}^\sigma \int S_{t\delta}^{\perp L} Q_1^\sigma d\delta_z d\delta_y + R_0^\pi R_{01}^\pi \int S_{t\delta}^{\parallel L} Q_1^\pi d\delta_z d\delta_y}{R_{01}^\sigma \int S_{t\delta}^{\perp L} Q_1^\sigma d\delta_z d\delta_y + R_{01}^\pi \int S_{t\delta}^{\parallel L} Q_1^\pi d\delta_z d\delta_y} \tag{161}$$

and we further let

$$H = n(1,i)^L / n(1,1)^L = n(1,i)^L / n(1,-1)^L \tag{162}$$

*A note of caution: The measurements here, $n(1,1)^{L+C}$, $n(1,-1)^{L+C}$, $n(1,i)^{L+C}$, and $n_t(1)^{L+C}$, are functions of $\varphi$, the angle between the centroid of the incident beam and the crystal planes; great care must be taken to ensure that this angle is the same for all four measurements.

or,

$$H = \frac{R_0^\pi R_{01}^\sigma \int S_{t\delta}^{\perp L} Q_1^\sigma d\delta_z d\delta_y + R_0^\sigma R_{01}^\pi \int S_{t\delta}^{\parallel L} Q_1^\pi d\delta_z d\delta_y}{R_0^\sigma R_{01}^\sigma \int S_{t\delta}^{\perp L} Q_1^\sigma d\delta_z d\delta_y + R_0^\pi R_{01}^\pi \int S_{t\delta}^{\parallel L} Q_1^\pi d\delta_z d\delta_y} . \tag{163}$$

Now source functions $S_{t\delta}^{\perp L}$ and $S_{t\delta}^{\parallel L}$ will have the same angular range, which can be made (and usually is) much larger than that of the reflectivity curve of a perfect crystal, the case for which $Q^\sigma \neq Q^\pi$. We therefore let

$$g^2 S_{t\delta}^{\perp L} = S_{t\delta}^{\parallel L} .$$

Then

$$g^2 \int S_{t\delta}^{\perp L} d\delta_z d\delta_y = \int S_{t\delta}^{\parallel L} d\delta_z d\delta_y \tag{164}$$

and further,

$$g^2 \int S_{t\delta}^{\perp L} Q_1^\sigma d\delta_z d\delta_y = \int S_{t\delta}^{\parallel L} Q_1^\pi d\delta_z d\delta_y . \tag{165}$$

These steps would have been impossible if we had included the diffracted continuum as well as the diffracted line. We also let

$$f^2 R_0^\sigma = R_0^\pi \tag{166}$$

and we assume that

$$f^2 R_{01}^\sigma = R_{01}^\pi \tag{167}$$

i.e., the two crystals are the same in this respect. (This assumption is not necessary in cases for which $R_{01}^\sigma / R_{01}^\pi$ is known.) We may now write, Eq. (148),

$$h = \frac{f^2 + g^2}{1 + f^2 g^2} \tag{168}$$

and

$$H = \frac{f^2(1+g^2)}{1 + f^4 g^2} . \tag{169}$$

Elimination of $g^2$ produces

$$f^6 - 3\alpha f^4 + 3\alpha f^2 = 1 \tag{170}$$

where

$$\alpha = \frac{1}{3}\left(h + \frac{1+h}{H}\right).$$

The roots of this equation are

$$f^2 = 1$$

$$f^2 = \left(\frac{3\alpha - 1}{2}\right) + \left[\left(\frac{3\alpha - 1}{2}\right)^2 - 1\right]^{1/2}$$

and

$$f^2 = \left(\frac{3\alpha - 1}{2}\right) - \left[\left(\frac{3\alpha - 1}{2}\right)^2 - 1\right]^{1/2}. \tag{171}$$

Now, if $f^2 = 1$ is the root, $H = h = 1$. Thus, $\alpha = 1$ and we find that all three roots are the same, $f^2 = 1$, a trivial result. We also see that if $\alpha < 1$, our remaining two roots are complex, an unphysical result, so $\alpha \geqslant 1$. Comparison with our diffraction theories shows that the only reasonable root is

$$f^2 = \left(\frac{3\alpha - 1}{2}\right) - \left[\left(\frac{3\alpha - 1}{2}\right)^2 - 1\right]^{1/2} \tag{172}$$

since this is the only one for which $R_0^\pi / R_0^\sigma \leqslant 1$, in general. We may now find $g^2$, a measure of the polarization of the source. Equation (161) may now be written

$$\omega G = R_0^\sigma \frac{(1 + f^4 g^2)}{(1 + f^2 g^2)} \tag{173}$$

from which $R_0^\sigma$ may be found; $R_0^\pi = f^2 R_0^\sigma$ and $R_0^r = 1/2\ (R_0^\sigma + R_0^\pi)$ readily follow. All the integral reflection coefficients are thus determined.

## 5.2 Relative Integral Reflection Coefficients

By following the procedure in Sec. 5.1 we may determine the integral reflection coefficients of a crystal, which can then be used as a standard. When such a standard exists, integral reflection coefficients of another crystal may be found by comparison. By making use of Eqs. (143) through (146), we find that the total number of counts in a line observed by our detector is (for $\psi = 0$)

$$n(1)^L = n(1)^{L+C} - \Delta t n_t(1)^C = \epsilon(\lambda_0)\omega^{-1}\left[R_0^\sigma(\lambda_0) \int S_{t\delta}^{\perp L} d\delta_z d\delta_y \right.$$

$$\left. + R_0^\pi(\lambda_0) \int S_{t\delta}^{\parallel L} d\delta_z d\delta_y \right] \tag{174}$$

and (for $\psi = \pi/2$),

$$n(i)^L = n(i)^{L+C} - \Delta t n_t(i)^C = \epsilon(\lambda_0)\omega^{-1}\left[R_0^\pi(\lambda_0)\int S_{t\delta}^{\perp L} d\delta_z d\delta_y + R_0^\sigma \int S_{t\delta}^{\parallel L} d\delta_z d\delta_y\right]. \tag{175}$$

Now, by adding these two equations, we find

$$\sum n = n(i)^L + n(1)^L = \epsilon(\lambda_0)\omega^{-1} 2R_0^r(\lambda_0)\int S_{t\delta}^L d\delta_z d\delta_y \tag{176}$$

where $S_{t\delta}^L = S_{t\delta}^{\perp L} + S_{t\delta}^{\parallel L}$. Thus we see that direct comparison between the measurements taken with the standard and those taken with our sample readily provides the integral reflection coefficient $R_0^r(\lambda_0)$ due to random polarization of our sample.

Usually, the radiation in a spectral line is not greatly polarized, so that taking the difference of $n(i)^L$ and $n(1)^L$ often results in large statistical errors. The continuum radiation, however, may be polarized to a considerable degree, so for the determination of $R_0^\sigma$ and $R_0^\pi$ (or rather, of their difference) we will use the continuum. From Eq. (145) and (146) (if $\Delta n_t^C = n_t(i)^C - n_t(1)^C$),

$$\Delta n_t^C = \epsilon(\lambda_0) 2d \cos\varphi\,[R_0^\sigma(\lambda_0) - R_0^\pi(\lambda_0)]\int (S_{\lambda t\delta}^{\parallel C} - S_{\lambda t\delta}^{\perp C}) d\delta_z d\delta_y. \tag{177}$$

Now, direct comparison between the measurements taken with the standard and those taken with our sample provides $R_0^\sigma(\lambda_0) - R_0^\pi(\lambda_0)$. By using $R_0^r(\lambda_0)$ as determined, we can readily find $R_0^\sigma(\lambda_0)$ and $R_0^\pi(\lambda_0)$.

### 5.3 Reflectivity Curve

We will assume here that we have an unpolarized source of line radiation. (A continuum is included in our measurements; but we have seen that its contribution may readily be removed.) In front of this source, we arrange two slits of equal width some distance apart and uniformly illuminated by the source. In the x-ray region, diffraction effects due to macroscopic slits are unimportant, so the radiation falling on a Bragg crystal spectrometer may be described by (assuming random polarization),

$$S_{\lambda t\delta} = g_t(\delta_z)\delta(\lambda - \lambda_0)h(\delta_y) \tag{178}$$

where

$$h(\delta_y) = 0 \qquad \text{for } |\delta_y| \geqslant \delta_0$$

$$h(\delta_y) = \frac{1}{\delta_0}(\delta_0 + \delta_y) \qquad \text{for } 0 \geqslant \delta_y \geqslant -\delta_0$$

$$h(\delta_y) = \frac{1}{\delta_0}(\delta_0 - \delta_y) \qquad \text{for } 0 \leqslant \delta_y \leqslant \delta_0. \tag{179}$$

We will require (for minimum statistical errors) that $\delta_0$ be on the order of, or less than, the diffraction width. From the detector of the spectrometer, we obtain a count rate,

$$n_t = \epsilon(\lambda_0)\left[\int g_t(\delta_z)d\delta_z\right]\int h(\delta_y)\{R_0^\sigma(\lambda_0)Q^\sigma[\theta(\lambda_0) - \varphi - \delta_y)$$

$$+ R_0^\pi(\lambda_0)Q^\pi[\theta(\lambda_0) - \varphi - \delta_y]\}\,d\delta_y \tag{180}$$

as a function of crystal angle $\varphi$. Taking the second derivative of $n_t(\varphi)$ with respect to $\varphi$ and integrating by parts twice, we find that

$$\frac{d^2 n_t}{d\varphi^2} = \text{const.}\int[\delta(\delta_y + \delta_0) - 2\delta(\delta_y) + \delta(\delta_y - \delta_0)]\,Q[\theta(\lambda_0) - \varphi - \delta_y]\,d\delta_y \tag{181}$$

where we have set $Q = R_0^\sigma Q^\sigma + R_0^\pi Q^\pi$. The integral can be evaluated trivially:

$$\frac{d^2 n_t}{d\varphi^2} = \text{const.}\{Q[\theta(\lambda_0) - \varphi + \delta_0] - 2Q[\theta(\lambda_0) - \varphi] + Q[\theta(\lambda_0) - \varphi - \delta_0]\}. \tag{182}$$

By starting with data far from the line, so that $d^2 n_t/d\varphi^2 = 0$, we may also assume that

$$Q[\theta(\lambda_0) - \varphi + \delta_0] = Q[\theta(\lambda_0) - \varphi] = Q[\theta(\lambda_0) - \varphi - \delta_0] = 0.$$

For clarity, we set $\gamma = \varphi - \theta(\lambda_0) + \delta_0$. Then we find

$$Q(-\gamma) = \frac{d^2 n_t(\gamma - \delta_0)}{d\gamma^2} + 2Q(-\gamma + \delta_0) - Q(-\gamma + 2\delta_0). \tag{183}$$

Thus, starting at a point where all terms equal zero, $\gamma = -\gamma_0$, i.e., $Q(> \delta_0) = 0$, we find for $-\gamma_0 \leqslant \gamma \leqslant -\gamma_0 + \delta_0$,

$$Q(-\gamma) = \frac{d^2 n_t(\gamma - \delta_0)}{d\gamma^2}.$$

So we have $Q(\gamma_0 \geqslant -\gamma \geqslant \gamma_0 - \delta_0)$. For the next interval, $-\gamma_0 + \delta_0 \leqslant \gamma \leqslant -\gamma_0 + 2\delta_0$, we find

$$Q(-\gamma) = \frac{d^2 n_t(\gamma - \delta_0)}{d\gamma^2} + 2Q(\gamma_0 \geqslant -\gamma + \delta_0 \geqslant \gamma_0 - \delta_0).$$

For the next and all succeeding intervals, we must use all the terms, since none are certain to be zero. We may continue on in the same way until we have the complete shape (except for a constant) of $Q[\theta(\lambda) - \varphi]$, the integral of which we set equal to unity. Because of statistical considerations, fitting of $n_t$ may be required, and care should be taken to insure that the second derivatives of the fitted curves are continuous.

## 6. INTEGRAL REFLECTION COEFFICIENTS: AN EXAMPLE, LITHIUM FLUORIDE

The techniques of Sec. 5.1, were used to determine the first-order integral reflection coefficients of a lithium fluoride crystal (200), which are shown here as an example. The detector used was a flow proportional counter filled with 10% methane in argon. The pressure to which the counter was filled became the largest contribution of systematic errors. Systematic errors were determined by before-and-after measurements of the line intensity diffracted by one crystal. The errors resulting from statistical (Poisson) variations in the x-ray source were taken into account by the methods described in Appendix A. Errors, both systematic and statistical, are included in the error bars of the figures.

In Fig. 8, we show the determined ratio $R_0^\pi/R_0^\sigma$ as a function of Bragg angle $\theta$, together with that expected from an ideal mosaic crystal, $\cos^2 2\theta$, and that expected from an ideal perfect crystal, $|\cos 2\theta|$. Neither of these idealizations describes this ratio over the entire wavelength range included in our measurements. In Fig. 9, the three integral reflection coefficients $R_0^\sigma$, $R_0^\pi$, and $R_0^r$ are shown as functions of wavelength. Since all the data presented in Figs. 8 and 9 are derived from the same set of measurements, the error in each datum for a particular wavelength is not completely independent of the error in any other. For example, the error in $R_0^r(\lambda = 1.54$ Å) is not found by taking one-half the square root of the sum of the squares of $R_0^\sigma(\lambda = 1.54$ Å) and $R_0^\pi(\lambda = 1.54$ Å).

## 7. CONCLUSIONS AND DISCUSSION

In the preceding sections, we have discussed the usefulness of the Bragg single crystal spectrometer as a tool for quantitatively analyzing the spectra of x-ray emission sources. With such a device, properly calibrated, we may determine not only the wavelengths of spectral features, but also the energy contained in the lines and continuum as well as the degree of polarization. Line shapes can also be determined (with some difficulty), depending on the intrinsic line width and spatial extent of the source. The Bragg crystal spectrometer is therefore a valuable tool for diagnosing x-ray sources (e.g., astrophysical and laboratory plasmas).

We have presented an outline of the theory of x-ray diffraction from crystals and discussed the qualitative aspects. Application of the theory to real crystals (including

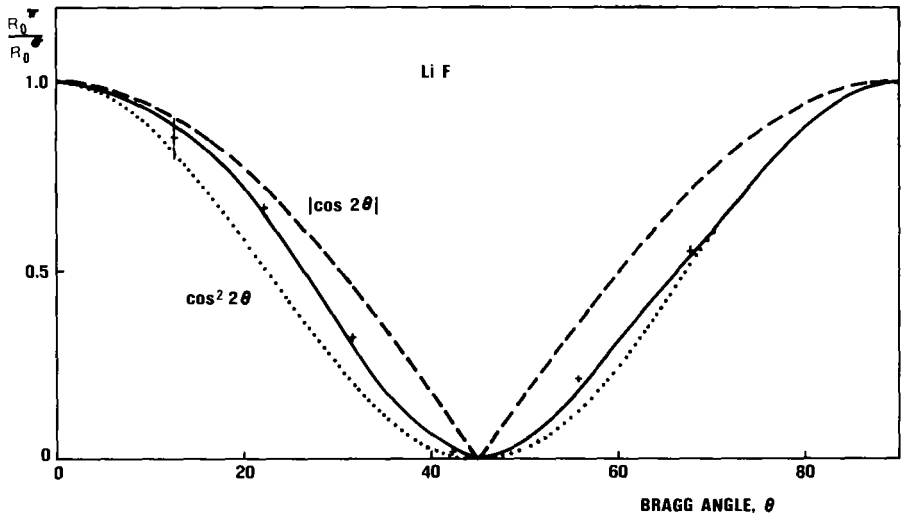


Fig. 8 — The ratio of the polarization factor, $R_0^\pi/R_0^\sigma$, for a lithium fluoride crystal (200 cut). Note that this ratio conforms to neither the perfect crystal diffraction theory ($|\cos 2\theta|$) nor the ideally imperfect crystal diffraction theory ($\cos^2 2\theta$).

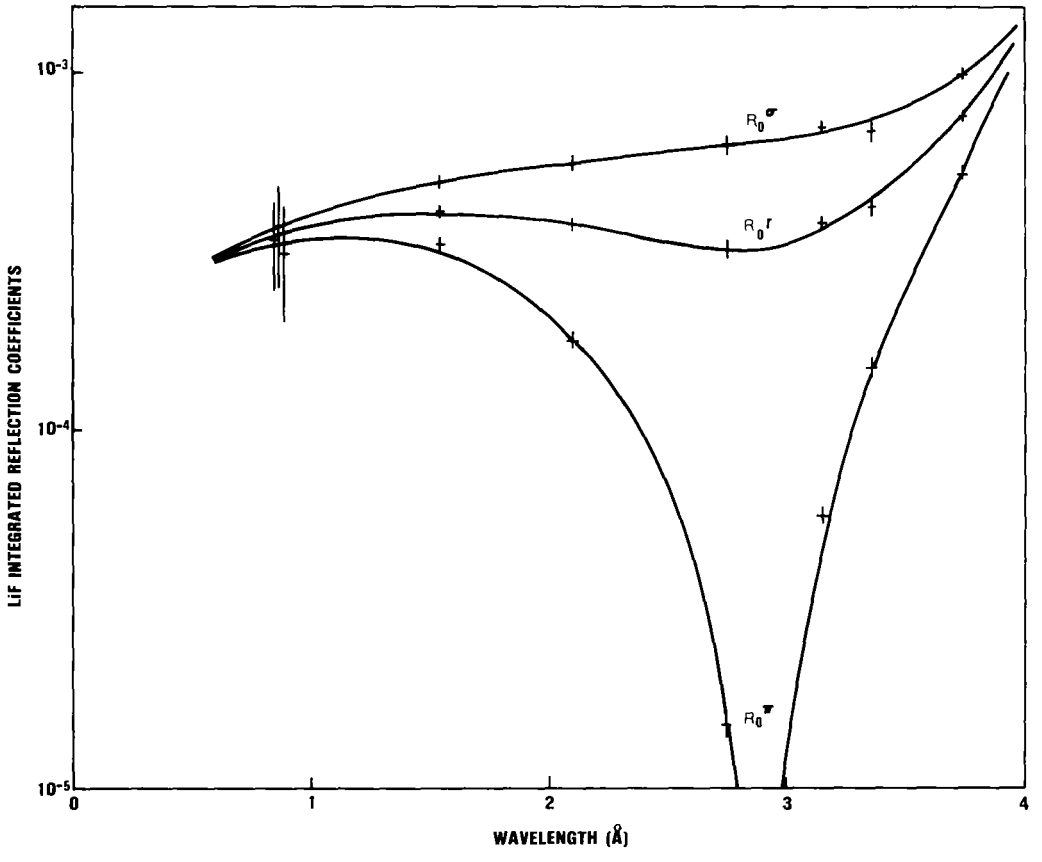


Fig. 9 — First-order integrated reflection coefficients for a lithium fluoride crystal (200 cut) as a function of diffracted wavelength. Two of the data points at 0.877 Å are displaced in wavelength for clarity.

absorption effects) involves extensive numerical calculation even if, indeed, the theory applies to the crystal in hand. We have also presented, in as general a form as possible, the techniques and measurements required to determine the characteristics of a single crystal Bragg spectrometer. The procedures are illustrated using a lithium fluoride crystal (200).

## REFERENCES

1. F. A. Jenkins and H. E. White, *Fundamentals of Optics*, 3d ed., p. 330, McGraw-Hill Book Co., Inc., New York, 1957.
2. M. Born and E. Wolf, *Principles of Optics*, pp. 83-91, Pergamon Press, Inc., New York, 1959.
3. J. D. Jackson, *Classical Electrodynamics*, p. 492, John Wiley and Sons, Inc., New York, 1962.
4. C. G. Darwin, *Phil. Mag.* **27**, 315 (1914) and **27**, 675 (1914).
5. J. A. Prins, *Zeit. f. Phys.* **63**, 477 (1930).
6. J. F. Meekins, et al., "Absolute Calibration of X-ray Ionization Chambers," NRL Report 7698, May 8, 1974.

## Appendix A
## STATISTICS AND PROPAGATION OF ERRORS

Suppose we make $m$ independent measurements. Each measurement will have an associated error (e.g., if $N$ is the number of observed photons from a source, the standard deviation is $\sqrt{N}$ if the photons are Poisson distributed). We associate orthogonal unit vectors $\hat{\mathbf{e}}_1$, $\hat{\mathbf{e}}_2$, $\hat{\mathbf{e}}_3$ ... $\hat{\mathbf{e}}_m$ with the $m$ independent measurements $N_1, N_2, N_3, ..., N_m$. Denoting the standard errors by $\sigma_1, \sigma_2, \sigma_3, ..., \sigma_m$, we may define error vectors $\boldsymbol{\sigma}_1, \boldsymbol{\sigma}_2, \boldsymbol{\sigma}_3 ..., \boldsymbol{\sigma}_m$, where $\boldsymbol{\sigma}_i = \sigma_i \hat{\mathbf{e}}_i$. Now, suppose we have a calculation based directly on measurements of $N_i$, i.e.,

$$f = f(N_1, N_2, ... N_m). \tag{A1}$$

Then, approximately, the error $|\sigma_f|$ in $f$ is obtained from

$$\sigma_f = \sum_{i=1}^{m} \frac{\partial f}{\partial N_i} \sigma_i. \tag{A2}$$

Now, suppose we calculate an additional parameter:

$$h = h(f, N_1, N_2, ... N_m). \tag{A3}$$

In this case we would normally take

$$\sigma_n^2 = \sum_{i=1}^{m} \left( \frac{\partial h}{\partial f} \frac{\partial f}{\partial N_i} + \frac{\partial f}{\partial N_i} \right)^2 \sigma_i^2. \tag{A4}$$

For complicated expressions arrived at through many algebraic steps, the propagation of errors in such a way becomes tedious and difficult. The same result is obtained if we take

$$\sigma_h = \frac{\partial h}{\partial f} \sigma_f + \sum_{i=1}^{m} \frac{\partial h}{\partial N_i} \sigma_i \tag{A5}$$

and let $\sigma_h = |\sigma_h|$ be the error in $h$. Often, the final results desired are not statistically independent and the relationship of the errors in the final result might also be required for future calculations. Keeping $m$-dimensional error vectors is often not practical. By using the Schmidt orthogonalization procedure, we reduce the dimension of the error vectors to at most the number of final results desired.