NRL REPORT 3527

PORTABLE PRECISION FREQUENCY METER

G. K. Jensen and James E. McGeogh

September 6, 1949

Approved by:

Mr. F. M. Gager, Head, Special Research Branch
Dr. R. M. Page, Superintendent, Radio Division III

NAVAL RESEARCH LABORATORY
CAPTAIN F. R. FURTH, USN, DIRECTOR
WASHINGTON, D.C.

APPROVED FOR PUBLIC
RELEASE - DISTRIBUTION
UNLIMITED

DISTRIBUTION

CNO	1
BuAer	
Attn: Code AER-EL-55	1
Attn: Code AER-MA-35	1
BuShips	
Attn: Code 837	1
Attn: Code 991	1
ONR	
Attn: Code 470	1
Supt. USNPGS	1
Dir., USNEL	2
CDR., USNOTS	
Attn: Reports Unit	2
OCSigO	
Attn: Ch. Eng. & Tech. Div., SIGTM-S	1
CO, SCEL	
Attn: Dir. of Eng.	2
CO., Squier Signal Labs. Ft. Monmouth, N. J.	1
BAGR, CD, Wright-Patterson AFB	
Attn: CADO-D1	1
CG, AMC, Wright-Patterson AFB	
Attn: Eng. Div. Electronics Subdiv., MCREEO-2	1
CO, Watson Labs., AMC, Red Bank	
Attn: ENR	1
CO, Air Force Cambridge Res. Labs.	
Attn: ERRS	1
RDB	
Attn: Library	2
Attn: Navy Secretary	1
Office of Tech. Services, Dept. of Commerce	1
Naval Res. Sec., Science Division	
Attn: Mr. J. H. Heald	2

CONTENTS

Abstract iv

Problem Status iv

Authorization iv

INTRODUCTION 1

FREQUENCY METER CIRCUIT 3

DECADE DIVIDER 8

SIGNIFICANT DEVELOPMENT PROGRESS 19

FRONT PANEL CONTROLS 21

OPERATING PROCEDURE 23

Measurement of Single Stable Input Frequencies 23
Measurement of Multiple Input Frequencies 25
Measurement of Unstable Input Frequencies 25

PROPOSED FREQUENCY METER MODIFICATIONS 25

CONCLUSIONS 26

ABSTRACT

The portable frequency meter proposed in this report measures any frequency in the range of 5 Mc to 1407 Mc to an accuracy within three parts per million, 0.0003 percent. This self-contained frequency meter provides a stable comparison frequency of known calibration which is compared with the unknown frequency through a crystal mixer, video amplifier type receiver, and the unknown is identified by the use of the associated filter and indicator circuits. The stable oscillator is positioned by an automatic frequency control loop consisting primarily of a direct reading, four decade frequency divider, a phase discriminator, a reactance tube, and a temperature controlled crystal oscillator which provides a very stable control frequency at the phase discriminator. Frequency change of the positioned oscillator is made by switching of the four decade divider controls. The proposed frequency meter will require no external calibration curves or tables, but will present the frequency reading on the front panel in the form of a very simple frequency equation. Operation of the meter will be simple and direct.

PROBLEM STATUS

This is an interim report on the problem; work is continuing on other phases of the problem.

AUTHORIZATION

NRL Problem R10-49D (NL 490-018)

PORTABLE PRECISION FREQUENCY METER

INTRODUCTION

This report describes the work to date[1] and future plans on Problem R10-49D, Bureau Request No. A-272 ED-R, which has as its objective the development of a portable frequency meter or meters to cover the frequency range of 10 to 500 Mc with an accuracy of measurement better than 10 parts per million (ppm).

Measurement of frequencies to the specified accuracy by conventional heterodyne methods requires bulky equipment and unusual skill on the part of the operator; therefore, it is the goal of the Naval Research Laboratory to develop a portable frequency meter which will require the least operational effort on the part of the user. Such a frequency meter, ideally, would be completely automatic; that is, with a signal of unknown frequency fed into the unit all the operator need do is push a button, and wait for the value of the unknown frequency to appear on a numerical register type of presentation. A completely automatic frequency meter is within the realm of possibility; however, the additional complication for portable use is considered to be a refinement not justified by the problem. Thus, the subject frequency meter has been designed to be operated manually, with all controls as simple and foolproof as possible and still provide a precise and rapid measurement of frequency.

Heterodyne types of portable frequency meters now available have certain shortcomings which should be avoided in any new designs. A few of the important faults are enumerated below:

(1) Confusion sometimes exists as to which local oscillator harmonic is used, necessitating a series of measurements.

(2) A special noninterchangeable booklet of calibration tables is required for each instrument and these are subject to misuse or loss.

(3) The use of the calibration tables and the interpolation between numbers is time consuming and subject to error.

(4) Accuracy of measurement is not as good as 10 parts per million.

---

[1] *Previous reports on this problem are: Gager, F. M., and Headrick, J. M., "Fixed and Variable Frequency Oscillators with Improved Frequency Stability," NRL Report R-3082 (Unclassified), May 1947; Headrick, J. M., "Constant-Frequency Characteristics of a Dual-Feedback-Path Bridge Oscillator," NRL Report R-3428 (Unclassified), 3 May 1949.*

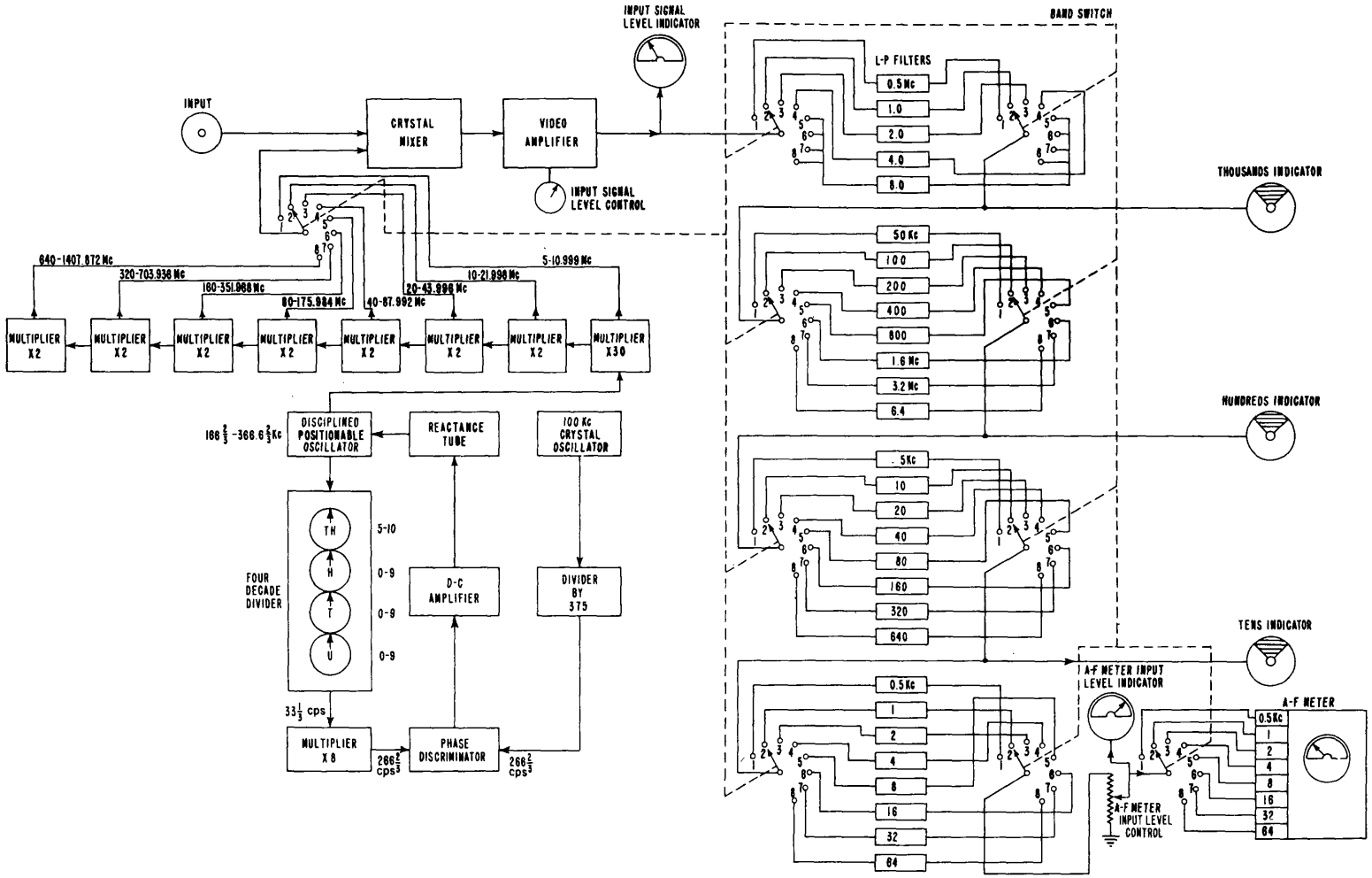

Figure 1 - Frequency meter block diagram

The frequency meter described in this report is a direct reading type of meter in that it requires neither a booklet of calibration tables or curves nor interpolation between calibrated points.

The process of measurement is simple and direct and may be accomplished in a minimum of time. The generation and use of a harmonic spectrum in the mixing circuits has been avoided. An internal signal is generated to compare with the unknown signal, and the latter's frequency, as well as its direction with respect to the unknown, is easily determined. The frequency range and accuracy of frequency measurement will be well within the problem specifications.

The basic circuit design of the subject frequency meter has been completed and this as well as procedural use will be described in succeeding paragraphs. The development of the major and most difficult circuits, that of the decade dividers, is also complete, and these will be described later in this report.

FREQUENCY METER CIRCUIT

The proposed frequency meter is shown by the block diagram, Figure 1. The system incorporates a local oscillator which provides an accurately positioned, known frequency that may be compared to the unknown frequency in a crystal-video type receiver. Presentation of the receiver output difference frequency, and direction with respect to the known frequency is made on an audio frequency meter. From this information and divider settings, the unknown frequency may be readily determined.

The local variable frequency oscillator is disciplined with reference to a temperature controlled crystal oscillator by an a-f-c loop consisting, primarily, of a direct reading four decade frequency divider, a phase discriminator, and a reactance tube. The local variable frequency oscillator may be positioned, by selection of the frequency divider division ratio, to any one of 5999 frequencies within the approximate 2.2:1 local oscillator range of 166 2/3 to 366.63 1/3 kc. Between available frequencies, the smallest step is 33 1/3 cps. The local oscillator will henceforth, in this report, be called a disciplined positionable oscillator (D.P.O.).

To obtain an a-f-c control the D.P.O. output is fed to the first of four decade dividers. It is possible to obtain division of the D.P.O. frequency by any integer, including prime numbers, between 5000 and 10,999 with this divider circuit. The output frequency from the decade divider will be 33 1/3 cps as will be shown later. This output is multiplied by eight to a frequency of 266 2/3 cps and fed to a phase discriminator. A 100 kc temperature controlled crystal oscillator is divided to 266 2/3 cps and fed to the phase discriminator as a stable reference frequency. If the output from the four decade divider path is not exactly in phase with the 266 2/3 cps crystal reference frequency, a correcting d-c voltage will be developed in the phase discriminator and applied to the reactance tube which will correct the D.P.O. frequency. If the setting of the decade divider is changed, the output frequency will be temporarily different from 33 1/3 cps. However, a correcting voltage will be obtained at the phase discriminator which will correct the D.P.O. until both the frequencies at the phase discriminator are in phase. By this means the setting of the decade divider determines the controlled frequency of the D.P.O. For example, a division ratio of 6000 may be selected. This requires that the oscillator be:

$$33\ 1/3 \times 6000 = 200{,}000 \text{ cps or } 200.000 \text{ kc}$$

in order to produce the 33 1/3 cps divider output frequency. If this division ratio is increased by one unit to 6001, the D.P.O. will be corrected to

$$33\ 1/3 \times 6001 = 200{,}033\ 1/3 \text{ cps.}$$

The 33 1/3 cps is the smallest step in the D.P.O. frequency available by switching decade controls. Similar to above, the full D.P.O. range of 166 2/3 to 366.63 1/3 kc may be covered in 33 1/3 cps steps by the range of the decade controls. The units-decade-switch positions the D.P.O. in steps of 33 1/3 cps, the tens in 333 1/3 cps steps, the hundreds in 3,333 1/3 cps steps and the thousands in 33,333 1/3 cps steps.

The direct reading four-decade divider is capable of division by ratios of 1 to 32,999 but it was mechanically limited to a range of 5,000 to 10,999. By this means it was possible to provide equal incremental frequency steps at the D.P.O. frequency and permit decimal type dial calibration. Had the range of the decade dividers not been mechanically limited the D.P.O. band would have been divided into 32,999 parts which would not have been of equal frequency steps.

It is essential that the completion of a division cycle including resetting of all divider circuits be accomplished in a time less than one input cycle of the input frequency. In the proposed frequency meter the highest input frequency is 366.63 1/3 kc which is equivalent in time to $10^{-3}/(366.63\ 1/3)$ or 2.7 microseconds. Since four decades are used, each must operate within a reset time of (2.7 microseconds minus reset pulse width)/4 and the total elapsed time for division through the four decades must be less than 2.7 microseconds.

Since the divider is a direct reading decade system, the calibration of the selector knobs may be made directly in division radio, directly in D.P.O. frequency, or directly in any multiple of the D.P.O. frequency. The latter has been chosen for this system to eliminate cumbersome calibration tables.

The reactance tube alone cannot control the D.P.O. frequency accurately over the total frequency range. For this reason the thousands, hundreds, and tens decade switches are to be mechanically ganged to the D.P.O. tuning condenser so that the thousands decade switch will divide the tuning range into six equal frequency parts, the hundreds decade switch will further divide each of these into 10 equal parts, and the tens decade switch will divide each of those parts into 10 equal frequency parts. This provides an initial mechanical setting to within 0.2 percent of the frequency to which the reactance tube must position the oscillator. The multiplier circuits which follow the D.P.O. will likewise be mechanically adjusted by this means to 0.2 percent of their normal operating frequency.

It has now been shown how the D.P.O. is positioned in frequency. The accuracy of this frequency is determined solely by the crystal oscillator and the phase discriminator-reactance tube control of the D.P.O. The decade divider is a positive acting circuit and does not enter into the frequency accuracy. It is possible to obtain a crystal accurate to within 1.0 part per million by temperature control of the crystal. Also the a-f-c loop disciplining error may be held to less than 1.0 ppm. Therefore, the total error in the D.P.O. frequency is the algebraic sum of the two errors on 2.0 ppm for the condition where the errors are additive.

Use of the controlled D.P.O. frequency in the measurement of an unknown signal is accomplished in the following manner:

The accurately positioned oscillator covers a fundamental frequency range of only 166 2/3 to 366.63 1/3 kc as previously shown, and it is necessary to multiply this frequency

range to provide comparison frequencies which may be used to measure unknown frequencies in the 5 to 1407 Mc range. The comparison frequencies are generated in eight separate bands. The D.P.O. frequency will be 166 2/3 kc when the decade controls are set to 5000, and a frequency multiplier which follows the D.P.O. increases this frequency by a factor of 30 to 5 Mc. Similarly, a decade setting of 10,000 causes a D.P.O. frequency of 333 1/3 kc which is multiplied to 10 Mc. This frequency range is sufficient for the first band, but an overlapping of bands is sometimes convenient and may be easily provided in this case by using decade settings as high as 10,999 which corresponds to a top D.P.O. frequency of 366.63 1/3 kc, and a top limit for this frequency band of 10,999 Mc. A series of seven cascaded frequency doublers provide the comparison frequencies for the other frequency bands, and the output of any of these doublers may be selected by a bandswitch control.

The frequency coverage may be listed by bands as follows:

Band	Frequency Range	Maximum Frequency Steps
1	5 to 10.999 Mc	1 Mc
2	10 to 21.998	2
3	20 to 43.996	4
4	40 to 87.992	8
5	80 to 175.984	16
6	160 to 351.968	32
7	320 to 703.936	64
8	640 to 1407.872	128

Since the D.P.O. frequency is multiplied by the doubler circuits the frequency steps are also multiplied and are shown above as the change produced by the thousands decade control. For any given combination of decade and bandswitch controls, only one comparison frequency will be present at the receiver crystal mixer.

The circuits which follow the receiver crystal mixer provide an indication by which the comparison frequency at the receiver crystal mixer may be adjusted (by adjustment of the decade divider controls) to the step closest to the unknown frequency being measured, and to directly indicate the remaining difference frequency between the comparison and the unknown as well as the direction of the unknown with respect to the comparison frequency. The information thus obtained is entirely presented on the front panel of the frequency meter. The particular comparison circuits chosen for the proposed frequency meter are the ones that, in the opinion of the authors, will provide the most simple, direct, and most rapid measurement of frequency by the operator with the least circuit complication, and will provide positive identification of the frequency being measured.

These circuits are comprised of a video amplifier, a filter network, adequate monitors, and a bandswitch. The video amplifier follows the receiver crystal mixer and increases the signal amplitude to the filter network.

The filter network is composed of four filter groups with each group consisting of eight low pass filters. The bandswitch control selects one filter from each group such

that the cut-off frequencies of the first, second, third, and fourth filters are equal to one-half the frequency steps caused by adjustment of the thousands, hundreds, tens, and units decade controls, respectively, for the corresponding selected frequency band. The bandswitch connects the selected filters in series. Electron ray tubes are permanently connected to the output buses of the thousands, hundreds, and the tens filter banks. The last filter output signal is applied to the input of an a-f meter which has a full scale reading selected by the bandswitch and is equal to the cut-off frequency of the fourth filter. By the above means the bandswitch selects the proper filters and indicators which are necessary in order to adjust the internal, accurately positioned comparison frequency to within a difference frequency between the comparison and unknown frequency that may be indicated on the a-f meter.

For example, (see Figure 1), the bandswitch control may be set to position 1 which covers a frequency range of 5.000 to 10.999 Mc. On this band the frequency steps at the mixer caused by adjustment of the thousands, hundreds, tens, and units decade controls are 1.0 Mc, 100 kc, 10 kc, and 1 kc, respectively. Since the frequency step caused by the thousands decade control is 1.0 Mc, it will always be possible to position the comparison frequency to within 500 kc of the unknown frequency; hence, the required cut-off frequency of the filter is 500 kc and an electron ray tube indication will result when the thousands control is adjusted to the correct setting. Similarly, the required second, third and fourth filter cut-off frequencies are 50 kc, 5 kc, and 500 cps respectively, and electron ray tube indications are obtained for proper adjustment of the hundreds and tens controls and an on-scale a-f meter indication is obtained when the units control is correctly positioned.

A table of the low pass filter cut-off frequencies is shown below for each of the bandswitch positions.

Band No.	Frequency Range	L.P. Filter Cut-off Frequencies			
		Thousands Filter	Hundreds Filter	Tens Filter	Units Filter
1	5-10.999 Mc	500 kc	50 kc	5 kc	500 cps
2	10-21.998	1 Mc	100 kc	10	1 kc
3	20-43.996	2 Mc	200 kc	20	2
4	40-87.992	4 Mc	400 kc	40	4
5	80-175.984	8 Mc	800 kc	80	8
6	160-351.968	16 Mc (8 Mc)	1.6 Mc	160	16
7	320-703.936	32 Mc (8 Mc)	3.2 Mc	320	32
8	640-1407.872	64 Mc (8 Mc)	6.4 Mc	640	64

The frequency steps produced by the decade controls for any band are twice the cut-off frequency of the corresponding filter.

Although the thousands filters of 16 Mc, 32 Mc, and 64 Mc are highly desirable for bands 6, 7, and 8, respectively, it is not feasible to provide them, because of limited receiver bandwidth, in the frequency meter; hence the 8 Mc filter is used for the thousands filter on bands 6, 7, and 8 in additon to band 5 where it is normally required. Due to this

limitation a thousands indication is not assured in these three bands by adjustment of only the thousands decade control. A thousands indication is obtained for one or more positions of the hundreds control when the thousands control is correctly positioned. A hundreds indication is obtained at only the single correct hundreds control setting.

The decade divider controls are calibrated directly in frequency when the bandswitch is set to position 1. On bands 2, 3, 4, 5, 6, 7, and 8 the decade calibration must be multiplied by a factor of 2, 4, 8, 16, 32, and 128, respectively, as indicated by a multiplication factor calibration above the bandswitch control in order to obtain the comparison frequency. The algebraic sum of the above product and the a-f meter reading (with regard to sign) is the frequency of the unknown signal.

The direction of the a-f meter reading with respect to the receiver crystal mixer comparison frequency and hence the sign to be used in the frequency equation, is determined by use of the a-f meter as an indicator. A means of offsetting the temperature controlled crystal oscillator in the a-f-c loop by minus 1 2/3 cps is provided by a push button on the meter front panel. This will change the receiver crystal mixer comparison frequency, and hence the audio frequency meter reading, by 50 cps on band 1.

If the unknown lies below the comparison frequency, the a-f meter reading will be reduced by that amount; if the unknown is above the comparison frequency, the a-f meter reading will be increased. At other frequency bands the a-f meter change will be equal to 10 percent of the full scale reading. The magnitude of the change is of no consequence except that it must be an amount easily perceived on the a-f meter.

The over-all accuracy of the frequency meter is dependent upon the accuracy of positioning the D.P.O. and the accuracy inherent in the a-f meter including the reading error. It has been previously shown that the D.P.O. frequency may be held to within approximately 2 ppm. The a-f meter full scale ranges are shown below for the corresponding frequency bands.

Band	Range	Frequency Band
1	0-500 cps	5-10.999 Mc
2	0-1 kc	10-21.998
3	0-2	20 to 43.996
4	0-4	40 to 87.992
5	0-8	80 to 175.984
6	0-16	160 to 351.968
7	0-32	320 to 703.936
8	0-64	640 to 1407.872

A maximum a-f meter error of 1 percent of the full scale value may be assumed to include both calibration and reading errors. On the 10 to 21 Mc range, this would amount to 10 cps for any unknown frequency in the band but the error in parts per million would be greatest at the low end of the frequency band where it will be $10/10 \times 10^6$ or 1.0 ppm. The a-f full scale reading is selected for each frequency band and the error in ppm is the

same at the low end of each frequency band. Since the maximum over-all error will occur when all individual errors are additive, the maximum over-all error would then be 3 ppm or less as shown below for several representative frequencies.

The over-all accuracy of the frequency meter may be shown by the maximum possible error expressed in parts per million as follows:

$$= \text{C. O. tolerance in ppm} + \text{D.P.O. disciplining tolerance in ppm} + \frac{\dfrac{\text{a-f meter full scale range in cps}}{100}}{\dfrac{\text{Unknown frequency in cps}}{10^6}}$$

From the above equation the over-all frequency meter accuracy of measurement may be shown for any frequency. A few examples are shown below.

At 10 Mc the maximum error of measurement $= 1.0 \text{ ppm} + 1.0 \text{ ppm} + \dfrac{\dfrac{1000}{100}}{\dfrac{10 \times 10^6}{10^6}} \text{ ppm}$

$= 1.0 \text{ ppm} + 1.0 \text{ ppm} + 1.0 \text{ ppm}$

$= 3.0 \text{ ppm}$.

At 100 Mc the maximum error of measurement $= 1.0 \text{ ppm} + 1.0 \text{ ppm} + \dfrac{\dfrac{8000}{100}}{\dfrac{100 \times 10^6}{10^6}} \text{ ppm}$

$= 1.0 \text{ ppm} + 1.0 \text{ ppm} + 0.8 \text{ ppm}$

$= 2.8 \text{ ppm}$.

At 1000 Mc the maximum error of measurement $= 1.0 \text{ ppm} + 1.0 \text{ ppm} + \dfrac{\dfrac{64{,}000}{100}}{\dfrac{1000 \times 10^6}{10^6}} \text{ ppm}$

$= 1.0 \text{ ppm} + 1.0 \text{ ppm} + 0.64 \text{ ppm}$

$= 2.64 \text{ ppm}$.

DECADE DIVIDER

Of the circuits required in the frequency meter only the decade divider will be described in detail since the other circuit principles employed are known to the art and require only adaptation. Direct reading multiple place decade dividers, however, are not well known to the art.

Since successful operation of the proposed frequency meter hinged upon the ability to produce a reliable decade divider, development work was begun on these circuits. The decade divider was chosen as the means to provide frequency adjustment

because it does not rely upon tuned circuits and hence is not a frequency sensitive divider.

Each decade of the four-decade divider contains four binary dividers which in themselves are capable of producing one output cycle for each group of 16 input cycles. The circuit of the binary divider is shown in Figure 2 and is a modified Eccles-Jordan trigger circuit. Since it is direct coupled between triode stages, the triode which first begins to conduct will continue to conduct unitl an input signal of sufficient amplitude is applied which will cause the other triode to conduct and the first to be cut off. Either of these conducting states is a stable condition.

In order to describe the operation it may be assumed that T_1 is conducting and T_2 is cut off. With the constants shown the voltage at P_1 will be approximately 130 V and the voltage at P_2 will be 270 V which is slightly less than the 300 V supply due to current flow through the high resistance bleeder string to ground. Tube T_1 will be drawing zero bias current and T_2 will be cut off by the voltage of:

$$E_{g_2k} = E_k - E_{g_2} = E_k - \left(\frac{R_6}{R_4 + R_6}\right) E_{p_1}$$

$$= 58 - \left(\frac{68K}{180K + 68K}\right) \times 130 \cong 58 - 35$$

$$\cong 23 \text{ V.}$$

Under these conditions the anode of the crystal connected to P_1 will be at a potential of 130 volts and the anode connected to P_2 at 270 V. The common connection between the two crystals will assume the higher potential and therefore will be 270 V. It may be seen that a positive pulse will not feed through in a significant amplitude to cause a change in the circuit because of crystal polarity. A negative pulse will feed through to P_2 since no bias

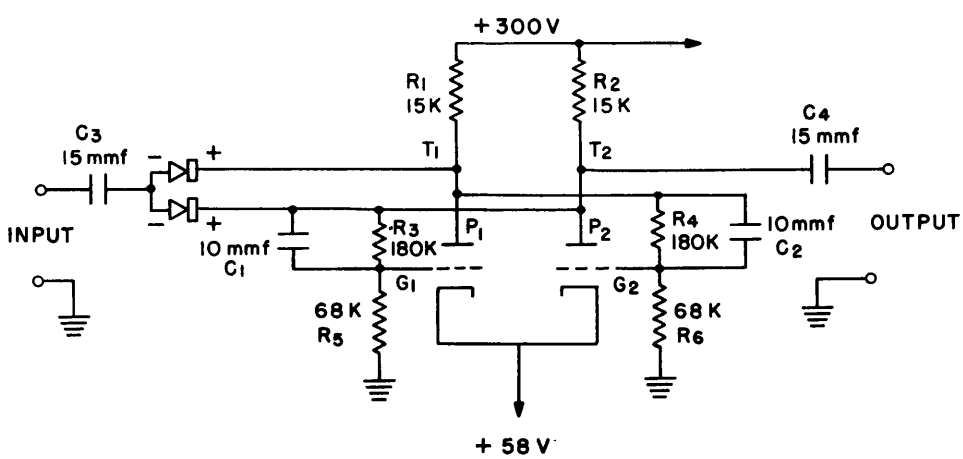

Figure 2 - Binary divider - schematic diagram

exists across that crystal. However, the crystal to P_1 has a bias of 140 V. The input signal is differentiated through the 15 mmf input condenser, the zero bias crystal, and R_2. The input voltage to the other crystal will never approach 140 V and hence cannot conduct. The negative pulse which has been coupled to P_2 is also coupled to G_1 through a 10 mmf condenser. This tube, due to the "Miller Effect" will have an average input capacity of:

$$C_{in} = C_{gk} + (\text{Avg. Gain} + 1)C_{gp}$$

which is approximately equal to 30 mmf for a type 6J6 tube. For this reason only $10/(30+10)$ or 1/4 the voltage through the condenser will reach G_1. Cut-off of a type 6J6 tube is approximately 6 volts so it is necessary that the negative pulse into the 10 mmf condenser be 4 x 6 = 24 volts. A voltage of this amplitude will then drive T_1 to cutoff, raise P_1 to 270 V, raise G_2 to 58 V, and cause T_2 to conduct at zero bias current. Similarly, T_1 will conduct and T_2 will be cut off by the next negative input pulse. Thus, it may be seen that for each negative input the polarities of P_1 and P_2 will reverse.

The crystal polarities indicated in Figure 2 require that a negative pulse be applied to key the binary divider. By reversing the polarity of both input crystals only a positive input pulse will key the divider. It can be shown that a shorter keying time is gained through negative pulse keying and hence is beneficial in the decade divider circuit.

The input frequency to the first binary divider might be as high as 366.63 1/3 kc, and the input to other binary dividers may be as low as 66 2/3 cps. To insure operation within this range the design of the binary divider circuit has been made to provide operation over a still greater range. Since the low frequency approaches a d-c condition and the cathode bias and cross coupling resistance ratios determine the static condition of operation, they have been chosen to provide an equal voltage swing above and below the cathode bias as the divider is changed from one stable d-c state (T_1 conducting) to the other, (T_2 conducting). The voltage above zero bias is not realized as grid current flows, but greater stability is obtained by centering this voltage swing. The value of the cross coupling condenser, among other factors, determines the maximum frequency at which the binary will operate. This capacity must be very low so that the time constants in the plate circuits are low and the rise and fall times may be minimized. Lowering the capacity raises the magnitude of the input voltage required to trigger the binary as shown previously. Therefore, the cross coupling condenser has been kept as small as possible and yet permit keying with the available signal voltage.

A table of polarities, Table 1, may be compiled for four similar binary dividers in cascade. A plus (+) sign indicates that the tube is cut off and the voltage at the plate is approximately that of the supply voltage. A minus (-) indication is used when the tube is conducting zero bias current and the voltage at that plate is equal to the difference between the voltage developed by that zero bias plate current through the plate resistor and the B supply voltage.

Inspection of Table 1 will show that for any number of negative input pulses (column 1) three positive plates may be chosen such that the three selected plates have not simultaneously been positive previous to the negative pulse number selected. The encircled plates are an example of one possible choice for each count of one through ten. This table may be carried to a maximum number of 32 negative input pulses before repeats occur, but in a decade divider only the first 10 are of importance.

The three selected plates are coupled to a triple-coincidence mixer circuit which will produce an output pulse when the three inputs are positive simultaneously. The mixer

TABLE 1
Binary Divider Plate Polarities

Number of Negative Input Pulses	Binary Plate Polarities							
	Binary 1		Binary 2		Binary 3		Binary 4	
	P_1	P_2	P_3	P_4	P_5	P_6	P_7	P_8
0	+	-	+	-	+	-	+	-
1	-	⊕	⊕	-	⊕	-	+	-
2	⊕	-	-	⊕	⊕	-	+	-
3	-	⊕	-	⊕	⊕	-	+	-
4	⊕	-	⊕	-	-	⊕	+	-
5	-	⊕	⊕	-	-	⊕	+	-
6	⊕	-	-	⊕	-	⊕	+	-
7	-	⊕	-	⊕	-	⊕	+	-
8	⊕	-	⊕	-	+	-	-	⊕
9	-	⊕	⊕	-	+	-	-	⊕
10	⊕	-	-	⊕	+	-	-	⊕

output is then coupled back to each of the four binary dividers to reset them to the original reference position which is shown as the zero negative pulse number on the polarity table. By the use of a three-wafer, single-pole, 10-position, rotary switch it is possible to select any of the negative pulse numbers of 1 through 10 as shown on the table. The triple-coincidence mixer output pulse occurs at a rate which is the exact division ratio of the selected negative pulse number. This divider may then provide division ratios of one through ten by selection of switch positions.

It is possible to select division ratios as great as 100 by cascading two such decade dividers, but only division ratios whose integer factors are ten or less may be obtained. None of the prime numbers above 10, such as 11, 13, 17, 19, etc., can be obtained in this manner.

In order to select all numbers including prime numbers an additional triple-coincidence mixer has been added to the above decade divider. It may be seen that a prime number, such as 43, is made up of the units digit plus the tens digit number of tens, or, in this case 3 + 10 + 10 + 10 + 10 = 43. Therefore, if the first or units divider is first arranged to count the units digit, then be switched to count by 10 before providing an output pulse, and thereafter provide one output pulse for each 10 negative input pulses before being reset to the initial condition, the prime numbers may be obtained. The additional mixer permits all division ratios including prime numbers to be obtained and in addition makes the divider a direct reading decade system since the units control may be set to the units digit and the tens control to the tens digit. The additional mixer is necessary in all but the last decade of a multiple decade divider. The mixer which provides division ratios of 1 to 9 will be called the "variable mixer" in the following discussion and the added mixer which provides a fixed division ratio of 10 will be referred to as the "fixed mixer."

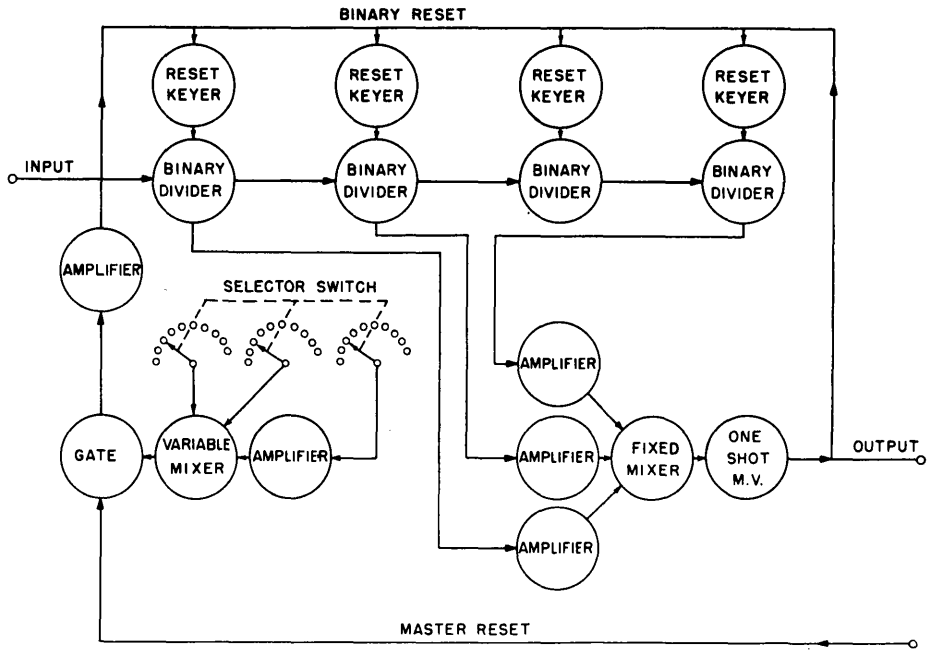

Figure 3 - Block diagram of single-decade divider

Figure 3 is a block diagram of a single-decade divider. The inputs to the fixed mixer are connected for fixed division by 10 while the inputs to the variable mixer may be selected by a rotary switch for division by any number of 1 through 9.

In the counting procedure the units count occurs first. The variable mixer provides an output pulse which will key an electronic gate that in turn resets the binary dividers to the initial condition. Once the gate is keyed by the variable mixer it is disabled until reset by the master reset. Therefore, the second time the units count is reached the variable mixer will put out a pulse which will not be passed by the gate; hence the binaries continue until a total of the units number plus 10 input pulses have been counted. The fixed mixer will reset the binary dividers but not the gate so that the fixed mixer will continue to divide the input by 10 until a pulse from the master reset lead resets the gate. The output pulse of the last decade of a multiple decade divider is also fed back to all other decades to provide the master reset pulse. This pulse resets the gate tube of each decade as well as the binary dividers of the last decade. The entire process will automatically repeat in this manner to divide continuously by the selected number.

Additional decade dividers may be added to extend the maximum division ratio providing the maximum input frequency limit is not exceeded. In the proposed frequency meter a four decade divider is used which provides a maximum division ratio of 10,999. Figure 4 shows a block diagram of the over-all four decade system which illustrates the required interconnections and switching arrangement necessary to obtain division by any number from 1 through 10,999.

For obtaining most of the division ratios, the output of the units-decade, fixed-mixer is coupled to the input binary divider of the tens decade. The following decades are similarly coupled. Division ratios which involve zeros require a special switching arrangement.

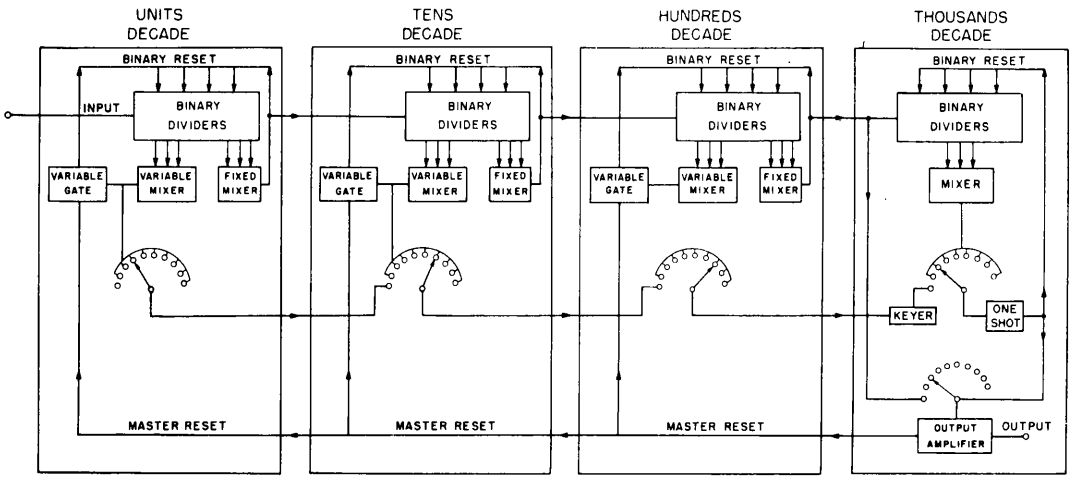

Figure 4 - Block diagram of over-all four-decade system

In each decade it has been possible to gang these switches with the variable-mixer, input-selector, rotary switches so that only one front panel control is required for each decade.

A zero-position bypass switch is required in the tens, hundreds, and thousands decades. Its purpose is to obtain ratios which involve a zero preceding a significant number, such as: 0333, 0033, or 0003. This switch, as its name implies, by-passes the decade which is set to zero position. A second case which requires attention also exists when a zero follows a significant number such as 3000, 3300, and 3330. In this case the decade set to zero should count only by ten. This can be accomplished by merely omitting connections to the zero position of each decade selector switch.

A switch peculiar to the last of the decades, the thousands decade in this system, is the zero position reset switch. If any of the electronic gates initially assumes the wrong polarity when the last decade is set to zero, the variable mixer cannot provide an output pulse, but the fixed mixer will erroneously put out a pulse after 10 input cycles to that decade. Thus a pulse will always feed through to the input of the last or thousands divider. The first pulse obtained at this point is coupled back through the zero position reset switch to the master reset bus which will set all of the electronic gates and binary dividers to the starting reference condition. Thereafter the count will be exactly that ratio selected.

The mixer and reset circuits of the decade dividers are shown on Figure 5, the schematic diagram of the tens decade divider. From this it may be seen that d-c coupling has been used to couple the selected binary plates to the control and suppressor grids of the mixer and that the screen grid is a-c coupled through an amplifier stage. Reference to Table 1 will show that one possible selection of binary divider plates has been encircled. It is apparent from this selection that the first binary divider is selected for each division ratio and that the polarity of each plate changes with each negative input pulse. It is therefore necessary that the mixer stage provide an output pulse simultaneously with a change in polarity of the selected plate of the first binary divider. This is not true in the case of the plate selections of the 2nd, 3rd, and 4th binary dividers. In the extreme case, plate 5 (3rd binary) remains positive for three input pulses when a count of three is selected, and the reset causes the plate to remain positive. Since that plate is always at the same potential, a d-c condition exists for counts of 1, 2, and 3. Hence, it is not possible to

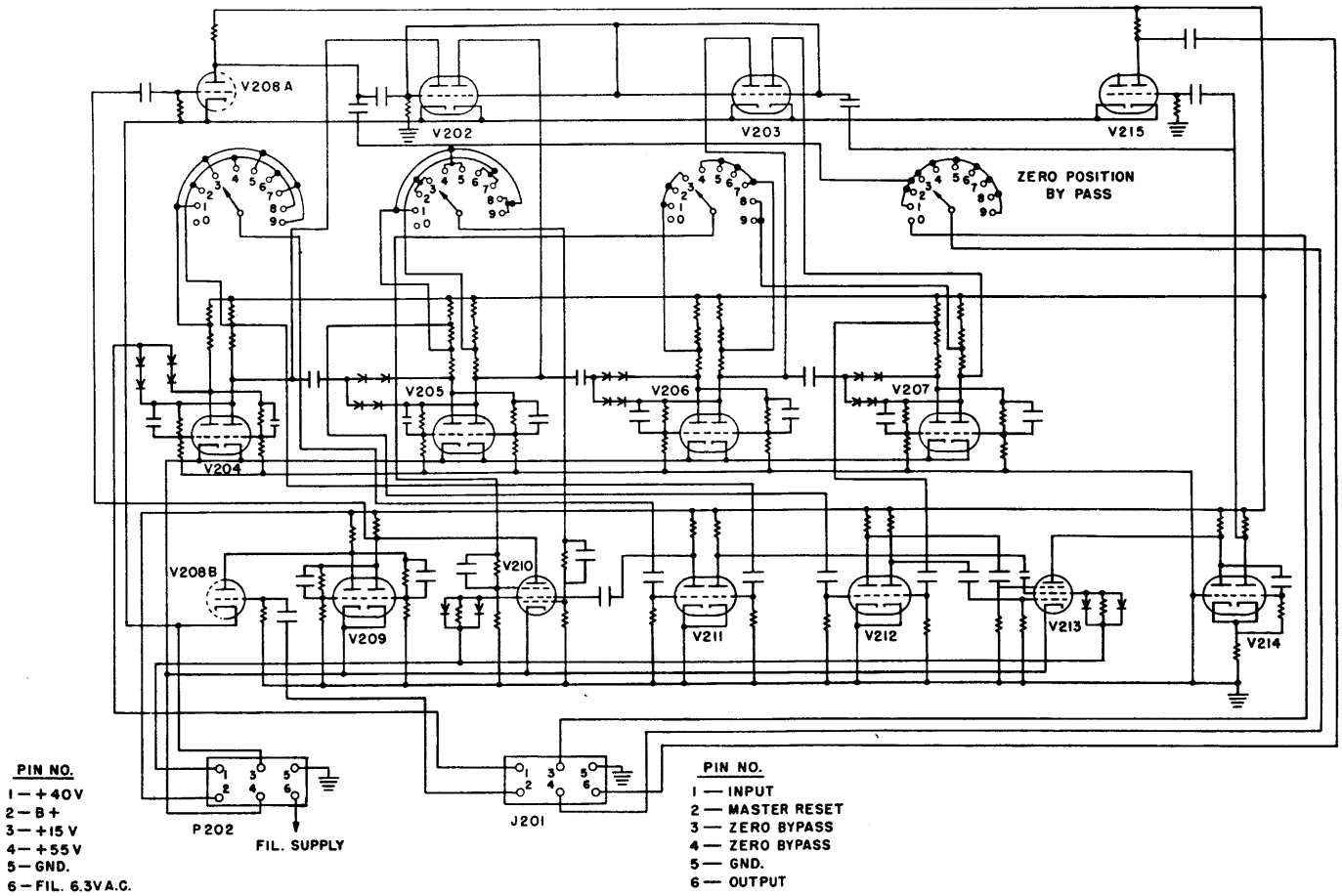

Figure 5 - Tens decade divider - schematic diagram

capacity couple to the mixer grids from any but the first binary divider for division ratios of 1, 2, and 3. For ratios greater than three it is possible to capacity couple provided the RC product is sufficient to maintain the mixer grid at zero bias for the lowest frequency (66 2/3 cps) which will be encountered.

It is necessary to provide sufficient driving power to the screen grid of the mixer to enable the variable mixer to key the electronic gate tube. Although an unloaded binary divider plate provides a square wave output pulse of 50 percent duty cycle with a rise and fall time of 0.2 microseconds, the rise and fall times are lengthened and the corners of the output pulse are rounded when the plate is excessively loaded. Since the fall time of the pulse output of one binary divider is differentiated to key the following binary divider, an increase in fall time will greatly decrease the differentiated output and keying of the binary divider string will become erratic. In addition, the lengthened rise and fall times at the mixer grid circuit cause delay in the mixer output pulse, hence the decade reset time is increased. Use of an amplifier permits minimum loading of the binary divider plate; yet sufficient power gain is realized to drive the mixer screen grid to more than plus 50 volts. Since the first binary divider is used for all counts and each plate changes polarity with each negative input pulse an a-c signal exists which may be amplified. Therefore the output of the first binary is always used to drive the screen grids of both the mixer stages through one stage of a-c amplification. It is necessary to select the negative going binary plate so that the amplifier inversion will produce a positive mixer grid pulse.

A type 6AS6 tube has been selected for the triple coincidence mixer because it has the advantage over other pentodes or mixers of possessing low cut-off voltages on each of three independent grids which includes the screen grid. The variable-mixer stage (V210) is designed as a plate keyer of the variable gate tube. The screen grid is normally cut off with a bias of 15 volts below the cathode potential. A pair of type 1N34 germanium crystals in parallel prevent back biasing of the screen in excess of 15 volts. The cathode of the mixer is raised to the potential of the binary cathode bus. Coupling resistors which direct-couple the binary plates to the mixer control and suppressor grids adjust the pulse voltage swing above and below the cathode potential by approximately equal voltages. When a binary plate is down (negative indication) the corresponding mixer grid is biased approximately 15 volts below the cathode. When the three grids of the mixer are positive simultaneously, a negative pulse is produced by the voltage drop through the common plate load resistor of the mixer and gate tube, thereby keying the gate tube.

The variable gate consists of a double triode of a design similar to the binary dividers, but without the crystal coupling. Only the first plate is keyed (down) by the mixer negative pulse output and thereafter that plate remains down until a negative reset pulse from the master reset bus is applied to the second plate, also through a plate keyer. At the time the mixer keys the variable gate, the gate output is fed through an amplifier (V208A) which inverts the polarity and feeds the binary reset plate keyers.

In this reset circuit several precautions have been taken to assure stable operation. Differentiation in the reset amplifier grid circuit and in the binary reset keyer grid circuit reduces the width of the pulse applied to the binary reset keyer and minimizes the length of time during which the binary dividers are held in the zero reference condition. This time must be less than the time of one cycle at the highest input frequency. The reset amplifier (V208A) performs several functions. It permits use of the negative going gate tube output pulse which is much faster than the rise time of the opposite plate that occurs at the same time. The amplifier acts as an inverter. Since gain is obtained through the amplifier stage, the loading of the gate tube may be reduced to maintain the steep fall time characteristic of the gate output, yet provide sufficient output to trigger the binary keyers. The amplifier adequately isolates the output of the fixed one-shot multibrator from the plate of

the gate tube; otherwise the gate would be reset by each output pulse from the one-shot multivibrator.

The grids of the binary reset keyers are fed in parallel from the output of either the reset amplifier or the fixed count one-shot multivibrator (V214). The number of components have been minimized by operating these tubes as normally cut-off plate keyers. The load resistor of the second plate of each binary divider is common for one of the four reset keyer plates.

The binary divider plates to which the negative reset pulse is applied is predicted by the polarity selection of the initial operating or reference condition. Table 1 has been determined on the basis of a negative reset pulse applied to the even numbered binary divider plates 2, 4, 6, and 8 which are shown to be negative for the zero input pulse or the reference condition. The bias of the reset keyers must be sufficient to eliminate feed through from resetting the binary dividers, but must not be excessive or the reset time will be lengthened. An undesired coupling path exists between the plate of the binary reset amplifier (V208A) and the grid of output amplifier (V215), via the binary reset keyer bus, but the coupling condensers in this loop are small and only about 0.1 volt reaches the grid of the output amplifier, and about 1.5 volts is present in the output circuit. A pulse of at least 60 volts is required at this point to trigger the next decade, and the normal one-shot multivibrator output pulse is approximately 80 volts, so 1.5 volts is considered negligible.

A positive pulse reaches the second plate of the one-shot multivibrator stage through this coupling but is of insufficient amplitude to affect the one-shot operation.

The binary plate connections to the fixed-count mixer grids have been so selected that the three mixer grids are simultaneously positive at the tenth input cycle following the binary divider reset through the variable reset circuit. The plate connections have been chosen so that a-c coupling was possible and amplifiers were used to supply each of the mixer grids in the fixed-count mixer. These amplifiers (V211B and V212) are zero biased which provide a positive output pulse but require a negative input pulse. In this case the negative plate of the selected binary has been used. These amplifiers aid greatly by reducing the load on the binary dividers which at the same time maintain minimum keying time.

The negative, fixed-count mixer output pulse plate-keys the fixed count one-shot multivibrator. The positive pulse from this one-shot multivibrator performs two functions. First, it resets the binary dividers within the decade. Second, it feeds the output amplifier to provide the output pulse. The time constant of the one-shot multivibrator is adjusted for an output pulse width of 1.8 microseconds. This is differentiated in the grid of the binary reset keyer for reasons previously stated. Since the one-shot multivibrator recovers to its initial state after 1.8 microseconds it is ready to be keyed again after the next ten input cycles occur. This process continues until the variable gate is reset by a positive pulse on the master reset bus.

A table of binary plate polarities may be determined for reset applied to the odd numbered plates 1, 3, 5, and 7. Both tables have been investigated and each possesses some advantages over the other.

The over-all four-decade divider is shown on the schematic diagram, Figure 6. The tens and hundreds decades are identical. The units decade utilizes one additonal 6J6 envelope (V101) in which the two triodes are wired in cascade as a pulse shaping circuit to provide a fall time of less than 0.4 microseconds from a sine wave input of 166 2/3 to 366.63 1/3 kc. The thousands decade requires the variable mixer but not the fixed count mixer.

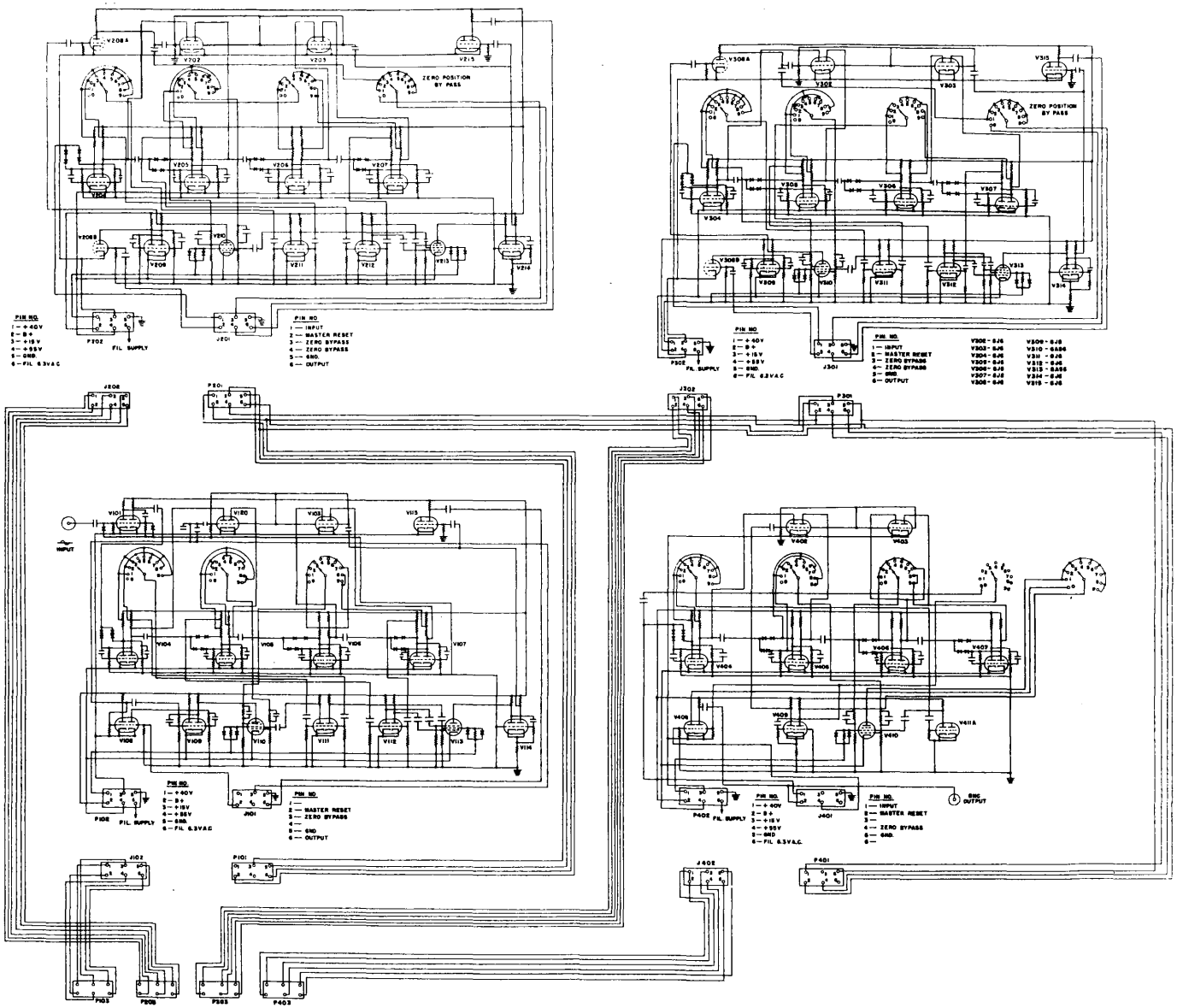

Figure 6 - Over-all four-decade - schematic diagram

This page intentionally left blank.

In addition to these noted differences are the variations in switches. The use of these switches has been previously described.

In the thousands decade the variable-mixer output plate-keys a one-shot multivibrator. The negative one-shot multivibrator output is fed to an amplifier capable of driving the master reset bus. A plate keyer is used in this decade to key the one-shot multivibrator when the thousands switch is set to the zero position and the output from the units, tens, or hundreds decade is coupled through the zero position by-pass switch to supply the pulse which initiates the master reset pulse.

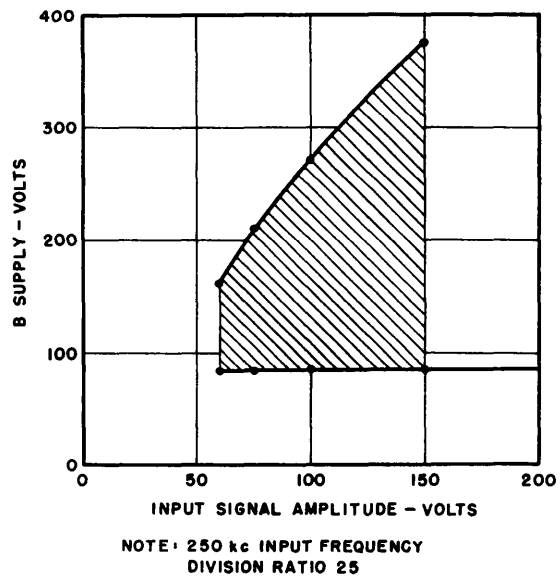

Figure 7 - Two-decade divider input voltage operating range

SIGNIFICANT DEVELOPMENT PROGRESS

The design of the decade dividers has been completed. Two models have been constructed, one a units decade and the other a thousands decade, and both have been successfully operated. A miniaturized version of the tens decade has been constructed but has not yet been fully evaluated.

The results of measurements conducted on the units and thousands decades indicate that their operational characteristics adequately fulfill the requirements for use in the proposed frequency meter. All counts of 1 through 100 have been obtained with the combination of the two decades. The stability is excellent for variations of input signal, B supply voltage, and input frequency.

The minimum input signal amplitude at which the decade divider will operate is dependent upon the B supply voltage and must be increased for an increased B supply voltage. Figure 7 shows this characteristic with the shaded area an indication of the operating range. The curve may be extended for higher B supply and input voltages but adequate supplies were not available. In the application of this divider in the frequency meter, the voltages will be self compensating, i.e., the input amplitude will increase with increase in B supply voltage. This occurs throughout the divider circuits and hence voltage regulation is unnecessary.

When the two-decade divider was operated within the limits of Figure 7, reliable division could be obtained for input frequencies as high as 510 kc in the worst case. Figure 8 shows the maximum operating frequency at several division ratios when the B supply was 250 volts and the input amplitude 150 volts.

The B supply current requirements of the units and thousands decades are shown on Figure 9. The thousands decade has a lower current drain because it has only the variable-mixer circuit and not the fixed-mixer circuits. The decade dividers are not sensitive to input frequency variations when the input amplitude and fall time are within the previously stated operating range. There is, however, a maximum operating frequency predicated by the divider over-all reset time. The over-all reset time is composed of two parts. The first is the time required to key the binary reset tubes from the instant the negative

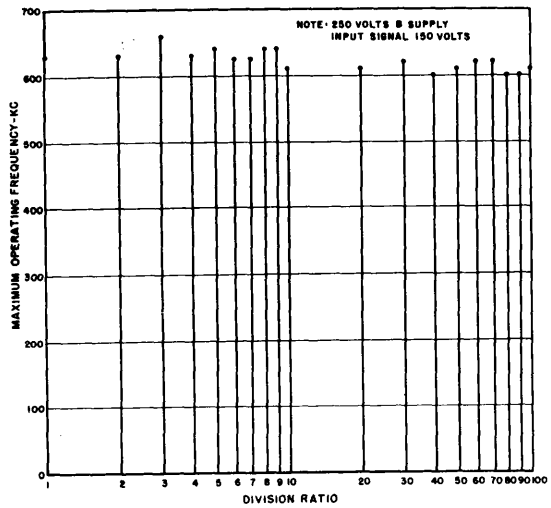

Figure 8 - Two-decade divider maximum operating frequency

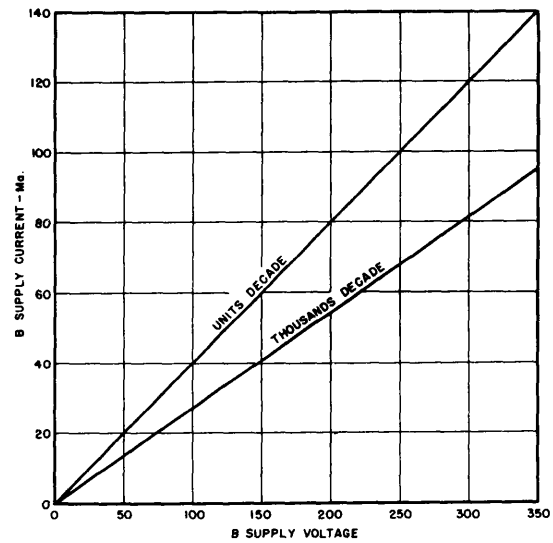

Figure 9 - Decade divider - B supply power requirements

input pulse is applied to the instant the reset pulse is initiated. The second is the time during which this reset holds control over the binary divider and gate tube due to the width of the reset pulse. When the time of the combination of these two factors equals the time of one sine wave, input cycle instability occurs. The reset time has been measured and found to be 0.5 microsecond per decade and 1.0 microsecond for the combination of two decades. The reset pulse is 1.8 microseconds wide, but is differentiated, and control of the binary dividers by the reset keyers is lost shortly after the peak of the reset pulse. This time is 0.5 microsecond. The total reset time for two decades is therefore 1.0 + 0.5 = 1.5 microseconds. For four decades the reset time would be 4 x 0.5 + 0.5 = 2.5 microseconds. The maximum frequency of reliable operation was measured and found to be 510 kc in the worst possible case for two decades in cascade. At other counts a higher maximum frequency was obtained.

Since the input frequency range to the units decade will be 166 2/3 to 366.63 1/3 kc, the input shaping circuit is not difficult to provide. One envelope consisting of a double triode type 6J6 tube is sufficient to provide the gain and clipping necessary for a pulse output in excess of 63 volts with a fall time better than 0.4 microseconds. The input to the first triode must be in excess of one volt.

The miniaturized model of the tens decade has been constructed on a chassis 4 1/2" x 9 1/4" x 3". The four binary dividers have been wired as separate plug-in units each having an octal base. A three-quarter view is shown on Figure 10 and in Figure 11 with one binary divider removed. Figure 12 is a view of the binary divider which shows the shield cover removed and the wiring exposed. Since much of the wiring is contained within the binary shield, the chassis wiring is less complicated as shown on Figure 13. The decade divider form factor is considered to be good for the mechanical layout of the frequency divider. It is possible to further miniaturize each decade, but no attempt will be made until an entire working model of the frequency meter has been constructed.

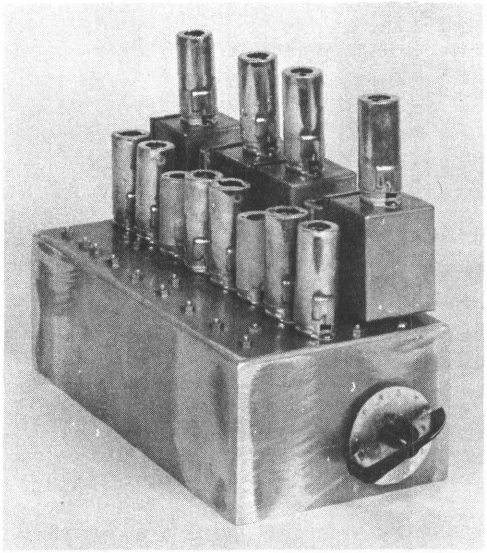

Figure 10 - Miniaturized model - tens decade divider

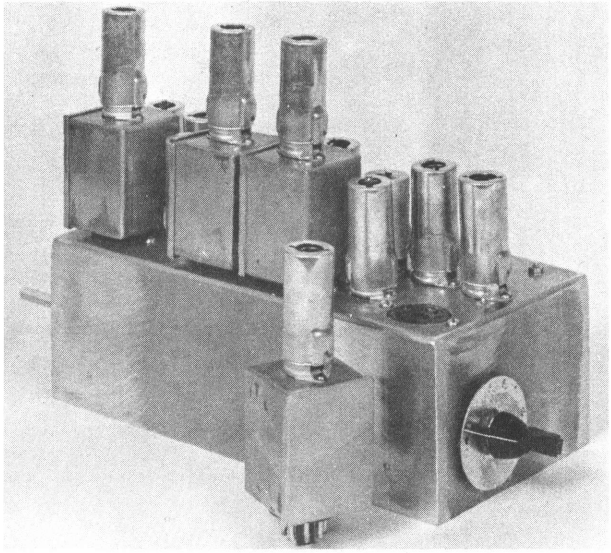

Figure 11 - Miniaturized model - one binary divider removed

FRONT PANEL CONTROLS

The front panel of the proposed frequency meter is shown by the drawing on Figure 14. The controls and indicator which are involved in the final frequency reading are arranged in the order of a very simple frequency equation. The following nomenclature may be assigned to the corresponding controls and indicator:

A - Thousands decade control

B - Hundreds decade control

C - Tens decade control

D - Units decade control

E - Bandswitch multiplier control

F - a-f meter reading

The frequency equation then becomes:

$$(ABCD) \times E \pm F = \text{Measured Frequency in Mc.}$$

The decimal of the ABCD term is read directly from the indicator.

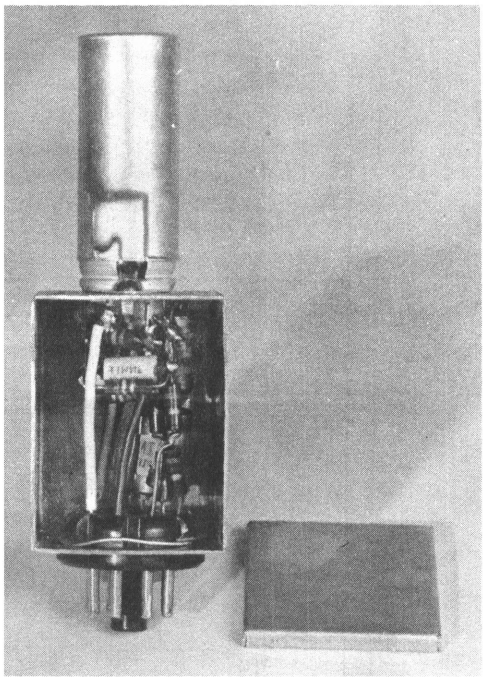

Figure 12 - Plug-in binary divider wiring exposed

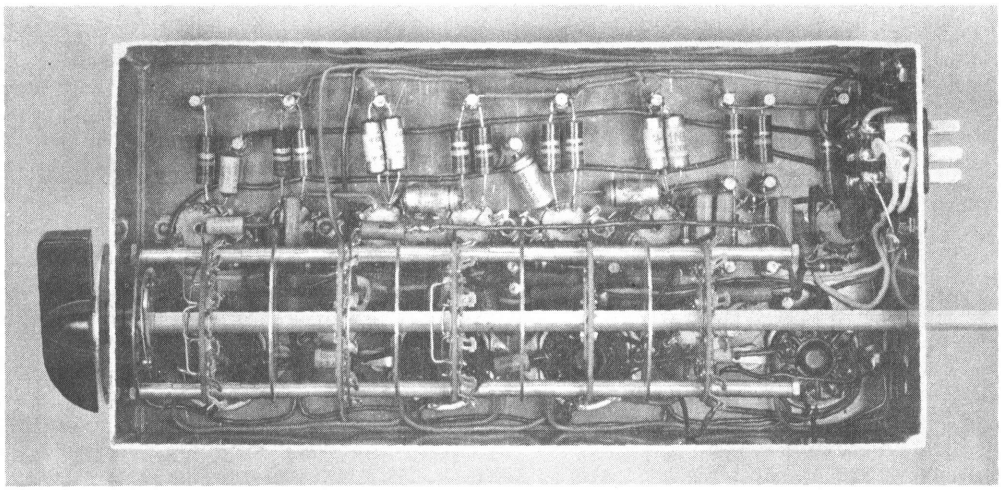

Figure 13 - Miniaturized model - chassis wiring

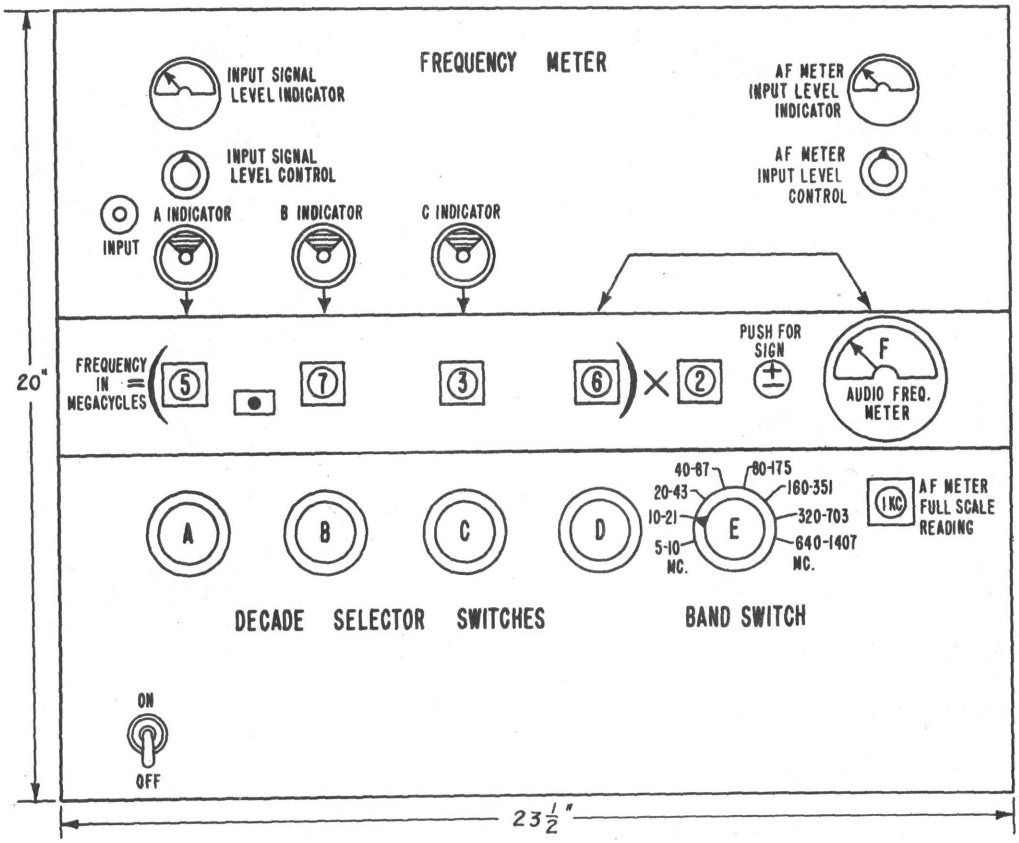

Figure 14 - Front panel diagram - frequency meter

Control A is a six-position rotary switch; B, C, and D controls are 10-position rotary switches; E control is an eight-position rotary switch. The indicator for each of the decade controls and the multiplication factor of E is a number on a disc which appears behind a window on the front panel. A calibration of the frequency band appears at control E. Calibration range of the indicators is as follows:

A - 5 through 10

B - 0 through 9

C - 0 through 9

D - 0 through 9

E - Band (5-11 Mc) (10-21 Mc), (20-43 Mc), (40-87 Mc), (80-175 Mc), (160-351 Mc), (320-703 Mc), and (640-1407 Mc).

E - Multiplication Factor 1, 2, 4, 8, 16, 32, 64, and 128.

Meter F full scale ranges - 0-0.5 kc, 0-1 kc, 0-2 kc, 0-4 kc, 0-8 kc, 0-16 kc, 0-32 kc, 0-64 kc.

Bandswitch "E" divides the 5 to 1407 Mc range into eight frequency bands which are those shown by the calibration of the bandswitch control and are labeled at the control knob. The multiplication factor is shown in the window above the bandswitch control. The a-f meter "F" has eight ranges. Since the range of the a-f meter is determined by control "E," the indicators have been mechanically ganged so that the positions of "E" select the proper scale for "F." Other front panel accessories include the input connector, and input signal level indicator, an input signal level control, three electronic eye indicators, an a-f meter input level indicator, an a-f meter input level control, and an off-on switch.

The addition to the frequency meter front panel of a 913 type cathode ray tube, a brilliance control, and a push button would provide the means to check the comparison frequency against the crystal oscillator. This feature could be used occasionally to insure that the D.P.O. and the associated a-f-c circuits are functioning properly. Operation of the push button energizes the type 913 cathode ray tube. A frequency doubler which multiplies the 100 kc crystal oscillator frequency to 200 kc is connected to one set of the oscilloscope deflection plates. The D.P.O. frequency is applied to the other set of deflection plates. When the decade controls are set to 6000, a 1:1 Lissajous pattern should be observed on the oscilloscope. Since the frequency positioning accuracy of the D.P.O. is normally within one ppm the pattern may rotate at a rate of five seconds or more per cycle. A similar check may be made at 300 kc if the crystal oscillator frequency is tripled and the decade controls are set to 9000. In this case a 1:1 Lissajous pattern is observed which may rotate at a rate of approximately 3 1/3 seconds or more per cycle.

OPERATING PROCEDURE

Measurement of Single Stable Input Frequencies

The operating procedure is quite simple and direct. When the input frequency is known to within the limits of a single bandswitch position, and is within bands 1, 2, 3, 4, or 5, that control is positioned to the appropriate band. The decade controls are set to 5500 and the thousands control is then adjusted to the single position at which a deflection is observed

on the thousands indicator. The input signal level control is adjusted to cause the input signal level indicator to read within the operating limits portion of the scale. The tens decade control is set to position 5 and the hundreds decade control adjusted to the position where a hundreds indication is observed. The units control is set to position 5 and the tens control adjusted for a tens deflection. The units control is adjusted to the single position at which an a-f meter reading is obtained and the a-f meter input level control is adjusted to set the a-f meter level indicator within the operating limits shown on that meter scale. The ± push for sign button is pressed and the direction of change in the a-f meter reading is noted. If the meter reading is increased by 10 percent of the full scale value the original reading is added in the frequency equation; if it is not increased by 10 percent the previous reading is subtracted. The decade divider calibration is multiplied by the multiplication factor that appears above the bandswitch control to produce the comparison frequency. The sum of this frequency and the a-f meter reading (with regard to sign) is the unknown frequency.

If the unknown appears in bands 6, 7, or 8 the decade controls are set to 5550 and the hundreds indicator is observed while searching all positions of the hundreds control for each of the six positions of the thousands control. The hundreds indicator will deflect only at the single correct hundreds and thousands control setting. From this point the frequency measurement is continued as described above.

When the band setting is unknown it is necessary to first locate the proper bandswitch position. This is accomplished by starting with band 1, while the last three decade controls are set to 500, and searching all thousands switch positions and observing the thousands indicator. If an indication is observed the proper bandswitch position has been selected. If no indication is located the bandswitch is advanced to band 2 and the thousands control again searched. This process is continued until the proper band is located. It should be noted that if bandswitch positions 6, 7, and 8 are used, adjustment of both the thousands and the hundreds controls must be made with the tens decade set to position 5 and the units to zero. Once the proper bandswitch setting has been located the measurement procedure is as previously described.

Since it is impossible to design and provide a perfect filter, there will be occasions where a frequency slightly beyond the desired filter cut-off frequency will feed through the filter circuit and provide an indication. In the proposed frequency meter this condition can exist and may appear as a response at each of two adjacent positions in either the thousands, hundreds, or tens controls, or may appear as a deflection beyond the a-f meter full scale reading in the case of the units control. For example, on band 1 the unknown frequency may be 6.05 Mc and if the last three decade controls are set to 500 a deflection may be observed with the thousands switch adjusted to either position 5 or 6 when the correct position should be 6. If, however, position 5 is selected and the hundreds control adjusted with the last two controls set to 50, it is not possible to obtain a deflection for any setting of the hundreds control since the unknown is 6.05 Mc, and the closest hundreds step is 5.95 Mc which produces a beat note of 100 kc that will not pass through the 50 kc hundreds filter. In this case the operation is repeated with the thousands control set to the other position where a deflection was observed and it will then be possible to measure the frequency.

The unknown frequency might be such that double adjustments are possible on any of the first three decade controls. In all cases if the wrong setting of a double response is selected it will always be impossible to adjust the units control to obtain an a-f meter reading. In many cases the wrong choice may be determined by the inability to adjust the tens or hundreds controls for an indication instead of the units control. Again the control which produced the double response must be repositioned to the other setting where a response was obtained and a normal frequency measurement will be possible.

Measurement of Multiple Input Frequencies

The proposed frequency meter may be used to measure individually each frequency of multiple input frequencies impressed simultaneously on the input to the frequency meter provided that the input frequencies are separated by at least an amount equal to the a-f meter input filter actual cut-off frequency. This filter must pass a frequency of the full scale a-f meter reading without attenuation, and would possibly extend to a 20 percent higher value before significant attenuation is realized. On the 5 to 10.999 Mc band the filter must pass 500 cps and would provide 40 db attenuation at approximately 600 cps. Therefore, if the input frequencies in this band were spaced by 600 cps or more they could be individually measured. The conditions are similar on all bands so that the input frequencies must be separated by an amount of 20 percent greater than the a-f meter full scale reading of the band under consideration.

Measurement of Unstable Input Frequencies

Some input frequencies will exist that are relatively free of frequency drift but do possess within narrow limits some form of instability or modulation which may appear as jitter amplitude modulation, or frequency modulation. Other input frequencies will be unstable over a greater range due to excessive drift, jitter, or modulation. In the first case the a-f meter will waver about an average frequency value if the frequency changes occur at a low rate and the magnitude of the a-f meter instability is an indication of the input frequency instability. The a-f meter will have a finite time constant so that it will not respond to fluctuations which occur at a high rate of change. When the fluctuations are greater than the a-f meter full scale range, the limits of the instability may be determined by observing the range of the tens, hundreds, or thousands decade control settings over which a deflection of the corresponding electron ray indicator is obtained. If there is excessive frequency modulation on the input signal and the sidebands are separated by more than the a-f meter full scale range, each may be individually measured as previously described in the discussion of multiple frequency measurements.

PROPOSED FREQUENCY METER MODIFICATIONS

The frequency source generated within the frequency meter could easily be utilized as a signal generator by the addition of an output amplifier, a modulator, and an attenuator. These circuits could be combined with the frequency meter by enlarging the front panel dimensions or by adding a separate unit, and the signal generator would have the same frequency stability as the D.P.O.

A signal generator of this type would be highly desirable for alignment procedures and measurements which are not possible with commercially available signal generators because of excessive frequency drift and inaccurate dial calibration. For example, a signal generator having a frequency accuracy within 10 ppm is necessary to align properly and to make measurements of such equipments as the multichannel communication equipments.

It has been stated in the Introduction to this report that the most simple operation is highly desirable and that a completely automatic measuring device is a distinct possibility. An interim measure between the completely automatic and the present system is one in which the required multiplication would be mechanically accomplished and the final frequency product would be presented numerically. This would involve mechanical complications and additional weight, but would not be as extensive a modification as a completely automatic unit. In the latter system a motor drive and clutch arrangement would be

necessary to perform the searching process. However, neither of these automatic systems are under consideration at the present time.

CONCLUSIONS

The key circuit of the proposed frequency meter, which is the multiple decade divider, has been designed, developed, operated and found to fulfill adequately the requirements of the multiple decade divider. The results of the development substantiated the original theoretical concepts of multiple decade divider operation. Since other portions of the frequency meter contain circuits which are known to the art, it is concluded that the proposed frequency meter can be constructed to provide the following:

(1) A frequency range of 5 to 1407 Mc with an accuracy of measurement within three parts per million or 0.0003 percent.

(2) A simple and direct measuring procedure with the resultant frequency directly indicated by a front panel calibration without the use of any additional calibration curves or tables.

(3) Excellent stability in the frequency determining circuits with respect to voltage fluctuations, temperature changes, humidity, etc.

(4) High resolution for measuring one frequency in presence of other signals on nearby frequencies.

(5) An indication of the spectrum width of a measured signal.

(6) A stable frequency source for standard signal generator.

(7) A system well adapted for use of plug-in-units to facilitate ease of maintenance and ease of repair.

(8) A portable meter composed of two units; the frequency meter and a separate power supply.

* * *

NAVY-DPPO-PRNC-WASH. D. C. 3676