NRL Report 7078

Dislocation Channeling in Irradiated Metals

F. A. SMIDT, JR.

Reactor Materials Branch
Metallurgy Division

June 3, 1970

NAVAL RESEARCH LABORATORY
Washington, D.C.

This document has been approved for public release and sale; its distribution is unlimited.

CONTENTS

Abstract	ii
Problem Status	ii
Authorization	ii
INTRODUCTION	1
CRYSTALLOGRAPHY OF CHANNELS	1
CORRESPONDENCE OF CHANNELS WITH SURFACE SLIP TRACES	2
CHANNEL DIMENSIONS	3
SOME GENERAL OBSERVATIONS OF CHANNELING	4
AREAS REQUIRING MORE RESEARCH	4
Channel Initiation	4
Interaction with Loops	5
Work Hardening in Channels	6
Influence of Channeling on Macroscopic Properties	9
CONCLUSIONS	11
REFERENCES	11

ABSTRACT

The present understanding of the phenomenon of dislocation channeling, or the removal of defect aggregates from the slip plane by glide dislocations in irradiated or quenched metals, is reviewed. Channeling is a general feature of any system where penetrable defect aggregates are removed by the glide dislocations. The crystallography of the channels and their correspondence with surface slip traces is shown to be well established.

It is shown that several areas of the problem require further research in order to gain an adequate understanding of the phenomenon. In particular the mechanism of initiation of the channels, the dislocation-defect interaction mechanism in which defects are annihilated or assimilated, and the mechanism of work hardening, which stops further deformation in a channel, require further study. In addition, a quantitative correlation between (a) the microscopic parameters of channeling and (b) the macroscopic properties of the work-hardening coefficient and ductility is needed.

PROBLEM STATUS

This is an initial report on this problem; work will be continued.

AUTHORIZATION

NRL Problem M01-22
Project RR 007-11-41-5425

Manuscript submitted February 24, 1970.

DISLOCATION CHANNELING IN IRRADIATED METALS

INTRODUCTION

The formation of defect aggregates in a metal as a result of neutron irradiation or quenching produces pronounced changes in the mechanical properties. The resulting increase in yield strength is well known and has been extensively investigated. The phenomenon of channeling which occurs because the defect aggregates can be destroyed or assimilated by glide dislocations also produces marked changes in the mechanical properties, but this is not as well understood. Deformation of an irradiated metal leaves the glide plane swept free of defects, and these areas appear in transmission electron micrographs as cleared paths or channels through the material as shown in Fig. 1. Thus the terminology *dislocation channel* has been applied to the cleared region and *dislocation channeling* to the process. The current status of knowledge of the dislocation channeling process and its implications for the behavior of irradiated metals are reviewed in this report.

The possibility that such a process might occur in irradiated metals was pointed out by Cottrell (1) in 1958 and has since been observed in irradiated copper (2-4), molybdenum (5,6), iron (7,8), and niobium (9,10), as well as quenched aluminum (11) and gold (12). It is adequately established that this process will occur in any irradiated or quenched metal where defect aggregates are formed which can be destroyed or assimilated by moving dislocations. It is also well established that the crystallography of channeling is identical to that of slip and the channels correspond with surface slip traces. Less well understood and singled out as profitable areas for research are initiation of slip, mechanisms of dislocation-defect interaction, work-hardening processes within the channel, and correlation between channeling and macroscopic property changes.

CRYSTALLOGRAPHY OF CHANNELS

Among the important aspects of channeling which have been investigated is the crystallography of channels which has been carefully documented for copper by Sharp (4), for molybdenum by Brimhall (6), for niobium by Tucker et al (9), and for iron by Smidt and Mastel (8). (An example of the crystallographic relationships of slip on a {110} plane in a bcc metal of [$\bar{1}$49] tensile axis orientation is shown in Fig. 2a; the geometry of surface features is illustrated in Fig. 2b, and dislocation structure is illustrated in Fig. 2c.) In the case of copper, Sharp (4) showed that the cleared channels were parallel to the traces of the primary and cross-slip planes in copper, that is, {111} planes. Dislocations observed in channels were shown to have Burgers vectors of the a/2 ⟨101⟩ type by g·b = 0 experiments. Brimhall (6) investigated the morphology of the channels in irradiated molybdenum by analysis of the channel traces. He found channels parallel to {110} and {112} planes and commented that other traces of channels could be considered as combinations of these two. Tucker et al (10) investigated channeling in irradiated niobium and also concluded that the channels had formed on {110} and {112} planes and identified the Burgers vector of the slip dislocations as a/2⟨111⟩. In irradiated iron, Smidt and Mastel (8) showed that slip planes with densely packed dislocations were consistent with {110} and {112} planes and a/2⟨111⟩ Burgers vector. These results are extensive enough to establish that the channels in irradiated metals will develop on the slip plane normally active in the metal under investigation.

Fig. 1 - Dislocation channels in molybdenum irradiated to a fast fluence of 10^{19} n/cm^2 (>1 MeV) and deformed 1.5%; 22,000X. (Ref. 5.) Reprinted by permission of the American Institute of Physics and the authors.

CORRESPONDENCE OF CHANNELS WITH SURFACE SLIP TRACES

Another aspect of channeling which is well established is the correspondence between the channel and the surface slip trace. Brimhall (6) has demonstrated the correspondence between channeling and slip traces in irradiated molybdenum by examining molybdenum samples irradiated to 10^{19}n/cm^2 (>1 MeV) and deformed to 5% strain in four-point bending by both replica and thin-foil techniques. He found in general that the channels and slip bands were 4 μm wide and concluded that the general similarities in the spacing, width, crystal geometry, and general appearance of the channels and slip bands were

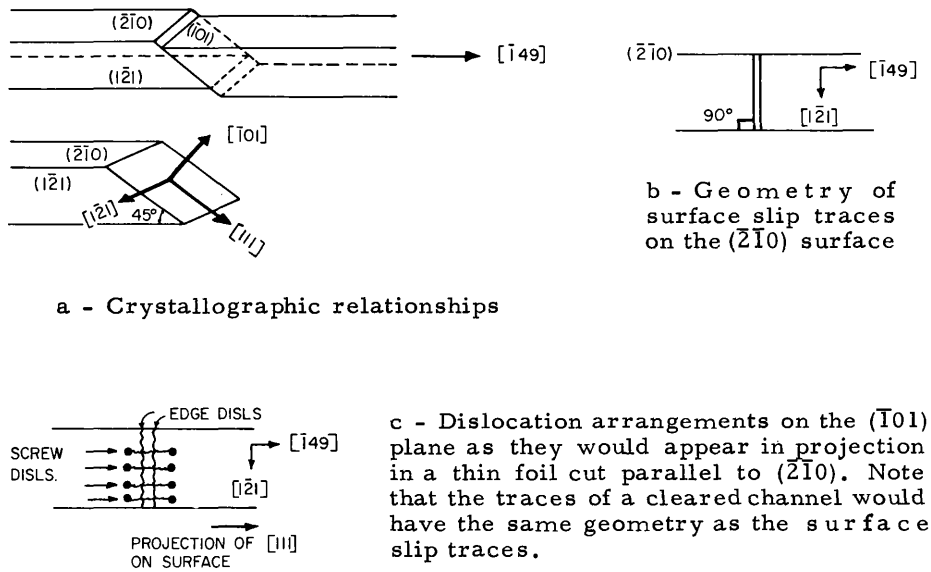

a - Crystallographic relationships

b - Geometry of surface slip traces on the $(\bar{2}\bar{1}0)$ surface

c - Dislocation arrangements on the $(\bar{1}01)$ plane as they would appear in projection in a thin foil cut parallel to $(\bar{2}\bar{1}0)$. Note that the traces of a cleared channel would have the same geometry as the surface slip traces.

Fig. 2 - An example of the geometry of slip on a {110} plane in a bcc metal with $[\bar{1}49]$ tensile axis and one face parallel to the $(1\bar{2}1)$ plane

evidence that the dislocation motion which produced the slip traces also was responsible for the channels. Sharp (4) has examined copper irradiated to 1×10^{18} n/cm^2 (>1 MeV) and quantitatively determined the width of slip traces and channels by replica and transmission electron microscopy techniques respectively. The quantitative measurements of the parameters of slip bands will be discussed in greater detail in the following section. In general, it can be said that a careful comparison of width, height, crystallography, and separation of the slip bands and channels agree very closely although not exactly and strongly indicate that in all metals studied the surface slip traces correspond to the cleared channels within the crystal.

CHANNEL DIMENSIONS

Sharp's analysis of the channel width and slip-band width showed that for crystals irradiated to 1×10^{18} n/cm^2 (>1 MeV) and deformed 4% at room temperature, channels ranging from 0.07 μm to 0.24 μm were observed with a median width of 0.15 μm. In comparison to this the width of slip bands determined from replicas was found to be slightly smaller at about 0.11 μm. Sharp discusses several possibilities for experimental error which might lead to this discrepancy. The spacing between slip bands was about 2.4 μm for 4% deformation. Measurements of the slip step height permit calculations of the total shear per slip band, and an analysis of this indicates that if the shear were homogeneous across the entire slip band or channel, approximately two to three dislocations would have traversed the channel on each slip plane. Sharp conducted additional experiments in which different strains and different deformation temperatures were used. The following trends were deduced from the experiments:

1. With decreasing deformation temperatures, the channel width and the step height decrease.

2. With increasing neutron fluence, the mean channel width decreases while the step height increases.

3. The effect of annealing the material before deformation is similar to a smaller neutron exposure, although short anneals have virtually no effect on the channel width.

4. The channel width is independent of the strain rates at room temperature for a change by a factor of 100.

5. For large strains (0.4 shear) into Stage II of the stress-strain curve, the channel width is about the same as for small strains, although the distance between channels decreases. The decrease is consistent with the increase in strain (factor of 2).

Tucker, Wechsler, and Ohr (10) examined niobium which had been irradiated to a fluence of 4.4×10^{18} (>1 MeV) and deformed 6.6% in strain at room temperature. In their observations they noted several instances where a channel intersected a recognizable feature in the specimen, such as another channel or a helix produced by climb of a screw dislocation through the absorption of vacancies. The channel widths were in general around 0.4 μm and the offset was around 0.6 μm. The resulting shear as calculated for each slip plane, assuming the shear to be homogeneous across the channel, approximates 1 to 3 dislocations passing per slip plane in agreement with Sharp's calculations for irradiated copper.

SOME GENERAL OBSERVATIONS OF CHANNELING

The entire sequence of channel formation consists of dislocation multiplication in the initial stages, softening as the defects are removed, and, finally work hardening as deformation within one channel discontinues and another channel in the vicinity is nucleated. In general, some other comments might be made about the appearance of the channeling. First, the channels are relatively straight with the sides of the channel being parallel. This is not to say that cross slip of the channel is not observed but does show that the direction is fairly well defined. Another significant observation is that no defects are observed within the channel once it has formed. Even annealing the copper after channeling, a treatment which should have produced agglomeration of "chopped up" defects into visible aggregates, did not reveal defect aggregates in the channels. Sharp (4) also notes that the edges of the channel are sharply delineated, i.e., the defects do not thin out near the edge of the channel. This would indicate that the greatest deformation was occurring near the center of the channel in contrast to near the edges. Dislocation tangles are frequently observed at the intersection of two channels, and occasionally some debris is noted along the sides of the channel.

AREAS REQUIRING MORE RESEARCH

There are a number of features of channeling which are not as yet fully understood. In the examination of these in the order encountered in the development of a channel, the first question is the mechanism by which channels are initiated. Next and of considerable importance is the mechanism of interaction between the dislocation and the defect which removes it from the slip plane. Perhaps of greatest importance is the work hardening mechanism which causes deformation in one channel to be terminated and a new channel to be initiated at increasingly closer spacings. Finally, there is the need to quantitatively relate the parameters of channeling to the macroscopic mechanical properties of irradiated metals.

Channel Initiation

Makin and Sharp (13) have given some consideration to the problem of slip-band initiation in irradiated materials. They have considered that for a single dislocation loop to expand, a stress given by

$$\sigma = \frac{\mu b}{2r} + \frac{\beta N^{1/2} \tau}{b} \tag{1}$$

is required to expand it. The first term being that due to the stress required to maintain a loop at radius r against the line tension, and the second term being the stress per unit length of dislocation line to move the line through the obstacles of strength , density per slip plane of N, and effective interaction factor β.

The obstacles are destroyed by the passage of dislocations so that subsequent loops are impeded by a fraction f of the original number N. A pile-up will form as more loops are produced by the source, and these exert a back stress of $n\mu b/2r$ on the source. By equating the expression for the net stress in the presence of a pile-up with the initial stress to expand the loop against obstacles, the authors obtained an expression for n in terms of r and by suitable approximations obtained σ_{exp}, the stress to expand a loop in the presence of obstacles as a function of r. Solutions of these equations with parameters typical of irradiated copper showed that the number of dislocations in a pile-up increased rapidly as soon as the first loop had expanded far enough to let a second loop nucleate and the stress to cause expansion approached $\beta N^{1/2} \tau/b$ asymptotically until the pile-up formed, and then dropped rapidly. These calculations indicate that once the stress to push a dislocation loop through the field of obstacles is exceeded, a pile-up rapidly forms and expands under a decreasing applied stress. Since the velocity of a dislocation is a very strong function of the overstress above that required to just initiate its motion, one would expect these dislocation pile-ups to move at very high velocities. This prediction was investigated by using a high-speed motion picture camera to observe the formation of slip lines on the surface of a polished copper crystal irradiated to 2.5×10^{18} n/cm^2 (>1 MeV). This experiment on slip-band formation at the head of the Lüders band showed that, even at the high speed of 3800 frames per second, a slip band was always fully formed between one frame and the next. These experiments confirm that slip bands indeed nucleate in a rapid fashion.

Another related question of interest is the nature of the dislocation sources in these irradiated crystals. It is generally observed that grown-in dislocations and dislocation networks under stress do not move in irradiated crystals, in contrast to their behavior in unirradiated crystals. Thus, in irradiated crystals under stress, there will be a very low density of sources and slip bands will tend to initiate at regions of stress concentration near the grip or in the region ahead of the Lüders band where a stress concentration is produced by lattice rotation. The sources in question are most likely to be segments of the dislocation network pinned at nodes but free to bow out along the slip plane under the influence of the applied stress. It is possible that other sources in the vicinity of the one initially activated may be cooperatively activated by the stress concentration produced near the original source and thus assist in the formation of the slip band.

Interaction with Loops

The next question of interest is the mechanism of interaction between the glide dislocation and the defect obstacles within the channels. Saada and Washburn (14) suggest a mechanism by which dislocation loops with the same Burgers vector as that of the glide dislocations may be removed. A portion of the prismatic loop becomes incorporated into the slip dislocation, and a smaller loop is left behind. Repetition of this process is required to reduce the loop to the point where it becomes unstable and disappears. This mechanism, however, cannot explain all the facts in channeling because, first of all, a random distribution of the prismatic loops among the possible configurations

indicates that the Saada and Washburn mechanism could only account for the removal of 1/6 to 1/3 of the loops in fcc metals. Likewise, annealing of material after channels have been produced by deformation has not revealed any defect aggregates within the cleared channel. Such aggregates should appear after annealing if the loops had been chopped up into smaller sections.

A long-range interaction between the glide dislocations and prismatic loops was discussed by Makin (15) to show that an elastic interaction could cause loops in several orientations to be cleared from the channel at distances up to 1000 Å from the dislocation glide plane. This mechanism, however, would suggest a higher density of defects along the edges of the channel and such a gradient in defect concentration has never been observed.

Tucker, Wechsler, and Ohr (10) suggested that the smaller loops might be annihilated by vacancies, at least in irradiated niobium where the defect produced during the irradiation has been identified as an interstitial loop. These vacancies might be produced by the nonconservative motion of jogs on the slip dislocation or might be a result of the irradiation. A high concentration of vacancies could annihilate the remnants of loops chopped up in the Saada-Washburn mechanism. The authors cite as evidence in support of this hypothesis a case where niobium was annealed at 600°C after deformation. Small vacancy-type loops were observed in the matrix but not in the channel. This evidence, however, could also be interpreted as support for removal of all defect aggregates from the channel by dislocation motion.

Another mechanism considered by Tucker et al is that the heat of plastic deformation might cause the defect aggregates to dissociate in the same manner that annealing at higher temperatures causes them to dissociate. An estimate of the heat generated during deformation gave some indication that this heat was sufficient to locally raise the temperature enough to cause dissociation. However, it should be noted that low-temperature experiments have been performed on irradiated copper (4) where a temperature rise of the extent necessary to cause defect annealing was not possible, but the defect aggregates were removed from the channel by the deformation.

Foreman and Sharp (16) have recently published details of a model which overcomes the loop orientation criticism of the Saada-Washburn mechanism. The dislocation is postulated to form junctions with loops inclined to the glide plane, as illustrated schematically in Fig. 3a. This junction then lengthens and the segment of dislocation crossing the loop is eliminated, Fig. 3b and c, thus providing the driving force for the reaction. The final step, Fig. 3d, is for the two halves of the loop to glide together until they are eliminated by mutual annihilation. This leaves a jog on the glide dislocation but is energetically feasible because of the elimination of another line segment of dislocation. This postulate appears to be feasible from computer calculations by Foreman (17) and a few observations are not inconsistent with this type of model, although the mechanism has not been experimentally verified. A detailed analysis of the mechanisms and the confirmation of junction formation would require relatively large loops for a convincing analysis, but such experiments should be feasible in material annealed to give large loops or irradiated at suitable temperatures.

Work Hardening in Channels

The understanding of the work-hardening mechanism which eventually causes termination of slip in a particular channel and activation of slip in a new channel is another factor essential to the interpretation of channeling behavior. The absence of work hardening would result in deformation to failure in the first channel activated, thus the process has an important effect on ductility.

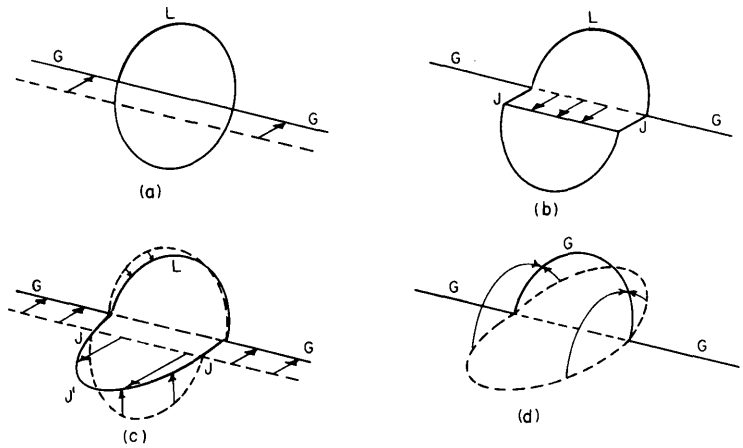

Fig. 3 - Mechanism of loop annihilation in fcc metals after Foreman and Sharp (16): (a) the glide dislocation G cuts into the loop L to form stable junctions J at the points of interaction (b). Glide of both parts of the loop causes the junctions to lengthen until they join at J′ in (c) to extend around half the loop. The two halves of the loop then glide together (d) along their glide cylinders due to mutual attraction and coalesce.

There appear to be two possible basic mechanisms which could produce the work hardening necessary to terminate slip on a particular channel—either the interaction with other channels (on intersecting slip planes) or interactions with dislocations in the same channel. The lower work-hardening rate in irradiated metals indicates, at the very least, that fewer interactions occur between interacting slip systems to form tangles and barriers to unimpeded easy glide. Sharp (4), for example, comments that the dislocation configurations observed in copper irradiated to a fluence of 1×10^{18} n/cm ^{2} (>1 MeV) and deformed were similar to those in unirradiated copper, and thus he concluded that the work-hardening mechanism must be essentially the same.

On the other hand, the reduced work-hardening rate is similar to the easy glide of Stage I deformation in single crystals where only one slip system is operative. Smidt and Mastel (8), showed that in contrast to the dense tangles and cell walls found in unirradiated iron deformed 5%, as in Fig. 4a, dislocation motion was confined to only a few planes in iron irradiated to a fluence of 8×10^{19} n/cm ^{2} (>1 MeV) and deformed the same amount, Fig. 4b. They took this as evidence that the work-hardening mechanism would be modified in the material showing channeling. Work hardening could result from elastic interaction of dislocations on the same or parallel planes if a barrier strong enough to form a pile-up could be found. The back stress from the pile-up would then stop the source from operating. The critical problem is the existence of such a barrier for unextended dislocations. Another possibility is that debris resulting from the accumulation of point defects in jogs on moving screw dislocations and the subsequent formation of loops and dipoles in the wake of the moving dislocation may provide the hardening mechanism.

Another question related to work hardening in the channel is the role of cross-slip in the deformation process. In general, one would expect a screw dislocation to cross-slip if the stress to move it on a cross-slip plane were less than that required to break through the obstacle. Once past the obstacle, the dislocation could then cross-slip back onto a plane parallel to the primary glide plane. However, if there were an activation energy for cross-slip to occur, the dislocation would continue to glide on the cross-slip

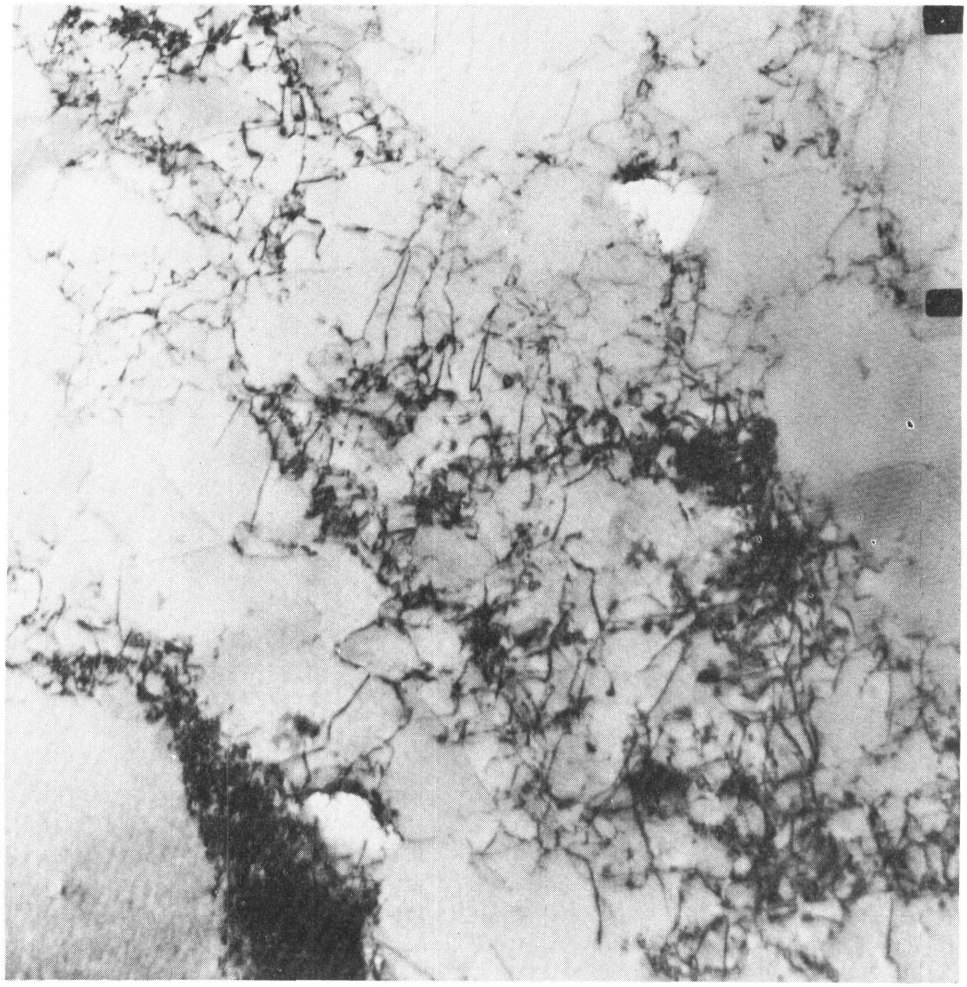

Fig. 4a - Dislocation structures in irradiated iron foil deformed 5% in tension. Note the dense tangles and cell walls typical of this stage of deformation. Orientation is near [111] . 46,000X. (Ref. 8.) Reprinted by permission of Taylor and Francis, Ltd., London.

plane until encountering the high stress fields at the channel wall. It therefore appears that the frequency and ease of cross slip could influence the width of the channels. Sharp (4) observed that narrower channels resulted from increasing difficulty in dislocation motion out of the glide plane, i.e., higher exposure or lower temperature. Another result supporting a relationship between channel width and ease of cross slip is the observation of Brimhall and Mastel (18) that cleared channels are not observed in an irradiated copper-8% aluminum alloy after 5% deformation. This material has a relatively low stacking fault energy which would make cross slip much more difficult.

Other factors have also been suggested which might influence the channel width. The climb of dislocations by absorption of point defects might be considered although as Sharp (4) pointed out, in copper which had received the highest fluence and hence had the greatest density of point defects, the channel width was observed to be the smallest. Sharp (4) suggested that in view of the rapidity of slip-band formation (13), a mechanism related to the geometry of the initial pile-up should be sought to explain the width of the channels. The strength of the barrier and the stress concentration developed in the

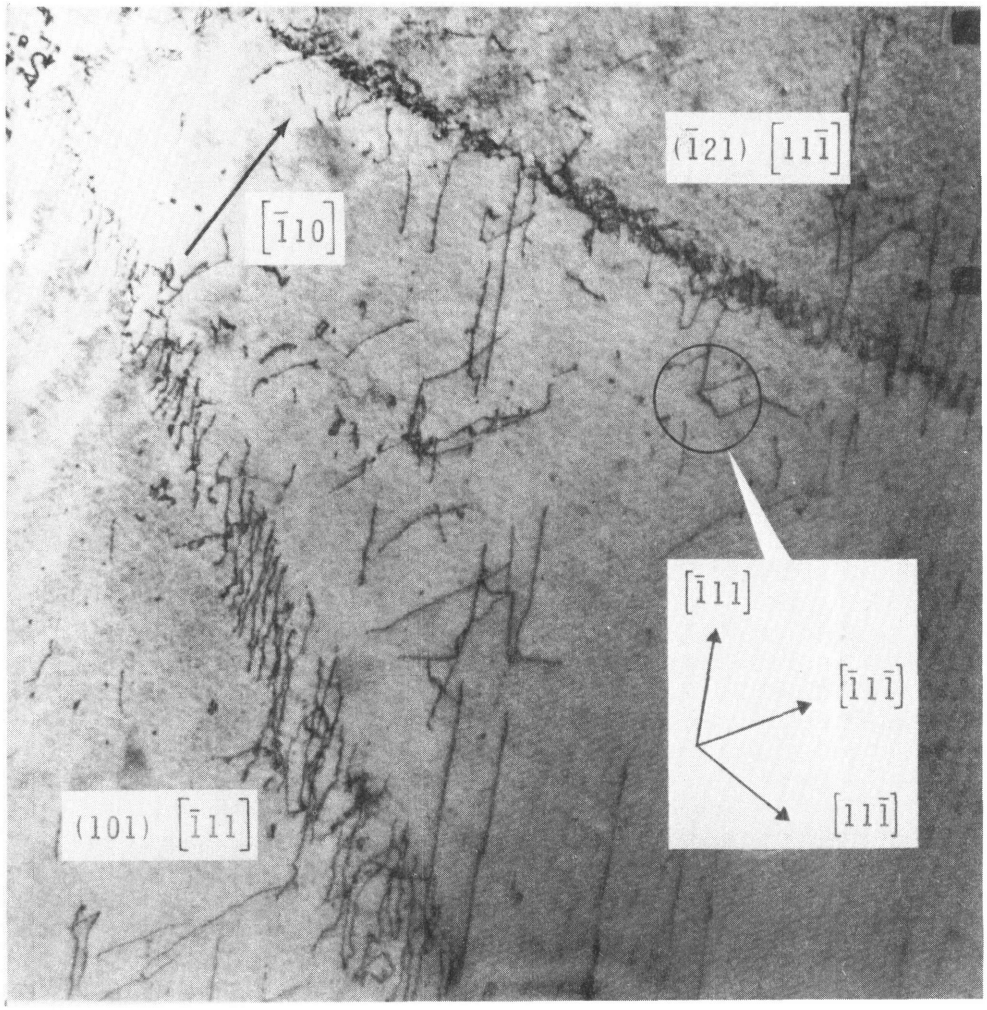

Fig. 4b - Dislocation structures in iron foil irradiated to a fast fluence of 8×10^{19} n/cm^2 (>1 MeV) and deformed 5% in tension. Note that dislocation motion is confined to several well defined slip systems. Orientation is near [111] . 46,000X (Ref. 8.) Reprinted by permission of Taylor and Francis, Ltd., London.

pile-up might then determine the width of the channel. These questions should be resolvable by simultaneous studies of the influence of deformation temperature, fluence, and strain on the channel width.

Influence of Channeling on Macroscopic Properties

Among the more prominent property changes that result from irradiation is the decrease in the strain-hardening coefficient and in ductility as illustrated in Fig. 5. The decrease in strain-hardening coefficient has been qualitatively rationalized (19) by noting that the less frequent interactions between active slip systems observed in irradiated metals reduce the dislocation interactions required for work hardening. Likewise, the loss in ductility can be rationalized in terms of channeling when the deformation is highly

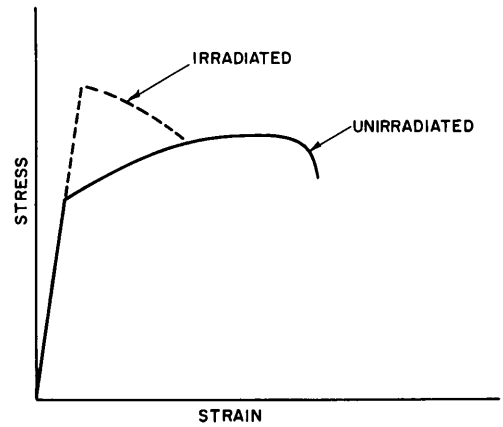

Fig. 5 - A schematic illustration of the change in tensile properties produced by neutron irradiation—the yield strength increases, the work-hardening coefficient decreases, and the ductility decreases

localized and may proceed to failure on a very few slip planes. The ductility on the few active planes is high, but in terms of uniform elongation or reduction in area it is quite limited. Similar concepts have been suggested by Stiegler and Weir (20).

These basic concepts of channeling can be further extended to explain other irradiation phenomena such as the drop in shelf energy in impact tests of irradiated steels (19). Energy absorption processes on the shelf region in fracture tests are, in general, related to the work hardening process so one would expect a decrease in work hardening as a result of channeling to reduce the shelf energy. One might further predict that the dislocation pile-ups moving at high velocities envisioned by Makin and Sharp (13) would produce high stress concentrations at barriers. The highly concentrated shear from such pile-ups would be very effective in opening cracks at grain boundaries as illustrated schematically in Fig. 6 or cracking brittle precipitates at grain boundaries. Since channeling results from the destruction of defects in the path of a moving dislocation, the introduction of impenetrable obstacles should prevent channeling and restore more homogeneous deformation (21). This conclusion appears to be verified by an observation (20) that 304 stainless steel in which carbide precipitation had occurred as a result of irradiation at 454°C has a tangled dislocation structure in contrast to the highly localized deformation in material where carbide had not precipitated.

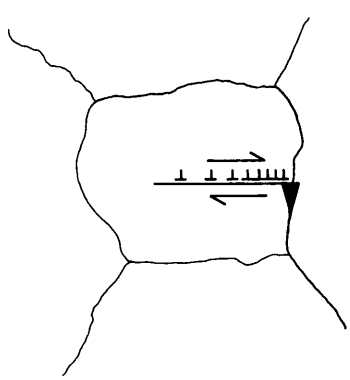

Fig. 6 - A schematic illustration of the opening of cracks at grain boundaries of irradiated metals due to the concentration of shear in the channels

The preceding discussion of macroscopic properties has been almost exclusively qualitative in nature. It is imperative that quantitative correlations of the microscopic channel parameters with the macroscopic mechanical properties be obtained to permit prediction of the behavior of irradiated metals.

CONCLUSIONS

Channeling has been observed in enough materials to establish it as a general feature of the deformation of irradiated metals in which defect aggregates have formed. Studies of the crystallography of channeling and correlation with surface slip traces show that the active slip systems are the same as those in unirradiated metals, but the shear is more localized with an average of 1 to 3 dislocations traversing each slip plane in the channel. Mechanisms of initiation of the channel, interaction with defect aggregates, work hardening within the channel and channel widening have not been conclusively resolved. Qualitative arguments show that channeling could influence the work-hardening coefficient, ductility, and impact energy absorption of metals, but little quantitative evidence of this exists.

The fundamental processes which are the basis for understanding channeling, namely localized slip, destruction of weak obstacles in the slip band, and work hardening of slip bands also occur in other deformation problems and thus transference of understanding would be expected. The study of cooperative dislocation movements, such as occur in the channel, is in an area intermediate between studies of individual dislocations and studies of macroscopic bulk properties. This intermediate region has generally been overlooked even though deformation is known to be distributed nonuniformly through a sample. There is a need then to develop a theory which integrates the localized behavior over the sample volume to yield a ductile material in some cases and a localized instability such as crack propagation in others. In some respects the channeling process represents a state of intermediate behavior.

REFERENCES

1. Cottrell, A.H., "Point Defects and the Mechanical Properties of Metals and Alloys at Low Temperatures," in "Vacancies and Other Point Defects in Metals and Alloys," London:The Institute of Metals, 1958, p. 1

2. Greenfield, I.G., and Wilsdorf, H.G.F., "Effect of Neutron Irradiation on the Plastic Deformation of Copper Single Crystals," J. Appl. Phys. 32:827-839 (1961)

3. Seeger, A., "Work Hardening of Metal Single Crystals, Slip Lines, and Transmission Electron Microscopy," in "The Relation Between the Structure and Mechanical Properties of Metals," London:Her Majesty's Stationery Office, 1963, p. 3

4. Sharp, J.V., "Deformation of Neutron-Irradiated Copper Single Crystals," Phil. Mag. 16:77 (1967)

5. Mastel, B., Kissinger, H.E., Laidler, J.J., and Bierlein, T.K., "Dislocation Channeling in Neutron-Irradiated Molybdenum," J. Appl. Phys. 34:3637 (1963)

6. Brimhall, J.L., "The Effect of Neutron Irradiation on Slip Lines in Molybdenum," Trans. Met. Soc. AIME 233:1737 (1965)

7. Eyre, B.L., and Bartlett, A.F., "An Electron Microscope Study of Neutron Irradiation Damage in Alpha-Iron," Phil. Mag. 12:261 (1965)

8. Smidt, F.A., Jr., and Mastel, B., "Some Observations of Dislocation Channelling in Irradiated Iron," Phil. Mag. 20:651 (1969)

9. Tucker, R.P., and Ohr, S.M., "Direct Observation of Neutron Irradiation Damage in Niobium," Phil. Mag. 16:643 (1967)

10. Tucker, R.P., Wechsler, M.S., and Ohr, S.M., "Dislocation Channeling in Neutron-Irradiated Niobium," J. Appl. Phys. 40:400 (1969)

11. Mori, T., and Meshii, M., "Plastic Deformation of Quench-Hardened Aluminum Single Crystals," Acta Met. 17:167 (1969)

12. Bapna, M.S., Mori, T., and Meshii, M., "The Observation of Slip Channels in Quenched Gold," Phil. Mag. 17:177 (1968)

13. Makin, M.J., and Sharp, J.V., "A Model of 'Lattice' Hardening in Irradiated Copper Crystals with the External Characteristics of 'Source' Hardening," Phys. Stat. Sol. 9:109 (1965)

14. Saada, G., and Washburn, J., "Interaction Between Prismatic and Glissile Dislocations," J. Phy. Soc. Japan, Suppl. 1, 18:43 (1963)

15. Makin, M.J., "The Long-range Forces between Dislocation Loops and Dislocations," Phil. Mag. 10:695 (1964)

16. Foreman, A.J.E., and Sharp, J.V., "A Mechanism for the Sweeping-up of Loops by Glide Dislocations During Deformation," Phil. Mag. 19:931 (1969)

17. Foreman, A.J.E., "Junction Reaction Hardening by Dislocation Loops," Phil. Mag. 17:353 (1968)

18. Brimhall, J.L., and Mastel, B., "Deformation Structure of Neutron-Irradiated Copper-Aluminum Alloy," Appl. Phys. Letters 9:127 (1966)

19. Smidt, F.A., Jr., "Dislocation-Substructure Interactions in Irradiated Iron and Steel," Battelle-Northwest Laboratory, BNWL-1045, June 1969

20. Stiegler, J.O., and Weir, J.R., Jr., "Effects of Irradiation on Ductility," in "Ductility," American Society of Metals, Metals Park, Ohio (1969)

21. Bement, A.L., Hoagland, R.G., and Smidt, F.A., Jr., "Fracture Mechanisms and Radiation Effects," in "Fracture, An Advanced Treatise, Vol. 3, Environmental Effects," H. Liebowitz, ed., New York:Academic Press (in preparation)

☆U.S. GOVERNMENT PRINTING OFFICE: 1970-397-177/188

Security Classification

DOCUMENT CONTROL DATA - R & D

(Security classification of title, body of abstract and indexing annotation must be entered when the overall report is classified)

1. ORIGINATING ACTIVITY *(Corporate author)* Naval Research Laboratory Washington, D.C. 20390	2a. REPORT SECURITY CLASSIFICATION Unclassified 2b. GROUP

3. REPORT TITLE

DISLOCATION CHANNELING IN IRRADIATED METALS

4. DESCRIPTIVE NOTES *(Type of report and inclusive dates)*

This is an initial report on this problem; work is continuing.

5. AUTHOR(S) *(First name, middle initial, last name)*

Smidt, Fred A., Jr.

6. REPORT DATE June 3, 1970	7a. TOTAL NO. OF PAGES 16	7b. NO. OF REFS 21
8a. CONTRACT OR GRANT NO. NRL Problem M01-22 b. PROJECT NO RR 007-11-41-5425 c. d.	9a. ORIGINATOR'S REPORT NUMBER(S) NRL Report 7078 9b. OTHER REPORT NO(S) *(Any other numbers that may be assigned this report)*	

10. DISTRIBUTION STATEMENT

This document has been approved for public release and sale; its distribution is unlimited.

11. SUPPLEMENTARY NOTES	12. SPONSORING MILITARY ACTIVITY Department of the Navy (Office of Naval Research), Washington, D.C. 20360

13. ABSTRACT

The present understanding of the phenomenon of dislocation channeling, or the removal of defect aggregates from the slip plane by glide dislocations in irradiated or quenched metals, is reviewed. Channeling is a general feature of any system where penetrable defect aggregates are removed by the glide dislocations. The crystallography of the channels and their correspondence with surface slip traces is shown to be well established.

It is shown that several areas of the problem require further research in order to gain an adequate understanding of the phenomenon. In particular the mechanism of initiation of the channels, the dislocation-defect interaction mechanism in which defects are annihilated or assimilated, and the mechanism of work hardening, which stops further deformation in a channel, require further study. In addition, a quantitative correlation between the microscopic parameters of channeling and the macroscopic properties of the work hardening coefficient and ductility is needed.

DD FORM 1 NOV 65 1473 (PAGE 1)

S/N 0101-807-6801

Security Classification

Security Classification

14. KEY WORDS	LINK A ROLE	LINK A WT	LINK B ROLE	LINK B WT	LINK C ROLE	LINK C WT
Radiation damage						
Defect structures						
Dislocations						
Electron microscopy						
Slip						
Deformation						

DD FORM 1 NOV 65 1473 (BACK)
(PAGE 2)

Security Classification