8-5

~~2620P1~~

DO NOT COPY
COPIES AVAILABLE
CODE 2627, B43,R14

NRL Report 8586

Properties of Even-Length Barker Codes and Specific Polyphase Codes with Barker Type Autocorrelation Functions

SHIMSHON GABBAY

Target Characteristics Branch
Radar Division

July 12, 1982

NAVAL RESEARCH LABORATORY
Washington, D.C.

Approved for public release; distribution unlimited.

SECURITY CLASSIFICATION OF THIS PAGE (When Data Entered)

REPORT DOCUMENTATION PAGE		READ INSTRUCTIONS BEFORE COMPLETING FORM
1. REPORT NUMBER NRL Report 8586	2. GOVT ACCESSION NO.	3. RECIPIENT'S CATALOG NUMBER
4. TITLE (and Subtitle) PROPERTIES OF EVEN-LENGTH BARKER CODES AND SPECIFIC POLYPHASE CODES WITH BARKER TYPE AUTOCORRELATION FUNCTION		5. TYPE OF REPORT & PERIOD COVERED Interim report on a continuing NRL problem. 6. PERFORMING ORG. REPORT NUMBER
7. AUTHOR(s) Shimshon Gabbay		8. CONTRACT OR GRANT NUMBER(s)
9. PERFORMING ORGANIZATION NAME AND ADDRESS Naval Research Laboratory Washington, DC 20375		10. PROGRAM ELEMENT, PROJECT, TASK AREA & WORK UNIT NUMBERS 62712N SF12-131-691 53-0605-0-2
11. CONTROLLING OFFICE NAME AND ADDRESS Naval Sea Systems Command Washington, DC 20362		12. REPORT DATE July 12, 1982 13. NUMBER OF PAGES 39
14. MONITORING AGENCY NAME & ADDRESS(if different from Controlling Office)		15. SECURITY CLASS. (of this report) UNCLASSIFIED 15a. DECLASSIFICATION/DOWNGRADING SCHEDULE

16. DISTRIBUTION STATEMENT (of this Report)

Approved for public release; distribution unlimited.

17. DISTRIBUTION STATEMENT (of the abstract entered in Block 20, if different from Report)

18. SUPPLEMENTARY NOTES

19. KEY WORDS (Continue on reverse side if necessary and identify by block number)

Barker codes
Polyphase codes
Autocorrelation function
Radar

20. ABSTRACT (Continue on reverse side if necessary and identify by block number)

Properties of even-length Barker codes, if they exist, are derived. The analysis leads to the analysis of polyphase codes. Similar properties are derived for specific types of polyphase codes, with Barker type autocorrelation functions.

The analysis is done in the time and frequency domains (including linear algebra and Z transform treatments), and suggests a procedure to search for codes with Barker type autocorrelation functions. The search problem is reduced by using the properties of such codes.

DD FORM 1 JAN 73 1473 EDITION OF 1 NOV 65 IS OBSOLETE
S/N 0102-014-6601

SECURITY CLASSIFICATION OF THIS PAGE (When Data Entered)

CONTENTS

INTRODUCTION 1

GENERAL ANALYSIS: SPECTRUM 2

BARKER CODE 7 3

BARKER CODE 4A 5

BARKER CODE 4B 6

SYNTHESIS ATTEMPT 7

Barker Code 8
G-Polphode 12

BARKER CODE STRUCTURE AND PROPERTIES 12

PHYSICAL INTERPRETATION FOR BARKER CODES 16

LINEAR ALGEBRA POINT OF VIEW 19

Z-TRANSFORM INTERPRETATION 28

FINAL COMMENTS 32

CONCLUSION 32

ACKNOWLEDGMENT 33

REFERENCES 33

APPENDIX — Further Properties of an Eigenvector G-Polphode 34

PROPERTIES OF EVEN-LENGTH BARKER CODES AND SPECIFIC POLYPHASE CODES WITH BARKER TYPE AUTOCORRELATION FUNCTION

INTRODUCTION

A Barker code is a sequence of N numbers x_i (where $x_i = \pm 1$), which has the following autocorrelation function:

$$R(K) = \sum_{i=1}^{N-K} x_i \, x_{i+k} = \begin{cases} N & \text{for } K = 0 \\ 0 \text{ or } \pm 1 & \text{for } K = 1, 2, \ldots, (N-1) \end{cases} \tag{1a}$$

i.e., the "time sidelobes" in the autocorrelation function do not exceed the level of 1.

In radar applications, the sequence modulates the phase of the signal (some constant carrier frequency) from code element to code element. For a stationary target the above property (1a) holds, but now, since the time variable is continuous, we get small triangles in the autocorrelation function whose peaks are 0 or ± 1, and a big triangle whose peak is N (the match point). For a moving target we actually have the crosscorrelation function of the transmitted code and the target return, resulting in higher sidelobes. Only the autocorrelation function will be considered here.

The known code lengths having the property of Eq. (1a) are 2, 3, 4, 5, 7, 11, 13 [1].

It has been shown that no Barker code of odd length exists for $N > 13$. Also, if an even-length Barker code exists, it must be a perfect square [2], i.e., $N = l^2$. Since N is even, l is also even.

The purpose here is to investigate the possibility of even-length Barker codes greater than the known of length 2 (+ + and − +) and 4 (+ + − + and + + + −). Possible candidates for this are, for example, lengths of 16, 36, 64, 100, etc., but is was verified [2] that up to $N = 6084$ ($l = 78$) no Barker code exists.

If x_i is not restricted to +1, −1, but can be any complex number whose magnitude is unity $|x_i| = 1$, then the autocorrelation function is required to fulfill:

$$R(K) = \sum_{i=1}^{N-K} x_i x^*_{i+k} = \begin{cases} N & \text{for } K = 0 \\ 0 \text{ or } \leqslant \text{ unity magnitude} & \\ \text{for } K = 1, 2, \ldots, N-1 & \end{cases} \tag{1b}$$

In general, $R(K)$ is a complex number. The complex conjugate is denoted by *.

DEFINITION (for convenience): A code with property (1b) is a *polphode*. It is actually a polyphase code with Barker type autocorrelation function (excluding the real Barker codes). Specific types of polphodes are the generalized Barker codes [3] which are derived from a "father" real Barker code. These will be discussed later.

Manuscript submitted February 9, 1982.

The following analysis will investigate the properties of even-length Barker codes and polphodes (where $N = l^2$, N and l are even), if they exist. The analysis of Barker codes (for which Turyn [2] considers evidence overwhelming that they do not exist) will lead to the analysis of the general case of polphodes.

GENERAL ANALYSIS: SPECTRUM

The general description of a phase-coded signal is shown in Fig. 1. We are interested in a constant amplitude code; thus, without loss of generality, we assume its amplitude is 1, and its carrier frequency is constant f_0.

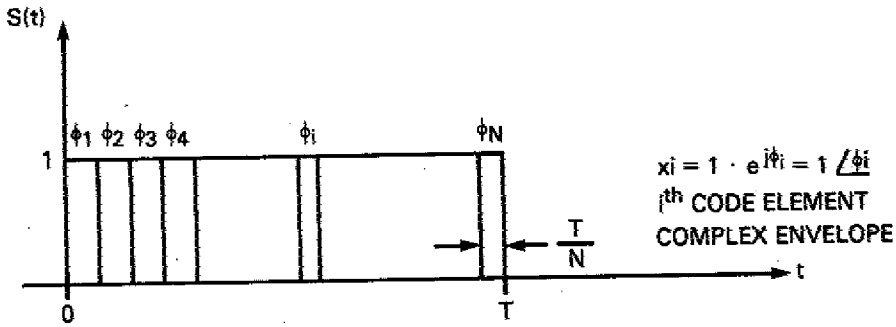

Fig. 1 — General description of a phase-coded signal

The signal duration T is divided into N code elements, each of T/N duration, and each code element has phase ϕ_i (for Barker codes ϕ_i can take only $0, \pi$ values corresponding to real x_i which equal $+1, -1$ in the sequence), where $i = 1, 2, \ldots, N$. For polphodes, ϕ_i can take any value resulting in a complex sequence x_i. We will specify the restrictions on ϕ_i whenever they apply.

Taking out the carrier frequency, the complex envelope of each code element is $1\underline{/\phi_i} = e^{j\phi_i}$. The analysis from now on will be carried out with the complex envelope.

The spectrum of the signal is

$$S(f) = \sum_{i=1}^{N} S_i(f), \tag{2}$$

where $S_i(f)$ is the spectrum of the ith code element:

$$S_i(f) = \int_{-\infty}^{\infty} S_i(t) e^{-j2\pi ft} dt = \int_{\frac{T}{N}(i-1)}^{\frac{T}{N}i} S_i(t) e^{-j2\pi ft} dt \tag{3}$$

$$S(f) = \int_0^{\frac{T}{N}} S_1(t) e^{-j2\pi ft} dt + \int_{\frac{T}{N}}^{2\frac{T}{N}} S_2(t) e^{-j2\pi ft} dt + \ldots + \int_{T-\frac{T}{N}}^{T} S_N(t) e^{-j2\pi ft} dt, \tag{4}$$

and after a change of variables in the integrals (in order to have the same limits in each one)

$$S(f) = \int_0^{\frac{T}{N}} e^{j\phi_1} e^{-j2\pi ft} dt + e^{-j2\pi f \frac{T}{N}} \int_0^{\frac{T}{N}} e^{j\phi_2} e^{-j2\pi ft} dt + e^{-j2\pi f \frac{2T}{N}} \int_0^{\frac{T}{N}} e^{j\phi_3} e^{-j2\pi ft} dt + \ldots, \tag{5}$$

$$S(f) = -\frac{1}{j2\pi f}\left\{e^{j\phi_1}\left(1 - e^{-j2\pi fT/N}\right) + e^{j\phi_2}\left(1 - e^{-j2\pi fT/N}\right)e^{-j2\pi fT/N}\right.$$

$$\left. + e^{j\phi_3}\left(1 - e^{-j2\pi fT/N}\right)e^{-j2\pi f2T/N} + \ldots\right\}, \tag{6}$$

$$S(f) = \frac{1 - e^{-j2\pi fT/N}}{-j2\pi f}\left\{e^{j\phi_1} + e^{j(\phi_2 - 2\pi fT/N)}\right.$$

$$\left. + e^{j(\phi_3 - 2\pi f2T/N)} + \ldots\right\} \tag{7}$$

$$S(f) = e^{-j2\pi fT/2N}\left(-\frac{1}{2}\,\frac{T}{N}\right)\frac{\sin\,(2\pi fT/2N)}{2\pi f \cdot T/2N}\left\{\begin{matrix}\text{Above } N\\ \text{Terms}\end{matrix}\right\}, \tag{8}$$

define

$$2\pi f \cdot \frac{T}{2N} = \psi \tag{9}$$

and ψ is a scaled frequency variable. Then,

$$S(f) = \left(\frac{-T}{2N}\right) e^{-j\psi}\frac{\sin\psi}{\psi}\left\{e^{j\phi_1} + e^{j(\phi_2 - 2\psi)}\right.$$

$$\left. + e^{j(\phi_3 - 4\psi)} + \ldots + e^{j[\phi_N - (N-1)2\psi]}\right\}. \tag{10}$$

This is the basic spectrum expression that we will utilize through the analysis. The $\sin\psi/\psi$ term in Eq. (10) is due the basic code element length T/N, and the terms in the right bracket are due to the phase coding inside the code.

If the signal bandwidth is B, and we sample it at the Nyquist rate, then $T/N = 1/B$ (this is because in general we use I and Q processing, which requires sampling at once, and not twice, the reciprocal of the bandwidth). In this case $\psi = \pi f/B$ and $(-1/2)\ T/N = -1/2B$. But we will proceed with the general analysis.

The power spectrum is

$$|S(f)|^2 = S(f)\ S^*(f), \tag{11}$$

and it is the Fourier transform of the autocorrelation function. Note that $|S(f)|^2$ is always a real function of f, and $R(\tau)$ is an even function of τ for real codes, while $R(\tau) = R^*(-\tau)$ for complex codes.

To see this relation in the discrete phase code, let us examine in detail Barker codes of lengths 7 and 4.

BARKER CODE 7

This code is known to be:

$$\begin{array}{cccccccc} & + & + & + & - & - & + & - \\ \phi_i & 0 & 0 & 0 & \pi & \pi & 0 & \pi \end{array}.$$

Notice here that changing the signs of *all* the code elements does not change the property of the autocorrelation function. This means that one can choose arbitrarily the sign of the first code element. This is true for any Barker code, and polphode, and we will choose the first code element to be $x_1 = +1$ (or equivalently $\phi_1 = 0^0$) from now on, unless otherwise stated.

The autocorrelation function is shown in Fig. 2 (where $\tau = K\frac{T}{N}$, $K = 0, 1, \ldots, N-1$).

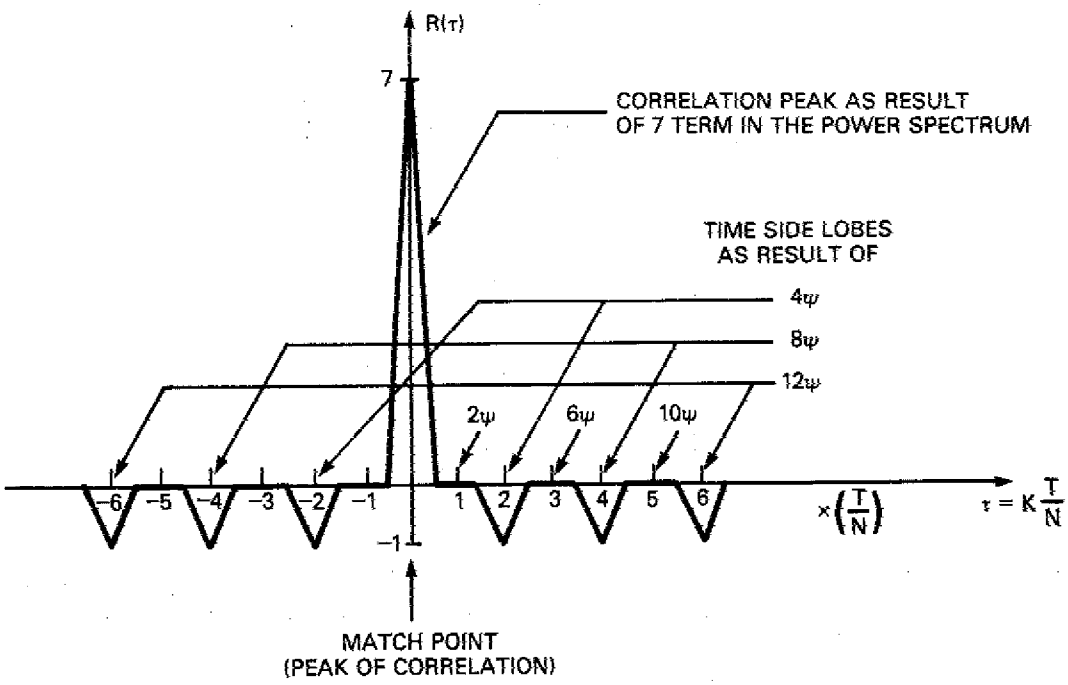

Fig. 2 — Autocorrelation function of Barker code 7

According to Eq. (10), substituting the known ϕ_i for this code we get:

$$S(f) = \left(-\frac{T}{2N}\right) e^{-j\psi} \frac{\sin\psi}{\psi} \left[1 + e^{-j2\psi} + e^{-j4\psi} - e^{-j6\psi} - e^{-j8\psi} + e^{-j10\psi} - e^{-j12\psi}\right], \tag{12a}$$

and

$$S^*(f) = \left(-\frac{T}{2N}\right) e^{j\psi} \frac{\sin\psi}{\psi} \left[1 + e^{j2\psi} + e^{j4\psi} - e^{j6\psi} - e^{j8\psi} + e^{j10\psi} - e^{j12\psi}\right]. \tag{12b}$$

Carrying out the multiplication of Eqs. (12a) and (12b), we get:

$$|S(f)|^2 = S(f)\, S^*(f) = \frac{T^2}{4N^2} \cdot \left(\frac{\sin\psi}{\psi}\right)^2 \cdot \left[7 - e^{-j4\psi} - e^{j4\psi} - e^{-j8\psi} - e^{j8\psi} - e^{-j12\psi} - e^{j12\psi}\right]$$

$$= \frac{T^2}{4N^2} \left(\frac{\sin\psi}{\psi}\right)^2 \left[7 - 2\cos 4\psi - 2\cos 8\psi - 2\cos 12\psi\right]. \tag{13}$$

We see in Eq. (13) the Fourier transform relation between $|S(f)|^2$ and the autocorrelation function; the 7 term in the square bracket of Eq. (13) gives the correlation peak. (The triangle, whose width is one code element T/N, is the result of the $\left(\frac{\sin\psi}{\psi}\right)^2$ term, as known by Fourier transform

theory.) The three sidelobes (on each side of the match point) are the result of the 2 cos 4ψ, 2 cos 8ψ, 2 cos 12ψ terms in Eq. (13), (for convenience, we will call these terms in $|S(f)|^2$ "pseudo-frequencies," though we should remember that they don't represent frequencies of the spectrum, since the spectrum is actually continuous); these "pseudo-frequencies" give impulses when transformed. When these impulses are convolved with the triangles due to $\left(\frac{\sin\psi}{\psi}\right)^2$, they give the triangle-shaped sidelobes on each side of the match point. Note that the amplitudes of the cosine terms in Eq. (13) are 2, but in the transform process each cosine appears as 2 impulses whose amplitudes are 1, so that the amplitudes of the sidelobes are 1 in this specific code. Note also that the *sign* of the "pseudo-frequencies" determines the sign of the sidelobe (in this example, all the sidelobes are negative).

Note also that for this example, the multiplication of $S(f)$ by $S^*(f)$ caused several $e^{-j2\psi n}$ terms of the spectrum to disappear; here the $e^{-j2\psi}$, $e^{-j6\psi}$ and $e^{-j10\psi}$ terms of the spectrum disappeared after the multiplication, resulting in zero level sidelobes at the corresponding locations of the autocorrelation function (see Fig. 2).

It is clear that the last term of the spectrum (generally $e^{-j(N-1)2\psi}$, and here $e^{-j12\psi}$) will never disappear after the multiplication (since no other term can cancel it), corresponding to the fact that the furthest sidelobe of such code is always +1 or −1.

Clearly, these observations will hold for any phase-coded signal with unity amplitude (e.g., polyphase codes like Frank codes), but to any sidelobe in the autocorrelation, say of g magnitude, there will be a corresponding $2g \cos(K \cdot 2\psi + \theta)$ "pseudo-frequency" in the power spectrum. Generally g can be bigger than 1 but for polphodes g is required to be smaller than 1 (θ is some angle that depends on the code).

To show this process for even-length codes, examine the Barker code of length 4. It is known that there are two possibilities which we designate as Barker Codes 4A and 4B.

BARKER CODE 4A

	+	+	+	−
ϕ_i	0	0	0	π.

The autocorrelation function is shown in Fig. 3:

$$S(f) = \left(-\frac{T}{2N}\right) e^{-j\psi} \left(\frac{\sin\psi}{\psi}\right) \left[1 + e^{-j2\psi} + e^{-j4\psi} - e^{-j6\psi}\right], \tag{14a}$$

$$S^*(f) = \left(-\frac{T}{2N}\right) e^{+j\psi} \left(\frac{\sin\psi}{\psi}\right) \left[1 + e^{j2\psi} + e^{j4\psi} - e^{j6\psi}\right], \tag{14b}$$

and

$$|S(f)|^2 = S(f)\, S^*(f) = \left(\frac{T^2}{4N^2}\right) \left(\frac{\sin\psi}{\psi}\right)^2 \left[4 + 2\cos 2\psi - 2\cos 6\psi\right]. \tag{15}$$

Again, the autocorrelation function corresponds to the "pseudo-frequencies" of the power spectrum in Eq. (15); the match point is 4, the first sidelobe is +1, the second sidelobe is −1, and the cos 4ψ term is missing, resulting in zero level at the corresponding point of Fig. 3 ($K = 2$).

Note that here, for an even length code, the *signs* of the "pseudo-frequencies" cos 2ψ, cos 6ψ are opposite, which results in opposite sign sidelobes in $R(\tau)$. This property is true for any even-length ($N = l^2$) Barker code [1], that means;

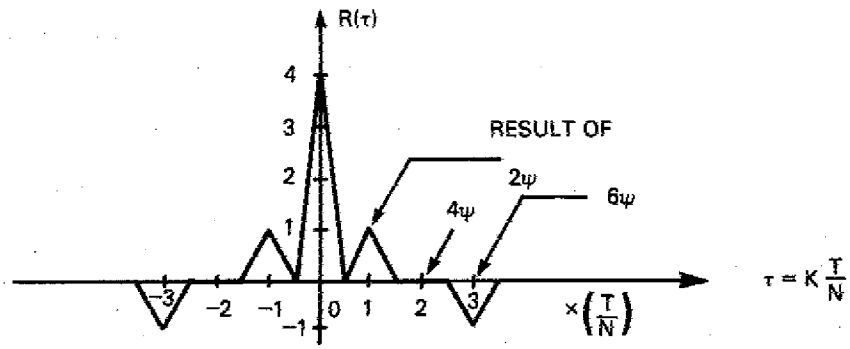

Fig. 3 — Autocorrelation function of Barker code 4A

$$R(K) + R(N - K) = 0 \tag{16}$$

for any $K = 1, 2, \ldots, N - 1$, or equivalently, in $|S(f)|^2$ we will have for any $\pm 2 \cos K2\psi$ term a corresponding $\mp 2 \cos (N - K)2\psi$ term, such that their signs are opposite. This also means that $R\left(K = \frac{N}{2}\right) = 0$ since the point $K = \frac{N}{2}$ does not have an "image." Figure 4 shows the image structure of $R(\tau)$. The point $K = 1$ is the "image" of $K = N - 1$, $K = 2$ is the "image" of $K = N - 2$, etc.

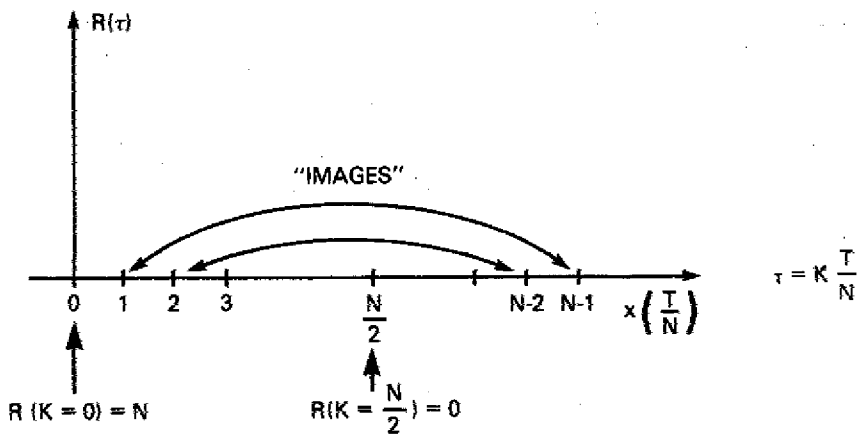

Fig. 4 — Image structure of the autocorrelation function of an even-length Barker code

BARKER CODE 4B

	+	+	−	+
ϕ_i:	0	0	π	0

$$S(f) = \left(-\frac{T}{2N}\right) \cdot e^{-j\psi} \left(\frac{\sin \psi}{\psi}\right) \left[1 + e^{-j2\psi} - e^{-j4\psi} + e^{-j6\psi}\right], \tag{17a}$$

$$S^*(f) = \left(-\frac{T}{2N}\right) e^{j\psi} \left(\frac{\sin \psi}{\psi}\right) \left[1 + e^{j2\psi} - e^{j4\psi} + e^{j6\psi}\right], \tag{17b}$$

and

$$|S(f)|^2 = \left(\frac{T^2}{4N^2}\right) \left(\frac{\sin \psi}{\psi}\right)^2 \left[4 - 2 \cos 2\psi + 2 \cos 6\psi\right]. \tag{18}$$

The correlation function is shown in Fig. 5. Figure 5 is "similar" to Fig. 3. But now in the power spectrum (Eq. (18)), the $2 \cos 2\psi$, $2 \cos 6\psi$ terms *both* have changed signs when compared to Eq. (15), so that Eq. (16) is fulfilled. This caused the sidelobes in Fig. 5 to change signs when compared to Fig. 3.

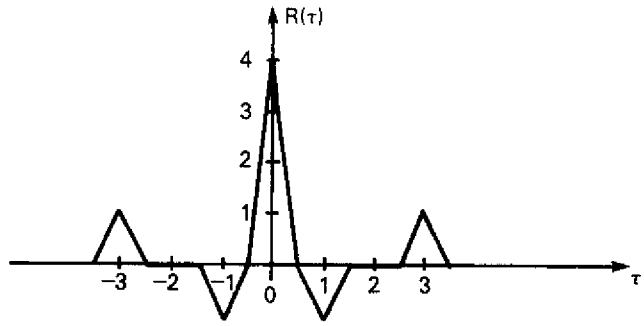

Fig. 5 — Autocorrelation function of Barker code 4B

Note that Eq. (16) does not hold generally for polphodes.

DEFINITION: Define a G-polphode as a polphode in which

$$R(K) + R^*(N - K) = 0. \tag{16a}$$

This is actually a generalization of Eq. (16). Notice that $R(K)$ can be a complex number in general.

As an example, examine the generalized Barker code 4 [3]:

$$\begin{array}{lcccc} & 1 & j & -1 & j \\ \phi_i: & 0 & \pi/2 & \pi & \pi/2 \end{array}$$

$$S(f) = \left(-\frac{T}{2N}\right) e^{-j\psi} \left(\frac{\sin \psi}{\psi}\right) \left[1 + je^{-j2\psi} - 1 \cdot e^{-j4\psi} + j \cdot e^{-j6\psi}\right], \tag{19a}$$

$$S^*(f) = \left(-\frac{T}{2N}\right) e^{j\psi} \left(\frac{\sin \psi}{\psi}\right) \left[1 - je^{j2\psi} - 1 \cdot e^{j4\psi} - je^{j6\psi}\right], \tag{19b}$$

and

$$|S(f)|^2 = \left(\frac{T^2}{4N^2}\right) \left(\frac{\sin \psi}{\psi}\right)^2 \left[4 + 2 \sin 2\psi + 2 \sin 6\psi\right], \tag{20}$$

corresponding to the values of the autocorrelation function:

$$R(K = 0) = 4, \; R(K = 1) = j, \quad R(K = 2) = 0, \; R(K = 3) = j.$$

We clearly see that Eq. (16a) is fulfilled, which means that the above code is a G-polphode.

SYNTHESIS ATTEMPT

With the above analysis we now try to synthesize the Barker type autocorrelation function for even-length ($N = l^2$) codes, Barker and G-polphode.

Barker Code

Suppose there exists an even-length Barker code $x_1, x_2, \ldots, x_N$. x_i is either $+1$ or -1.

The autocorrelation function of the code must be as illustrated in Fig. 6.

The match point $R(K = 0) = N$ appears. The nearest and furthest sidelobes must appear with magnitude 1 and opposite signs (corresponding to $\cos 2\psi$ and $\cos (N-1)\, 2\psi$ terms of the power spectrum). In Fig. 6 we plotted arbitrarily one of the two possibilities for these sidelobes. At the midpoint $R\left(K = \frac{N}{2}\right) = 0$ as explained before. The dotted sidelobes in the figure might or might not appear. But if one dotted sidelobe (say of index K) appears, there will be a corresponding "image" sidelobe (of index $N - K$) with the opposite sign, as required by Eq. (16). Of course, there will be another two sidelobes on the other side of the match point (negative τ).

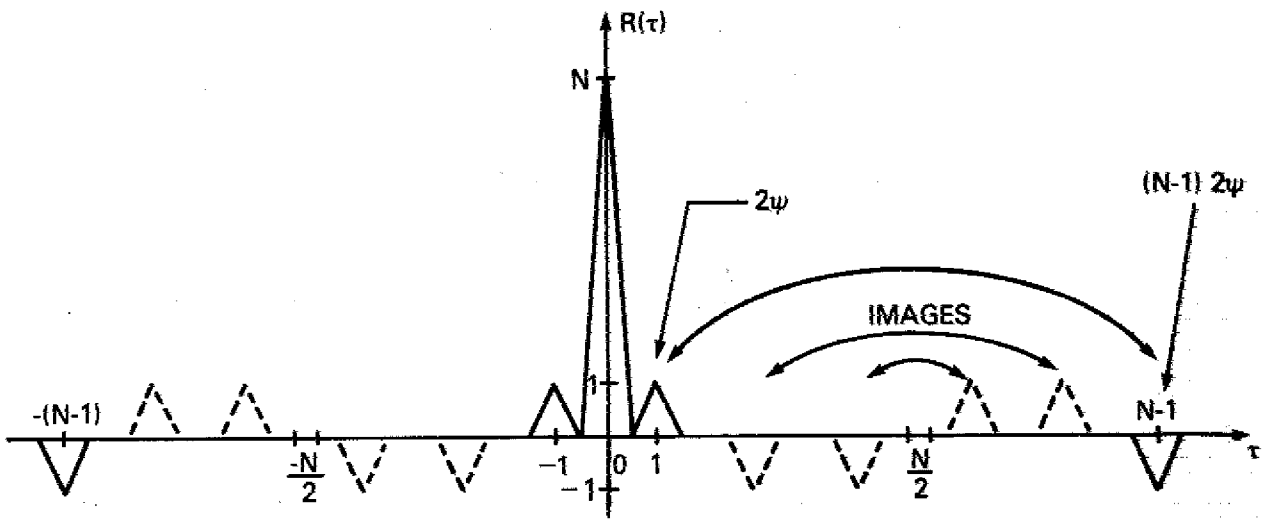

Fig. 6 — Autocorrelation function of even-length Barker codes (generally)

Now, from looking at the desired $R(\tau)$ in Fig. 6, we can determine the structure of the power spectrum:

$$|S(f)|^2 = \left(\frac{T^2}{4N^2}\right)\left(\frac{\sin\psi}{\psi}\right)^2 \cdot \tag{21}$$

$$\left\{N \pm 2\cos 2\psi \pm 2\cos 4\psi \pm \ldots + 0 \cdot 2\cos\frac{N}{2}\cdot 2\psi \pm \ldots \mp 2\cos(N-2)2\psi + 2\cos(N-1)2\psi\right\}.$$

must appear

The spectrum $S(f)$ of the code is given by Eq. (10). The *magnitude* of $S(f)$ must equal the square root of the power spectrum $|S(f)|^2$ at every point ψ (ψ was defined in Eq. (9) and represents the frequency variable). Specifically, at the N sampling points

$$\psi = 0,\ \psi = \pi/N,\ \psi = 2\pi/N,\ \ldots,\ \psi = i\pi/N,\ \ldots,\ \psi = (N-1)\pi/N$$

$$\left(f = 0,\ f = 1/T,\ f = 2/T,\ \ldots,\ f = i/T,\ \ldots,\ f = \frac{N-1}{T}\right)$$

we must have:

$$|S(f)|\Big|_{\psi = i\frac{\pi}{N}} = \sqrt{|S(f)|^2}\Big|_{\psi = i\frac{\pi}{N}} . \tag{22}$$

This is a *necessary* condition for the existence of even-length Barker codes, but might not be a sufficient condition. Actually, Eq. (22) gives us a set of N equations that must be fulfilled.

Note that in Eq. (21):

for $\psi = 0$

$$\begin{aligned} &\cos 2 \cdot 0 = \cos (N-1)\, 2 \cdot 0 \\ &\cos 4 \cdot 0 = \cos (N-2)\, 2 \cdot 0 \\ &\cos 6 \cdot 0 = \cos (N-3)\, 2 \cdot 0 \\ &\text{etc.} \end{aligned}$$

for $\psi = \pi/N$

$$\begin{aligned} &\cos 2 \cdot \pi/N = \cos (N-1)\, 2\pi/N \\ &\cos 4\, \pi/N = \cos (N-2)\, 2\pi/N \\ &\cos 6\, \pi/N = \cos (N-3)\, 2\pi/N \\ &\text{etc.} \end{aligned}$$

for $\psi = i\pi/N$

$$\begin{aligned} &\cos 2 \cdot i\pi/N = \cos (N-1)\, 2\, i\pi/N \\ &\cos 4\, i\pi/N = \cos (N-2)\, 2\, i\pi/N \\ &\cos 6\, i\pi/N = \cos (N-3)\, 2\, i\pi/N \\ &\text{etc.} \end{aligned}$$

or generally:

$$\cos K \cdot 2\, i\pi/N = \cos (N-K)\, 2 \cdot i\pi/N. \tag{23}$$

This means that the power spectrum at the N sampling points $\psi = i\pi/N$ $(i = 0, 1, \ldots, N-1)$, is (see Eqs. (16), (21)):

$$|S(f)|^2\Big|_{\psi = \frac{i\pi}{N}} = \left\{\frac{T^2}{4N^2}\right\}\left\{\frac{\sin\psi}{\psi}\right\}^2\Bigg|_{\psi = \frac{i\pi}{N}} \cdot \left\{N + 0 + 0 + \ldots + 0\right\} \tag{24}$$

i.e., the power spectrum samples at $\psi = i\pi/N$ $(i = 0, 1, \ldots, N-1)$ must be some constant $N \cdot \dfrac{T^2}{4N^2}$ times $(\sin\psi/\psi)^2\Big|_{\psi = \frac{i\pi}{N}}$ (the last term was interpreted as the contribution of the basic code element length T/N).

Now the spectrum in those N sampling points (see Eq. (10)) is:

$$S(f)\Big|_{\psi = \frac{i\pi}{N}} = \left\{-\frac{T}{2N}\right\}\left\{e^{-j\psi}\left(\frac{\sin\psi}{\psi}\right)\right\}\Bigg|_{\psi = \frac{i\pi}{N}} \cdot \Big[1 \cdot e^{j\phi_1} + e^{-j2\frac{i\pi}{N}} \cdot e^{j\phi_2}$$

$$+ e^{-j4\frac{i\pi}{N}}\, e^{j\phi_3} + \ldots + e^{-j(N-1)^{2\frac{i\pi}{N}}} \cdot e^{j\phi_N}\Big]. \tag{25}$$

Denote

$$e^{-j\frac{2\pi}{N}} = W \tag{26}$$

(this is the known basic phasor of DFT where $W^N = 1$).

$$S(f)\Big|_{\psi=\frac{i\pi}{N}} = \left[-\frac{T}{2N}\right]\left\{e^{-j\psi}\left[\frac{\sin\psi}{\psi}\right]\right\}\Bigg|_{\psi=\frac{i\pi}{N}} \cdot \left[1\cdot e^{j\phi_1} + W^1 e^{j\phi_2} + W^{2i} e^{j\phi_3} + \ldots + W^{(N-1)i}\, e^{j\phi_N}\right] \tag{27}$$

and requiring (22) results in N equations:

$$\underline{i=0:}\quad \left|1\cdot e^{j\phi_1} + 1\cdot e^{j\phi_2} + 1\cdot e^{j\phi_3} + \ldots + 1\cdot e^{j\phi_N}\right| = \sqrt{N} = l \tag{28.1}$$

$$\underline{i=1:}\quad \left|1\cdot e^{j\phi_1} + W\cdot e^{j\phi_2} + W^2\, e^{j\phi_3} + \ldots + W^{N-1}\, e^{j\phi_N}\right| = \sqrt{N} = l \tag{28.2}$$

$$\underline{i=2:}\quad \left|1\cdot e^{j\phi_1} + W^2\, e^{j\phi_2} + W^4\, e^{j\phi_3} + \ldots + W^{N-2}\, e^{j\phi_N}\right| = \sqrt{N} = l \tag{28.3}$$

.

.

.

$$\underline{i=N-1:}\quad \left|1\cdot e^{j\phi_1} + W^{N-1}\, e^{j\phi_2} + W^{N-2}\, e^{j\phi_3} + \ldots + We^{j\phi_N}\right| = \sqrt{N} = l \tag{28.N}$$

and in matrix notation:

$$\begin{bmatrix} 1 & 1 & 1 & \ldots & 1 \\ 1 & W & W^2 & \ldots & W^{N-1} \\ 1 & W^2 & W^4 & \ldots & W^{N-2} \\ \cdot & & & & \\ \cdot & & & & \\ \cdot & & & & \\ 1 & W^{N-1} & W^{N-2} & \ldots & W \end{bmatrix} \begin{bmatrix} e^{j\phi_1} \\ e^{j\phi_2} \\ e^{j\phi_3} \\ \cdot \\ \cdot \\ \cdot \\ e^{j\phi_N} \end{bmatrix} = \begin{bmatrix} l\underline{/\alpha_1} \\ l\underline{/\alpha_2} \\ l\underline{/\alpha_3} \\ \cdot \\ \cdot \\ \cdot \\ l\underline{/\alpha_N} \end{bmatrix}. \tag{29}$$

Going from Eq. (28) to Eq. (29), we had to take care of the absolute value in the left side of (28), by placing some unknown phases α_i in the right side of (29) for each element whose magnitude should be exactly $l = \sqrt{N}$.

We can write Eq. (29) as:

$$A\ \underline{X} = \underline{V} \tag{29a}$$

where A is the known DFT matrix ($N \times N$ matrix), which is nonsingular with $\det A \neq 0$.

The phasor W is on the unit circle (see Fig. 7).

$$\underline{X} = \begin{bmatrix} x_1 \\ x_2 \\ x_3 \\ \cdot \\ \cdot \\ \cdot \\ x_N \end{bmatrix} = \begin{bmatrix} e^{j\phi_1} \\ e^{j\phi_2} \\ e^{j\phi_3} \\ \cdot \\ \cdot \\ \cdot \\ e^{j\phi_N} \end{bmatrix}$$

is our unknown vector, which represents the required Barker code ($x_i = \pm 1$, ϕ_i is either 0 or π).

$$\underline{V} = \begin{bmatrix} l\underline{/\alpha_1} \\ l\underline{/\alpha_2} \\ l\underline{/\alpha_3} \\ \cdot \\ \cdot \\ \cdot \\ l\underline{/\alpha_N} \end{bmatrix} = \begin{bmatrix} V_1 \\ V_2 \\ V_3 \\ \cdot \\ \cdot \\ \cdot \\ V_N \end{bmatrix} \text{ is a vector whose}$$

elements have magnitude $l = \sqrt{N}$, with unknown phases α_i.

COMMENTS

(1) Equations (29) are *exact* necessary conditions.

(2) Equations (29) hold only for even-length codes $N = l^2$. A similar analysis for Barker codes 5, 7, 11, and 13 shows that the spectrum samples (of the sequence) are not required to have a constant magnitude.

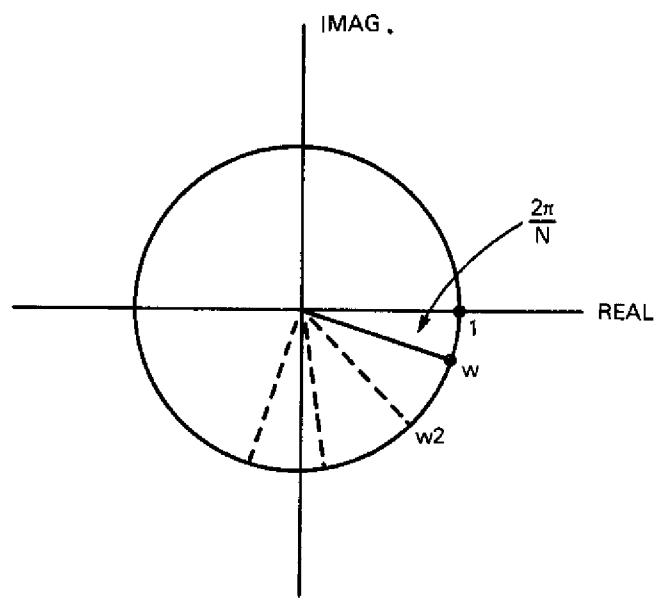

Fig. 7 — The basic DFT phasor W, on the unit circle

G-polphode

A similar analysis for the G-polphode, where Eq. (16a) is fulfilled, will give us the same result. For any time sidelobe $R(K)$ there will be a corresponding $R(N-K)$ time sidelobe such that,

$$R(K) + R^*(N-K) = 0$$

or equivalently: $\text{Real}\,[R(K)] + \text{Real}\,[R(N-K)] = 0$

$$I_m[R(K)] - I_m[R(N-K)] = 0.$$

This means that the pair of sidelobes $R(K)$ and $R(N-K)$ contribute to the power spectrum:

$$2\,\text{Real}\,[R(K)]\,\{\cos\ K \cdot 2\psi - \cos\,(N-K)2\psi\} + 2I_m[R(K)]\,\{\sin K \cdot 2\psi + \sin\,(N-K)2\psi\}.$$

This contribution of the pair goes to zero for the N sampling points $\psi = i\pi / N$, since

$$\left.\begin{aligned} \cos K \cdot 2\frac{i\pi}{N} &= \cos\,(N-K)\,2\,\frac{i\pi}{N} \\ \sin K \cdot 2\frac{i\pi}{N} &= -\sin\,(N-K)\,2\,\frac{i\pi}{N} \end{aligned}\right\} \tag{30}$$

thus resulting in

$$|\,S(f)|^2\Big|_{\psi=\frac{i\pi}{N}} = \frac{T^2}{4N^2}\left(\frac{\sin\psi}{\psi}\right)^2\Bigg|_{\psi=\frac{i\pi}{N}} \cdot \{N + 0 + 0 + 0 + \ldots + 0\}$$

as before.

So Eqs. (29) and (29a) hold also for G-polphodes, but the code elements can be any complex number with unity magnitude $|x_i| = 1$.

Thus, from now on we can proceed with a *a sequence of numbers* X_i (real for Barker and complex for G-polphode) which when DFT transformed (Eq. (29)), gives a vector with constant magnitude elements $l = \sqrt{N}$.

We will examine first Barker codes.

BARKER CODE STRUCTURE AND PROPERTIES

To derive several properties of an even-length Barker code (if it exists), we write the mapping Eq. (29) in a convenient form:

$$1 \cdot x_1 + 1 \cdot x_2 + 1 \cdot x_3 + 1 \cdot x_4 + \ldots + 1 \cdot x_N = l\underline{/\alpha_1} \tag{31.1}$$

$$1 \cdot x_1 + W \cdot x_2 + W^2 \cdot x_3 + W^3 \cdot x_4 + \ldots + W^{N-1} \cdot x_N = l\underline{/\alpha_2} \tag{31.2}$$

$$1 \cdot x_1 + W^2 \cdot x_2 + W^4 \cdot x_3 + W^6 \cdot x_4 + \ldots + W^{N-2} \cdot x_N = l\underline{/\alpha_3} \tag{31.3}$$

.

.

.

$$1 \cdot x_1 - 1 \cdot x_2 + 1 \cdot x_3 - 1 \cdot x_4 + \ldots - 1 \cdot x_N = l\underline{/\alpha_{N/2+1}} \tag{31.N/2+1}$$

.

.

.

$$1 \cdot x_1 + W^{N-2} \cdot x_2 + W^{N-4} \cdot x_3 + W^{N-6} \cdot x_4 + \ldots + W^2 \cdot x_N = l\underline{/\alpha_{N-1}} \tag{31.N-1}$$

$$1 \cdot x_1 + W^{N-1} \cdot x_2 + W^{N-2} \cdot x_3 + W^{N-3} \cdot x_4 + \ldots + W \cdot x_N = l\underline{/\alpha_N} \tag{31.N}$$

From Eq. (31.1): since x_i is real ($\pm$ 1), α_1 must be 0 or π, so that:

$$x_1 + x_2 + x_3 + \ldots + x_N = \pm l,$$

i.e.,

$$\text{number of pluses} - \text{number of minuses} = \pm l. \tag{32}$$

But since their sum is $N = l^2$; then:

CASE 1: if number of pluses $= \dfrac{l^2 + l}{2}$ then number of minuses $= \dfrac{l^2 - l}{2}$

(e.g., Barkers + + − + and + + + −)

CASE 2: if number of pluses $= \dfrac{l^2 - l}{2}$ then number of minuses $= \dfrac{l^2 + l}{2}$

(e.g., Barkers + − − − and − + − −)

For simplicity we'll discuss only Case 1 in the following few paragraphs (Case 2 is the "opposite" case).

Note that the difference between the number of pluses and minuses gets larger as the code length increases, which is not the case in PN binary sequences.

From Eq. (31.N/2+1): again $\alpha_{N/2+1}$ must be 0 or π, and :

$$x_1 - x_2 + x_3 - x_4 + \ldots + x_{N-1} - x_N = \pm l. \tag{33}$$

Odd pluses and even minuses contribute positive numbers in Eq. (33), while even pluses and odd minuses contribute negative numbers.

Denote:

$$m = \text{number of odd pluses, then} \frac{l^2 + l}{2} - m = \text{number of even pluses}$$

$$n = \text{number of odd minuses, then} \frac{l^2 - l}{2} - n = \text{number of even minuses}$$

From Eq. (33):

$$m + \left(\frac{l^2 - l}{2} - n\right) - \left[\left(\frac{l^2 + l}{2} - m\right) + n\right] = \pm l$$

$$2\,(m - n) - l = \pm l$$

We have two possibilities:

(A) $m = n$, but since $m + n = \frac{l^2}{2}$ (number of all the odd elements), we get:

$$\text{number of odd pluses} = \text{number of odd minuses} = \frac{l^2}{4} \tag{34.1}$$

(e.g., Barker + + − +)

(B) $m - n = l$, this implies similarly that:

$$\text{number of even pluses} = \text{number of even minuses} = \frac{l^2}{4} \tag{34.2}$$

(e.g., Barker + + + −)

From Eqs. (31.2) and (31.N): each weight of the real code elements ($x_i = \pm 1$) in Eq. (31.2) is the complex conjugate of the corresponding weight in (31.N), e.g., $W^* = W^{N-1}$, $(W^2)^* = W^{N-2}$, etc., so that $l\underline{/\alpha_2}$ must be the complex conjugate of $l\underline{/\alpha_N}$, or:

$$\alpha_N = -\alpha_2. \tag{35.1}$$

Similarly:

$$\alpha_{N-1} = -\alpha_3 \tag{35.2}$$

$$\alpha_{N-2} = -\alpha_4 \tag{35.3}$$

$$\vdots$$

$$\alpha_{N/2} + 2 = -\alpha_{N/2}. \tag{35.4}$$

These equations say that for real codes, Eqs. (29) take the form:

$$A \cdot \begin{bmatrix} x_1 \\ x_2 \\ \cdot \\ \cdot \\ \cdot \\ \cdot \\ \cdot \\ \cdot \\ \cdot \\ x_N \end{bmatrix} = \begin{bmatrix} l\underline{/0} \\ l\underline{/\alpha_2} \\ l\underline{/\alpha_3} \\ \cdot \\ l\underline{/0 \text{ or } \pi} \\ \cdot \\ \cdot \\ \cdot \\ l\underline{/-\alpha_3} \\ l\underline{/-\alpha_2} \end{bmatrix}. \tag{36}$$

From Eqs. (31.1) and (31.N/2+1): by adding and subtracting, we get (taking into account Eq. (36)):

$$2(x_1 + x_3 + x_5 + x_7 + \ldots + x_{N-1}) = \begin{matrix} 0 \\ \text{or} \\ l \end{matrix} \tag{37a}$$

$$2(x_2 + x_4 + x_6 + x_8 + \ldots + x_N) = \begin{matrix} l \\ \text{or} \\ 0 \end{matrix} \tag{37b}$$

which are another form of Eq. (34).

Further properties of Barker codes can be derived if one can follow the requirements logically. As an example, consider the $(N/4+1)$ which is a member of Eq. 31, and its conjugate. With property (36) in mind (note that these two equations give $\pm$ 90° shift in the weight from each code element to another), we get:

$$1 \cdot x_1 - jx_2 - x_3 + jx_4 + 1 \cdot x_5 - jx_6 - 1 \cdot x_7 + jx_8 + \ldots = l\underline{/\beta}\,, \tag{38.1}$$

and

$$1 \cdot x_1 + jx_2 = 1 \cdot x_3 - jx_4 + 1 \cdot x_5 + jx_6 - 1 \cdot x_2 - jx_8 + \ldots = l\underline{/-\beta}\,. \tag{38.2}$$

By adding and subtracting we get

$$2(x_1 - x_3 + x_5 - x_7 + x_9 - x_{11} + x_{13} - x_{15} + \ldots) = l\underline{/\beta} + l\underline{/-\beta}\,, \tag{39.1}$$

and

$$2j(-x_2 + x_4 - x_6 + x_8 - x_{10} + x_{12} - x_{14} + x_{16} - \ldots) = l\underline{/\beta} - l\underline{/-\beta}\,, \tag{39.2}$$

or

$$(x_1 - x_3 + x_5 - x_7 + \ldots) = l \cos\beta\,, \tag{40.1}$$

and

$$(-x_2 + x_4 - x_6 + x_i - \ldots) = l \sin\beta\,. \tag{40.2}$$

Equations (40) can be fulfilled simultanously for a few possibilities of the angle β, since their left side is an integer (with plus or minus sign). Actually, if $l \neq 5\rho$ (not multiple of 5), the only values for β are 0, $\pm$ 90°, $\pm$ 180°, which result in an integer on the right side of Eqs. (40.1) and (40.2). If $l = 5\rho$ (multiple of 5), there are other possibilities to get an integer in the right side, since $\cos\beta = 3/5$ *or* $\cos\beta = 4/5$ results in $\sin\beta = 4/5$ *or* $\sin\beta = 3/5$, which means we have another "family" of possibilities that can fulfill Eqs. (40). Actually, they are all the possible combinations of $\pm$ 3/5, $\pm$ 4/5 for the $\cos\beta$, $\sin\beta$,of Eqs. (40).

Another important observation is derived by adding all the equations of (31). Then in the left side, all the code elements, except x_1, will cancel (because the weights are uniformly distributed phasors in the unity circle of the complex plane), resulting in:

$$l^2 x_1 = l\underline{/\alpha_1} + l\underline{/\alpha_2} + l\underline{/\alpha_3} + \ldots + l\alpha_N\,,$$

and since we can assume $x_1 = 1$,

$$l^2 = l\underline{/0} + l\underline{/\alpha_2} + 1\underline{/\alpha_3} + \ldots + l\underline{/0 \text{ or } \pi} + \ldots + l\underline{/-\alpha_3} + l\underline{/-\alpha_2}\,, \tag{41}$$

which means that all the l^2 phasors in the right side of (31) or (36), whose magnitudes are l, and which appear in pairs of complex conjugates, must sum to l^2. This means also that one *possible* choice of the phasor's vector in the right side of (31) is the code itself $\underline{X}$ times l. In such a case, the right side of (31) is:

$$lx_1 + lx_2 + \ldots + lx_N = l(x_1 + x_2 + \ldots + x_N) = l \cdot l = l^2 \tag{42}$$

as required by (41).

All the above properties ((31) through (42)) can be utilized to reduce the search for even-length Barker codes.

PHYSICAL INTERPRETATION FOR BARKER CODES

We can examine now the physical meaning of Eq. (36), as illustrated in Fig. 8. We need to input the real code $x_i(\pm 1)$ to a DFT system, such that we get a constant amplitude l in the output, while the phases of the output must fulfill some constraints.

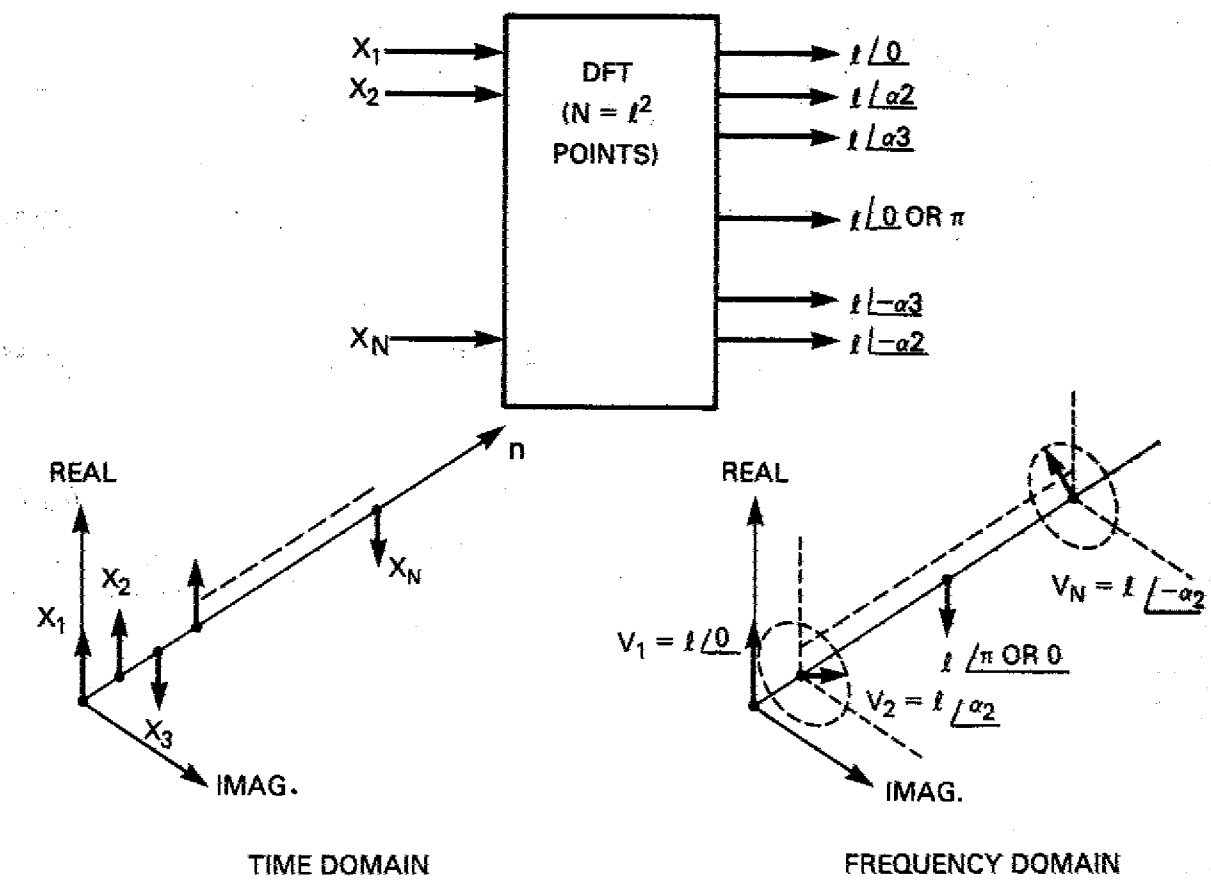

Fig. 8 — Physical meaning of Eq. (36): the DFT of the real sequence X_i gives constant magnitude phasors

Now we'll see how the Barker codes for $N = 4$ ($l = 2$) are derived by the above analysis (see Fig. 9).

$$W = e^{-j\,2\pi/N} = e^{-j\,2\pi/4} = -j$$

$$A = \begin{bmatrix} 1 & 1 & 1 & 1 \\ 1 & W & W^2 & W^3 \\ 1 & W^2 & W^4 & W^6 \\ 1 & W^3 & W^6 & W^9 \end{bmatrix} = \begin{bmatrix} 1 & 1 & 1 & 1 \\ 1 & -j & -1 & j \\ 1 & -1 & 1 & -1 \\ 1 & j & -1 & -j \end{bmatrix}.$$

We need:

$$A \cdot \begin{bmatrix} x_1 \\ x_2 \\ x_3 \\ x_4 \end{bmatrix} = \begin{bmatrix} 2\underline{/0} \\ 2\underline{/\alpha} \\ 2\underline{/\pi \text{ or } 0} \\ 2\underline{/-\alpha} \end{bmatrix}.$$

We see from Fig. 9 that C_1 only can create the dc-frequency term $2\underline{/0}$, C_2 only can create the fundamental frequency $2\underline{/\alpha}$, etc. Thus the required code C is a linear combination of C_1, C_2, C_3, C_4 (in the time domain). If we can find a code C all of whose elements are of unity magnitude, then it is the required code (note that C_3 has two possibilities).

C_1:		$1/2$	$1/2$	$1/2$	$1/2$
C_2:		$1/2\underline{/\alpha}$	$-j \cdot 1/2\underline{/\alpha}$	$-1 \cdot 1/2\underline{/\alpha}$	$+j \cdot 1/2\underline{/\alpha}$
C_3:	(A)	$1/2$	$-1/2$	$1/2$	$-1/2$
	(B)	$-1/2$	$1/2$	$-1/2$	$1/2$
C_4:		$1/2\underline{/-\alpha}$	$-j \cdot 1/2\underline{/-\alpha}$	$-1 \cdot 1/2\underline{/-\alpha}$	$+j \cdot 1/2\underline{/-\alpha}$
C:		X_1	X_2	X_3	X_4

We have only *one* parameter (α) to choose in order to have the required code, all of whose elements must have unity magnitude. We see that if C_3(A) is examined, α must be $+90°$ or $-90°$ (from the first column, in order to have $x_1 = 1$), so the code is:

$$C\colon\ x_1 = 1,\ x_2 = 1,\ x_3 = 1,\ x_4 = -1 \text{ for } \alpha = 90°$$

$$C\colon\ x_1 = 1,\ x_2 = -1,\ x_3 = 1,\ x_4 = 1 \text{ for } \alpha = -90°$$

and if C_3(B) is examined, α must be 0° or 180°:

$$C\colon\ x_1 = 1,\ x_2 = 1,\ x_3 = -1,\ x_4 = 1 \text{ for } \alpha = 0°$$

$$C\colon\ x_1 = -1,\ x_2 = 1,\ x_3 = 1,\ x_4 = 1 \text{ for } \alpha = 180°$$

All the above codes C are legitimate Baker codes which fulfill all the requirements. Here for $N = 4$, we had only parameter α to choose, but when N is large, we have many parameters to choose, such that all the elements in C will add up to unity.

A pictorial interpretation of the requirement established by (36) is illustrated in Fig. 10 (only for Barker codes) for three elements of the vector matrix described by that equation.

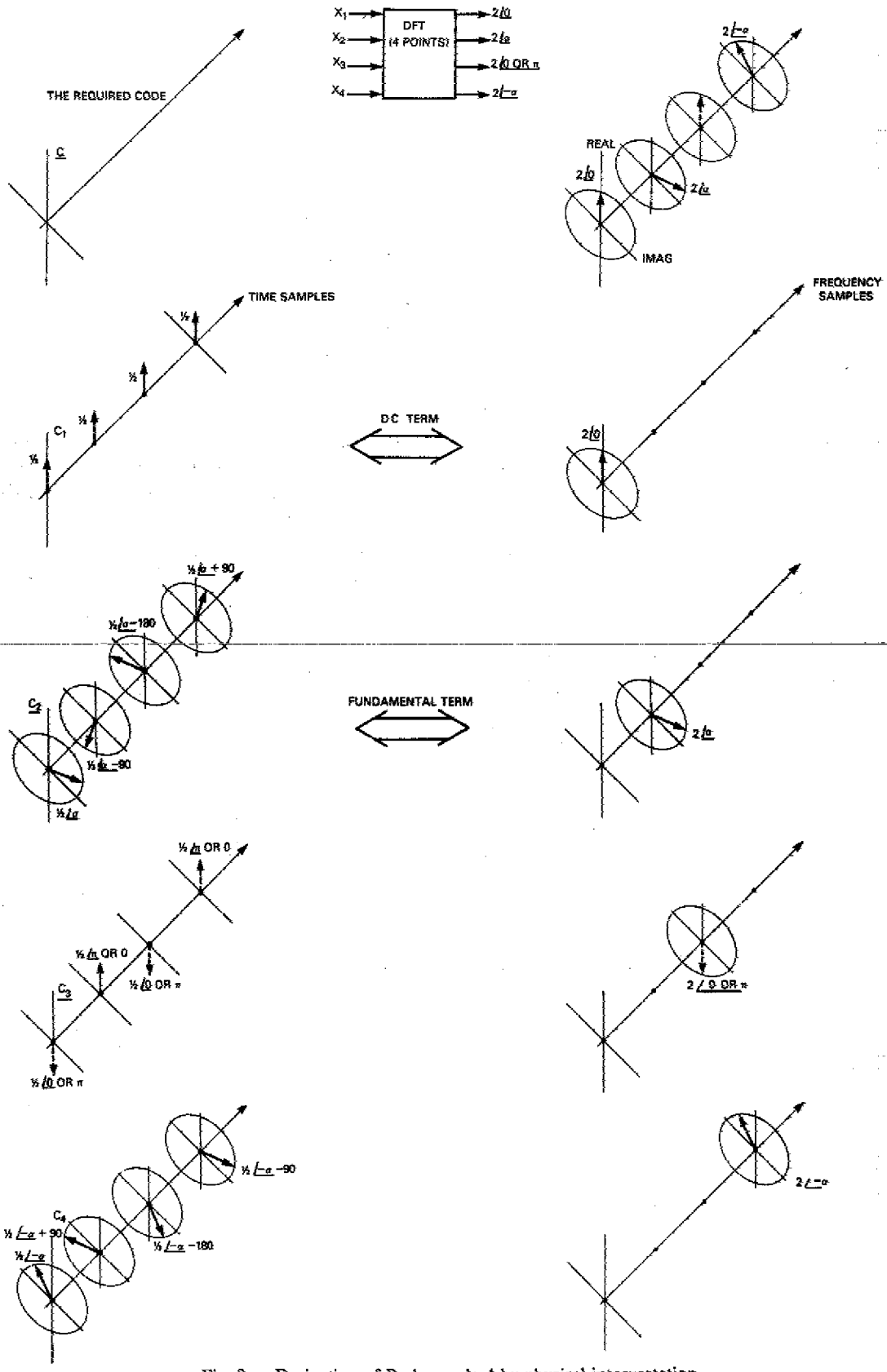

Fig. 9 — Derivation of Barker code 4 by physical interpretation

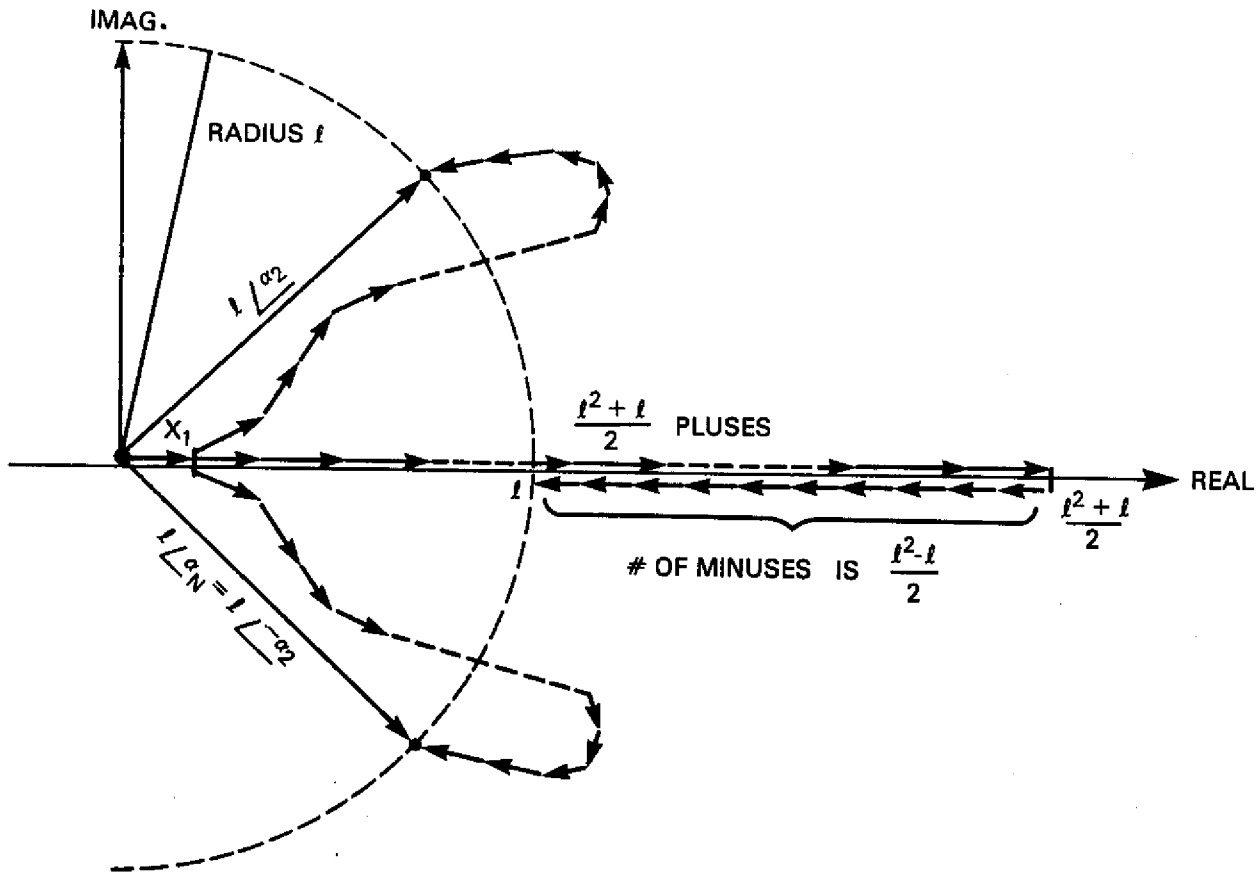

Fig. 10 — Pictorial interpretation of Eq. (36)

LINEAR ALGEBRA POINT OF VIEW

We now analyze our problem for either Barker codes or G-polphodes. Equation (29), which is a necessary condition for both of them, can be written as:

$$A\,\underline{X} = \begin{bmatrix} l\,\underline{/\alpha_1} \\ l\,\underline{/\alpha_2} \\ \cdot \\ \cdot \\ \cdot \\ 1\,\underline{/\alpha_N} \end{bmatrix} = l \begin{bmatrix} 1\,\underline{/\alpha_1} \\ 1\,\underline{/\alpha_2} \\ \cdot \\ \cdot \\ \cdot \\ 1\,\underline{/\alpha_N} \end{bmatrix}$$

or:

$$\frac{1}{l}\,A\,\underline{X} = \begin{bmatrix} 1\,\underline{/\alpha_1} \\ 1\,\underline{/\alpha_2} \\ \cdot \\ \cdot \\ \cdot \\ 1\,\underline{/\alpha_N} \end{bmatrix}.$$

Define:

$$B = \frac{1}{l} A \tag{43}$$

which is a modified DFT matrix (each element in A is divided by l in order to get B.

Then:

$$B\,\underline{X} = \underline{Y}, \tag{44}$$

where $\underline{Y}$ is the vector:

$$\underline{Y} = \begin{bmatrix} 1\,\underline{/\alpha_1} \\ 1\,\underline{/\alpha_2} \\ \cdot \\ \cdot \\ \cdot \\ 1\,\underline{/\alpha_N} \end{bmatrix} \tag{44a}$$

Equation (44) requires the code vector $\underline{X}$ to map to vector $\underline{Y}$ (unity magnitude elements) through the modified DFT matrix B.

This can happen in two ways:

1. The vector $\underline{Y}$ is some scalar λ (might be complex) times $\underline{X}$. Then:

$$B\underline{X} = \lambda \underline{X} \tag{45}$$

We will call this case an eigenvector mapping code (we have mentioned this possibility for Barker codes after (41))

2. $$\underline{Y} \neq \lambda\,\underline{X} \tag{46}$$

We will call this case a noneigenvector mapping code.

In order to investigate the eigenvector mapping case, we will use some properties of the matrix B (over the complex field).

Writing (44) in detail, we get:

$$\begin{bmatrix} \frac{1}{l} & \frac{1}{l} & \frac{1}{l} & \cdots & \frac{1}{l} \\ \frac{1}{l} & \frac{W}{l} & \frac{W^2}{l} & \cdots & \frac{W^{N-1}}{l} \\ \frac{1}{l} & \frac{W^2}{l} & \frac{W^4}{l} & \cdots & \frac{W^{N-2}}{l} \\ \cdot & & & & \\ \cdot & & & & \\ \cdot & & & & \\ \frac{1}{l} & \frac{W^{N-2}}{l} & \frac{W^{N-4}}{l} & \cdots & \frac{W^2}{l} \\ \frac{1}{l} & \frac{W^{N-1}}{l} & \frac{W^{N-2}}{l} & \cdots & \frac{W}{l} \end{bmatrix} \begin{bmatrix} x_1 \\ x_2 \\ x_3 \\ \cdot \\ \cdot \\ \cdot \\ x_{N-1} \\ x_N \end{bmatrix} = \begin{bmatrix} Y_1 \\ Y_2 \\ Y_3 \\ \cdot \\ \cdot \\ \cdot \\ Y_{N-1} \\ Y_N \end{bmatrix} \tag{47}$$

where $|x_i| = 1$, $|Y_i| = 1$ $i = 1, 2, \ldots, N$.

PROPERTIES OF B

a. The columns (or rows) of B are orthonormal:

$$(\underline{V}_i)^T (\underline{V}_j^*) = \begin{cases} 0 & i \neq j \\ 1 & i = j \end{cases} \tag{48}$$

where $\underline{V}_i$ denotes the ith column vector (note that this is the definition over the complex field, as a generalization of orthonormality over the real field).

b. B is symmetric:

$$B = B^T. \tag{49}$$

Also, its rows (except the first and $(N/2 + 1)^{\text{th}}$) are pairs of complex conjugates, e.g., the Nth row is the complex conjugate of the 2nd row, the $(N - 1)^{\text{th}}$ row is the complex conjugate of the 3rd row, etc.

c. B is a *unitary* matrix (this is the complex generalization of an orthogonal matrix over the real field, where A is an orthogonal matrix if $AA^T = I$), which is defined by:

$$B(B^*)^T = I, \tag{50}$$

or equivalently:

$$B^{-1} = (B^*)^T, \tag{50a}$$

and in our case, due to (49):

$$B^{-1} = B^* \tag{51}$$

From (47), (51):

$$\underline{X} = B^* \underline{Y}. \tag{52}$$

d. $|\det B| = 1$ (53)

for any unitary matrix (see [4], p. 112), which means that B is a nonsingular matrix of rank N.

e. All the N eigenvalues of B (as a unitary matrix) are of unity magnitude (see [4] p. 155, prob. 22);

$$|\lambda_i| = 1 \quad i = 1, 2, \ldots, N. \tag{54}$$

It can be verified that in our case, at least $\lambda_1 = 1$, $\lambda_2 = -1$ are eigenvalues of B, possibly with some multiplicity. To show this:

$$|B - \lambda I| = \begin{vmatrix} \frac{1}{l} - \lambda & \frac{1}{l} & \frac{1}{l} & \cdots & \frac{1}{l} \\ \frac{1}{l} & \frac{W}{l} - \lambda & \frac{W^2}{l} & \cdots & \\ \frac{1}{l} & \frac{W^2}{l} & \frac{W^4}{l} - \lambda & \cdots & \\ \cdot & & & & \\ \cdot & & & & \\ \cdot & & & & \\ \frac{1}{l} & \frac{W^{N-1}}{l} & \frac{W^{N-2}}{l} & \cdots & \frac{W}{l} - \lambda \end{vmatrix}. \tag{55}$$

Adding all the rows of (55) to the last row we get:

$$|B - \lambda I| = \begin{vmatrix} \frac{1}{l} - \lambda & \frac{1}{l} & \dots & \frac{1}{l} \\ \cdot & \cdot & & \\ \cdot & \cdot & & \\ \cdot & \cdot & & \\ l - \lambda & -\lambda & \dots & -\lambda \end{vmatrix}. \tag{56}$$

This last determinant is zero for $\lambda_1 = 1$ and $\lambda_2 = -1$ (since for both of them we get two proportional rows in the determinant).

f. B, as a unitary matrix, maps any vector $\underline{X}$ to vector $\underline{Y}$, such that their energies are the same (mathematicians call this property preservation of length) i.e.:

$$X_1 X_1^* + X_2 X_2^* + \dots + X_N X_N^* = Y_1 Y_1^* + Y_2 Y_2^* + \dots + Y_N Y_N^*. \tag{57}$$

Note, however, that if $|x_i| = 1$ (unity magnitude code) Y_i generally are not necessarily of unity magnitude. Our problem is to find that $|x_i| = 1$ that will map to $|Y_i| = 1$, and, of course, it is possible from an energy point of view.

As an example, check the case $l = 2$ $(N = 4)$:

$$B = \begin{bmatrix} \frac{1}{2} & \frac{1}{2} & \frac{1}{2} & \frac{1}{2} \\ \frac{1}{2} & \frac{-j}{2} & \frac{-1}{2} & \frac{j}{2} \\ \frac{1}{2} & -\frac{1}{2} & \frac{1}{2} & -\frac{1}{2} \\ \frac{1}{2} & \frac{j}{2} & \frac{-1}{2} & \frac{-j}{2} \end{bmatrix}$$

If the code is an eigenvector of B, then, $B\underline{X} = \lambda \underline{X}$.

The eigenvalues are, $\lambda_1 = +1$, $\lambda_2 = +1$, $\lambda_3 = -1$, $\lambda_4 = -j$

so that:

$$\det [B - \lambda I] = (\lambda - 1)(\lambda - 1)(\lambda + 1)(\lambda + j). \tag{58}$$

Note that indeed $|\lambda_i| = 1$ and $|\det B| = |j| = 1$ (when substituting $\lambda = 0$ in (58)).

The eigenvectors are:

1. for $\lambda_1 = \lambda_2 = 1$ we have two eigenvectors:

$$(B - I)\underline{V} = 0 \sim \begin{bmatrix} 0 & 0 & 0 & 0 \\ 0 & 0 & 0 & 0 \\ 1 & 0 & -1 & -2 \\ 0 & 1 & 0 & -1 \end{bmatrix} \underline{V} = \underline{0},$$

$$\underline{V}_1 = \begin{bmatrix} 1 \\ 1 \\ -1 \\ 1 \end{bmatrix} \text{ and } \underline{V}_2 = \begin{bmatrix} 1 \\ 0 \\ 1 \\ 0 \end{bmatrix};$$

$\underline{V}_1$ is a Barker code, while $\underline{V}_2$ is not. Actually, any linear combination of $\underline{V}_1$ and $\underline{V}2$ that has constant amplitude is also a good solution (in our case only $\underline{V}_1$ and $-\underline{V}_1$ are Barker codes).

2. for $\lambda_3 = -1$,

$$(B + I)\ \underline{V} = 0 \sim \begin{bmatrix} 0 & 0 & 0 & 0 \\ 2 & 1 & 0 & 1 \\ 1 & 0 & 1 & 0 \\ 1 & j & -1 & -j+2 \end{bmatrix} \underline{V} = \underline{0},$$

$$\underline{V}_3 = \begin{bmatrix} -1 \\ 1 \\ 1 \\ 1 \end{bmatrix};$$

$\underline{V}_3$ is the eigenvector Barker code (of course, $-\underline{V}_3$ is also a good solution).

3. for $\lambda_4 = -j$,

$$(B + jI)\ \underline{V} = 0 \sim \begin{bmatrix} 0 & 1 & 1 & 1 \\ 0 & 1 & 0 & 1 \\ 1 & 0 & 0 & 0 \\ 0 & 0 & 0 & 0 \end{bmatrix} \underline{V} = 0,$$

$$\underline{V}_4 = \begin{bmatrix} 0 \\ 1 \\ 0 \\ -1 \end{bmatrix}.$$

The eigenvector $\underline{V}_4$ is not a Barker code. Now we will prove that for the eigenvector mapping $B\underline{X} = \lambda\underline{X}$, only $\lambda = +1$, $\lambda = -1$ can give us a legitimate Barker code or G-polphode (where $|X_i| = 1$).

For an eigenvector mapping we require

$$\begin{bmatrix} \frac{1}{l} & \frac{1}{l} & \frac{1}{l} & \cdots \frac{1}{l} \\ \frac{1}{l} & \frac{W}{l} & \frac{W^2}{l} & \cdots \\ \frac{1}{l} & \frac{W^2}{l} & \frac{W^4}{l} & \cdots \\ \cdot & & & \cdots \\ \cdot & & & \\ \cdot & & & \\ \frac{1}{l} & \frac{W^{N-1}}{l} & \frac{W^{N-2}}{l} & \cdots \end{bmatrix} \cdot \begin{bmatrix} x_1 \\ x_2 \\ x_3 \\ \cdot \\ \cdot \\ \cdot \\ x_N \end{bmatrix} = \lambda \begin{bmatrix} x_1 \\ x_2 \\ x_3 \\ \cdot \\ \cdot \\ \cdot \\ x_N \end{bmatrix}. \tag{59}$$

From the first row:

$$\frac{1}{l}(x_1 + x_2 + \ldots + x_N) = \lambda x_1. \tag{60}$$

From summing all the Eqs. in (59) we get:

$$(\frac{1}{l}x_1 + \frac{1}{l}x_1 + \ldots + \frac{1}{l}x_1) + 0 \cdot x_2 + 0 \cdot x_3 + \ldots + 0 \cdot x_N = \lambda(x_1 + x_2 + \ldots + x_N). \tag{61}$$

From (60) and (61):

$$l^2 \cdot \frac{1}{l} x_1 = \lambda \cdot \lambda\ l x_1, \tag{62}$$

or

$$x_1 = \lambda^2 x_1. \tag{62a}$$

Equation (62a) can be fulfilled only if:

a. $x_1 = 0$, which will not give a Barker code or G-polphode (requires $|x_i| = 1$),

b. $\lambda^2 = 1$ or,

$$\lambda = \pm 1, \tag{63}$$

which might give a Barker code or a G-polphode.

Thus, an eigenvector code can be achieved only for the eigenvalues $\lambda = \pm 1$.

The other complex eigenvalues $|\lambda_i| = 1$ will not give a desired code (we saw it in the example for $l = 2$, where $\lambda_4 = -j$ did not give a Barker code, and, indeed, the first element of the eigenvector $\underline{V}_4$ was $x_1 = 0$).

Now we prove that an eigenvector mapping does not have a solution for a Barker code ($x_i = \pm 1$) for $l > 2$.

If $\underline{X} = (x_1, x_2, \ldots, x_N)^T$ is *real*, then the eigenvector possibilities are:

for $\lambda = 1$: $B\underline{X} = 1 \cdot \underline{X}$ and, (64a)

for $\lambda = -1$: $B\underline{X} = -1 \cdot \underline{X}$. (64b)

Before proceeding with the proof, it will help to observe the case $l = 2$.

a. $B\underline{X} = 1 \cdot \underline{X}$ gives the eigenvector Barker codes

$$\underline{V}_1 = (+\,+\,-\,+)^T$$
$$-\underline{V}_1 = (-\,-\,+\,-)^T.$$

b. $B\underline{X} = -1 \cdot \underline{X}$ gives the eigenvector Barker codes

$$\underline{V}_2 = (-\,+\,+\,+)^T$$
$$-\underline{V}_2 = (+\,-\,-\,-)^T.$$

But note that $\underline{V}_3 = (+\,-\,+\,+)^T$ and $-\underline{V}_3 = (-\,+\,-\,-)^T$ are not eigenvectors of B, though they are Barker codes, which are obviously "symmetrical" to the above $\underline{V}_1$ and $-\underline{V}_1$. For example,

$$B\,\underline{V}_3 = \begin{bmatrix} \frac{1}{2} & \frac{1}{2} & \frac{1}{2} & \frac{1}{2} \\ \frac{1}{2} & \frac{-j}{2} & -\frac{1}{2} & \frac{j}{2} \\ \frac{1}{2} & -\frac{1}{2} & \frac{1}{2} & -\frac{1}{2} \\ \frac{1}{2} & \frac{j}{2} & -\frac{1}{2} & \frac{-j}{2} \end{bmatrix} \cdot \begin{bmatrix} 1 \\ -1 \\ 1 \\ 1 \end{bmatrix} = \begin{bmatrix} 1 \\ j \\ 1 \\ -j \end{bmatrix};$$

$\underline{V}_3$ is not an eigenvector though it is a Barker code. Similarly, $\underline{V}_4 = (+++-)^T$ and $-\underline{V}_4 = (---+)^T$ (which are symmetrical to the above $\underline{V}_2$ and $-\underline{V}_2$) are Barker codes but not eigenvectors of B. This happens because of the general requirement that a real eigenvector must obey the following structure (for $\lambda = \pm 1$):

$$B \begin{bmatrix} x_1 \\ x_2 \\ x_3 \\ \cdot \\ \cdot \\ \cdot \\ x_{N-1} \\ x_N \end{bmatrix} = \lambda \begin{bmatrix} x_1 \\ x_2 \\ x_3 \\ \cdot \\ \cdot \\ \cdot \\ x^*_3 \\ x^*_2 \end{bmatrix}. \tag{65}$$

This was explained in Eq. (36) and Fig. 10, for a real code $\underline{X}$. But if x_i is real (± 1), then $x_i = x_1^*$, so that Eq. (65) requires:

$$\begin{aligned} x_N &= x_2^* = x_2, \\ x_{N-1} &= x_3^* = x_3, \\ x_{N-2} &= x_4^* = x_4, \quad \text{etc.} \end{aligned} \tag{66}$$

We see that $\underline{V}_1$, $-\underline{V}_1$, $\underline{V}_2$, $-\underline{V}_2$ above fulfill this requirement ($x_2 = x_4$), and therefore can be real eigenvectors. On the other hand, $\underline{V}_3$, $-\underline{V}_3$, $\underline{V}_4$, $-\underline{V}_4$ do not fulfill (66) (since $x_4 = -x_2$), and therefore cannot be eigenvectors.

Now to proceed with the proof, the next candidate for our problem is $l = 4$ ($N = 16$).

According to the above analysis, for the *real* eigenvector mapping, the code structure must fulfill Eq. (66). Thus, the eigenvector code must be:

CODE:	x_1	x_2	x_3	x_4	x_5	x_6	...	x_6	x_5	x_4	x_3	x_2
ELEMENT NO.	1	2	3	4	5	6	...	N-4	N-3	N-2	N-1	N

where x_i is either 1 or -1 (note that the above $\underline{V1}$, $-\underline{V1}$, $\underline{V2}$, $-\underline{V2}$, fulfill this structure).

To show that this is impossible for $l > 2$, we return to the time domain autocorrelation process by steps.

FIRST STEP

$$\begin{array}{cccccccc} \ldots x_5 & x_4 & x_3 & x_2 & & & & \\ & & & x_1 & x_2 & x_3 & \ldots & \end{array}$$

x_1, x_2 can be ± 1, so that $R(N-1) = \pm 1$.

SECOND STEP

$$\begin{array}{lllllll} \ldots x_5 & x_4 & x_3 & x_2 & & & \\ & & x_1 & x_2 & x_3 & x_4 & x_5 \ldots \end{array}$$

$$R(N-2) = x_2 \cdot x_2 + x_1 \cdot x_3 = 1 + x_1 \cdot x_3.$$

Since $R(K)$ is allowed to be 0 or ± 1, it follows that $x_3 = -x_1$

THIRD STEP

$$\begin{array}{lllllll} \ldots x_6 & x_5 & x_4 & -x_1 & x_2 & & \\ & & x_1 & x_2 & -x_1 & x_4 & x_5 \ldots \end{array}$$

$$R(N-3) = x_1 (x_4 - 2x_2) \text{ so that } x_4 = x_2.$$

FORTH STEP

$$\begin{array}{lllllll} \ldots x_6 & x_5 & x_2 & -x_1 & x_2 & & \\ & x_1 & x_2 & -x_1 & x_2 & x_5 \ldots & \end{array}$$

$$R(N-4) = x_2 \cdot x_2 + x_1 \cdot x_1 + x_2 \cdot x_2 + x_1 x_5 = 3 + x_1 \cdot x_5.$$

No x_1, x_5 *(which are ± 1)* can give the desired autocorrelation function (0 or ± 1), thus proving that no real eigenvector code exists for $l > 2$.

By now, we see that the remaining possibilities to meet:

$$\underline{BX} = \underline{Y} \tag{68}$$

$$|x_i| = 1, \ |Y_i| = 1$$

are:

1. Barker code (real), $x_i = \pm 1$:

$$B \begin{bmatrix} x_1 \\ x_2 \\ x_3 \\ \cdot \\ \cdot \\ \cdot \\ x_{N-1} \\ x_N \end{bmatrix} = \begin{bmatrix} Y_1 \\ Y_2 \\ Y_3 \\ \cdot \\ \cdot \\ \cdot \\ Y_3^* \\ Y_2^* \end{bmatrix}, \tag{68.1}$$

where $\underline{Y} \neq \lambda \, \underline{X}$ (not an eigenvector) for $l > 2$. This possibility has to meet properties (32) through (40).

2. G-polphode:

   a. $B \, \underline{X} = \pm 1 \cdot \underline{X}$ eigenvector mapping. (See the appendix for further properties in this case.) (68.2)

   b. noneigenvector mapping, $\underline{Y} \neq \lambda_i \, \underline{X}$.

As an example of possibility 2.b, consider the specific polphodes that are given by the generalized Barker codes [3]. These are derived from a "father" Barker code $\underline{X}_B$ by:

$$x_i = (x_i)_B \, e^{j(i-1)\theta}, \tag{69}$$

where θ is some angle $2\pi/P$ (P is an integer).

It is actually the addition to each element $(x_i)_B$, of a progressing phase step (θ can be further generalized). This modification does not change the envelope of the autocorrelation function.

Thus, all the codes defined by (69) form polphodes, some of them are G-polphodes.

Examples for $N = 4$:

1.

$$\underline{X}_B = \begin{bmatrix} 1 \\ 1 \\ 1 \\ -1 \end{bmatrix} \overset{\theta = 90^\circ}{\Longrightarrow} \underline{X} = \begin{bmatrix} 1 \\ j \\ -1 \\ j \end{bmatrix}$$

$$B\underline{X} = \begin{bmatrix} \frac{1}{2} & \frac{1}{2} & \frac{1}{2} & \frac{1}{2} \\ \frac{1}{2} & \frac{-j}{2} & \frac{-1}{2} & \frac{j}{2} \\ \frac{1}{2} & -\frac{1}{2} & \frac{1}{2} & -\frac{1}{2} \\ \frac{1}{2} & \frac{j}{2} & -\frac{1}{2} & \frac{-j}{2} \end{bmatrix} \begin{bmatrix} 1 \\ j \\ -1 \\ j \end{bmatrix} = \begin{bmatrix} j \\ 1 \\ -j \\ 1 \end{bmatrix}$$

We see that $\underline{X}$ is not an eigenvector, but it is a G-polphode since; $R(3) = j$, $R(1) = j$, as required by (16a).

2.

$$\underline{X}_B = \begin{bmatrix} 1 \\ 1 \\ -1 \\ 1 \end{bmatrix} \overset{\theta = 90^\circ}{\Longrightarrow} \underline{X} = \begin{bmatrix} 1 \\ j \\ 1 \\ -j \end{bmatrix}$$

$$B\underline{X} = B \begin{bmatrix} 1 \\ j \\ 1 \\ -j \end{bmatrix} = \begin{bmatrix} 1 \\ 1 \\ 1 \\ -1 \end{bmatrix}.$$

$\underline{X}$ is not an eigenvector, but it is a G-polphode since, $R(3) = j$, $R(1) = -j$.

3.

$$\underline{X}_B = \begin{bmatrix} 1 \\ 1 \\ 1 \\ -1 \end{bmatrix} \overset{\theta = 45^\circ}{\Longrightarrow} \underline{X} = \begin{bmatrix} 1 \\ 1 \angle 45^\circ \\ 1 \angle 90^\circ \\ 1 \angle -45^\circ \end{bmatrix}$$

$$B\underline{X} = \begin{bmatrix} \frac{1}{2} & \frac{1}{2} & \frac{1}{2} & \frac{1}{2} \\ \frac{1}{2} & \frac{-j}{2} & \frac{-1}{2} & \frac{j}{2} \\ \frac{1}{2} & -\frac{1}{2} & \frac{1}{2} & -\frac{1}{2} \\ \frac{1}{2} & \frac{j}{2} & -\frac{1}{2} & \frac{-j}{2} \end{bmatrix} \begin{bmatrix} 1 \\ 1 \angle 45^\circ \\ 1 \angle 90^\circ \\ 1 \angle -45^\circ \end{bmatrix} = \begin{bmatrix} \frac{1}{2} + \frac{1}{2} j + \cos 45^\circ \\ \frac{1}{2} - \frac{1}{2} j + \sin 45^\circ \\ \frac{1}{2} + \frac{1}{2} j - \cos 45^\circ \\ \frac{1}{2} - \frac{1}{2} j - \sin 45^\circ \end{bmatrix}. \tag{70}$$

$\underline{X}$ is a polphode, but not a G-polphode since the autocorrelation funtion is, $R(0) = 4$, $R(1) = 1\,\underline{/45°}$, $R(2) = 0$, $R(3) = 1\,\underline{/-45°}$, and $R(1) + R^*(3) \neq 0$, in contrast to Eq. (16a). Note also that the right side of Eq. (70) does not have constant amplitude elements. This last example shows that there might be polphodes that are not G-polphodes, thus our analysis does not cover them.

At this point, we review our results as shown in Fig. 11. A question mark denotes codes that were not investigated in this paper.

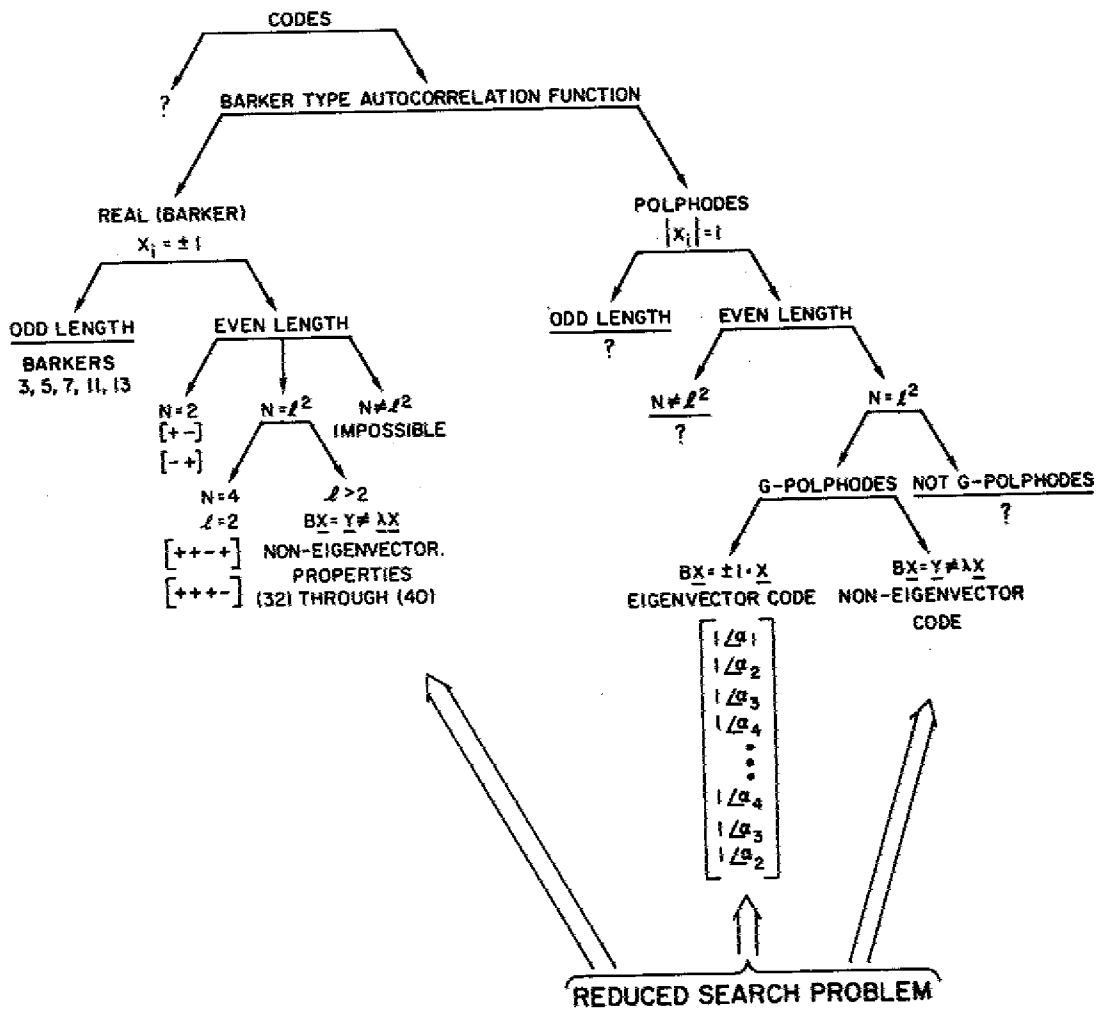

Fig. 11 — Review of results; a question mark denotes codes that were not investigated in the paper

Z-TRANSFORM INTERPRETATION

Further insight into the problem of generating a code is achieved by using the Z-transform. Basically, we need a sequence $x_i(|x_i| = 1,\ i = 1, 2, \ldots, N$, where $N = l^2)$ such that its DFT will have constant magnitude.

The DFT of a sequence is given by N sampling points of the Z-transform. The sampling points are uniformly distributed on the unity circle of the Z-plane (see Fig. 12).

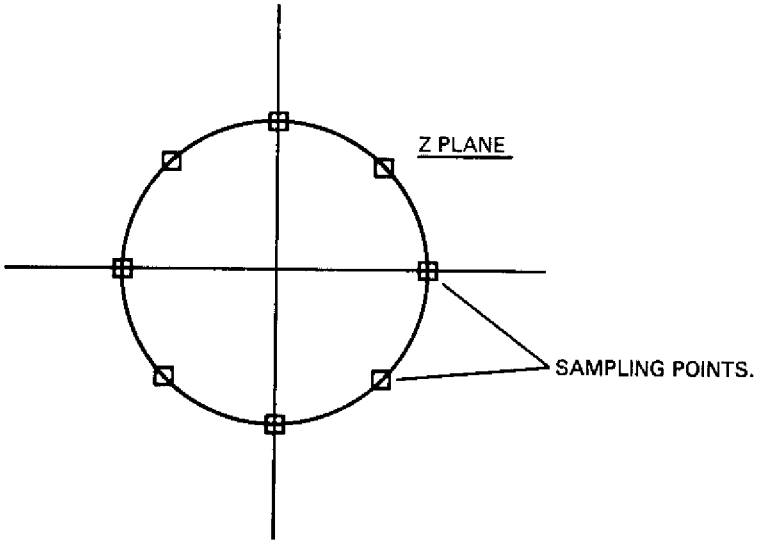

Fig. 12 — The DFT of a sequence is given by N sampling points (uniformly distributed on the unity circle) of the Z-transform

The Z-transform of the sequence $x_1, x_2, \ldots, x_N$ is:

$$X(Z) = x_1 + x_2 Z^{-1} + x_3 Z^{-2} + \ldots + x_N Z^{-(N-1)} = \frac{x_1 Z^{N-1} + x_2 Z^{N-2} + x_3 Z^{N-3} + \ldots + x_{N-1} Z + x_N}{Z^{N-1}}. \tag{71}$$

Then:

$$[DFT \text{ of } x_i] = X(Z)\Big|_{Z = W^K} = X(K) \tag{72}$$

where $W = e^{-j2\pi/N}$, $K = 0, 1, \ldots, N-1$.

We see in (71), that $X(Z)$ has $N-1$ poles at the origin ($Z = 0$), and $N-1$ zeroes that depend on the sequence x_i.

If the x_i's are real (± 1), the roots of the polynomial in (71) are either real or complex conjugates in pairs.

Since N is even, $N-1$ is odd, so that out of the $N-1$ zeroes of $X(Z)$ there will be an even number of complex conjugate zeroes and an odd number of real zeroes.

Thus $X(Z)$ for a real sequence x_i can be factored to the form:

$$X(Z) = \frac{1}{N^{N-1}} \underbrace{(Z - Z_1)(Z - Z_2)(Z - Z_3)}_{\text{odd number of real zeroes}} \ldots \underbrace{(Z - Z_4)(Z - Z_4^* \ldots (Z - Z_5)(Z - Z_5^*)}_{\text{pairs of complex conjugate zeroes}} \tag{73}$$

Since we are interested in the magnitude of the DFT of the sequence at $Z = W^K = e^{-j2\pi K/N}$ where $K = 0, \ldots, N-1$, we can ignore the $(N-1)$ poles at the origin (they do not affect the *magnitude* of $X(K)$).

As an example, examine a Barker code of length 4:

$$x_1 = 1 \quad x_2 = 1 \quad x_3 = -1 \quad x_4 = 1$$

$$X(Z) = 1 + Z^{-1} - Z^{-2} + Z^{-3} = \frac{Z^3 + Z^2 - Z + 1}{Z^3} = \frac{(Z - Z_1)(Z - Z_2)(Z - Z_3)}{Z^3}. \tag{74}$$

Carrying out the factorization we get:

$$Z_1 \simeq -1.84, \; Z_2 \simeq 0.42 + j0.6, \; Z_3 \simeq 0.42 - j0.6 = Z_2^*.$$

Those values are calculated approximately for the sake of illustration (see Fig. 13).

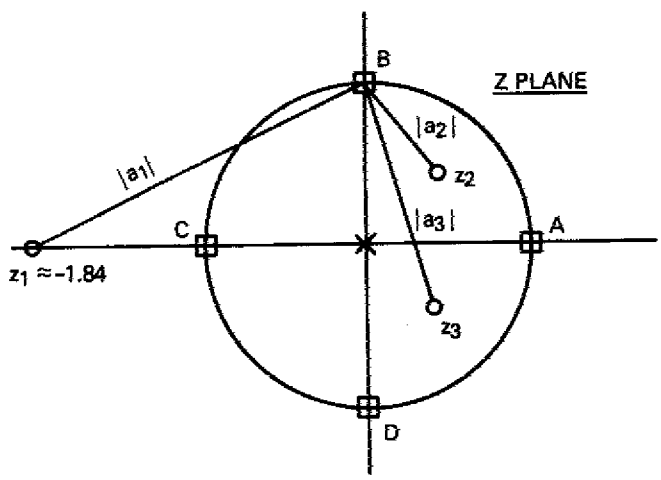

Fig. 13 — Poles and zeroes of the Z-transform for Barker code 4.
A, B, C, D are sampling points of the Z-transform.

The sampling points of $X(Z)$ are A, B, C, D. When $X(Z)$ is evaluated at those points, we get the DFT $X(K)$ of the sequence.

As a geometrical interpretation, we see that the *exact* values of Z_1, Z_2, Z_3 present an *exact* "symmetry" towards the sampling points A, B, C, D, in the sense that the product of the magnitudes of the three phasors (from the sampling point to the zeroes Z_1, Z_2, Z_3) gives exactly the value 2, for each sampling point. In Fig. 13, we sketched the three phasors for the sampling point B.

For point B:

$$|(j - Z_1)\ (J - Z_2)\ (j - Z_3)| = |a_1| \cdot |a_2| \cdot |a_3| = 2. \tag{75.1}$$

For point A:

$$|(1 - Z_1)\ (1 - Z_2)\ (1 - Z_3)| = 2, \tag{75.2}$$

and similarly for points C and D.

This property (75) is evident when looking at the Z transform:

$$X(Z) = 1 + Z^{-1} - Z^{-2} + Z^{-3}, \tag{76}$$

and substituting directly the sampling points A, B, C, D. But from a geometric point of view, it is a rare combination of the zeroes of $X(Z)$, that present such a "nice" symmetry.

Notice, however, that these specific zeroes of Barker code 4 (Z_1, Z_2, Z_3) do not present the above symmetry towards any number of uniformly distributed sampling points on the unity circle. For example, for eight uniformly distributed sampling points, one of them will be $Z = e^{j\pi/4}$, and substituting it in (76):

$$|X(Z = e^{j\pi/4})| = |1 + e^{-j\pi/4} - e^{-j\pi/2} + e^{-j3\pi/4}| \neq 2,$$

which means that these specific zeroes of Barker code 4 cannot be "used" for generating higher length codes.

Of course, the same analysis holds for a complex sequence $|x_i| = 1$, except that the $N - 1$ zeroes of $X(Z)$ will not be in conjugate pairs. But again for a G-polphode, these $N - 1$ zeroes of $X(Z)$ are required to present the above "symmetry" towards the N sampling points $Z = W^K$.

One might suspect that some uniform distribution of the zeroes of $X(Z)$ will give the desired symmetry. A moment of reflection shows that it is impossible since we have $N - 1$ zeroes of $X(Z)$ and N sampling points.

This means that if there is a solution, the zeroes of $X(Z)$ will be distributed on the Z plane in some "rare" combination (and, of course, not on the unity circle).

Beyond the above "symmetry" these $N - 1$ zeroes of $X(Z)$ must fulfill other requirements.

Suppose we found some "symmetric" structure (in the above sense) of the zeroes, Z_1, Z_2, ..., Z_{N-1}.

Then:

$$X(Z) = \frac{(Z - Z_1)\,(Z - Z_2)\,\ldots\,(Z - Z_{N-1})}{Z^{N-1}} = \frac{X_1\,Z^{N-1} + X_2\,Z^{N-2} + \ldots + X_N}{Z^{N-1}} \tag{77}$$

$$X(Z)\,Z^{N-1}\Big|_{Z=0} = (-Z_1)\,(-Z_2)\,\ldots\,(-Z_{N-1}) = X_N \tag{78}$$

i.e.;

$$|Z_1 \cdot Z_2 \cdot \ldots \cdot Z_{N-1}| = 1, \tag{78.1}$$

which means that some of the zeroes are outside the unity circle while the others are inside, such that their product has unity magnitude.

Another point to mention is that the necessary condition is "similar" to designing an *exact* all pass discrete filter whose finite impulse response is $h(n) = \{x_1, x_2, \ldots, x_n\}$, where $|x_i| = 1$.

In Ref. 5, it is shown that an all-pass discrete filter has a Z transform that factors to terms of the form:

$$H_1(Z) = \frac{1 - a^{-1}\,Z^{-1}}{1 - a\,Z^{-1}}, \tag{79}$$

where $0 < a < 1$ (a is real), such that the pole and the zero in (79) give a constant amplitude for *every* frequency. This is actually more than we need, since our requirement is to have constant amplitude l only in the N sampling points of $X(Z)$. But, of course, in our problem, since we have a finite length, we don't have poles of $X(Z)$ (except those in the origin), and we cannot get terms of the form (79).

FINAL COMMENTS

1. It is interesting to note that Frank codes of even length meet the requirements of constant amplitude DFT, and $R(K) + R^*(N-K) = 0$, but still they don't form G-polphodes. For example, the Frank code of length $N = 16$ is:

$$\phi_i(\text{deg}): 0,\ 0,\ 0,\ 0,\ |\ 0,\ 90,\ 180,\ -90,\ |\ 0,\ 180,\ 0,\ 180,\ |\ 0,\ -90,\ 180,\ 90\ | \tag{80}$$

$$B \begin{bmatrix} 1 & \underline{/0} \\ 1 & \underline{/0} \\ 1 & \underline{/0} \\ 1 & \underline{/0} \\ 1 & \underline{/0} \\ 1 & \underline{/90} \\ 1 & \underline{/180} \\ 1 & \underline{/-90} \\ 1 & \underline{/0} \\ 1 & \underline{/180} \\ 1 & \underline{/0} \\ 1 & \underline{/180} \\ 1 & \underline{/0} \\ 1 & \underline{/-90} \\ 1 & \underline{/180} \\ 1 & \underline{/90} \end{bmatrix} = \begin{bmatrix} 1\ \underline{/0} \\ W \\ 1\ \underline{/-90} \\ -W \\ 1\ \underline{/0} \\ W^5 \\ 1\ \underline{/90} \\ W^5 \\ 1\ \underline{/0} \\ -W \\ 1\ \underline{/-90} \\ W \\ 1\ \underline{/0} \\ -W^5 \\ 1\ \underline{/90} \\ -W^5 \end{bmatrix} \tag{81}$$

where $W = e^{-j2\pi/16} = 1\underline{/-22.5°}$.

Also, it is easy to verify that $R(K) + R^*(N-K) = 0$, but clearly some time sidelobes of the Frank code are bigger than unity magnitude.

This provides evidence again that our analysis gave necessary conditions, but not sufficient ones. Therefore, we have to search for the solution.

Note also that Barker 4 codes are actually a special case of Frank codes. The analysis can help in searching for structures of either the code sequence x_i, or the distribution of the zeroes of $X(Z)$.

2. An issue to be further investigated: Is it possible to approximate the requirement of constant amplitude DFT of the sequence, and thus approach the "Barker level" of the autocorrelation function? At least intuitively we might think that a constant amplitude DFT is a "good property."

CONCLUSION

The motivation for the analysis was to find a finite length code with Barker type autocorrelation function beyond the known ones. Though no specific code was found, the analysis derived necessary requirements for even-length Barker codes and G-polphodes. These requirements can reduce the search problem for the above codes.

The different points of view presented here (time domain, DFT of sequences, the Z-transform geometrical interpretation, linear algebra) might also suggest structures and properties of good codes, which only approach the Barker level in the autocorrelation function.

ACKNOWLEDGMENT

I thank B. Lewis and F. Kretschmer for their strong support in doing the study.

REFERENCES

1. C. Cook and Bernfeld, *Radar Signals*, Academic Press, New York, London, 1967, p. 245.

2. R. Turyn, "On Barker Codes of Even Length," Proc. IRE (Correspondence), **51**, 1963, p. 1256.

3. S. Golomb and R. Scholtz, "Generalized Barker Sequences," IEEE Transactions on Information Theory, **IT-11**, No. 4, Oct. 1965.

4. F. Aynes, *Theory and Problems of Matrices*, Schaum's Outline Series, McGraw-Hill, New York, 1962.

5. A. Oppenheim and R. Schafer, *Digital Signal Processing*, Prentice-Hall, Inc., Englewood Cliffs, NJ, 1975.

Appendix

FURTHER PROPERTIES OF AN EIGENVECTOR G-POLPHODE

We have seen that an eigenvector G-polphode must fulfill Eq. (68.2) of the text:

$$B\underline{X} = \pm 1 \cdot \underline{X} \tag{A1}$$

Let $\underline{X}_a$, $\underline{X}_b$ be eigenvectors of B, which correspond to $\lambda = +1$, $\lambda = -1$, respectively.

$$B\underline{X}_a = \underline{X}_a \text{ (also } B^*\underline{X}_a = \underline{X}_a) \tag{A.2.1}$$

$$B\underline{X}_b = \underline{X}_b \text{ (also } B^*\underline{X}_b = -\underline{X}_b) \tag{A.2.2}$$

From (A.2.1), multiplying both sides by B:

$$BB\underline{X}_a = B\underline{X}_a \Rightarrow B^2\underline{X}_a = \underline{X}_a. \tag{A.3}$$

Similarly, from (A.2.2):

$$BB\underline{X}_b = -B\underline{X}_b \Rightarrow B^2\,\underline{X}_b = \underline{X}_b, \tag{A.4}$$

i.e., $\underline{X}_a$ and $\underline{X}_b$ are also eigenvectors of B^2; both correspond to the eigenvalue $\lambda = 1$ of B^2.

The matrix B^2 ($N \times N$ matrix) is:

$$B^2 = \begin{bmatrix} 1 & 0 & 0 & 0 & \cdots & 0 & 0 \\ 0 & 0 & 0 & 0 & \cdots & 0 & 1 \\ 0 & 0 & 0 & 0 & \cdots & 1 & 0 \\ \cdot & & & & \cdot & & \\ \cdot & & & \cdot & & & \\ \cdot & & \cdot & & & & \\ 0 & 0 & 0 & 1 & \cdots & & 0 \\ 0 & 0 & 1 & 0 & \cdots & & 0 \\ 0 & 1 & 0 & 0 & \cdots & & 0 \end{bmatrix} \tag{A.5}$$

The matrix B^2 has N eigenvalues; some of them are $\lambda = 1$, and the others are $\lambda = -1$ (by the way, the eigenvalues $\lambda = \pm 1$ of B map to the eigenvalue $\lambda = 1$ of B^2).

From (A.3), (A.5):

$$B^2\underline{X}_a = B^2 \begin{bmatrix} X_1 \\ X_2 \\ X_3 \\ X_4 \\ \cdot \\ \cdot \\ \cdot \\ X_{N-2} \\ X_{N-1} \\ X_N \end{bmatrix} = \begin{bmatrix} X_1 \\ X_N \\ X_{N-1} \\ X_{N-2} \\ \cdot \\ \cdot \\ \cdot \\ X_4 \\ X_3 \\ X_2 \end{bmatrix} = \underline{X}_a = \begin{bmatrix} X_1 \\ X_2 \\ X_3 \\ X_4 \\ \cdot \\ \cdot \\ \cdot \\ X_{N-2} \\ X_{N-1} \\ X_N \end{bmatrix}, \tag{A.6}$$

i.e.,:

$$X_N = X_2,\ X_{N-1} = X_3,\ X_{N-2} = X_4,\ \text{etc.} \tag{A.7.1}$$

The same analysis holds for $\underline{X}_b$, so that if a G-polphode eigenvector exists, it must have the structure:

$$\underline{X}_a = \begin{bmatrix} 1\,\underline{/\alpha_1} \\ 1\,\underline{/\alpha_2} \\ 1\,\underline{/\alpha_3} \\ 1\,\underline{/\alpha_4} \\ \cdot \\ \cdot \\ \cdot \\ 1\,\underline{/\alpha_{N/2+1}} \\ \cdot \\ \cdot \\ \cdot \\ 1\,\underline{/\alpha_4} \\ 1\,\underline{/\alpha_3} \\ 1\,\underline{/\alpha_2} \end{bmatrix};\ \underline{X}_b = \begin{bmatrix} 1\,\underline{/\beta_1} \\ 1\,\underline{/\beta_2} \\ 1\,\underline{/\beta_3} \\ 1\,\underline{/\beta_4} \\ \cdot \\ \cdot \\ \cdot \\ 1\,\underline{/\beta_{N/2+1}} \\ \cdot \\ \cdot \\ \cdot \\ 1\,\underline{/\beta_4} \\ 1\,\underline{/\beta_3} \\ 1\,\underline{/\beta_2} \end{bmatrix} \tag{A.7.2}$$

Now from (A.2.1) (by conjugating) we get:

$$B^*\,\underline{X}_a^* = \underline{X}_a^*, \tag{A.8}$$

$$BB^*\,\underline{X}_a^* = B\underline{X}_a^* \Rightarrow B\underline{X}_a^* = \underline{X}_a^*, \tag{A.9}$$

and similarly,

$$B\underline{X}_b^* = -\underline{X}_b^*. \tag{A.10}$$

Equations (A.2.1) and (A.9) mean that if $\underline{X}_a$ is an eigenvector of B (for $\lambda = 1$), then $\underline{X}_a^*$ is also an eigenvector of B (also for $\lambda = 1$). If $\underline{X}_a$ is real, then $\underline{X}_a^* = \underline{X}_a$ (they are identical).

But we look for an eigenvector code $\underline{X}_a$ (in which $|X_i| = 1$). We have seen in the text, that such an $\underline{X}_a$ cannot be real for $l > 2$. So $\underline{X}_a$, if it exists, is a polyphase code. Therefore, $\underline{X}_a^*$ is *another* (linearly independent to $\underline{X}_a$) eigenvector code.

Similarly, if $\underline{X}_b$ is an eigenvector code (for $\lambda = -1$), then $\underline{X}_b^*$ is another (linearly independent) eigenvector code.

To summarize, the eigenvector G-polphodes (for $l > 2$) will fulfill:

$$B\underline{X}_a = B\begin{bmatrix} 1\,\underline{/\alpha_1} \\ 1\,\underline{/\alpha_2} \\ 1\,\underline{/\alpha_3} \\ \cdot \\ \cdot \\ \cdot \\ 1\,\underline{/\alpha_{N/2+1}} \\ \cdot \\ \cdot \\ \cdot \\ 1\,\underline{/\alpha_3} \\ 1\,\underline{/\alpha_2} \end{bmatrix} = \begin{bmatrix} 1\,\underline{/\alpha_1} \\ 1\,\underline{/\alpha_2} \\ 1\,\underline{/\alpha_3} \\ \cdot \\ \cdot \\ \cdot \\ 1\,\underline{/\alpha_{N/2+1}} \\ \cdot \\ \cdot \\ \cdot \\ 1\,\underline{/\alpha_3} \\ 1\,\underline{/\alpha_2} \end{bmatrix}, \quad B\underline{X}_a^* = B\begin{bmatrix} 1\,\underline{/-\alpha_1} \\ 1\,\underline{/-\alpha_2} \\ 1\,\underline{/-\alpha_3} \\ \cdot \\ \cdot \\ \cdot \\ 1\,/-\alpha_{N/2+1} \\ \cdot \\ \cdot \\ \cdot \\ 1\,\underline{/-\alpha_3} \\ 1\,\underline{/-\alpha_2} \end{bmatrix} = \begin{bmatrix} 1\,\underline{/-\alpha_1} \\ 1\,\underline{/-\alpha_2} \\ 1\,\underline{/-\alpha_3} \\ \cdot \\ \cdot \\ \cdot \\ 1\,/-\alpha_{N/2+1} \\ \cdot \\ \cdot \\ \cdot \\ 1\,\underline{/-\alpha_3} \\ 1\,\underline{/-\alpha_4} \end{bmatrix} \tag{A.11}$$

$$B\underline{X}_b = B\begin{bmatrix} 1\,\underline{/\beta_1} \\ 1\,\underline{/\beta_2} \\ 1\,\underline{/\beta_3} \\ \cdot \\ \cdot \\ \cdot \\ 1\,\underline{/\beta_{N/2+1}} \\ \cdot \\ \cdot \\ \cdot \\ 1\,\underline{/\beta_3} \\ 1\,\underline{/\beta_2} \end{bmatrix} = \begin{bmatrix} 1\,\underline{/\beta_1} \\ 1\,\underline{/\beta_2} \\ 1\,\underline{/\beta_3} \\ \cdot \\ \cdot \\ \cdot \\ 1\,\underline{/\beta_{N/2+1}} \\ \cdot \\ \cdot \\ \cdot \\ 1\,\underline{/\beta_3} \\ 1\,\underline{/\beta_2} \end{bmatrix}, \quad B\underline{X}_b^* = B\begin{bmatrix} 1\,\underline{/-\beta_1} \\ 1\,\underline{/-\beta_2} \\ 1\,\underline{/-\beta_3} \\ \cdot \\ \cdot \\ \cdot \\ 1\,\underline{/-\beta_{N/2+1}} \\ \cdot \\ \cdot \\ \cdot \\ 1\,\underline{/-\beta_3} \\ 1\,\underline{/-\beta_2} \end{bmatrix} = -\begin{bmatrix} 1\,\underline{/-\beta_1} \\ 1\,\underline{/-\beta_2} \\ 1\,\underline{/-\beta_3} \\ \cdot \\ \cdot \\ \cdot \\ 1\,\underline{/-\beta_{N/2+1}} \\ \cdot \\ \cdot \\ \cdot \\ 1\,\underline{/-\beta_3} \\ 1\,\underline{/-\beta_2} \end{bmatrix}. \tag{A.12}$$

Note that in (A.11), and similarly in (A.12), out of the N equations for $\underline{X}_a$, we have $N/2 - 1$ redundant equations which can be erased; the last equation is identical to the second, the $(N-1)$th equation is identical to the third, etc. Thus, if we erase the last $N/2 - 1$ equations, we are left with $N/2 + 1$ equations (some of them are also redundant) that should be solved parametrically for $\alpha_1, \alpha_2, \alpha_3, \ldots, \alpha_{N/2}, \alpha_{N/2+1}$.

Since we have parametric relations for the α_i's, we have to choose some of them such that we get the desired autocorrelation function. This again is a search problem.

Applying the above analysis for $N = 16$ we get:

$$B\underline{X}_a = \underline{X}_a$$

$\underline{X}_a^T = [1\,\underline{/\alpha_1}\ 1\,\underline{/\alpha_2}\ 1\,\underline{/\alpha_3}\ 1\,\underline{/\alpha_4}\ 1\,\underline{/\alpha_5}\ 1\,\underline{/\alpha_6}\ 1\,\underline{/\alpha_7}\ 1\,\underline{/\alpha_8}\ 1\,\underline{/\alpha_9}\ 1\,\underline{/\alpha_8}\ 1\,\underline{/\alpha_7}\ 1\,\underline{/\alpha_6}\ 1\,\underline{/\alpha_5}\ 1\,\underline{/\alpha_4}\ 1\,\underline{/\alpha_3}\ 1\,\underline{/\alpha_2}]$.

After solving the $N/2 + 1 = 9$ equations, we get the parametric relations:

$$[1\,\underline{/\alpha_3} + 1\,\underline{/\alpha_5} + 1\,\underline{/\alpha_7}] = 1/2\,[1\,\underline{/\alpha_1} + 1\,\underline{/\alpha_9}],$$

$$[1\,\underline{/\alpha_2} + 1\,\underline{/\alpha_4} + 1\,\underline{/\alpha_6} + 1\,\underline{/\alpha_8}] = [1\,\underline{/\alpha_1} - 1\,\underline{/\alpha_9}],$$

$$[1\,\underline{/\alpha_2} - 1\,\underline{/\alpha_4} - 1\,\underline{/\alpha_6} + 1\,\underline{/\alpha_8} = [1\,\underline{/\alpha_3} - 1\,\underline{/\alpha_7}] \cdot \frac{1}{\cos\,(2 \cdot 2\pi/16)}, \tag{A.13}$$

and

$$[1\,\underline{/\alpha_4} - 1\,\underline{/\alpha_6}] = [1\,\underline{/\alpha_2} - 1\,\underline{/\alpha_8}] \cdot \frac{1 - \cos\,(2\pi/16)}{\cos\,(3 \cdot 2\pi/16)}.$$

Since the conjugate code $\underline{X}_a^*$ is also an eigenvector (also for $\lambda = 1$), we must have the above four relations when $1\,\underline{/\alpha_i}$ is replaced by $1\,\underline{/-\alpha_i}$. Adding and subtracting equations in the above eight relations (complex) gives eight real relations (with $\cos\alpha_i$ and $\sin\alpha_i$).

For example, the first equation of (A.13) together with the corresponding one (with $1\,\underline{/-\alpha_i}$) result in:

$$\cos\alpha_3 + \cos\alpha_5 + \cos\alpha_7 = 1/2\,(\cos\alpha_1 + \cos\alpha_9),$$

and

$$\sin\alpha_3 + \sin\alpha_5 = \sin\alpha_7 = 1/2\,(\sin\alpha_1 + \sin\alpha_9).$$

A code (of length 16) that satisfies the eight relations is a candidate for eigenvector G-polphode (has to be verified in the time domain).

Note also that if the structure (A.11) is a G-polphode, it is required that for any length N:

$$2\pi/3 \leqslant (\alpha_3 - \alpha_1) \leqslant 4\pi/3,$$

since the second step of the autocorrelation process gives:

$$R\,(N-2) = 1\underline{/0} + 1\underline{/\alpha_3} - \alpha_1,$$

and its magnitude must be smaller than or equal to one.