28 MAY REC'D

4000

NRL Report 7994

AD

A Fortran Computer Program for Calculating the Linear Prolate Functions

4100

A. L. VAN BUREN

Transducer Branch
Acoustics Division

May 10, 1976

NAVAL RESEARCH LABORATORY
Washington, D.C.

Approved for public release; distribution unlimited.

SECURITY CLASSIFICATION OF THIS PAGE (When Data Entered)

REPORT DOCUMENTATION PAGE

READ INSTRUCTIONS BEFORE COMPLETING FORM

1. REPORT NUMBER
NRL Report 7994

2. GOVT ACCESSION NO.

3. RECIPIENT'S CATALOG NUMBER

4. TITLE (and Subtitle)
A FORTRAN COMPUTER PROGRAM FOR CALCULATING THE LINEAR PROLATE FUNCTIONS

5. TYPE OF REPORT & PERIOD COVERED
Final report on one phase of a continuing NRL problem

6. PERFORMING ORG. REPORT NUMBER

7. AUTHOR(s)
A. L. Van Buren

8. CONTRACT OR GRANT NUMBER(s)

9. PERFORMING ORGANIZATION NAME AND ADDRESS
Naval Research Laboratory
Washington, D.C. 20375

10. PROGRAM ELEMENT, PROJECT, TASK AREA & WORK UNIT NUMBERS
NRL Problem S01-29
Project 61153N-31, RR 1310341, Task 5227

11. CONTROLLING OFFICE NAME AND ADDRESS
Department of the Navy
Office of Naval Research
Arlington, VA. 22217

12. REPORT DATE
May 10, 1976

13. NUMBER OF PAGES
44

14. MONITORING AGENCY NAME & ADDRESS(if different from Controlling Office)

15. SECURITY CLASS. (of this report)
UNCLASSIFIED

15a. DECLASSIFICATION/DOWNGRADING SCHEDULE

16. DISTRIBUTION STATEMENT (of this Report)
Approved for public release: distribution unlimited

17. DISTRIBUTION STATEMENT (of the abstract entered in Block 20, if different from Report)

18. SUPPLEMENTARY NOTES

19. KEY WORDS (Continue on reverse side if necessary and identify by block number)

Linear prolate functions	Computer programs
Linear prolate eigenvalues	Band limited
Spheroidal wave functions	Time limited
Prolate spheroids	

20. ABSTRACT (Continue on reverse side if necessary and identify by block number)

The representation of band-limited and time-limited physical processes is greatly facilitated by the use of the linear prolate functions and eigenvalues. These functions possess the powerful property of orthogonality over both a finite interval and the infinite interval. A computer program called LINPRO has been developed to numerically evaluate in double-precision arithmetic the linear prolate functions and eigenvalues for a wide range of order and argument. The program is written in universal Fortran and should run on any computer that accepts this language. This report

(Continued)

DD FORM 1 JAN 73 1473 EDITION OF 1 NOV 65 IS OBSOLETE
S/N 0102-014-6601

SECURITY CLASSIFICATION OF THIS PAGE (When Data Entered)

20. (Continued)

first describes the theory of the prolate spheroidal wave functions used in the construction of the linear prolate functions and eigenvalues. Next the principal features of the program LINPRO are discussed. Included are descriptions of the parameter input, allowable parameter ranges, required computer storage, computational procedure, accuracy of the results, computation time, and printed output. Finally a sample output and a computer listing of LINPRO are attached as Appendixes.

CONTENTS

INTRODUCTION 1

ANALYSIS 2

Solution of the Helmholtz Equation in Prolate Spheroidal Coordinates 2
Prolate Angular Functions of the First Kind 5
Prolate Radial Functions of the First Kind 8
Brief Introduction to the Linear Prolate Functions 9

DESCRIPTION OF THE COMPUTER PROGRAM LINPRO . . . 10

Significant Fortran Variable Names 11
Major Computation Blocks 16
Parameter Input 18
Parameter Ranges 19
Dimensions and Storage 19
Computational Procedure 21
Calculation of $A_{0\ell}$ and d_n 21
Calculation of the Spherical Bessel Functions 23
Calculation of the Legendre Functions 24
Calculation of the Linear Prolate Eigenvalues 24
Calculation of the Linear Prolate Functions 25
Accuracy of the Results 25
Computation Time 26
Printed Output 27

ACKNOWLEDGMENT 27

REFERENCES 27

APPENDIX A — Sample Output from LINPRO 30

APPENDIX B — Listing in Fortran of LINPRO 32

A FORTRAN COMPUTER PROGRAM FOR CALCULATING THE LINEAR PROLATE FUNCTIONS

INTRODUCTION

Many physical systems can be mathematically modeled by a complex function of a single real variable f(t) whose Fourier transform is limited to the passband $|\omega| \leqslant \Omega$ and which is assumed integrable (in the absolute square) over the interval $[-\infty, \infty]$. An analytic representation of the system in the interval $[-T/2, T/2]$ is greatly facilitated by the availability of a set of band-limited functions ψ_ℓ that are orthogonal and complete over both the finite interval $[-T/2, T/2]$ and the infinite interval $[-\infty, \infty]$. These requirements are uniquely met by the linear prolate functions $\psi_\ell(c, t)$, constructed from the prolate angular spheroidal functions of the first kind $S_{0\ell}^{(1)}(c, t)$, and the associated linear prolate eigenvalues $\lambda_\ell(c)$, constructed from the prolate radial spheroidal functions of the first kind $R_{0\ell}^{(1)}(c, 1)$. That is (by definition)

$$\psi_\ell(c, t) = \frac{\left(\frac{2\lambda_\ell}{T}\right)^{1/2} S_{0\ell}^{(1)}\left(c, \frac{2t}{T}\right)}{\left\{\int_{-1}^{1} [S_{0\ell}^{(1)}(c, s)]^2 \, ds\right\}^{1/2}} \tag{1}$$

and

$$\lambda_\ell(c) = \left(\frac{2c}{\pi}\right) [R_{0\ell}^{(1)}(c, 1)]^2, \tag{2}$$

where $c = T\Omega/2$.

Spheroidal functions have been studied extensively since their discovery by Niven [1] in 1880. Examples of such studies are the monographs by Meixner and Schäfke [2] and Flammer [3]. However not until about 1960 did Slepian, Pollak, and Landau [4-7] find that the spheroidal functions possess special properties that have since been shown to lead to their application to phenomena as diverse as acoustics, antennas, optical diffraction, filters, and noise.

It is convenient to define the function

$$\hat{\psi}_\ell(c, x) = \frac{\sqrt{\lambda_\ell} S_{0\ell}^{(1)}(c, x)}{\left\{\int_{-1}^{1} [S_{0\ell}^{(1)}(c, s)]^2 \, ds\right\}^{1/2}}, \tag{3}$$

Manuscript submitted March 16, 1976.

which has the advantage of not containing T explicitly. The linear prolate function for a given T is then given by

$$\psi_\ell(c, t) = \left(\frac{2}{T}\right)^{1/2} \hat{\psi}_\ell\left(c, \frac{2t}{T}\right). \tag{4}$$

The function $\hat{\psi}_\ell(c, x)$ will be referred to in this report as a linear prolate function. The names linear prolate function and linear prolate eigenvalue were given to $\psi_\ell(c, t)$ and $\lambda_\ell(c)$ by Freiden [8]. They are useful in distinguishing these functions from the prolate spheroidal wave functions used in their construction.

The computer program LINPRO (*lin*ear *pro*late functions) calculates, in double-precision arithmetic, numerical values for $\lambda_\ell(c)$ and $\hat{\psi}_\ell(c, x)$ for desired values of c and x and for all integer values of ℓ from 0 to the largest value desired. The program is written in universal Fortran and should run on any computer that accepts this language.

ANALYSIS

Solution of the Helmholtz Equation in Prolate Spheroidal Coordinates

The prolate spheroidal system can be formed by rotating the two-dimensional elliptic coordinate system, consisting of confocal ellipses and hyperbolas, about the major axis of the ellipses. The prolate spheroidal coordinates (ξ, η, ϕ) with $1 \leqslant \xi < \infty$, $-1 \leqslant \eta \leqslant 1$, $0 \leqslant \phi < 2\pi$ are related to the cartesian coordinates (x, y, z) by the transformation

$$x = \frac{a}{2}\,[(\xi^2 - 1)(1 - \eta^2)]^{1/2} \cos\phi, \tag{5a}$$

$$y = \frac{a}{2}\,[(\xi^2 - 1)(1 - \eta^2)]^{1/2} \sin\phi, \tag{5b}$$

$$z = \frac{a}{2}\,\xi\eta, \tag{5c}$$

where a is the interfocal distance. The spheroidal coordinates ξ = const, η = const, ϕ = const define the following set of orthogonal surfaces, as shown in Fig. 1:

ellipsoid of revolution: $$\frac{x^2 + y^2}{(a/2)^2\,(\xi^2 - 1)} + \frac{z^2}{(a/2)^2\,\xi^2} = 1, \tag{6a}$$

hyperboloid of two sheets: $$\frac{x^2 + y^2}{(a/2)^2\,(1 - \eta^2)} - \frac{z^2}{(a/2)^2\,\eta^2} = -1, \tag{6b}$$

half plane containing the z axis: $$\phi = \tan^{-1}(y/x). \tag{6c}$$

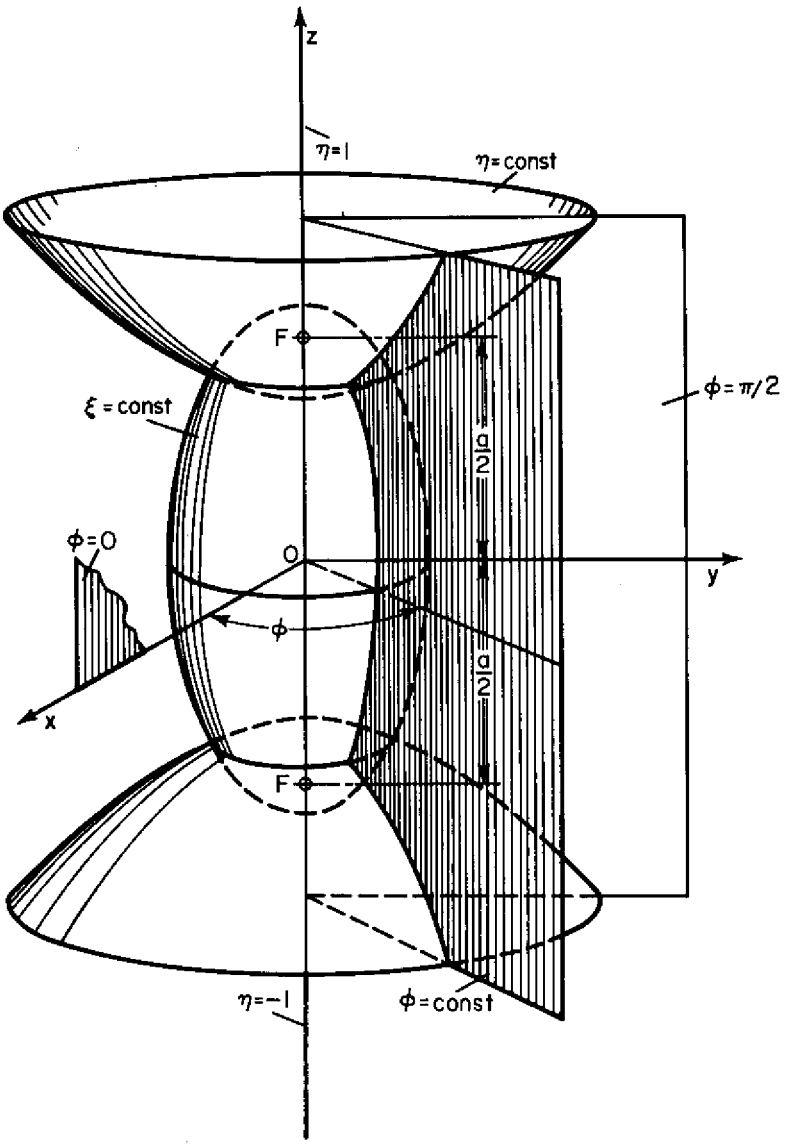

Fig. 1 — The prolate spheroidal coordinate system

The Helmholtz wave equation

$$(\nabla^2 + k^2)X = 0, \tag{7}$$

is separable in prolate spheroidal coordinates. The factored solution is given by

$$X_{m\ell}(c; \xi, \eta, \phi) = R_{m\ell}(c, \xi)S_{m\ell}(c, \eta)\Phi_m(\phi), \tag{8}$$

where $c = ka/2$ and where the radial function $R_{m\ell}(c, \xi)$, the angular function $S_{m\ell}(c, \eta)$, and the azimuthal function $\Phi_m(\phi)$ satisfy the ordinary differential equations

$$\frac{d}{d\xi}\left[(\xi^2 - 1)\frac{dR_{m\ell}}{d\xi}\right] - \left[A_{m\ell} - c^2\xi^2 + \frac{m^2}{\xi^2 - 1}\right]R_{m\ell} = 0, \tag{9}$$

$$\frac{d}{d\eta}\left[(1 - \eta^2)\frac{dS_{m\ell}}{d\eta}\right] + \left[A_{m\ell} - c^2\eta^2 - \frac{m^2}{1 - \eta^2}\right]S_{m\ell} = 0, \tag{10}$$

and

$$\frac{d^2\Phi_m}{d\phi^2} + m^2\Phi_m = 0. \tag{11}$$

In physical problems in which the field has to be periodic and unique over the range of the azimuthal coordinate ϕ, it is required that m be an integer, chosen to be nonnegative. For fixed m and $c \neq 0$ the numbers $A_{m\ell}(c)$ for which Eqs. (9) and (10) have nontrivial convergent solutions are ordered numerically in an ascending series and labeled with the integers $\ell = m$, $\ell = m + 1$, etc. In the limit $c \to 0$, Eq. (10) reduces to the ordinary differential equation for the associated Legendre function whose separation constants $A_{m\ell}$ are equal to $\ell(\ell + 1)$.

The two independent solutions of Eq. (9) are identified as the radial function of the first kind $R^{(1)}_{m\ell}(c, \xi)$ and the radial function of the second kind $R^{(2)}_{m\ell}(c, \xi)$. Similarly the two independent solutions of Eq. (10) are called the angular function of the first kind $S^{(1)}_{m\ell}(c, \eta)$ and the angular function of the second kind $S^{(2)}_{m\ell}(c, \eta)$. Equations (9) and (10) are essentially the same except for range.

Three volumes of tables of numerical values for the prolate radial functions and their first derivatives with respect to ξ were published in 1970 [9]. These volumes contain entries for the following range of parameters: m = 0 (Volume 1), m = 1 (Volume 2), m = 2 (Volume 3); ℓ = m, m + 1, ..., m + 49; ξ = 1.00000001, 1.0000001, ..., 1.01, 1.02 (0.02)1.2,* 1.4 (0.2) 2.0, 4.0 (2.0) 10.0; c = 0.1 (0.1) 1.0, 2.0 (1.0) 10.0, 12.0 (2.0) 30.0, 35.0 40.0. A single volume of tables of numerical values for the prolate angular functions and the linear prolate eigenvalues was published in 1975 [10]. The range of variables covered in this volume is m = 0; ℓ = 0 (1) 49; $\theta = 0°$ (1°) 90°, where $\eta = \cos\theta$; c = 0.1 (0.1) 1.0, 2.0 (1.0) 10.0, 12.0 (2.0) 30.0, 35.0, 40.0. The numerical values given

*The notation 1.02 (0.02) 1.2 indicates 1.02, 1.04, 1.06, ..., 1.2.

in Ref. 10 can be used to construct corresponding values for the linear prolate functions. Three volumes of oblate radial functions [11] and one volume of oblate angular functions [12] were also published.

The double-precision Fortran computer programs used to generate the tables are documented in a series of NRL reports [13-15]. Unfortunately these computer programs were developed around the large exponent size (±307) of the CDC 3800 computer at NRL and are not easily modified to run on computers with a significantly smaller exponent range. The program LINPRO however is designed to run on computers with any exponent range.

Since the linear prolate functions and eigenvalues are constructed from the zero-order spheroidal functions of the first kind $S_{0\ell}^{(1)}(c, \eta)$ and $R_{0\ell}^{(1)}(c, 1)$, the following discussion will be restricted to these functions.

Prolate Angular Functions of the First Kind

Since the angular functions of the first kind reduce to the Legendre functions of the first kind in the limit as $c \to 0$, it is convenient to expand $S_{0\ell}^{(1)}(c, \eta)$ in the following series of Lengendre functions:

$$S_{0\ell}^{(1)}(c, \eta) = \sum_{n=0,1}^{\infty}{}' \, d_n(c|0\ell)P_n(\eta), \tag{12}$$

where the prime sign indicates that n = 0, 2, 4, ... if ℓ is even and n = 1, 3, 5, ... if ℓ is odd. Substitution of Eq. (12) into Eq. (10) with m = 0 and use of the recursion formulas for Legendre functions lead to the following three-term recursion formula in the coefficients $d_n(c|0\ell)$:

$$\alpha_n d_{n+2} + \beta_n d_n + \gamma_n d_{n-2} = 0, \qquad n \geqslant 0, \tag{13}$$

where

$$\alpha_n = \frac{(n+2)(n+1)}{(2n+3)(2n+5)} c^2,$$

$$\beta_n = n(n+1) - A_{0\ell} + \frac{2n(n+1)-1}{(2n+3)(2n-1)} c^2,$$

$$\gamma_n = \frac{n(n-1)}{(2n-3)(2n-1)} c^2. \tag{14}$$

If the choice of $A_{0\ell}$ is arbitrary, solutions given by Eq. (12) with constants d_n determined by Eq. (13) are divergent at either $\eta = 1$ or at $\eta = -1$. However in physical applications it is necessary that $S_{0\ell}^{(1)}(c, \eta)$ be finite at both of these points. A search is therefore made

to find special values for $A_{0\ell}$ which make d_n satisfy Eq. (13), at the same time satisfying the condition

$$\lim_{n \to \infty} \frac{d_{n+2}}{d_n} \to 0. \tag{15}$$

Use of these characteristic values leads to successful expansions for $S_{0\ell}^{(1)}(c, \eta)$ of the form given in Eq. (12). Since the Legendre functions can be analytically continued into the region $|\eta| > 1$, the series expansion of Eq. (12) can be used also in this region. It is easy to show that this series converges uniformly for $|\eta| > 1$, since in the limit as n approaches ∞, the ratio $P_{n+2}(\eta)/P_n(\eta)$ approaches the constant $(|\eta| + \sqrt{\eta^2 - 1})^2$ and the ratio d_{n+2}/d_n approaches $-c^2/4n^2$.

An efficient algorithm for the determination of $A_{0\ell}$ and d_n has been developed using a procedure described by Bouwkamp [16]. This will be discussed in the section on the computational procedure. The d_n thus obtained are normalized to satisfy the requirement that $S_{0\ell}^{(1)}(c, \eta)$ have the same normalization factor as $P_\ell(\eta)$:

$$N_{0\ell} = \int_{-1}^{1} [S_{0\ell}^{(1)}(c, \eta)]^2 \, d\eta = \int_{-1}^{1} [P_\ell(\eta)]^2 \, d\eta = \frac{2}{(2\ell + 1)} . \tag{16}$$

Substituting the expansion for $S_{0\ell}^{(1)}(c, \eta)$ given in Eq. (12) and using the known orthogonality properties of the Legendre functions, one obtains the normalizing relation for d_n:

$$\sum_{n=0,1}^{\infty}{}' \frac{2}{2n + 1} [d_n(c|0\ell)]^2 = \frac{2}{2\ell + 1} . \tag{17}$$

This normalization scheme was first used by Meixner and Schäfke [2]. It has the practical advantage of eliminating the need to numerically evaluate the normalization factor $N_{0\ell}(c)$ which is often encountered in problems envolving expansions in angular functions. With this normalization the denominator in the definition of the linear prolate functions given in Eq. (1) reduces to $[2/(2\ell + 1)]^{1/2}$. The angular-function tables of Ref. 10 contain the Meixner-Schäfke normalization. An alternative way to insure that each angular function reduces exactly to the corresponding Legendre function when c becomes 0 is to match their behavior at a particular value of η. For example, Flammer [3] and Chu and Stratton [17] normalize at $\eta = 0$, whereas Morse and Feshbach [18] and Page [19] choose $\eta = 1$. Note that the linear prolate functions are defined, Eq. (1), so that their value is independent of the normalization used for the angular functions.

Several graphs depicting the behavior of $S_{00}^{(1)}(c, \eta)$, $S_{01}^{(1)}(c, \eta)$, and $S_{02}^{(1)}(c, \eta)$ as a function of $\theta = \cos^{-1} \eta$ for selected values of c are given in Fig. 2. The behavior for $\theta = 90°$ to $180°$ is not shown explicitly, since the angular functions exhibit the same even or odd symmetry as the corresponding Legendre functions.

The prolate angular function $S_{0\ell}^{(1)}(c, \eta)$ possesses exactly ℓ zeros in the interval $-1 \leqslant \eta \leqslant 1$. When $c \to 0$, these zeros become identical to the zeros of the corresponding Legendre function $P_\ell(\eta)$. When $c \to \infty$, the prolate angular function $S_{0\ell}^{(1)}(c, \eta)$ becomes

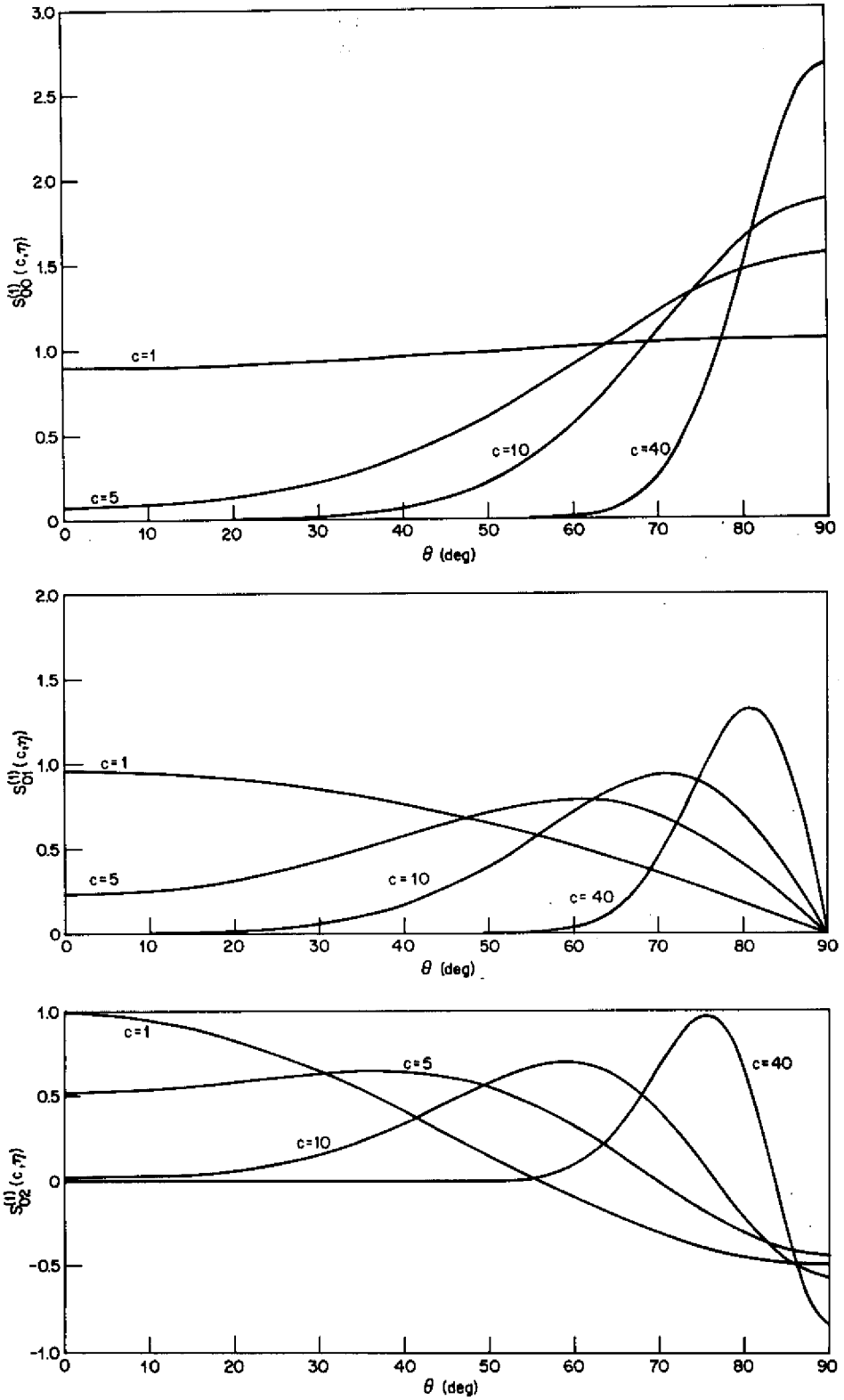

(a) Behavior of $S_{00}^{(1)}(c, \eta)$

(b) Behavior of $S_{01}^{(1)}(c, \eta)$

(c) Behavior of $S_{02}^{(1)}(c, \eta)$

Fig. 2 — Behavior of $S_{00}^{(1)}(c, \eta)$, $S_{01}^{(1)}(c, \eta)$, and $S_{02}^{(1)}(c, \eta)$ as a function of $\theta = \cos^{-1} \eta$ for selected values of c.

extremely small everywhere other than in the narrow region $|\eta| << [(2\ell + 1)/c]^{1/2}$, and the zeros are squeezed toward $\eta = 0$. Examination of the asymptotic behavior of Eq. (10) shows that the zeros approach those of the Hermite polynomial $H_\ell(\sqrt{c\eta})$ [20]. This squeezing behavior as c increases is seen in Fig. 2.

Prolate Radial Functions of the First Kind

A useful expression for the radial function $R_{0\ell}^{(1)}(c, \xi)$ can be obtained from the expression given in Eq. (12) for the angular function $S_{0\ell}^{(1)}(c, \eta)$ by means of an integral transform procedure outlined by Morse and Feshbach [18]. The result is

$$R_{0\ell}^{(1)}(c, \xi) = \frac{1}{\sum_{r=0,1}^{\infty}{}' d_r(c|0\ell)} \left\{ \sum_{n=0,1}^{\infty}{}' i^{n-\ell} d_n(c|0\ell) j_n(c\xi) \right\}, \tag{18}$$

where again the prime on the summation indicates that even or odd terms are taken depending on whether ℓ is even or odd respectively. Note that $R_{0\ell}^{(1)}(c, \xi)$ is independent of the normalization of the coefficients $d_n(c|0\ell)$.

Since both $R_{0\ell}^{(1)}(c, \xi)$ and $S_{0\ell}^{(1)}(c, \eta)$ satisfy essentially the same differential equation, they must be proportional to each other. That is,

$$S_{0\ell}^{(1)}(c, z) = \kappa_{0\ell}^{(1)}(c) R_{0\ell}^{(1)}(c, z), \tag{19}$$

where $\kappa_{0\ell}^{(1)}(c)$ is a joining factor and where the angular and radial functions are extended by analytic continuation beyond the region where they were originally defined. The joining factor is obtained from Eqs. (12) and (18) by matching the behavior of the angular and radial functions at $z = 0$ and is given by

$$\kappa_{0\ell}^{(1)}(c) = \frac{i^\ell}{d_0(c|0\ell)} \left[\sum_{r=0}^{\infty}{}' d_r(c|0\ell) \right] \sum_{n=0}^{\infty}{}' d_n(c|0\ell) \frac{i^n n!}{2^n [(n/2)!]^2}, \ \ell \text{ even}, \tag{20a}$$

$$\kappa_{0\ell}^{(1)}(c) = \frac{3i^{\ell-1}}{d_1(c|0\ell)} \left[\sum_{r=1}^{\infty}{}' d_r(c|0\ell) \right] \sum_{n=1}^{\infty}{}' d_n(c|0\ell) \frac{i^{n-1}(n+1)!}{2^n [(n-1)/2]![(n+1)/2]!}, \ \ell \text{ odd}. \tag{20b}$$

The Bessel-function expansion of Eq. (18) is a reasonably well behaved series for numerically evaluating $R_{0\ell}^{(1)}(c, \xi)$ in the range $1 \leqslant \xi < \infty$. Therefore $S_{0\ell}^{(1)}(c, \eta)$ can be evaluated in the same range $1 \leqslant \eta < \infty$ by the use of

$$S_{0\ell}^{(1)}(c, \eta) = \frac{\kappa_{0\ell}^{(1)}(c)}{\sum_{r=0,1}^{\infty}{}' d_r(c|0\ell)} \left[\sum_{n=0,1}^{\infty}{}' i^{n-\ell} d_n(c|0\ell) j_n(c\eta) \right] \tag{21}$$

Equation (21) is equally useful for negative values of η in the range $-\infty < \eta \leqslant -1$.

A convenient expression for $R_{0\ell}^{(1)}(c, 1)$ is obtained using Eq. (19) and the expression for $S_{0\ell}^{(1)}(c, 1)$ given by Eq. (12). The result is

$$R_{0\ell}^{(1)}(c, 1) = \frac{\sum_{n=0,1}^{\infty}{}' d_n(c|0\ell)}{\kappa_{0\ell}^{(1)}(c)} . \tag{22}$$

Brief Introduction to the Linear Prolate Functions

The factored solutions $S_{m\ell}^{(1)}(c, \eta)$ and $R_{m\ell}^{(1)}(c, \xi)$ provide a convenient expansion of plane waves in spheroidal coordinates:

$$e^{i\mathbf{k}\cdot\mathbf{r}} = 2 \sum_{m,\ell} \frac{\epsilon_m i^\ell}{N_{m\ell}} S_{m\ell}^{(1)}(c, \cos\theta_0) S_{m\ell}^{(1)}(c, \eta) R_{m\ell}^{(1)}(c, \xi) \cos[m(\phi - \phi_0)], \tag{23}$$

where the wave vector $\mathbf{k}$ is given by $k(\sin\theta_0 \cos\phi_0\, \mathbf{e}_x + \sin\theta_0 \sin\phi_0\, \mathbf{e}_y + \cos\theta_0\, \mathbf{e}_z)$ and the point $\mathbf{r}$ has cartesian and spheroidal coordinates (x, y, z) and (ξ, η, ϕ) respectively, so that

$$\mathbf{k}\cdot\mathbf{r} = k(x \sin\theta_0 \cos\phi_0 + y \sin\theta_0 \sin\phi_0 + z \cos\theta_0) \tag{24}$$

or

$$\mathbf{k}\cdot\mathbf{r} = c[(\xi^2 - 1)^{1/2} (1 - y^2)^{1/2} \sin\theta_0 \cos(\phi - \phi_0) + \xi\eta \cos\theta_0]. \tag{25}$$

The coefficient ϵ_m equals 1 if $m = 0$ and equals 2 otherwise. The normalization $N_{m\ell}$ is given by

$$N_{m\ell} = \int_{-1}^{1} [S_{m\ell}^{(1)}(c, \eta)]^2 \, d\eta. \tag{26}$$

By multiplying the left- and right-hand sides by $\cos[p(\phi - \phi_0)] S_{pq}(c, \eta)$ and integrating over $\phi - \phi_0$ and $s = \cos\theta_0$, one obtains the integral equation

$$2S_{m\ell}^{(1)}(c, \eta) R_{m\ell}^{(1)}(c, \xi) = i^{m-\ell} \int_{-1}^{1} e^{ic\xi\eta s} J_m[c(\xi^2 - 1)^{1/2} (1 - \eta^2)^{1/2} \sin\theta_0] S_{m\ell}^{(1)}(c, s) \, ds. \tag{27}$$

Choosing m = 0 and $\xi = 1$, using the definitions for the linear prolate functions and eigenvalues given in Eqs. (1) and (2), and making a transformation of coordinates, one obtains the expression

$$\int_{-T/2}^{T/2} \psi_\ell(c, t) e^{i\omega t} dt = i^\ell (\pi \lambda_\ell T/\Omega)^{1/2} \psi_\ell\left(c, \frac{\omega T}{2\Omega}\right), \tag{28}$$

for ω real. Thus the linear prolate functions $\psi_\ell(c, t)$ possess the powerful property that they are invariant to the operation of a finite Fourier transform. Such a property is useful in analyzing optical (diffraction) systems by Fourier methods [21].

Multiplying both sides of Eq. (28) by $e^{-i\omega s}$ and integrating with respect to ω from $-\Omega$ to $+\Omega$, one obtains a second integral transform with many useful applications:

$$\int_{-T/2}^{T/2} \psi_\ell(c, t) \frac{\sin \Omega(s - t)}{\pi(s - t)} dt = \lambda_\ell(c) \psi_\ell(c, s), \text{ for all s.} \tag{29}$$

For example this transform can be shown to represent the resonance condition for the confocal laser with rectangular, spherical endplates [22].

The property of orthogonality over both finite and infinite ranges provides a valuable extrapolation formula for band-limited functions. If a band-limited function f(t) is known over a finite interval T, then it is known everywhere. In mathematical terms, when the ψ_ℓ are available, one can write

$$f(t) = \sum_{\ell=0}^{\infty} \frac{\psi_\ell(c, t) \int_{-T/2}^{T/2} f(t') \psi_\ell(c, t') dt'}{\lambda_\ell(c)} . \tag{30}$$

The significance of this property is that, in principle, one can restore information outside the interval $-T/2 \leqslant t \leqslant T/2$ from a knowledge of the field over only the interval. In practice the restoration is degraded by the presence of noise.

The preceding discussion is intended only as a brief introduction. The reader is referred to the article by Freiden [8] for an excellent and thorough review of the mathematical properties and optical applications of the linear prolate functions. Applications to the synthesis of planar antenna sources are discussed in a monograph by Rhodes [23].

DESCRIPTION OF THE COMPUTER PROGRAM LINPRO

The computer program LINPRO calculates, in double-precision arithmetic, numerical values for $\lambda_\ell(c)$ and $\hat{\psi}_\ell(c, x)$, as defined in Eq. (4), for desired values of c and x and for all integer values of ℓ from 0 to the largest value requested. The program is written in universal Fortran and should run on any computer that accepts this computer language.

LINPRO is designed to accommodate the word length and exponent range that is available on the user's computer. The first two executable statements in the listing of LINPRO given in Appendix B are ND = 16 and NEX = 75. These statements must be changed, if necessary, to specify the number of decimal digits ND and the maximum exponent size NEX available for double-precision numbers. The user of LINPRO must also set the array dimensions large enough for the desired input. This will be discussed in detail in a subsection entitled "Dimensions and Storage."

No other changes are necessary to prepare LINPRO for the user's computer. As a test of the universality of LINPRO, it was run on both the CDC 3800 computer with ND = 25 and NEX = 307 and the Texas Instruments ASC computer with ND = 16 and NEX = 75. The test was successful over the entire range of allowable input parameter values.

The remainder of this report describes LINPRO. Included are a listing of the significant Fortran variable names and descriptions of the major computational blocks in LINPRO followed by a discussion of the parameter input, parameter ranges, dimensions and storage, computational procedure, accuracy of the results, computation time, and printed output. A sample page of output is shown in Appendix A. The listing of LINPRO is given in Appendix B.

Significant Fortran Variable Names

The significant fortran variable names in LINPRO are as follows:

ALAM	λ_ℓ.
APSI	Vector whose Ith element APSI(I) = $\hat{\psi}_\ell$[c, BARG(I)].
ARAY	Doubly dimensioned array that contains scaled values of the spherical Bessel function. The element ARAY(I, J) = HTEST j_{J-1}[BARG(I)].
ARG	Vector containing desired values of the argument x that lie in the range $\lvert x\rvert \leqslant 1$. The element ARG(I) is the Ith value of x in the range $\lvert x\rvert \leqslant 1$.
ARG1	Input parameter and initial value used to generate ARG.
BARG	Vector containing desired values of the argument x that lie in the range $\lvert x\rvert > 1$. The element BARG(I) is the Ith value of x in the range $\lvert x\rvert > 1$.
BLIST	Vector used in the Bouwkamp variational procedure. The element BLIST(I) = $\alpha_{2I+IX-2}\gamma_{2I+IX}$ from Eqs. (13) and (14).
BRAY	Doubly dimensioned array containing modified values of the Legendre function for values of x in the range $1 < \lvert x\rvert \leqslant 2$.

BRG1	Input parameter and initial value used to generate BARG.
BTEST	Constant set equal to $10^{-NDIG-2}$. It is used to determine convergence of the final sums for $\hat{\psi}_\ell(c, x)$.
CL	Characteristic value $A_{0\ell}$.
CLL, CLU	Lower and upper bounds for determining the characteristic value $A_{0\ell}$.
CTEST	Constant set equal to 10^{-ND}
DARG	Input parameter and step size used to generate ARG.
DH	Input parameter and step size used to generate desired values for c.
DL	Correction to the previous approximation for $A_{0\ell}$. It is calculated anew each iteration of the Bouwkamp procedure.
DN	Vector containing the expansion coefficients $d_n(c\|0\ell)$. The element $DN(I) = d_{2I+IX}(c\|0\ell)$. For convenience in avoiding computer overflow and underflow problems, the coefficients are normalized so that $d_{\ell+2}(c\|0\ell) = 1$.
DN0	First expansion coefficient $d_{IX}(c\|0\ell)$.
DNUM	Last sum given in the definitions of $\kappa_{0\ell}^{(1)}(c)$ in Eq. (20). It is used to obtain $R_{0\ell}^{(1)}(c, 1)$.
DTEST	Constant set equal to 10^{-ND+1}. It is used as a test to determine convergence of the Bouwkamp procedure.
EIG1, EIG2, EIG3, EIG4, EIG5	Characteristic values for values of ℓ immediately preceding the one under consideration. They are used to calculate the starting values, labeled $A_{0\ell}^{1}$.
ENR	Vector containing either scaled or unscaled ratios of $d_n(c\|0\ell)$ coefficients. When the ratios are scaled, $ENR(I) = \alpha_{2I+IX-2}DN(I)/DN(I-1)$. When unscaled, $ENR(I) = DN(I)/DN(I-1)$.
ETEST	Constant set equal to 10^{-ND-1}. It is used in determining the convergence of two inner sums required each iteration in the Bouwkamp procedure.
FACT	Vector whose Ith element $FACT(I) = (2I-2)!/\{4^{I-1}[(I-1)!]^2\}$. FACT is calculated once for an entire computer run. It is used in evaluating the sums over n in Eq. (20).
FARG	Input parameter and step size used to generate BARG.

FTEST	Constant set equal to 10^{-NEX}.
GLIST	Vector used in the Bouwkamp variational procedure. The element GLIST(I) = $\beta_{2I+IX-2}$ from Eqs. (13) and (14).
GTEST	Constant set equal to $10^{-NEX/2}$.
H	c.
H1	Input parameter and step size used to generate desired values for c.
HL	The final value for c generated using a single set of input parameters H1, DH, and NH. That is, HL = H1 + (NH - 1)DH.
HSQ	c^2.
HTEST	Constant set equal to 10^{NEX-5}. It is used to scale the spherical Bessel functions.
IBLIM	LIM1/2 - IX.
IBLIMM	IBLIM - 1.
IIX	IX + 1.
IRIO	IW6 + 1.
IW6	$\ell/2$, truncated to an integer.
IX	ℓ - 2(IW6). This is equal to 0 for even values of ℓ and equal to 1 for odd values of ℓ.
JARG	Total number of desired values of x in the range $\lvert x\rvert \leqslant 1$.
JFLAG	Vector whose Ith element JFLAG(I) equals 0, 1, 2, 3, or 4. JFLAG(I) always equals 0 if $I \leqslant$ JARG and equals 0 or 3 if JARG $< I \leqslant$ NARG and the angular function $S_{0\ell}^{(1)}\{c, \text{BARG[KFLAG(I)]}\}$ and therefore the linear prolate function $\hat{\psi}_\ell\{c, \text{BARG[KFLAG(I)]}\}$ is calculated using only Eq. (12); JFLAG(I) equals 1 if JARG $< I \leqslant$ NARG and the function $S_{01}^{(1)}$ and therefore $\hat{\psi}_\ell$ is calculated using both Eq. (12) and Eq. (21) and choosing the best result; JFLAG(I) equals 2 if JARG $< I \leqslant$ NARG and the function $S_{01}^{(1)}$ and therefore $\hat{\psi}_\ell$ is calculated using only Eq. (21); and JFLAG(I) equals 4 if JARG $< I \leqslant$ NARG and the function $S_{01}^{(1)}$ and therefore $\hat{\psi}_\ell$ is not calculated but set equal to 0 when both expansions would provide completely inaccurate results.
JLIM	Integer greater than IW6 such that both $\lvert$DN(JLIM)$\rvert \geqslant$ CTEST and $\lvert$DN(JLIM + 1)$\rvert <$ CTEST.

JLN	Number of Bessel functions calculated for each value of x in the range $\|x\| > 1$ for a given value of c and LL. It is given by JLN = $LL + 0.0004c^2 + 12\sqrt{c} + 12$.
JMAX	Number of modified Legendre functions (BRAY) that are evaluated for values of x in the range $1 < \|x\| \leqslant 2$. For $c \leqslant 100$, JMAX is normally set equal to 294 + 2(NEX/2), where NEX/2 is truncated to an integer before multiplication by 2. The section "Parameter Ranges" contains information on when to use alternate expressions for JMAX.
JSTOR	Integer equal to the maximum number of terms required for convergence of the series used in calculating λ_ℓ and $\hat{\psi}_\ell(c, x)$. It is determined anew for each ℓ.
J1	Integer less than IW6 such that both $\|DN(J1)\| > CTEST$ and $\|DN(J1 - 1)\| \leqslant CTEST$. If no $J1 > 1$ satisfies this condition, then $J1 = 1$.
KFLAG	Vector whose Ith element KFLAG(I) equals 0 when $\|BARG(I)\| > 2$. For the first of the (NARG - JARG) values of BARG(I) such that $\|BARG(I)\| \leqslant 2$, the element KFLAG(I) = JARG + 1. For the second, KFLAG(I) = JARG + 2, etc.
L	ℓ.
LFLAG	Vector whose Ith element LFLAG(I) equals 0 when $\|BARG(I)\| > 2$. When $\|BARG(I)\| \leqslant 2$, LFLAG(I) is initially set equal to 0 but is changed to 1 when the Legendre functions are calculated for the argument BARG(I). It is used to avoid unnecessarily recalculating Legendre functions when c is changed.
LIM1	Integer equal to the largest value of the index n as given in Eqs. (12), (13), etc. that is retained in the calculations. For $\ell = 0$ it is set equal to $12\sqrt{c} + 12$. For $\ell > 0$ it is set equal to JSTOR + JSTOR + 10, where JSTOR has its value as determined during previous calculations for $\ell - 1$.
LL	Largest value of ℓ desired. It may be different for different values of c.
LMAX	Largest value of ℓ allowed. It depends on both c and NEX.
LUM	Integer measure of the degree of convergence of the Bessel function expansion for $\hat{\psi}(c, x)$. It is calculated from the expression -log |FTERM/SUM|, where FTERM is the last term taken in the series and SUM is the sum of all terms up to and including FTERM.
MACC	Vector whose Ith element MACC(I) is a measure of the number of decimal digits that are accurate in the printed value for $\hat{\psi}_\ell[c, BARG(I)]$.

MARG	Integer used two ways. First it is an input parameter specifying how many values of x in the range $\|x\| > 1$ are to be generated from a single input set of BRG1 and FARG. Second it is the total number of values of x in the range $\|x\| > 1$ that are generated using all the input sets of BRG1 and FARG.
MAT	Number of Legendre functions calculated for each value of x in the range $\|x\| \leqslant 1$. MAT is equal to $LL + 0.0004(HL)^2 + 12\sqrt{HL} + 12$, where HL is the largest value of c desired.
MFLAG	Vector whose Ith element MFLAG(I) equals 0 for I = 1 to JARG. The element MFLAG(JARG + 1) is equal to the index J of the first value BARG(J) such that $\|BARG(J)\| \leqslant 2$. The next element MFLAG(JARG + 2) is equal to the index of the second value BARG(J) such that $\|BARG(J)\| \leqslant 2$, etc., until MFLAG(NARG) is reached.
MINAC	Integer set equal to 8. It indicates the minimum number of accurate decimal digits that are desired. When the accuracy of $\hat{\psi}_\ell[c, BARG(I)]$ for $\ell > 2c/\pi$ and $\|BARG(I)\| \leqslant 2$ as calculated using the Bessel-function series falls to MINAC, the Legendre function series is used to calculate $\hat{\psi}_\ell[c, BARG(I)]$.
MUM	Integer measure of the degree of convergence of the Legendre function expansion for $\hat{\psi}_\ell(c, x)$. It is calculated from the expression $-\log \|FTERM/SUM\|$, where FTERM is the last term taken in the series and SUM is the sum of all terms up to and including FTERM.
NACC	Vector whose Ith element NACC(I) is a measure of the number of decimal digits that are accurate in the printed value for $\hat{\psi}_\ell[c, ARG(I)]$.
NARG	Integer used two different ways. First it is an input parameter specifying how many values of x in the range $\|x\| \leqslant 1$ are to be generated from a single input set of ARG1 and DARG. Second it is the total number of values of x generated in the range $\|x\| \leqslant 2$ from all the input.
ND	Number of decimal digits available in double-precision number on the computer. It equals 25 for the CDC 3800 computer at NRL and equals 16 for the TI ASC computer at NRL and for most IBM computers.
NDIG	Integer set equal to 8. It indicates the degree of convergence desired in the final series calculations of $\hat{\psi}_\ell(c, x)$. Terms are taken in the series until the relative contribution of the last term taken is less than $10^{-NDIG-2}$.

NEX	The largest exponent available for double-precision numbers on the computer. It equals approximately 307 on the CDC 3800 computer at NRL and equals approximately 75 for the TI ASC computer at NRL and for most IBM computers.
NFLAG	Vector whose Ith element NFLAG(I) equals 0 for I = 1 to JARG. For I = JARG + 1 to NARG, NFLAG(I) is equal to the lesser of JMAX or the index n such that $\lvert P_{n-1}\{BARG[MFLAG(I)]\}\rvert > 10^{NEX+ND}$ and $\lvert P_{n-2}\{BARG[MFLAG(I)]\}\rvert \leqslant 10^{NEX+ND}$.
NHOP	$2c/\pi$, truncated to an integer.
P	Doubly dimensioned array containing values of the Legendre function for all values of x in the range $\lvert x\rvert \leqslant 1$. The element $P(I, J) = P_{J-1}[ARG(I)]$.
PSI	Vector whose Ith element $PSI(I) = \hat{\psi}_\ell[c, ARG(I)]$.
RAY	Vector used in the generation of the spherical Bessel functions.
R1	$R_{0\ell}^{(1)}(c, 1)$.
SALAM	λ_ℓ times 10^{NEX}.
TTEST	Constant set equal to $10^{-NEX+ND+ND+2}$.
UTEST	Constant set equal to $10^{ND+ND+5}$.
VTEST	Constant set equal to $10^{-NEX+ND+5}$.
WTEST	1/VTEST.
YTEST	1/HTEST.

Major Computation Blocks

Descriptions of the major computation blocks in LINPRO are as follows:

Computation Block	Statement Number From	Statement Number To
Read data	1	15
Calculate both the Legendre functions for $\lvert x\rvert \leqslant 1$ and the vector FACT	51 + 1*	68
Calculate the spherical Bessel functions by subroutine SBESF	36 + 3	35

*The symbol 51 + 1 signifies statement number 51 plus one line.

Calculate the starting value $A^1_{0\ell}$ for the characteristic value $A_{0\ell}$	93	11 + 4
Generate successive corrections to obtain $A_{0\ell}$	12 + 1	27 + 4
Test the resulting value for $A_{0\ell}$ to determine whether it is correct	22 + 1	33
If $A_{0\ell}$ is incorrect, change $A^1_{0\ell}$ and return to recalculate $A_{0\ell}$	22	33 + 5
Calculate the coefficients d_n	23 + 2	83 + 3
Calculate both $R^{(1)}_{0\ell}(c, 1)$ and the normalization given by the left-hand side of Eq. (17)	83 + 4	50 + 1
Calculate λ_ℓ and scale if necessary	50 + 2	148
Calculate $\hat{\psi}_\ell(c, x)$ for $\|x\| \leqslant 1$	148 + 2 and 151 + 9	48 151 + 9
Decide whether to use Legendre functions to calculate $\hat{\psi}_\ell(c, x)$ for $1 < \|x\| \leqslant 2$	161	162 + 1
Calculate $\hat{\psi}_\ell(c, x)$ for $1 < \|x\| \leqslant 2$ by the Legendre-function expansion	191 and 151 + 9	196 151 + 9
Calculate the accuracy check for $\hat{\psi}_\ell(c, x)$ obtained using Legendre functions	151	151 + 8
Decide whether to use Bessel functions to calculate $\hat{\psi}_\ell(c, x)$ for $1 < \|x\| \leqslant 2$	94 + 3	198 + 1
Calculate $\hat{\psi}_\ell(c, x)$ for $\|x\| > 1$ by the Bessel-function expansion	94 + 2 58 + 8	57 58 + 9
Calculate the accuracy check for $\hat{\psi}_\ell(c, x)$, $\|x\| > 1$	58 + 2	58 + 6
Decide whether Legendre functions are required for $1 < \|x\| \leqslant 2$ and have not previously been calculated	58 + 10	58 + 18
Calculate Legendre functions for $1 < \|x\| \leqslant 2$	58 + 19	175
Choose the best value for $\psi_\ell(c, x)$ for $\|x\| \leqslant 2$ when both the Legendre function and the Bessel function expansions are used	61	61
Final printout	55 + 1	46.

Parameter Input

The input consists of a series of data cards:

Data Card 1: Format 3I5 — This card contains the integers NX1, NX2, and NCH. The integer NX1 is right justified in the five spaces on the card. The integer NX2 is right justified in the second five spaces, etc. The integer NX1 is the number of following data cards that specify the values of x in the range $-1 \leqslant x \leqslant 1$ for which $\hat{\psi}_\ell(c, x)$ is desired. The integer NX2 is the number of data cards (following the previous 1 + NX1 data cards) that specify the desired values of x in the range $|x| > 1$. The integer NCH is the number of data cards (following the previous 1 + NX1 + NX2 data cards) that specify the desired values of c.

Data Card 2: Format 2D20.10,I5 — This card contains an initial value of x, called ARG1, a step size for x, called DARG, and the number of values of x, called NARG, to be calculated from ARG1 and DRAG. The values of x resulting from this data card are ARG1, ARG1 + DARG, ..., ARG1 + (NARG - 1)DARG. ARG1 is contained in the first 20 spaces on the card, DARG is contained in the next 20 spaces, and NARG is given in spaces 41 through 45 (right justified).

Data Cards 3 through 1 + NX1: Format 2D20.10,I5 — Each of these data cards is identical in function and format to data card 2. They each contain an initial value ARG1 and step size DARG for generating NARG additional values in the range $-1 \leqslant x \leqslant 1$. (The integer NARG is of course reset with each new data card.)

Data Card 2 + NX1: Format 2D20.10,I5 — This data card is identical in format and similar in function to data card 2. It provides an initial value BRG1, a step size FARG, and MARG, the number of values of x to be generated from BRG1 and FARG in the range $|x| > 1$. The resulting values for x are BRG1, BRG1 + FARG, ..., BRG1 + (MARG - 1)FARG.

Data Cards 3 + NX1 through 1 + NX1 + NX2: Format 2D20.10,I5 — Each of these data cards is identical in format and function to data card 2 + NX1. They each give an initial value BRG1 and step size FARG for generating MARG additional values of x in the range $|x| > 1$.

Data Card 2 + NX1 + NX2: Format 2D20.10,2I5 — This data card contains an initial value for c, called H1, a positive step size for c, called DH, the number of values of c to be generated from H1 and DH, called NH, and the last value of ℓ desired, called LL. The values of c that result from this card are H1, H1 + DH, ..., H1 + (NH - 1)DH. LINPRO calculates $\hat{\psi}_\ell(c, x)$ for LL + 1 values of ℓ from 0 to LL.

Data Cards 3 + NX1 + NX2 through 1 + NX1 + NX2 + NCH: Format 2D20.10,2I5 — These data cards are identical in format and function to data card 2 + NX1 + NX2. Each card contains an initial value H1, a step size DH for generating NH additional values of c, and a last ℓ value LL. (NH and LL are reset with each new data card.)

21. C.W. Barnes, "Object Restoration in a Diffraction-Limited Imaging System," *J. Opt. Soc. Am.* 56, 575-578 (1966).

22. G.D. Boyd and J.P. Gordon, "Confocal Multimode Resonator for Millimeter Through Optical Wavelength Masers," *Bell System Tech. J.* 40, 489-508 (1961).

23. D.R. Rhodes, *Synthesis of Planar Antenna Sources*, Clarendon Press, Oxford, England, 1974.