SECURITY CLASSIFICATION OF THIS PAGE (When Data Entered)

REPORT DOCUMENTATION PAGE		READ INSTRUCTIONS BEFORE COMPLETING FORM
1. REPORT NUMBER NRL Report 7930	2. GOVT ACCESSION NO.	3. RECIPIENT'S CATALOG NUMBER
4. TITLE (and Subtitle) A PROGRAM TO PLOT AN ANNOTATED TRACK OR A TRACK AND BATHYMETRY OR MAGNETIC PROFILE ON A MERCATOR PROJECTION		5. TYPE OF REPORT & PERIOD COVERED Final report on one phase of a continuing NRL problem. 6. PERFORMING ORG. REPORT NUMBER
7. AUTHOR(s) Marilyn L. Blodgett and James V. Massingill		8. CONTRACT OR GRANT NUMBER(s)
9. PERFORMING ORGANIZATION NAME AND ADDRESS Naval Research Laboratory Washington, D.C. 20375		10. PROGRAM ELEMENT, PROJECT, TASK AREA & WORK UNIT NUMBERS NRL Problem S01-47 Project ZF 52-552-001; 62759N Arpa Order 1787
11. CONTROLLING OFFICE NAME AND ADDRESS Naval Material Command Via Arctic Submarine Command Naval Undersea Center San Diego, CA 92132		12. REPORT DATE February 27, 1976 13. NUMBER OF PAGES 41
14. MONITORING AGENCY NAME & ADDRESS(if different from Controlling Office)		15. SECURITY CLASS. (of this report) Unclassified 15a. DECLASSIFICATION/DOWNGRADING SCHEDULE

16. DISTRIBUTION STATEMENT (of this Report)

Approved for public release; distribution unlimited.

17. DISTRIBUTION STATEMENT (of the abstract entered in Block 20, if different from Report)

18. SUPPLEMENTARY NOTES

19. KEY WORDS (Continue on reverse side if necessary and identify by block number)

Oceanographic data
Geophysics
Profiles
Bathymetry
Magnetic surveys
Navigation
Mercator projection

20. ABSTRACT (Continue on reverse side if necessary and identify by block number)

A program has been written for plotting an annotated track or for plotting a track and the superimposed bathymetry or magnetic profile on a Mercator projection. The program reads the data (navigation, bathymetry, or magnetics) from a magnetic tape in BCD form.

The program will annotate every point or every nth point. Navigation is annotated with fix numbers, bathymetry will uncorrected fathoms, meters, or corrected meters, and magnetics with the residual magnetic intensity.

(Continued)

DD FORM 1 JAN 73 1473 EDITION OF 1 NOV 65 IS OBSOLETE
S/N 0102-014-6601

(Continued)

The profile series is plotted perpendicular to the track, using uncorrected fathoms or meters for bathymetry and residual magnetic intensity for magnetics.

The program was written in Fortran IV for use on a CDC 3800 computer; however, the program can be converted to run on other systems with little difficulty.

CONTENTS

1.0 IDENTIFICATION 1

2.0 PURPOSE 2

3.0 USAGE 3

4.0 METHOD OF ALGORITHM 5

5.0 SOURCE LANGUAGE LISTING 5

6.0 COMPARISON 5

7.0 TEST METHOD AND RESULTS 5

8.0 REMARKS 5

APPENDIX A — Sample Input Data Records 6

APPENDIX B — Deck Assembly 9

APPENDIX C — Sample Profiles 15

APPENDIX D — Flow Chart 16

APPENDIX E — Source Language Listing 17

A PROGRAM TO PLOT AN ANNOTATED TRACK OR A TRACK AND BATHYMETRY OR MAGNETIC PROFILE ON A MERCATOR PROJECTION

1.0 IDENTIFICATION

1.1 Title

A Program to Plot an Annotated Track or a Track and Bathymetry or Magnetic Profile on a Mercator Projection.

1.2 Identification Name

Mercator.

1.3 Classification Code

None.

1.4 RCC Identification Number

None.

1.5 Entry Points

MERCATOR.

1.6 Programming Language

Language: CDC 3600/3800 Fortran.
Routine Type: Program.
Operating System: Drum Scope 2.1.

1.7 Computer and Configuration

CDC 3800.

1.8 Contributor or Programmer

Marilyn L. Blodgett, Code 8176MB, Propagation Branch, written for the Environmental Sciences Section, Acoustics Division.

1.9 Contributing Organization

NRL — Naval Research Laboratory, Washington, D.C. 20375.

1.10 Program Availability

If supplied with a magnetic tape, the Environmental Sciences Section, Acoustics Division, will make a copy of this program.

Manuscript submitted September 3, 1975.

1.11 Verification

This program has been used and tested by the Environmental Sciences Section, Acoustics Division, for several months.

1.12 Date

May 1976.

2.0 PURPOSE

2.1 Description of the Routine

This program reads the data collected by an oceanographic or geophysical experiment from a magnetic tape and plots an annotated track or plots the track and bathymetric or magnetic value perpendicular to the track as a profile. We use the format recommended by the National Research Council of the National Academy of Sciences with one slight modification for the input data tape. There is one logical record (of 80 characters) for each data point. The different types of data (navigation, bathymetry, and magnetics) are separated by an end-of-file mark with a double end-of-file mark at the end of all the data.

Before the program reads this input tape, it reads three cards. The first card specifies the minimum and maximum latitude and longitude in degrees and minutes. The second card specifies the kind of plot desired, the number of tick marks between the meridians and parallels, the spacing between the meridians and the parallels, the height of the map to be drawn, the dates of the data on the first input tape to be considered for plotting, the actual values to be plotted, and the units per inch for plotting the bathymetric or magnetic profiles along the track. The third card defines the actual data format on the input tape (the format varies for the three types of data).

With all the required parameters defined, the program starts to read the input tape one record at a time. Each record is checked to see that the fix falls on the defined grid and that it was taken on or between the two specified dates. Only those points which meet both requirements are plotted. The program continues reading the input tape until it reads an end-of-file mark or a fix taken after the last specified date. If there are additional input tapes, the program reads them in a similar manner. The beginning and end dates for each new input tape are required on an Extra card. A maximum of four input tapes can be used. When all the input tapes have been read, the program prepares to plot the track or annotated track and, if required, prepares to plot the profiling values for either bathymetry or magnetics.

The track is plotted on a Mercator projection which is drawn exactly to scale. The grid may be blown up to any reasonable size. Since the projection is drawn exactly to scale, a mosaic can later be built of the entire area.

2.1.1 Navigation Data

The program reads the date (month and day), time (hour and whole minutes), latitude, longitude, and fix number from the input tape according to the specified format. The southern latitudes and the western longitude are preceded by a negative sign. Normally, the track is plotted in a continuous line with every nth fix marked with a square symbol and annotated with the fix number.

2.1.2 Bathymetry Data

The program reads the date (month and day), time (hour and whole minutes), latitude, longitude, and uncorrected fathoms or corrected meters from the input tape according to the specified format. The southern latitudes and the western longitudes are preceded by a negative sign. The program can convert uncorrected fathoms to uncorrected meters. If an annotated track is desired, each fix is plotted with a small plus *symbol* and annotated with uncorrected fathoms, meters, or corrected meters. If a profile is desired, the track is plotted in a continuous straight line, and the profiling series is multiplied by -1 to drop it below the track.

2.1.3 Magnetic Data

The program reads the date (month and day), time (hour, and whole minutes), latitude, longitude, and residual magnetic intensity from the input tape according to the specified format. The southern latitudes and the western longitudes are preceded by a negative sign. If an annotated track is desired, each fix is plotted with a small plus *symbol* and annotated with the residual magnetic intensity. If a profile is desired, the track is plotted in a continuous straight line, and the profiling series is residual magnetic intensity.

2.2 Problem Background

This program allows the researcher to plot vast numbers of bathymetric and/or magnetic data on a Mercator chart. There are two ways of plotting the data: plot an annotated track (data value plotted according to geographical coordinates) or plot a profile of the data using the track as a reference point.

3.0 USAGE

3.1 Calling Sequence or Operation Procedure

Not applicable.

3.2 Arguments, Parameters, and/or Initial Conditions

Not applicable.

3.3 Space Required (Decimal and Octal)

3.3.1 Unique Storage:
7074 octal (3644 decimal) locations exclusive of system library functions.

3.3.2 Common Blocks:
/MAPSYS/, /INPT/, /RATCOM/, /CHTLBL/.

3.3.3 Temporary Storage:

None.

3.4 Messages and Instructions to the Operator

None.

3.5 Error Return, Messages, and Codes

Insufficient information to complete plot.

3.6 Informative Messages to the User

None.

3.7 Input

The actual format of the data on the input tape, the kind of plot desired, and the map specifications are read in via input cards. The track and the actual data to be annotated or profiled is read in via magnetic tape on logical units 10 through 13. Appendix A presents samples of our data formats on the input tape. Appendix B is a complete description of the input deck setup.

3.8 Output

The program prints on the standard printer (logical unit 61) the data format, chart parameters, and the actual number of points plotted for the track and profile. It writes the plotting instructions on a magnetic tape (logical unit 40). Appendix C presents sample profiles.

3.9 Formats

Appendix B describes the program deck structure.

3.10 External Routines and Symbols

SKIPFILE, PLOT, SQRTF, SINF, LOGF, COSF, TANF, ATANF, ACOSF, NUMBER, SYMBOL, XMODF.

3.11 Timing

The time required depends on the size of the grid and the number of data read and plotted.

3.12 Accuracy

The grid is reproduced exactly to scale.

3.13 Cautions to Users

None.

3.14 Program Deck Structure

Appendix B describes the program deck structure.

3.15 References — Literature

N. Maddage and S.J. Kozloski, Program Seachart, Naval Research Laboratory, Washington, D.C. M.L. Blodgett and J.V. Massingill, "A Program for Storing Oceanographic Data on Magnetic Tape," NRL Report 7861, March 1975.

4.0 METHOD OF ALGORITHM

Not applicable.

5.0 FLOW CHART AND/OR SOURCE LANGUAGE LISTING

The flow chart and listing are given in Appendixes D and E.

6.0 COMPARISON

No other known programs are available for comparison.

7.0 TEST METHOD AND RESULTS

The program has been used and tested successfully on a Calcomp Plotter.

8.0 REMARKS

None.

APPENDIX A
Sample Input Data Record

NAVIGATION RECORD

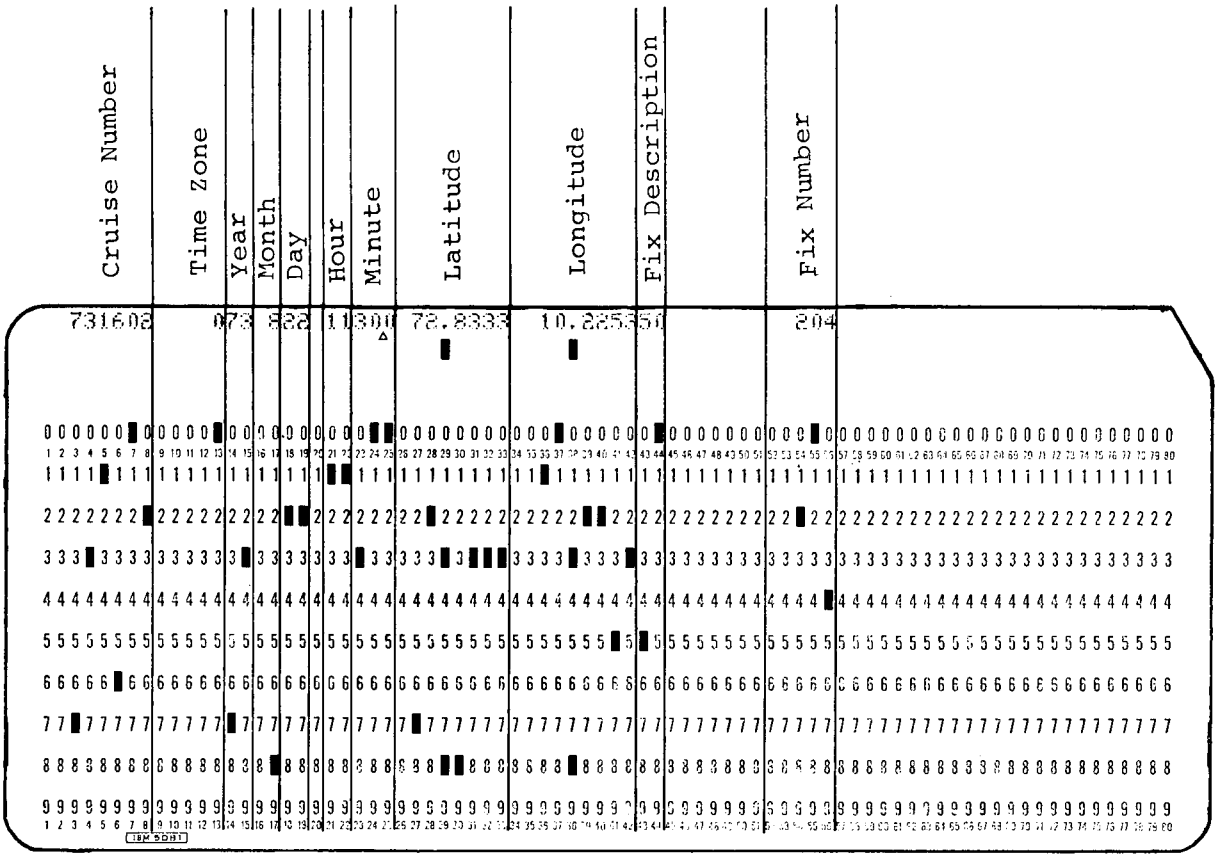

[Δ]Implies a decimal point.

BATHYMETRY RECORD

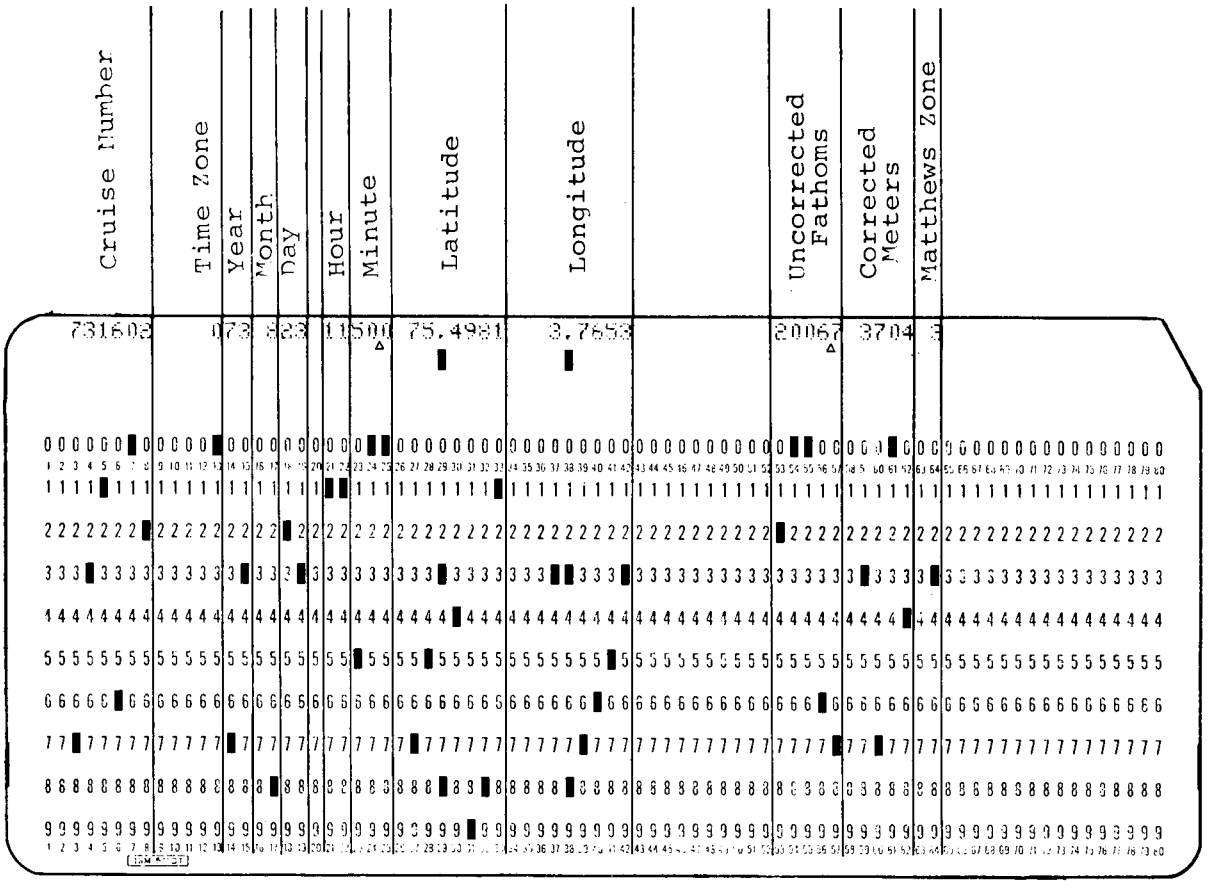

[Δ]Implies a decimal point.

MAGNETICS RECORD

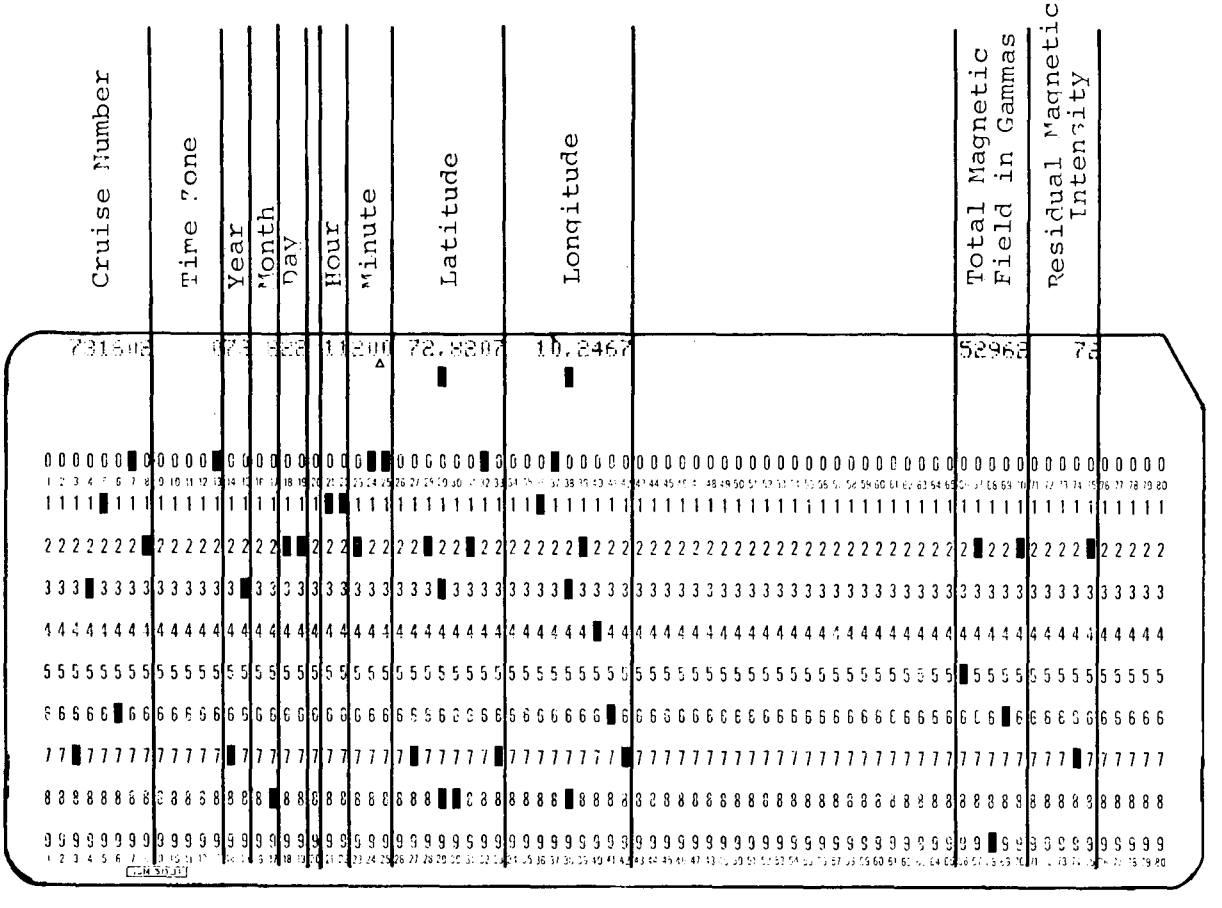

[Δ]Implies a decimal point.

APPENDIX B
Deck Assembly for Program Mercator

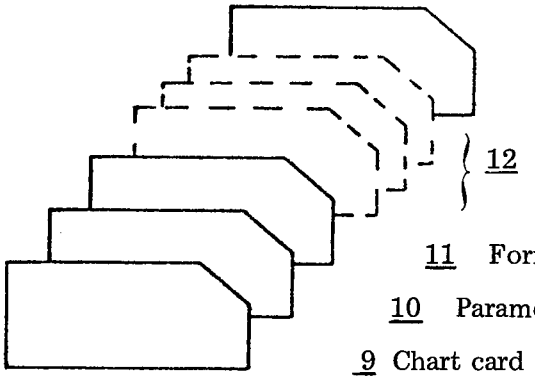

13 End of File card

12 Extra card (one for each additional input tape)

11 Format card

10 Parameter card

9 Chart card

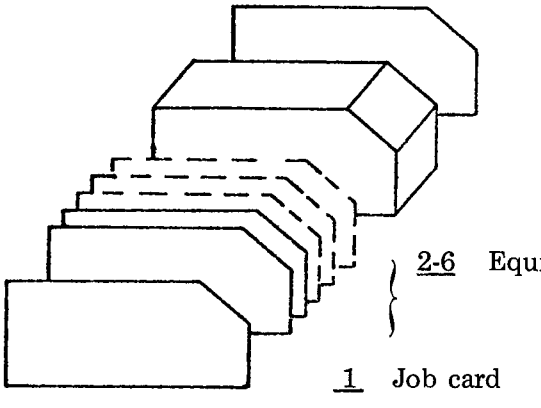

8 Run card

7 Program Mercator (binary deck)[2]

2-6 Equip cards[1] (logical units 10, 11, 12, 13, and 40)

1 Job card

---

[1]The program uses a scratch tape on logical unit 05, but no Equip card is required, since the drum is used.

[2]If the Fortran source deck is used instead of the binary deck, a Fortran card is required after the Equip card. In addition, a Scope card and Load card must follow the source deck.

Number	Card Title	Column Number	Description
1	Job	1-21	7/9 JOB, Charge No., ID No., time. See page 2-2 of the 3600/3800 Computer System Drum Scope Manual.
2-6	Equip	1-18	7/9 EQUIP, 40=**, WO, LO 7/9 EQUIP, 10=**, RO, HI 7/9 EQUIP, 11=**, RO, HI 7/9 EQUIP, 12=**, RO, HI 7/9 EQUIP, 13=**, RO, HI 10, 11, 12, 13, 40 = logical unit numbers. RO = read only. LO = low density. WO = write only. HI = high density. See page 2-3 of the 3600/3800 Computer System Drum Scope Manual.
7	Program	Deck of Mercator	This is the main program with associated subroutines. If the Fortran source deck is used instead of the binary deck, a Fortran card is required after the Equip card. The Fortran card reads 7/9 FTN, L, R, X. In addition a Scope card with SCOPE starting in Column 10 and a Load card must follow the source deck.
8	Run	1-13	7/9 RUN, T, P, R, M, D T = time limit in minutes. P = maximum number of print or write operations R,M,D may be left blank. See page 2-15 of the 3600/3800 Computer System Drum Scope Manual.
9	Chart	1-5	28.0 Degree portion of southernmost latitude for the chart (28° 30′N). (If the latitude were 28° 30′S, a minus sign would precede 28.0.)
		6-10	30.0 Minute portion of southernmost latitude (28° 30′N).

Number	Card Title	Column Number	Description
		11-15	35.0 Degree portion of northernmost latitude. (A minus sign would indicate the latitude is south.)
		16-20	0.0 Minute portion of northernmost latitude. (Both degrees and minutes must be specified in decimal form even if a zero value is assigned.)
		21-26	-45.0 Degree portion of westernmost longitude for the chart (45°10′W). (The minus sign indicates the longitude is west.)
		27-30	10.0 Minute portion of westernmost longitude.
		31-36	-40.0 Degree portion of easternmost longitude (40°25′W).
		37-40	25.0 Minute portion of easternmost longitude.
10	Parameter	1-5	4000 (right justified). Units per inch for plotting values along the track. In this example a value of 4000 gammas would be plotted 1 inch above the track. The remainder of the profiling data would be scaled accordingly.
		7-8	60 Number of tick marks between the meridians.
		9-10	40 Number of tick marks between the parallels.

Number	Card Title	Column Number	Description
		12	0, 1, or 2 0 = every fix will be plotted with a + symbol and annotated. 1 = the track will be plotted in a continuous line and every nth fix (columns 20-24) will be marked with a small square and annotated. 2 = plot value series as a profile perpendicular to the track.
		14	0 or 1 0 = use value as read from the input tape. 1 = read uncorrected fathoms from the input tape and convert to uncorrected meters.
		16	0 or 1 0 = do not multiply the profiling series by -1. 1 = multiply the profiling series by -1 to drop it below the track.
		19	0, 1, or 2 Number of files to be skipped over on the first input tape. There are a maximum of three files on our Geodata tapes.
		20-24	12 (right justified). This value designates the n of the nth fix to be annotated. This value is specified only if there is a 1 in column 12.
		26-30	5.0 Degree portion of the interval between the meridians.
		31-35	0.0 Minute portion of the interval between the meridians. (Both degrees and minutes must be specified in decimal form even if a zero value is assigned.) In this example the spacing will be at 5-degree intervals.

Number	Card Title	Column Number	Description
		36-40	10.0 Degree portion of the interval between the parallels.
		41-45	0.0 Minute portion of the interval between the parallels. In this example the spacing will be at 10-degree intervals.
		56-60	9.00 Physical height of the chart to be drawn.
		64	1, 2, 3, or 4 Number of input tapes, with the maximum being four.
		65-72	02250330 Date and time of the first data point to be read and plotted from the first input tape. Columns 65 and 66 are for the month, columns 67 and 68 are for the day, columns 69 and 70 are for the hour, and columns 71 and 72 are for the minutes.
		73-80	02280830 Date and time of the last data point to be read and plotted from the first input tape. All data between the date and time of the first data point and of the last data point will be read and plotted if it falls on the defined chart.
11	Format	1-?	(15XI4, 1XI4, 1XF8.4, F9.4, 10XF5.1) This format should be replaced by the desired input format. The format must be enclosed in parentheses and left-justified. Via this format the program reads the date (month and day), time (hour and whole minutes), latitude, longitude, and value to be annotated or profiled (fix number of navigation, uncorrected fathoms or corrected meters

Number	Card Title	Column Number	Description
			for bathymetry, and residual magnetic intensity for magnetics). The formats for reading the three data types on our input tapes are: • Navigation (15XI4, 1XI4, 1XF8.4, F9.4, 9XF5) • Bathymetry — uncorrected fathoms (15XI4, 1XI4, 1XF8.4, F9.4, 10XF5.1) • Magnetics (15XI4, 1XI4, 1XF8.4, F9.4, 28XF5).
12	Extra	1-4	0, 1, or 2 Number of files to be skipped over on the second input tape. There must be an Extra card for each additional input tape. Since there is a maximum of four input tapes, the maximum number of Extra cards is three.
		5-12	02250330 Date and time of the first data point to be read and plotted from the second input tape. The dates for the first input tape are on the Map Parameter Card.
		13-20	02280830 Date and time of the last data point to be read and plotted from the second input tape.
13	End of File		Terminates the run.

APPENDIX C
Sample Profiles

BATHYMETRY PROFILE

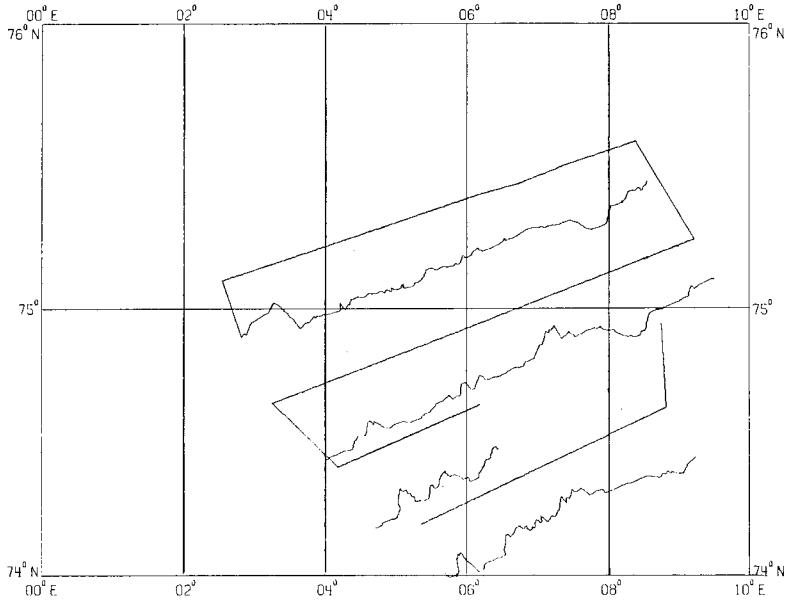

MAGNETIC PROFILE

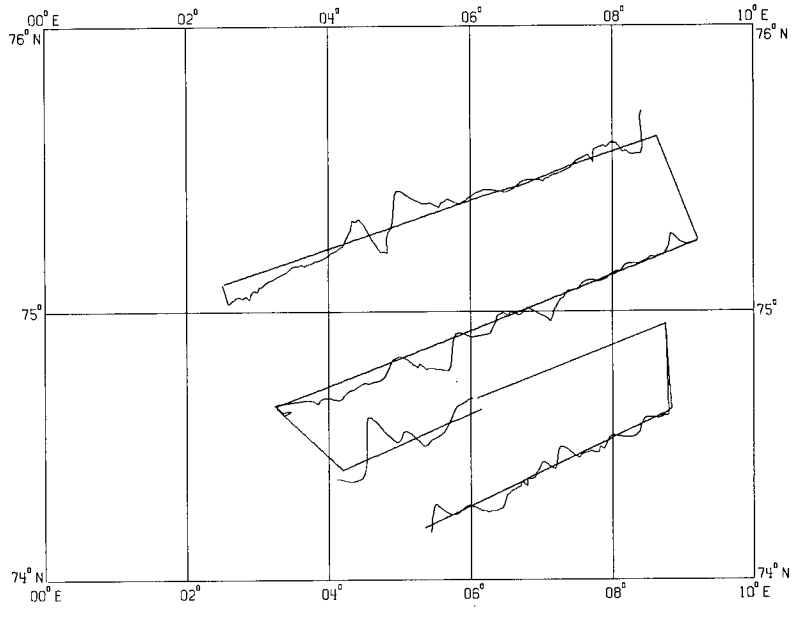

APPENDIX D
Flow Chart

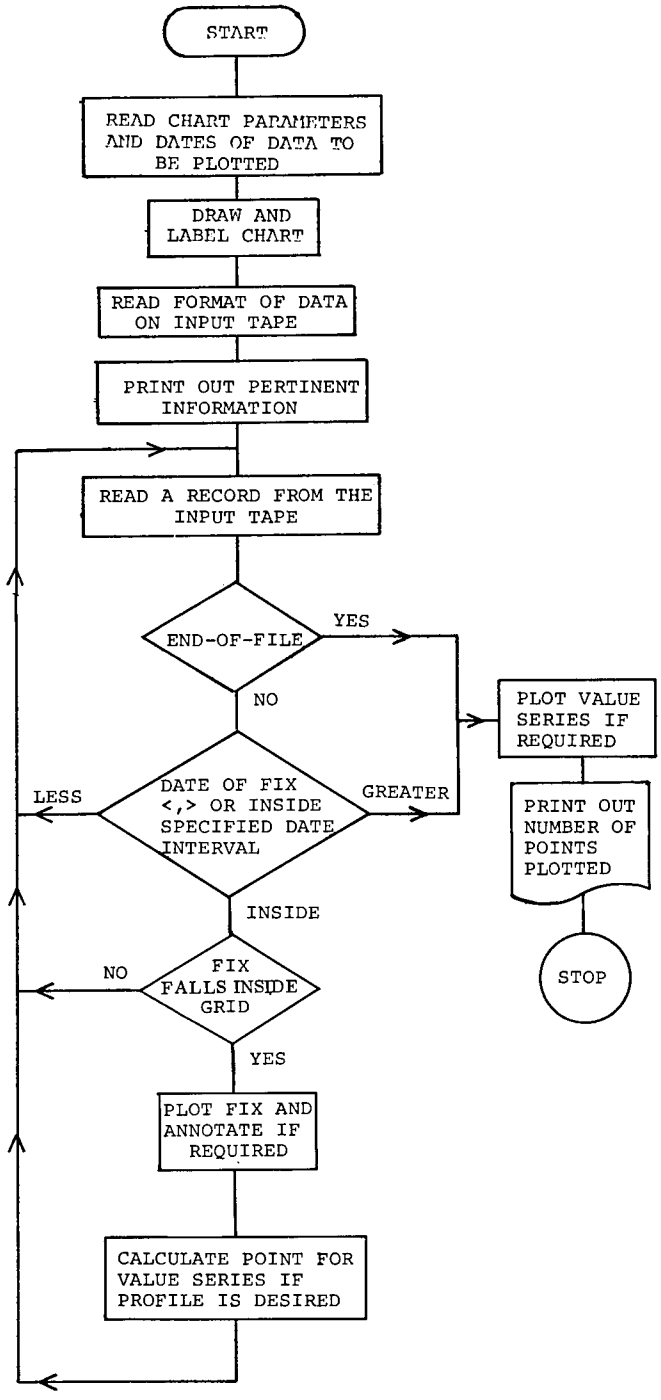

APPENDIX E
Source Language Listing

```
      PROGRAM MERCATOR
      REAL LAT
      REAL LATMIN,LATMAX,LONGMIN,LONGMAX
      DIMENSION IBUF(254),ANOM(2),HEAD(2),S(2)
      DIMENSION IPM(10)
      COMMON/MAPSYS/    CORR(4),     RR,          DEL,         ACHT,          800
     1                  IPR,         XMIN,        YMIN,        XMAX,          900
     2                  YMAX,        MP,          ICR,         IA,           1000
     3                  RAHI,        RAWI                                     1100
C                                                                             1200
      COMMON/INPT/ALATND,  ALATNM,  ALATNS,  ALATXD,  ALATXM,  ALATXS,       1300
     1            ALOGND,  ALOGNM,  ALOGNS,  ALOGXD,  ALOGXM,  ALOGXS,       1400
     2            MPC,     KOMP,    WIDTH,   HITE,    DEGDVD,  DEGDVM,        1500
     3            DEGDVS,  NTIC,    TICLGT,  ALTMD(5),ALTMM(5),ALTMS(5),     1600
     4            ALNMD(5),ALNMM(5),ALNMS(5),ALTSD(5),ALTSM(5),ALTSS(5),     1700
     5            ALNSD(5),ALNSM(5),ALNSS(5),AR(5),   VR(5)                  1800
C                                                                             1900
      COMMON/RATCOM/NAVSYS,   NORATE,   RATID(5), CDLY(5),  RATINC(5),       2000
     1    ARAT(5),  PHIM(5),  ALAM(5),  PHIS(5),  ALAS(5),  KNTMAX,          2100
     2    KNT,      BPS,      NR,       DELT,     BSLN(5)                     2200
C                                                                             2300
      COMMON/CHTLBL/MINMER,   MNMER(50),[illegible],   MINPAR,   MNPAR(50),  2400
     1              MAXPAR,   NC,       [illegible],   NTC,      NLY,        2500
     2              NY(50),   NRY,      XL(50),        YK(50),   KXAXIS,     2600
     3              KYAXIS,   IYN,      NI,            XTIB,     YTIB,       2700
     4              LYN                                                      2800
      COMMON/FIXGRAT/DCL,NTIX
C                                                                             2900
      LP = 0                                                                  3000
      IFIRST=0
      KOUNT=1
      IA = 1                                                                 83200
      IPR = 61                                                               83300
      ICR = 60                                                               83400
      IEX=0
      IT=10
      IUP=3
      ALATNS=0.0
      ALATXS=0.0
      ALOGNS=0.0
      ALOGXS=0.0
      DEGDDS=0.0
      DEGDVS=0.0
      PI=3.14159
      KOMP=1
      NAVSYS=1
      NORATE=0
      IYN=0
      LYN=1
      MPC=1
C     READ IN RANGE OF CHART                                                 83500
      READ(60,101)ALATND,ALATNM,ALATXD,ALATXM,ALOGND,ALOGNM,ALOGXD,
     1ALOGXM
 101  FORMAT(4F5.1,F6.1,F4.1,F6.1,F4.1)
 10   READ(ICR,601)GINCH,NTIC,NTIX,ILINE,IUSE,IMULT,ITAPE,IPT,DEGDVD,DEGDVM,DEGD
     2DVM,
```

```
     .1DEGDDD,DEGDDM,HITE,NOTP,JUDY1,ITM1,JUDY2,ITM2
 601 FORMAT(F5.1X,5I2,I3,I5,1XF5.1,3F5.1,10XF5.2,5I4)
     DO 777 IX=1,ITAPE
 777 CALL SKIPFILE(IT)
     GO TO(20,800)IA                                                    3200
 20  RR=0.9966329966
     NS = 8                                                             75300
C**** CONVERT DEGREES, MINUTES AND SECONDS TO RADIANS                   75400
     CALL DTOR(ALATND,ALATNM,ALATNS,CORR(1))                            75500
     CALL DTOR(ALATXD,ALATXM,ALATXS,CORR(2))                            75600
     CALL DTOR(ALOGND,ALOGNM,ALOGNS,CORR(3))                            75700
     CALL DTOR(ALOGXD,ALOGXM,ALOGXS,CORR(4))                            75800
     CALL DTOR(DEGDVD,DEGDVM,DEGDVS,DEL)                                75900
     CALL DTOR(DEGDDD,DEGDDM,DEGDDS,DDL)
     CALL PLOTS(IEUF,254,40,29)
     CALL PLOT(0.0,0.0,3)
C**** MERCAT IS THE SUBROUTINE NAME FOR MERCATOR PROJECTION              3700
 100 CALL MERCAT                                                        3800
     IF(WIDTH.LE.0.0.OR.HITE.LE.0.0)GO TO 800                           3900
 700 CALL GRATIE                                                        6200
     IF(NTIC)715,715,710
 710 CALL TICX
 715 IF(NTIX)26,26,717
 717 CALL TICY
 26  CALL CHLABEL
 25  M=1
     AMIN=0.0
     SEC=0.0
     MINUS=40000000000000000B
     XLAM=ABSF(ALATNM)
     KOY=ALATND.AND.MINUS
     IF(KOY.EQ.MINUS)27,28
 27  LATMIN=ALATND-XLAM/60.0
     GO TO 29
 28  LATMIN=ALATND + XLAM/60.0
 29  XLAM=ABSF(ALATXM)
     KOY=ALATXD.AND.MINUS
     IF(KOY.EQ.MINUS)30,31
 30  LATMAX=ALATXD-XLAM/60.0
     GO TO 32
 31  LATMAX=ALATXD + XLAM/60.0
 32  XLAM=ABSF(ALOGNM)
     KOY=ALOGND.AND.MINUS
     IF(KOY.EQ.MINUS) 33,34
 33  LONGMIN=ALOGND-XLAM/60.0
     GO TO 35
 34  LONGMIN=ALOGND + XLAM/60.0
 35  XLAM=ABSF(ALOGXM)
     KOY=ALOGXD.AND.MINUS
     IF(KOY.EQ.MINUS)36,37
 36  LONGMAX=ALOGXD-XLAM/60.0
     GO TO 38
 37  LONGMAX=ALOGXD+ XLAM/60.0
 38  READ(60,1000)IFM
 1000 FORMAT(10A8)
     WRITE(61,555)IFM
 555 FORMAT(*  DATA FORMAT ...*,10A8)
     WRITE(61,1010)
 1010 FORMAT(1H0,16HCHART PARAMETERS)
     WRITE(61,1011)LATMIN,LATMAX
 1011 FORMAT(1H ,20HSOUTHMOST LATITUDE  ,F10.2,10X20HNORTHMOST LATITUDE
    1 ,F10.2)
     WRITE(61,1012)LONGMIN,LONGMAX
```

```
1012 FORMAT(1H ,20HWESTMOST LONGITUDE  ,F10.2,10X20HEASTMOST LONGITUDE
    1 ,F10.2)
     MM=3
     IGP=2
7400 READ(IT,IFM)IDAY,ITIME,RLAT,RLONG,ANOMAL
     IF(IOCHECK,IT)7400,7051
7051 IF(EOF,IT)1002,1001
7401 IUP=3
     GO TO 7400
1001 IF(IDAY.LT.JLDY1) GO TO 7401
     IF(IDAY.GT.JLDY2) GO TO 1002
     IF(IDAY.EQ.0) GO TO 1002
     IF(IDAY.EQ.JLDY1.AND.ITIME.LT.ITM1) GO TO 7401
     IF(IDAY.EQ.JLDY2.AND.ITIME.GT.ITM2)GO TO 1002
     IF(RLAT.LT.LATMIN) GO TO 7401
     IF(RLAT.GT.LATMAX) GO TO 7401
     IF(RLONG.LT.LONGMIN) GO TO 7401
     IF(RLONG.GT.LONGMAX) GO TO 7401
     ITRAK=ITRAK + 1
     CALL DTOR(RLAT  ,AMIN,SEC,RRLAT)
     CALL DTOR(RLONG ,AMIN,SEC,RRLONG)
     CALL MERCTR(C,ACMT,RR,RRLAT,RRLONG,XDIM,YDIM)
     IF(IUSE.EQ.1)609,610
609  ANOMAL=ANOMAL+1.8288
610  IF(IMULT.EQ.1)611,608
611  ANOMAL=-ANOMAL
608  IF(IFIRST)8001,8000,8001
8000 XLAST=XDIM
     YLAST=YDIM
     S(1)=XDIM
     S(2)=YDIM
     IFIRST=1
     CALL PLOT(XDIM,YDIM,3)
8001 ANOM(1)=ANOM(2)
     ANOM(2)=ANOMAL
     IF(IFIRST.EQ.1) 503,504
503  XDIFF=XDIM-S(1)
     YDIFF=YDIM-S(2)
     IFIRST=2
     GO TO 15
504  XDIFF=(XDIFF + (XDIM-S(1)))/2
     YDIFF=(YDIFF + (YDIM - S(2)))/2
15   HEAD(2)=ATAN2(YDIFF,XDIFF)
     IF(HEAD(2).LT.0)HEAD(2)=2*PI+HEAD(2)
     IF(0..LE.HEAD(2))411,408
411  IF(HEAD(2).LE.PI/2)407,408
407  ISIGN=1
     GO TO 23
408  IF(3.*PI/2..LT.HEAD(2))412,410
412  IF(HEAD(2).LT.2.*PI)409,410
409  ISIGN=1
     GO TO 23
410  ISIGN=-1
23   XONE=S(1)+ISIGN*ANOM(1)*SIN(HEAD(2))/GINCH
     XTWO=S(2)+ISIGN*ANOM(1)*COS(HEAD(2))/GINCH
     IF(ILINE.EQ.2) 605,606
605  WRITE(05,700) XONE,XTWO,IUP
700  FORMAT(2F10.4,I1)
```

```
606   S(1)=XDIM
      S(2)=YDIM
      HEAD(1)=HEAD(2)
      CALL ANGAN0(XDIM,XLAST,YDIM,YLAST,ANG)
      CALL FIXAN0(XDIM,YDIM,ANG,AN0MAL,K0UNT,ILINE,IPT,IUP)
      K0UNT=K0UNT + 1
      XLAST=XDIM
      YLAST=YDIM
      GO TO 7400
1002  IEX=IEX + 1
      REWIND IT
      IF(N0TP.EQ.IEX) GO TO 999
      IT=IT + 1
      READ(ICR,997)ITAPE,JUDY1,ITM1,JUDY2,ITM2
997   FORMAT(5I4)
      DO 998 IX=1,ITAPE
998   CALL SKIPFILE(IT)
      MM=3
      I0R=2
      IUP=3
      GO TO 7400
999   IF(ILINE.EQ.2)607,800
607   REWIND 05
1003  READ(05,700)X0NE,XTW0,IUP
      IF(I0CHECK.05)1003,508
508   IF(E0F.05)800,801
801   IAN0M=IAN0M + 1
      IF(IFIRST.EQ.2) 505,506
505   CALL PL0T(X0NE,XTW0,3)
      IFIRST=3
506   CALL PL0T(X0NE,XTW0,IUP)
      GO TO 1003
800   CALL PL0TS(0,0)
      CALL ST0PPL0T
      WRITE(61,1020)ITRAK
1020  FORMAT(1H0,15HPROGRAM PLOTTED, I8,5X19HFIXES FOR THE TRACK)
      IF(ILINE.NE.2) GO TO 1015
      WRITE(61,1021)IAN0M
1021  FORMAT(1H0,15HPROGRAM PLOTTED,I8,5X22HPOINTS FOR THE PROFILE)
1015  STOP
      END
```

```
                                        IDENT     MERCATOR
PROGRAM LENGTH                  01743
ENTRY POINTS     MERCATOR       00565
BLOCK NAMES
                 MAPSYS         00021
                 INPT           00133
                 RATCOM         00064
                 CHTLBL         00473
                 FIXORAT        00002
EXTERNAL SYMBOLS
                 QBGENTRY
                 THEND,
                 Q1C04100
                 QBGSTOPS
                 QBGDICT,
                 SKIPFILE
                 DTCR
                 PLOTS
                 PLOT
                 MERCAT
                 GRATIE
                 TICX
                 TICY
                 CHLABEL
                 MERCTR
                 ANGANG
                 FIXANG
                 STOPPLOT
                 ATAN2
                 SINF
                 COSF
                 QBGIFEOF
                 QBGIFIOC
                 REW,
                 TSW,
                 STW,
                 SUG,
                 SLI,
                 GNSINGL
   00450 SYMBOLS
```

```
      SUBROUTINE GRATIE
C
C*****************************************************************
C *
C * THIS SUBROUTINE STORES VALUES IN AN ARRAY THAT ARE USED FOR PLOTTING
C * BORDER AND GRATICULE FOR A MERCATOR AND INVERSE MERCATOR PROJECTION
C * CHART,  NOTE, SEE DOCUMENTATION FOR EXPLANATION OF INVERSE MERCATOR,
C *
C*****************************************************************
C
      COMMON/MAPSYS/    CORR(4),      RR,           DEL,          ACHT,
     1                  IPR,          XMIN,         YMIN,         XMAX,
     2                  YMAX,         MP,           ICR,          IA,
     3                  RAHI,         RAWI
C
      COMMON/INPT/ALATND,  ALATNM,  ALATNS,  ALATXD,  ALATXM,  ALATXS,
     1            ALOGND,  ALOGNM,  ALOGNS,  ALOGXD,  ALOGXM,  ALOGXS,
     2            MPC,     KOMP,    WIDTH,   HITE,    DEGDVD,  DEGDVM,
     3            DEGDVS,  NTIC,    TICLGT,  ALTMD(5),ALTMM(5),ALTMS(5),
     4            ALNMD(5),ALNMM(5),ALNMS(5),ALTSD(5),ALTSM(5),ALTSS(5),
     5            ALNSD(5),ALNSM(5),ALNSS(5),AR(5),   VR(5)
      COMMON/FIXGRAT/DDL,NTIX
C
C==================================BORDER==============================
C
      ONEDEG = 3.1415926535/180.0
      CALL PLOT(XMIN,YMIN,3)
      CALL PLOT(XMAX,YMIN,2)
      CALL PLOT(XMAX,YMAX,2)
      CALL PLOT(XMIN,YMAX,2)
      CALL PLOT(XMIN,YMIN,2)
      IF(DEL)900,900,100
  100 GO TO(110,110,910)MP
  110 LK = 3
      KL = 1
      NTRY = -1
  120 IF(DEL.LT.ONEDEG)NTRY = 1
      TEMP = CORR(LK)/DEL
      ITEMP = TEMP*0.0001
      DIFF = ABSF(TEMP-ITEMP)
      AINCR = DEL
      IF(DIFF.LT.DEL/20.0)GO TO 140
      IF(CORR(LK).LT.0.0)GO TO 130
      AINCR = DEL*(1.0-DIFF)
      GO TO 140
  130 AINCR = DEL*DIFF
  140 ALCHK = CORR(LK+1)-AINCR/4.0
      GO TO(150,160)KL
  150 ALONG = CORR(3)+AINCR
      ISB = 1
      GO TO 170
  160 ALAT = CORR(1)+AINCR
      ISB = 3
  170 NP = 3
      ISW = 1
      KSW = 1
```

```
      GO TO(180,190)KL                                                  65500
180   CALL MERCTR(C,ACHT,RR,CORR(ISB),ALONG,XX,YY)
      CALL PLOT(XX,YY,NP)
      JSW = NP-1                                                        65800
      GO TO (185,200)JSW                                                65900
185   CALL CHFOLB(ALONG,XX,NTRY)                                        66000
      ALONG = ALONG+DEL                                                 66100
      IF(ALONG.LT.ALCHK)GO TO 200                                       66200
      LK = 1                                                            66300
      KL = 2                                                            66400
      NTRY = 2                                                          66500
      GO TO 220
190   CALL MERCTR(C,ACHT,RR,ALAT,CORR(ISB),XX,YY)
      CALL PLOT(XX,YY,NP)
      JSW = NP-1                                                        66900
      GO TO(195,200)JSW                                                 67000
195   CALL CHFOLB(ALAT,YY,NTRY)                                         67100
      ALAT = ALAT+DEL                                                   67200
      IF(ALAT.GT.ALCHK)GO TO 900                                        67300
200   IF(NP.NE.3)GO TO 210                                              67400
      ISB = ISB*KSW                                                     67500
      KSW = -1*KSW                                                      67600
210   ISW = -1*ISW                                                      67700
      NP = NP*ISW                                                       67800
      GO TO(180,190)KL                                                  67900
220   STDEL=DEL
      DEL=DDL
      IF(DEL)900,900,120
900   CALL PLOT(XMIN,YMIN,3)
910   DEL=STDEL
      RETURN
      END                                                               71400
```

```
                                        IDENT     GRATIE
PROGRAM LENGTH                  00321
ENTRY POINTS      GRATIE        00003
BLOCK NAMES
                  MAPSYS        00021
                  INPT          00133
                  FIXGRAT       00002
EXTERNAL SYMBOLS
                  01C10100
                  01C03100
                  08CDICT,
                  PLOT
                  MERCTR
                  CHFOLB
   00163 SYMBOLS
```

```
      SUBROUTINE CHSYM(LABEL,XDIM,YDIM,NCHAR,JSUB)
C
      DATA(HH = 0.07),  (W = 0.08),  (H = 0.14),  (S = 0.04),
C
      ANC = 3.0
      IGO = XABSF(NCHAR)-JSUB
      GO TO(10,20,50,10,20)IGO
   10 ANC = ANC-1.0
   20 CALL SYMBOL(XDIM,YDIM,H,LABEL,0.0,8)
      X2 = XDIM+W*ANC+S*(ANC-1.0)+0.03
      YH = YDIM+H
      IF(NCHAR.GT.0)GO TO 30
      X3 = X2
      GO TO 40
   30 CALL SYMBOL(X2,YH,HH,1H0,0.0,1)
      IF(NCHAR.LT.5)GO TO 50
      X3 = X2+3.0*(W+S)
   40 CALL SYMBOL(X3,YH,HH,1H/,0.0,1)
   50 RETURN
      END
```

```
                                    IDENT     CHSYM
PROGRAM LENGTH                00174
ENTRY POINTS     CHSYM        00011
EXTERNAL SYMBOLS
                 QBCDICT,
                 SYMBOL
   00063 SYMBOLS
```

```
      SUBROUTINE BCDCON(FLPTD,FLPTM,BCD,NOCH,NE)
      DATA(IBLNK = 60606060606060608),  (NOR = 45B),  (ISOU = 62B),
     1    (IEAS = 25B),  (IWES = 66B)
      DIMENSION LTR(10)
C
C....
      NEWS = XABSF(NE)
      LPTD = ABSF(FLPTD)
      LPTM = FLPTM
      IF(NE.GT.0)GO TO 50
      IF(LPTM.NE.0)GO TO 50
      NOCH = 5
      ICAR = LPTD
      GO TO 60
   50 NOCH = 8
      ICAR = LPTD*1000+LPTM
   60 IF(LPTD.LT.100)NOCH = NOCH-1
      DO 5 LZ=1,NOCH
    5 LTR(LZ) = 0
      NCHAR = NOCH-2
      CALL BULAB(ICAR,NCHAR,LTR(1))
      KK = NOCH-1
      DO 10 JJ=KK,8
   10 LTR(JJ) = IBLNK
      IF(NOCH.GT.6)LTR(NOCH-4)=IBLNK
      GO TO(20,30)NEWS
   20 KOMP = IEAS
      IF(FLPTD.LT.0.0)KOMP = IWES
      GO TO 40
   30 KOMP = NOR
      IF(FLPTD.LT.0.0)KOMP = ISOU
   40 LTR(NOCH) = KOMP
      CALL APACK(NOCH,LTR(1),BCD)
      RETURN
      END
```

```
PROGRAM LENGTH                    IDENT     BCDCON
ENTRY POINTS     BCDCON     00276
EXTERNAL SYMBOLS          00022
                 01010100
                 08CDICT,
                 BULAB
                 APACK
   00120 SYMBOLS
      SUBROUTINE CENTR(MC,DLOC,DTLL)
      COMMON/CHTLBL/MINMER,   MNMER(50),MAXMER,   MINPAR,   MNPAR(50),
     1              MAXPAR,   NC,       NNC(50),  NTC,      NLY,
     2              NY(50),   NRY,      XL(50),   YK(50),   KXAXIS,
     3              KYAXIS,   IYN,      NI,       XTIB,     YTIB,
     4              LYN
C
      DATA(WID = 0.08),  (SP = 0.04)
C
      DTLL = (WID+SP)*MC-SP
      DLOC=DTLL*.5
      RETURN
      END
```

```
                                        IDENT     CENTR
PROGRAM LENGTH                  00064
ENTRY POINTS      CENTR         00005
BLOCK NAMES
                  CHTLBL        00473
EXTERNAL SYMBOLS
                  01C04100
                  08GDICT,
   00052 SYMBOLS


      SUBROUTINE CHLABEL                                                22600
      COMMON/MAPSYS/     CORR(4),      RR,           DEL           ACHT,   22700
     1                   IPR,          XMIN,         YMIN,         XMAX,   22800
     2                   YMAX,         MP,           ICR,          IA,     22900
     3                   RAWI,         RAWI                                23000
      COMMON/INPT/ALATND,  ALATNM,  ALATNS,  ALATXD,  ALATXM,  ALATXS,     23100
     1            ALOGND,  ALOGNM,  ALOGNS,  ALOGXD,  ALOGXM,  ALOGXS,     23200
     2            INOTUSE(79)                                             23300
      COMMON/CHTLBL/MINMER,  MNMER(50),   MAXMER,  MINPAR,  MNPAR(50),    23400
     1              MAXPAR,  NC,          NNC(50), NTC,     NLY,          23500
     2              NY(50),  NRY,         XL(50),  YK(50),  KXAXIS,       23600
     3              KYAXIS,  IYN,         NI,      XTIB,    YTIB,         23700
     4              LYN                                                    23800
      DATA(NO = 8),  (HH = 0.07)                                          23900
C....                                                                     24000
      ONEDEG = 3.1415926535/180.0                                         24100
      NMIN = -1                                                           24200
      IF(DEL.LT.ONEDEG)NMIN = 1                                           24300
      LNG = NMIN+1                                                        24400
      LTD = NMIN+2                                                        24500
      CALL BCDCON(ALOGND,ALOGNM,MINMER,NC,LNG)                            24600
      CALL BCDCON(ALOGXD,ALOGXM,MAXMER,NTC,LNG)                           24700
      CALL BCDCON(ALATND,ALATNM,MINPAR,NLY,LTD)                           24800
      CALL BCDCON(ALATXD,ALATXM,MAXPAR,NRY,LTD)                           24900
C                                                                         25000
C....   SET UP MINIMUM MERIDIAN LABEL                                     25100
      Y1 = YMIN-0.265                                                     25200
      KNT = 0                                                             25300
  100 CALL CENTR(NC,HTLL,TLL)                                             25400
      X1 = XMIN-HTLL                                                      25500
      KI = 0                                                              25600
      KNT = KNT+1                                                         25700
      CALL CHSYM(MINMER,X1,Y1,NC,3)                                       25800
C                                                                         25900
C....   SET UP INTERMEDIATE MERIDIAN LABELS                               26000
  120 KI = KI+1                                                           26100
      KN = XABSF(NNC(KI))                                                 26200
      CALL CENTR(KN,HTLL,TLL)                                             26300
      X1 = XL(KI)-HTLL                                                    26400
      CALL CHSYM(MNMER(KI),X1,Y1,NNC(KI),1)                               26500
  140 IF(KI.LT.KXAXIS)GO TO 120                                           26600
C                                                                         26700
C....   SET UP MAXIMUM MERIDIAN LABEL                                     26800
  150 CALL CENTR(NTC,HTLL,TLL)                                            26900
      X1 = XMAX-HTLL                                                      27000
      CALL CHSYM(MAXMER,X1,Y1,NTC,3)                                      27100
      GO TO(160,180)KNT                                                   27200
```

```
C
C,,,,  SET UP FOR UPPER BORDER
  160 Y1 = YMAX+0.055
      GO TO 100
C
C,,,,  SET UP FOR MINIMUM PARALLEL LABEL
C        FIND X1 PER LEFT BORDER
  180 CALL CENTR(NLY,HTLL,TLL)
      KNT = 0
      X1 = XMIN-(TLL+0.055)
  200 Y1 = YMIN
      KY = 0
      KNT = KNT+1
      CALL CHSYM(MINPAR,X1,Y1,NLY,3)
C
C,,,,  SET UP INTERMEDIATE PARALLEL LABELS
  220 KY = KY+1
      Y1 = YK(KY)-HH
      GO TO(230,240)KNT
C        FIND X1 PER LEFT BORDER
  230 KN = XABSF(NY(KY))
      CALL CENTR(KN,HTLL,TLL)
      X1 = XMIN-(TLL+0.125)
  240 CALL CHSYM(MNPAR(KY),X1,Y1,NY(KY),1)
  260 IF(KY.LT.KYAXIS)GO TO 220
C
C,,,,  SET UP MAXIMUM PARALLEL LABEL
  280 Y1 = YMAX-0.21
      GO TO(290,300)KNT
C        FIND X1 PER LEFT BORDER
  290 CALL CENTR(NRY,HTLL,TLL)
      X1 = XMIN-(TLL+0.055)
  300 CALL CHSYM(MAXPAR,X1,Y1,NRY,3)
      GO TO(320,350)KNT
C
C,,,,  SET UP FOR RIGHT BORDER
  320 X1 = XMAX+0.055
      GO TO 200
  350 RETURN
      END
```

```
                                        IDENT     CHLABEL
PROGRAM LENGTH                  00311
ENTRY POINTS      CHLABEL       00005
BLOCK NAMES
                  MARSYS        00021
                  INPT          00133
                  CHTLBL        00473
EXTERNAL SYMBOLS
                  OBCDICT,
                  BOICON
                  CENTR
                  CHSYM
   00141 SYMBOLS
```

```
      SUBROUTINE APACK(NCHS,STRING,OUTLAB)                              8100
      DIMENSION STRING(NCHS),OUTLAB(1)                                  8200
      ENCODE(8,101,OUTLAB)(STRING(I),I=1,NCHS)                          8300
      RETURN                                                            8400
  101 FORMAT(8R1)                                                       8500
      END                                                               8600
```

```
                                        IDENT     APACK
PROGRAM LENGTH                  00075
ENTRY POINTS     APACK          00006
EXTERNAL SYMBOLS
                 THEND,
                 QBCDICT,
                 ENC,
                 QNSINGL.
   00035 SYMBOLS
      SUBROUTINE OFFOLB(CORAD,ALOC,NTRY)                                15700
      COMMON/INPT/ALATND,     COEHY(5),     ALOGND,     DUMEE(84)       15800
      COMMON/CHTLBL/MINMER,   MNMER(50)    MAXMER,  MINPAR,  MNPAR(50),  15900
     1              MAXPAR,   NC,          NNC(50), NTC,     NLY,        16000
     2              NY(50),   NRY,         XL(50),  YK(50),  KXAXIS,     16100
     3              KYAXIS,   IYN,         NI,      XTIB,    YTIB,       16200
     4              LYN                                                   16300
      DIMENSION LTT(10)                                                  16400
      DATA(IBLNK = 60606060606060608)                                    16500
C                                                                        16600
      KGO = XABSF(NTRY)                                                  16700
      GO TO(10,20,30)KGO                                                 16800
   10 KOROLD = ABSF(ALOGND)                                              16900
      IF(CORAD.LT.0.0)KOROLD = KOROLD*1                                  17000
      IK = 1                                                             17100
      KRT = NTRY                                                         17200
      NTRY = 3                                                           17300
      IAX = 1                                                            17400
      KXAXIS = 0                                                         17500
      GO TO 30                                                           17600
   20 KOROLD = ABSF(ALATND)                                              17700
      IF(CORAD.LT.0.0)KOROLD = KOROLD*1                                  17800
      IK = 1                                                             17900
      NTRY = 3                                                           18000
      IAX = 2                                                            18100
      KYAXIS = 0                                                         18200
   30 CALL RTODM(CORAD,KORDG,CORMN)                                      18300
      KORMN = CORMN                                                      18400
      KORDG = XABSF(KORDG)                                               18500
      IF(KORDG.EQ.KOROLD.AND.KORMN.NE.0)GO TO 40                         18600
      NK = 6                                                             18700
      IF(KORDG.LT.100)NK = NK*1                                          18800
      KOROLD = KORDG                                                     18900
      IF(KRT.LT.0)GO TO 35                                               19000
      ICAR = KORDG*1000+KORMN                                            19100
      IF(CORAD.LT.0.0)KOROLD = KORDG*1                                   19200
      GO TO 50                                                           19300
   35 ICAR = KORDG                                                       19400
      NK = NK*3                                                          19500
      GO TO 50                                                           19600
```

```
 40 NK = *2                                                          19700
    ICAR = KORMN                                                     19800
 50 JK = XABSF(NK)                                                   19900
    DO 60 LZ=1,JK                                                    20000
 60 LTT(LZ) = 0                                                      20100
    CALL BULAB(ICAR,JK,LTT(1))                                       20200
    GO TO(300,120,130,300,150,160)JK                                 20300
120 LTT(3) = LTT(4) = LTT(5) = LTT(6) = IBLNK                        20400
    GO TO 200                                                        20500
130 LTT(4) = LTT(5) = LTT(6) = IBLNK                                 20600
    GO TO 200                                                        20700
150 LTT(3) = LTT(6) = IBLNK                                          20800
    GO TO 200                                                        20900
160 LTT(4) = IBLNK                                                   21000
200 CALL APACK(JK,LTT(1),ICAT)                                       21100
    GO TO(250,260)IAX                                                21200
250 MNMER(IK) = ICAT                                                 21300
    NNC(IK) = NK                                                     21400
    XL(IK) = ALOC                                                    21500
    KXAXIS = KXAXIS+1                                                21600
    IK = IK+1                                                        21700
    GO TO 300                                                        21800
260 MNPAR(IK) = ICAT                                                 21900
    NY(IK) = NK                                                      22000
    YK(IK) = ALOC                                                    22100
    KYAXIS = KYAXIS+1                                                22200
    IK = IK+1                                                        22300
300 RETURN                                                           22400
    END                                                              22500
```

```
                                        IDENT     CHFOLB
PROGRAM LENGTH                  00340
ENTRY POINTS     CHFOLB         00016
BLOCK NAMES
                 INFT           00133
                 CHTLBL         00473
EXTERNAL SYMBOLS
                 01G10100
                 08ODICT
                 RTODM
                 BULAB
                 APACK
   00145 SYMBOLS
```

```
      SUBROUTINE DTOR(DEG,AMIN,SEC,RAD)                              55800
C     CONVERSION OF DEGREES, MINUTES, SECONDS INTO RADIANS           55900
      DG=ABSF(DEG)                                                   56000
      PI=3.14159265                                                  56100
      DEGD=SIGNF((DG+AMIN/60.+SEC/3600.),DEG)                        56200
      RAD=PI*DEGD/180.0                                              56300
      RETURN                                                         56400
      END                                                            56500
```

```
                                        IDENT     DTOR
PROGRAM LENGTH                  00111
ENTRY POINTS     DTOR           00003
EXTERNAL SYMBOLS
                 QBCDICT,

      SUBROUTINE FINDA(RR,X,Y,ALTX,ALTN,ALGX,ALGN,A,ITR)
C        THIS SUBROUTINE IS USED TO CALCULATE THE SEMI-MAJOR AXIS OF THE
C        SHHEROID IN PLOTTER UNITS -- NO FURTHER CONVERSIONS ARE NECESSA
C        NECESSARY TO OUTPUT UNITS TO THE PLOTTER
      IF(X)10,10,30
   10 IF(Y)50,50,20
   20 CALL MERCTR(1,1,0,RR,ALTX,ALGX,DUMMY,FLAMX)
      CALL MERCTR(1,1,0,RR,ALTN,ALGN,DUMMY,FLAMN)
      A=ABSF(Y/(FLAMX-FLAMN))
      ITR = 2
      GO TO 40
   30 A=ABSF(X/(ALGX-ALGN))
      ITR = 1
C   RESTORE BASE MERIDIAN AND PARALLEL IN MERCTR
   40 CALL MERCTR(1,A,RR,ALTN,ALGN,B0B0,D0D0)
C     FIND ACTUAL HEIGHT AND WIDTH OF CHART
      CALL MERCTR(0,A,RR,ALTX,ALGX,XMAX,YMAX)
      CALL MERCTR(0,A,RR,ALTN,ALGN,XMIN,YMIN)
      X = XMAX-XMIN
      Y = YMAX-YMIN
      RETURN
   50 ITR = -1
      RETURN
      END
```

```
                                        IDENT     FINDA
PROGRAM LENGTH                  00246
ENTRY POINTS     FINDA          00003
EXTERNAL SYMBOLS
                 QBCDICT,
                 MERCTR
   00105 SYMBOLS
      SUBROUTINE MERCAT
      COMMON/MARSYS/    CORR(4),     RR,          DEL,         ACHT,
     1                  IPR,         XMIN,        YMIN,        XMAX,
     2                  YMAX,        MP,          ICR,         IA,
     3                  RAHI,        RAWI
C
      COMMON/INPT/ALATND,  ALATNM,  ALATNS,  ALATXD,  ALATXM,  ALATXS,
     1            ALOGND,  ALOGNM,  ALOGNS,  ALOGXD,  ALOGXM,  ALOGXS,
     2            IMPC,    KOMP,    WIDTH,   HITE,    DEGDVD,  DEGDVM,
     3            DEGDVS,  NTIC,    TICLGT,  ALTMD(5),ALTMM(5),ALTMS(5),
     4            ALNMD(5),ALNMM(5),ALNMS(5),ALTSD(5),ALTSM(5),ALTSS(5),
     5            ALNSD(5),ALNSM(5),ALNSS(5),AR(5),   VR(5)
C
      CALL FINDA(RR,WIDTH,HITE,CORR(2),CORR(1),CORR(4),CORR(3),ACHT,IRT)
      IF(IRT)130,130,100
```

```
100   CONTINUE
      RAHI = (CORR(2)-CORR(1))/HITE                                    89400
      RAWI = (CORR(4)-CORR(3))/WIDTH                                   89500
      CALL MERCTR(0,AORT,RR,CORR(1),CORR(3),XMIN,YMIN)                 89600
      CALL MERCTR(0,AORT,RR,CORR(2),CORR(4),XMAX,YMAX)                 89700
 120  RETURN                                                           89800
 130  WRITE(IPR,101)                                                   89900
      GO TO 120                                                        90000
 101  FORMAT(*   INSUFFICIENT INFORMATION TO COMPLETE PLOT*)           90100
      END                                                              90300
```

```
                                        IDENT     MERCAT
PROGRAM LENGTH                  00071
ENTRY POINTS     MERCAT         00014
BLOCK NAMES
                 MAPSYS         00021
                 INPT           00133
EXTERNAL SYMBOLS
                 THEND,
                 OBCDICT,
                 FINDA
                 MERCTR
                 STK,
   00104 SYMBOLS
```

```
      SUBROUTINE MERCTR(IT,A,RR,ALAT,ALON,X,Y)                         90400
      IF(IT)10,20,10                                                   90500
10    BM = ALON                                                        90600
      BP = ALAT                                                        90700
      XB = A*BM                                                        90800
      E = SQRTF(1.0-RR*RR)                                             90900
      E2 = E/2.0                                                       91000
      SINBP = SINF(BP)                                                 91100
      ESINBP = E*SINBP                                                 91200
      YB = A*LOGF((1.0+SINBP)/COSF(BP)*((1.0-ESINBP)/(1.0+ESINBP))**E2) 91300
      X = XB                                                           91400
      Y = YB                                                           91500
      RETURN                                                           91600
20    SINLA = SINF(ALAT)                                               91700
      ESINLA = E*SINLA                                                 91800
      XA = A*ALON                                                      91900
      X = XA-XB                                                        92000
      YA = A*LOGF((1.0+SINLA)/COSF(ALAT)*((1.0-ESINLA)/(1.+ESINLA))**E2) 92100
      Y = YA-YB                                                        92200
      RETURN                                                           92300
      END                                                              92400
```

```
                                IDENT     MERCTR
PROGRAM LENGTH                 00251
ENTRY POINTS     MERCTR        00003
EXTERNAL SYMBOLS
                 02C07111
                 08CDICT
                 SQRTF
                 SINF
                 LOGF
                 COSF
   00073 SYMBOLS

      SUBROUTINE TICX                                                   140000
C                                                                       140100
C*********************************************************************  140200
C *                                                                    140300
C * THIS SUBROUTINE STORES VALUES IN AN ARRAY THAT ARE USED FOR PLOTTING 140400
C * TICK MARKS ON A MERCATOR OR INVERSE MERCATOR PROJECTION CHART      140500
C *                                                                    140600
C*********************************************************************  140700
C                                                                       140800
      COMMON/MARSYS/     CORR(4),      RR,           DEL,          ACHT,  140900
     1                   IPR,          XMIN,         YMIN,         XMAX,  141000
     2                   YMAX,         MP,           ICR,          IA,    141100
     3                   RAHI,         RAWI                               141200
C                                                                       141300
      COMMON/INPT/ALATND,  ALATNM,  ALATNS,  ALATXD,  ALATXM,  ALATXS,  141400
     1            ALOGND,  ALOGNM,  ALOGNS,  ALOGXD,  ALOGXM,  ALOGXS,  141500
     2            MPC,     KOMP,    WIDTH,   HITE,    DEGDVD,  DEGDVM,  141600
     3            DEGDVS,  NTIC,    TICLGT,  ALTMD(5),ALTMM(5),ALTMS(5),141700
     4            ALNMD(5),ALNMM(5),ALNMS(5),ALTSD(5),ALTSM(5),ALTSS(5),141800
     5            ALNSD(5),ALNSM(5),ALNSS(5),AR(5),   VR(5)             141900
      COMMON/FIXGRAT/DDL,NTIX
C                                                                       142000
      DEGW=CORR(4)*CORR(3)                                              142100
      XINCR=XMAX*DDL/(DEGW*NTIX)
C                                                                       142300
C****TICK MARKS ON LOWER BORDER OF CHART                                142400
C                                                                       142500
      IF(TICLGT.LE.0.0)TICLGT=0.06                                      142600
  166 TIC = TICLGT                                                      142700
      Y0 = YMIN                                                         142800
   60 M = 0                                                             142900
      XX = XMIN                                                         143000
   10 XX=XX+XINCR                                                       143100
      IF(XX .GE. XMAX)30,15                                             143200
   15 M=M+1                                                             143300
      IF(M-5)2,1,4                                                      143400
    1 TIC1=2.0*TIC                                                      143500
      GO TO 3                                                           143600
    4 IF(M-10)2,6,6                                                     143700
    6 TIC1=3.0*TIC                                                      143800
      M = 0                                                             143900
      GO TO 3                                                           144000
    2 TIC1=TIC                                                          144100
    3 CALL PLOT(XX,Y0,3)
      YA = Y0+TIC1                                                      144300
      CALL PLOT(XX,YA,2)
      GO TO 10                                                          144500
```

```
C                                                                       144600
C**** TICK MARKS ON UPPER BORDER OF CHART                               144700
C                                                                       144800
  30  IF(Y0 .GE. (YMAX-0.0005))55,35                                    144900
  35  Y0=YMAX                                                           145000
      TIC=-TIC                                                          145100
      GO TO 60                                                          145200
 55   CALL PLOT(XMIN,YMIN,3)
  70  RETURN                                                            145400
      END                                                               145500
```

```
                                  IDENT     TICX
PROGRAM LENGTH                00135
ENTRY POINTS     TICX         00003
BLOCK NAMES
                 MAPSYS       00021
                 INPT         00133
                 FIXGRAT      00002
EXTERNAL SYMBOLS
                 01C04100
                 QBCDICT,
                 PLOT
   00124 SYMBOLS
```

```
      SUBROUTINE TICY                                                   145600
C                                                                       145700
C*********************************************************************** 145800
C *                                                                     145900
C * THIS SUBROUTINE STORES VALUES IN AN ARRAY THAT ARE USED FOR PLOTTING 146000
C * TICK MARKS ON A MERCATOR OR INVERSE MERCATOR PROJECTION CHART.      146100
C *                                                                     146200
C*********************************************************************** 146300
C                                                                       146400
      COMMON/MAPSYS/    CORR(4),      RR,           DEL,          ACHT,  146500
     1                  IPR,          XMIN,         YMIN,         XMAX,  146600
     2                  YMAX,         MP,           ICR,          IA,    146700
     3                  RAWI,         RAWI                                146800
C                                                                       146900
      COMMON/INPT/ALATND,  ALATNM,  ALATNS,  ALATXD,  ALATXM,  ALATXS,  147000
     1            ALOGND,  ALOGNM,  ALOGNS,  ALOGXD,  ALOGXM,  ALOGXS,  147100
     2            MPC,     KOMP,    WIDTH,   HITE,    DEGDVD,  DEGDVM,  147200
     3            DEGDVS,  NTIC,    TICLGT,  ALTMD(5),ALTMM(5),ALTMS(5),147300
     4            ALNMD(5),ALNMM(5),ALNMS(5),ALTSD(5),ALTSM(5),ALTSS(5),147400
     5            ALNSD(5),ALNSM(5),ALNSS(5),AR(5),   VR(5)             147500
C                                                                       147600
  60  ALAT=CORR(1)                                                      147800
      YINCR=DEL/NTIC                                                    147900
      IF(TICLGT.LE.0.0)TICLGT=0.06                                      148000
 166  TIC = TICLGT                                                      148100
      XX = XMIN                                                         148200
      MI = 3                                                            148300
 200  N = 0                                                             148400
      YY = YMIN                                                         148500
 100  ALAT=ALAT+YINCR                                                   148600
      CALL MERCTR(0,ACHT,RR,ALAT,CORR(MI),DUM,YY)
      IF(YY .GE. YMAX)99,20                                             148800
```

```
 20   N=N+1                                                    148900
      IF(N-5)5,4,15                                            149000
 4    TIC1=2.0*TIC                                             149100
      GO TO 6                                                  149200
 15   IF(N-10)5,17,17                                          149300
 17   TIC1=3.0*TIC                                             149400
      N = 0                                                    149500
      GO TO 6                                                  149600
 5    TIC1=TIC                                                 149700
 6    CALL PLOT(XX,YY,3)
      XA = XX+TIC1                                             149900
      CALL PLOT(XA,YY,2)
 35   GO TO 100                                                150100
 99   IF(XX .GE. (XMAX-0.0005))105,48                          150200
 48   XX=XMAX                                                  150300
      TIC=-TIC                                                 150400
      ALAT=CORR(1)                                             150500
      MI = 4                                                   150600
      GO TO 200                                                150700
 105  CALL PLOT(XMIN,YMIN,3)
 401  RETURN                                                   154300
      END                                                      154400
```

```
                                    IDENT     TICY
PROGRAM LENGTH                 00147
ENTRY POINTS     TICY          00003
BLOCK NAMES
                 MAPSYS        00021
                 INPT          00133
EXTERNAL SYMBOLS
                 01C05100
                 08CDICT,
                 MERCTR
                 PLOT
   00127 SYMBOLS
```

```
      SUBROUTINE BLLAB(INLAB,KJ,ITEMP)                         13300
      DIMENSION ITEMP(KJ)                                      13400
      ILAB=INLAB                                               13500
      DO 10 IK=1,KJ                                            13600
      K=KJ-IK+1                                                13700
      ITEMP(K)=MOD(ILAB,10)                                    13800
      ILAB=ILAB/10                                             13900
      IF(ILAB)10,11,10                                         14000
 10   CONTINUE                                                 14100
 11   RETURN                                                   14200
      END                                                      14300
```

```
                                        IDENT     BULAB
PROGRAM LENGTH                 00103
ENTRY POINTS     BULAB         00003
EXTERNAL SYMBOLS
                 Q8CDICT,
                 XMCDF
   00033 SYMBOLS

SUBROUTINE RTODM(RAD,IDEG,AMIN)                                          128400
PI = 3.1415926535                                                        128500
RTOD = 180.0/PI                                                          128600
DELTA = 0.0000001                                                        128700
DEG = SIGNF((ABSF(RAD)*RTOD+DELTA),RAD)                                  128800
IDEG = DEG                                                               128900
AMIN = ABSF(DEG-IDEG)*60.0                                               129000
RETURN                                                                   129100
END                                                                      129200
```

```
                                        IDENT     RTODM
PROGRAM LENGTH                 00114
ENTRY POINTS     RTODM         00003
EXTERNAL SYMBOLS
                 Q1C10100
                 Q1C03100
                 Q8CDICT,
   00033 SYMBOLS
      SUBROUTINE ANGANC (XPT,XA,YPT,YA,ANG)                              G   1
C     COMPUTES ANGLE OF ROTATION FOR ANNOTATION                          G   2
C                                                                        G   4
      PI=3.141592653                                                     G   5
      XRAD=0.01745329                                                    G   6
      TEMP=ANG                                                           G   7
      IF (XPT-XA) 1,10,1                                                 G   8
    1 ARG=(YPT-YA)/(XPT-XA)                                              G   9
      IF (ARG) 2,4,6                                                     G  10
    2 IF (YPT-YA) 3,4,9                                                  G  11
    3 ANG=(ATAN(ARG))/XRAD                                               G  12
      GO TO 14                                                           G  13
    4 IF (XPT-XA) 5,10,10                                                G  14
    5 ANG=PI/XRAD                                                        G  15
      GO TO 14                                                           G  16
    6 IF (YPT-YA) 7,4,8                                                  G  17
    7 ANG=(ATAN(ARG)+PI)/XRAD                                            G  18
      GO TO 14                                                           G  19
    8 ANG=(ATAN(ARG))/XRAD                                               G  20
      GO TO 14                                                           G  21
    9 ANG=(ATAN(ARG)+PI)/XRAD                                            G  22
      GO TO 14                                                           G  23
   10 IF (YPT-YA) 11,13,12                                               G  24
   11 ANG=270.0                                                          G  25
      GO TO 14                                                           G  26
   12 ANG=90.0                                                           G  27
      GO TO 14                                                           G  28
   13 ANG=TEMP                                                           G  29
   14 RETURN                                                             G  30
      END                                                                G  31
```

```
                                        IDENT     ANGANO
PROGRAM LENGTH                  00242
ENTRY POINTS     ANGANO         00003
EXTERNAL SYMBOLS
                 QBCDICT,
                 ATANF
   00076 SYMBOLS

      SUBROUTINE FIXANG(XPT,YPT,ANG,CHAR,KOUNT,ILINE,IPT,IUP)
C     ANNOTATES FIX NUMBERS                                                I   2
C                                                                          I   4
      AHT=0.07
      NFIG=3
      XRAD=0.01745329                                                      I   5
      CNG=ANG*90.                                                          I   6
      IF (MOD(KOUNT,2).NE.0) GO TO 1                                       I   7
C     ANNOTATES FIGURES TO THE RIGHT HAND SIDE OF THE DATA POINT           I   8
      XP=XPT                                                               I   9
      YP=YPT                                                               I  10
      GO TO 4                                                              I  11
C     ANNOTATES FIGURES TO THE LEFT HAND SIDE OF THE DATA POINT            I  12
    1 BNG=(CNG+180.)*XRAD                                                  I  13
      IF (NFIG.GT.4) GO TO 2                                               I  14
      HYP=AHT*(6./7.)*(NFIG+1)                                             I  15
      GO TO 3                                                              I  16
    2 HYP=AHT*(6./7.)*NFIG                                                 I  17
    3 YY=HYP*SINF(BNG)                                                     I  18
      XX=HYP*COSF(BNG)                                                     I  19
      YP=YPT+YY                                                            I  20
      XP=XPT+XX                                                            I  21
C ILINE=0 EVERY POINT     ILINE=1  EVERY N TH POINT ANNOTATED
C  ILINE=2  PLOT VALUE SERIES  NO ANNOTATION
 4    IF(ILINE-1)10,11,9
 11   IF(MOD(KOUNT,IPT),NE.1) GO TO 9
      CALL PLOT(XPT,YPT,IUP)
      CALL NUMBER(XP,YP,AHT,CHAR,CNG,2HF5)
      CALL PLOT(XPT,YPT,3)
      CALL SYMBOL(XPT,YPT,0.105,0,0,0,-1)
      GO TO 7
 9    CALL PLOT(XPT,YPT,IUP)
      GO TO 7
 10   CALL NUMBER (XP,YP,AHT,CHAR,CNG,2HF5)
      CALL PLOT(XPT,YPT,3)
 20   CALL SYMBOL(XPT,YPT,0.020,3,0,0,-1)
      GO TO 7
    7 CALL PLOT (XPT,YPT,3)                                                I  31
      IUP=2
    8 RETURN                                                               I  43
      END                                                                  I  44
```

```
                                        IDENT     FIXANO
PROGRAM LENGTH                  00332
ENTRY POINTS     FIXANO         00005
EXTERNAL SYMBOLS
                 Q1C04100
                 QBCDICT,
                 PUCT
                 NUMBER
                 SYMBOL
                 XMCDF
                 SINF
                 COSF
     00133 SYMBOLS
LOAD


ABORT, LUN UNIT          READ ATTEMPT ON UNASSIGNED UNIT,MUST HAVE EQUIP
                         DECLARATION, YOU HAVE TRIED TO READ FROM A UNIT THAT
                         HAS NOT BEEN WRITTEN ON, IF LUN=69,CHECK FORTRAN CARD
                         FOR X OPTION,

     LUN := 69
```

```
 0B MESSAGES
               JOB,002171, 3600,009MLB
                TERM, UN UNIT

SEQUENCE NUMBER 002171 TERMINATED AT    214541 ELAPSED TIME= 00 HRS, 00 MIN, 59 SEC, OR   59128 MILLISECONDS
XXXMMMMMMMMMMMMMMMMMMMMMMMMMMMMMMMMMMMMMMMMMMMMMMMMMMMMMMMMMMMMMMMMMMMMMMMMMMMMMMMMMMMMMMMMMMMMMMMMMMMMMMMMMMMMMMMMMMMMMMMMMMMMMXXX
XXXMMMMMMMMMMMMMMMMMMMMMMMMMMMMMMMMMMMMMMMMMMMMMMMMMMMMMMMMMMMMMMMMMMMMMMMMMMMMMMMMMMMMMMMMMMMMMMMMMMMMMMMMMMMMMMMMMMMMMMMMMMMMMXXX
XXXMMMMMMMMMMMMMMMMMMMMMMMMMMMMMMMMMMMMMMMMMMMMMMMMMMMMMMMMMMMMMMMMMMMMMMMMMMMMMMMMMMMMMMMMMMMMMMMMMMMMMMMMMMMMMMMMMMMMMMMMMMMMMXXX

THE TOTAL NUMBER OF LINES PRINTED FOR THIS JOB WAS        1137
```