NRL Report 6878

Ratio Analysis Diagram Interpretations of the Fracture Toughness Characteristics of Maraging Steel Welds in the Range From 150- to 200-KSI Yield Strength

P. P. Puzak and E. A. Lange

Strength of Metals Branch
Metallurgy Division

March 26, 1969

NAVAL RESEARCH LABORATORY
Washington, D.C.

This document has been approved for public release and sale; its distribution is unlimited.

ABSTRACT

The ratio analysis diagram (RAD), which is a graphical method by which the fracture toughness of a material may be commonly indexed by various energy scales, was used to characterize the fracture behavior of maraging steel weld metals in the yield strength range from 150 to 200 ksi. Dynamic tear (DT) tests for indexing to the RAD were conducted for four wire compositions of the following nominal analyses: 12%Ni-3%Cr-3%Mo, 17%Ni-2%Co-3Mo, 12%Ni-5%Cr-3%Mo, and 18%Ni-8%Co-4%Mo. RAD positions for the four weld metals indicated that the fracture toughness of these materials was dominated by yield strength. The predicted structural performance ranged from fracture initiation requiring large flaws and plastic instability for 160-ksi yield strength material, to fracture initiation requiring only flaws in the range of tenths of an inch and elastic stresses for 190-ksi yield strength material. DT tests conducted in the range from 30° to 80°F indicated a significant but small (with respect to flaw size vs stress resistance) temperature transition effect. Shelf properties are attained at 80°F, or possibly higher temperatures, which approximately equal the fracture toughness of plate material in the optimum material trend line (OMTL) corridor.

PROBLEM STATUS

This report completes one phase of the problem. Work on other phases is continuing.

AUTHORIZATION

NRL Problems M01-25 and F01-17
Projects RR-007-01-46-5432, SF 51-541-001-12383, and S-4607-11894

Manuscript submitted December 30, 1968.

RATIO ANALYSIS DIAGRAM INTERPRETATIONS OF THE FRACTURE TOUGHNESS CHARACTERISTICS OF MARAGING STEEL WELDS IN THE RANGE FROM 150- TO 200-KSI YIELD STRENGTH

INTRODUCTION

Exploratory studies for welds of yield strengths in the range from 150 to 200 ksi have provided ample evidence that the best practices of gas-tungsten-arc (GTA) processes are essential for maximizing the fracture toughness of welds in this range. This range of yield strengths features a dramatic decrease in fracture toughness with increasing yield strength for the best base metals developed to date. The same effects of increasing strength also apply for weld metals. This relationship between yield strength and fracture toughness has been defined as a "strength transition" because of the similarity to the general shape of the temperature transition curves.

Figure 1, taken from a previous report (1), illustrates the general trends of shielded-metal-arc (SMA), gas-metal-arc (GMA), and GTA weld deposit fracture toughness for 1-in.-thick welds. These trends are compared directly with the strength transition "corridor" for 1-in.-thick plate materials of optimum fracture-toughness properties. The indexing procedure shown on Fig. 1 is referred to as the ratio analysis diagram (RAD). Details concerning its derivation are provided in a previous report (1). The importance of the diagram lies in the common indexing of fracture toughness by various scales such as the Charpy V (C_v) shelf, the dynamic tear (DT) test shelf, and the K_{Ic} value for plane strain fracture.

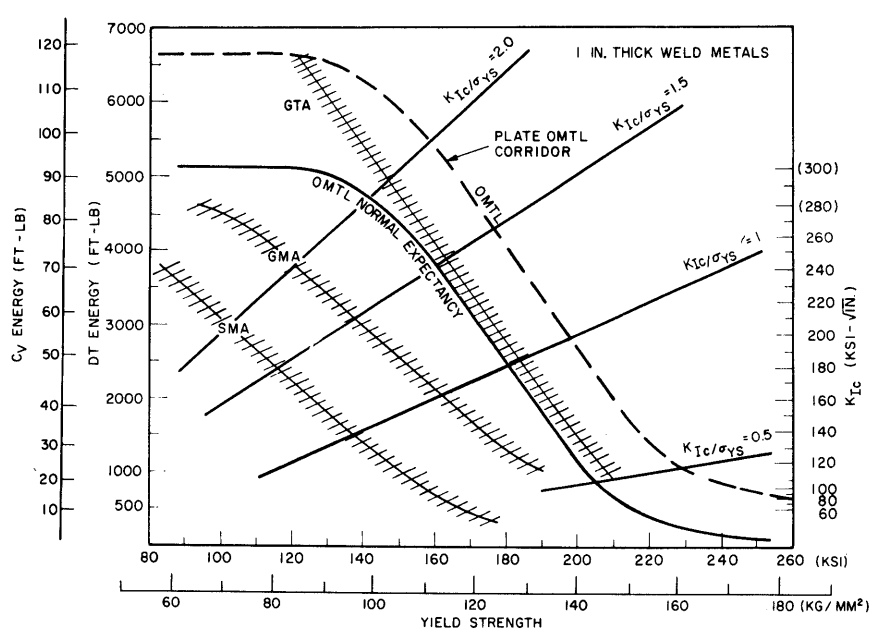

Fig. 1 - Generalized ratio analysis diagram (RAD) for base steels and related weld metals (from Ref. 1)

The K_{Ic}/σ_{ys} ratio lines are interpretable in terms of flaw-size vs stress conditions for fracture. For 1-in. thicknesses, ratio values in excess of 1.5 signify ductile slant fracture, relatable to very large flaws and plastic loading. For ratio values below 0.5, small flaws on the order of tenths of an inch may be expected to cause fracture initiation at elastic stress levels. The range of ratios between 1.5 and 0.5 represents transition from ductile to brittle behavior. Definition of critical flaw sizes are best obtained from charts as presented in Ref. 1.

We should call attention to the fact that the ductile-to-brittle (temperature-independent) strength transition is obtained generally in a yield strength range of approximately 40 ksi. This is the "sharp" effect of yield strength that is defined as the fracture toughness strength transition. The specific strength range of the transition depends on metallurgical quality factors.

The purpose of this report is threefold: (a) to bring the analyses technique of the RAD to the attention of the field of weld metal development; (b) to illustrate the application of the DT test in the assessment of weld metal properties falling in the strength transition range; and (c) to present data of interest for maraging welds of intermediate strength levels.

The weld metals involved in this study provide major problems of fracture toughness characterization, which are resolved by the DT test. The K_{Ic} test capability for characterization of 1-in. plate (or weld) is limited to K_{Ic}/σ_{ys} ratios of approximately 0.7. In effect, weld metals of higher fracture toughness cannot be characterized by valid K_{Ic} values. Charpy (C_v) test interpretations are complicated by the problem of defining the temperature range for which the shelf correlation to the DT test applies. This question is discussed and illustrated with full-scale flawed pressure vessel tests, simulating service failures, in Ref. 1. The authors are of the opinion, based on extensive correlations of the various fracture toughness tests, that C_v test data comparisons based on a fixed temperature (say ambient) can be highly misleading. In fact, such data cannot be used with confidence, particularly for base steels or welds of high strength levels. Unfortunately, this practice is frequently followed in weld property comparisons.

The DT test provides a practical method for obtaining reliable fracture toughness characterizations covering the range from the relatively brittle to high levels of fracture toughness. In addition to providing an energy value which is indexable to the RAD, the DT test develops the characteristic fracture propagation mode for the metal. For example, Fig. 2 illustrates 1-in.-thick weld metal DT tests of ratios 1.5 and 0.5 characteristics. The difference in fracture toughness is clearly indicated by the slant and flat fractures which relate to these two respective ratios.

The effects of temperature result in changing the characteristic fracture mode until the shelf region is reached. It is important to note that the shelf region for the strength transition may represent a mixed-mode fracture (combined flat and slant), at least for intermediate levels of fracture toughness. The fracture mode definition of the DT test, as well as the energy indication of the shelf, provides clear evidence of the temperatures above which conditions of maximum attainable fracture toughness are reached. The C_v test cannot provide this information directly. The use of K_{Ic} tests for shelf definition is prohibitively expensive and, moreover, is possible only for shelf conditions of plane strain (low) fracture toughness.

MATERIALS AND WELD PROCEDURES

Three weld compositions developed for matching the properties of 12%Ni (180) maraging plate metal, and one composition for matching the properties of 18%Ni (200)

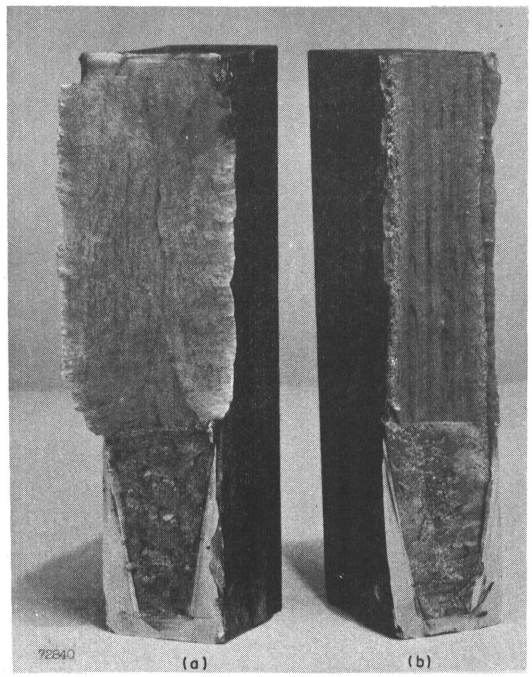

Fig. 2 - Illustrating fracture appearances of (a) 1.5 and (b) 0.5 K_{Ic}/σ_{ys} weld metals

plate metal were included in this investigation. Except for one sample of 12%Ni-5%Cr-3%Mo (12-5-3) material, all filler wires were the product of pilot production 1000-lb vacuum-induction-melted (VIM) heats. The nominal range for primary alloy elements (Ni, Cr, Co, Mo, Ti, Al) is based upon specification standards; however, the residual (impurity) elements (C, S, P, Mn, Si, H_2, O_2, and N_2) were minimized to obtain the best weld wire product possible. Relatively low levels of impurity elements in these weld wires are apparent from the analyses presented in Table 1. All of the wires were vacuum-anneal processed. In effect, these represent the best material that can be produced by practices translatable to commercial production.

Special weld joints were used to provide specimens which would fracture completely within the material under study. Narrow weld joints may result in partial fracture of plate material and thus complicate interpretations. The joint designs are shown in Fig. 3. The automatic GTA cold wire feed welding process was used for all welds. The welds were tested in accordance with the standard procedure for the conduct of the 1-in. DT test, described in Ref. 2.

Prior to welding the bottom side of the weld joints illustrated in Fig. 3, the backup bar was removed, plus approximately 1/8 in. of weld metal, using arc-air gouging, chipping, or grinding to expose sound and clean weld metal. The specific welding parameters that were used to provide a series of 3.5-ft-long GTA weldments are given in Table 2. Commercial argon at flow rates of 30 to 40 cfh was used as shielding gas, with no auxiliary shielding, and all welding was started without preheat and finished with 225-250°F maximum interpass temperature control. Heat treatment after welding consisted of aging at 850 or 900°F for a period ranging from 3 to 24 hr. Specific heat treatment conditions for various samples are given in Table 3.

Table 1
Chemical Composition of Maraging Steel Weld Wires

Weld Metals	Composition (%)											Composition (ppm)		
	Ni	Cr	Co	Mo	Ti	Al	C	S	P	Mn	Si	H_2	O_2	N_2
12-3-3 (160 YS)														
Specification	11.9/12.7	3.4/4.5	–	2.6/2.9	0.4/0.5	0.05*	0.02*	0.005*	0.005*	0.10*	0.10*	3.0*	75.0*	50.0*
Heat No. 6-4072	12.3	4.00	–	2.75	0.40	<0.05	0.013	0.004	<0.005	<0.10	<0.10	<1.0	11.0	<10.0
12-5-3 (180 YS)														
Specification														
Heat No. V-363†	12.32	4.92	–	3.36	0.30/0.34	0.26/0.34	0.006/0.010	0.003/0.006	0.001/0.003	0.02	0.05	1.8/5.0	23.0/48.0	66.0/87.0
Specification	11.9/12.4	4.8/5.2	–	2.9/3.2	0.35/0.45	0.30/0.40	0.010*	0.005*	0.005*	0.05*	0.08*	3.0*	30.0*	50.0*
Heat No. 03028	12.10	4.94	–	3.17	0.40	0.31	0.010	0.005	0.004	0.03	0.05	1.1	25.0	10.0
17-2-3 (180 YS)														
Specification	16.0/17.5	–	2.0/2.5	2.8/3.1	0.53/0.63	0.05*	0.01*	0.005*	0.005*	0.10*	0.10*			
Heat No. 01545	16.65	–	2.34	2.98	0.59	0.04	0.01	0.006	0.003	<0.01	0.01	2.0	10.0	14.0
18-8-4 (200 YS)														
Specification	17.5/18.5	–	7.5/8.0	3.6/3.8	0.23/0.33	0.05/0.15	0.01*	0.005*	0.005*	0.05*	0.05*	3.0*	30.0*	50.0*
Heat No. 03024	17.86	–	7.58	3.68	0.30	0.05	0.005	0.004	0.003	0.02	0.03	1.9	23.0	43.0
18-8-4 (Mod. 200 YS)														
Specification	17.5/18.5	–	7.5/8.0	3.6/3.8	0.10/0.20	0.05/0.15	0.01*	0.005*	0.005*	0.05*	0.05*	3.0*	30.0*	50.0*
Heat No. 03030	17.80	–	7.71	3.73	0.24	0.13	0.010	0.004	0.003	0.01	0.02	1.7	29.0	17.0

*Maximum.

†Weld wire product from 350-lb laboratory vacuum-induction-melt (VIM) heat; all others are from pilot production 1000-lb VIM heats.

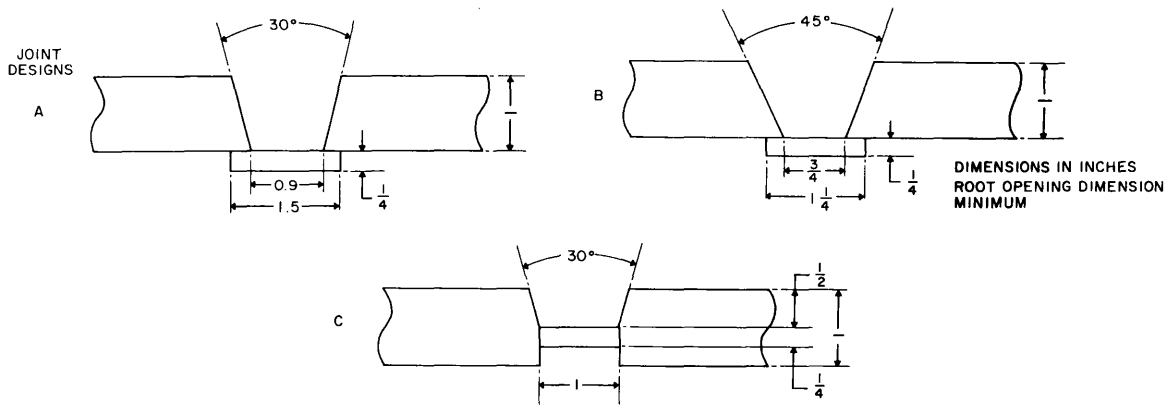

Fig 3 - Three joint designs for weld metal DT tests

Table 2
Welding Parameters for GTA Maraging Steel Welds

Number	Wire Heat No.	Nominal Analysis	Current (Amps)	Voltage (Volts)	Travel Speed (in./min)	Wire Feed (in./min)	Argon Shielding Gas Cu ft/hr	Max. Inter-pass Temp. (°F)
M11	6-4072	12-3-3*	280	11	4	22	40	225
M41	6-4072	12-3-3	290	11	5	22	30	225
M46	6-4072	12-3-3	320	12	4.5	22	40	225
M5	V-363	12-5-3*	280	11.2	4.1	22	40	225
M7	V-363	12-5-3	280	11	4	22	40	225
M43	03028	12-5-3	290	11	5	22	30	225
M44	03028	12-5-3	290	11	5	22	30	225
M45	03028	12-5-3	320	12	4.5	22	40	225
M12	01545	17-2-3†	280	11	4	22	40	225
M13	01545	17-2-3	280	11	4	22	40	225
M19	01545	17-2-3	300	11	4.5	22	30	200
M20	01545	17-2-3	300	11	4.5	22	30	200
M26	01545	17-2-3	280	10	5	22	30	225
M27	01545	17-2-3	280	10	5	22	30	225
M42	01545	17-2-3	290	11	5	22	30	225
M28	03030	18-8-4†	280	10	5	20	40	225
M28A	03030	18-8-4	280	10	5	20	40	225
M29	03030	18-8-4	280	10	5	20	40	225
M30	03024	18-8-4	280	12	5	20	30	225
M30A	03024	18-8-4	280	12	5	20	30	225
M31	03024	18-8-4	280	12	5	20	30	225

*12-3-3 and 12-5-3 refer to Ni-Cr-Mo contents. †17-2-3 and 18-8-4 refer to Ni-Co-Mo contents.

DISCUSSION OF RESULTS

Weld Metal for 12%Ni (180) Maraging Steel Plates

The compositions aimed at developing 180-ksi yield strength were of nominal 12%Ni-3%Cr-3%Mo (12-3-3), 17%Ni-2%Co-3%Mo (17-2-3) and 12%Ni-5%Cr-3%Mo (12-5-3) analyses. Variations in aging treatments influenced yield strength to a minor extent. The fracture toughness performance was dominated by the specific yield strength level attained by each base composition. The RAD positions of all the weld metal data points were confined to a distinct "band," as shown in Fig. 4. The influence of weld metal yield strength can be compared directly with the slope and position of the base metal optimum materials trend line (OMTL). It appears that the decrease in fracture toughness with increasing

Table 3
Test Data for One-In.-Thick GTA Welds for Maraging Steel Weld Metals.
Tensile Properties Were Obtained with 0.505-In.-Diam Weld Metal Specimens.

NRL No.	Nominal Analysis	Aging (°F/hr)	YS (ksi)	UTS (ksi)	El. (%)	RA (%)	C_v at 30°F	C_v at 80°F	DT at 30°F	DT at 80°F
M11*	12-3-3†	850/24	163.7	170.9	15.0	61.8	72	82	3228*	3585*
M41	12-3-3	900/3	153.2	160.1	16.5	62.0	71	77	4846	<5000
M46	12-3-3	900/8	155.3	160.7	17.0	64.8	78	88	4288	--
M5	12-5-3†	850/12	179.0	188.0	16.0	62.4	48	48	--	--
M7*	12-5-3	850/24	181.1	188.5	13.0	58.2	50	56	1356*	--
M43	12-5-3	900/3	178.6	191.5	14.0	57.7	39	45	1170	2145
M44	12-5-3	900/24	187.0	195.7	14.0	56.1	33	39	1133	1784
M45	12-5-3	900/3	186.9	195.8	13.5	57.9	38	39	1173	1296
M12*	17-2-3‡	850/24	168.1	180.5	15.0	60.0	48	52	2560*	--
M13	17-2-3	850/12	164.8	175.6	14.5	59.9	47	57	2560	3585
M19	17-2-3	900/3	174.0	183.4	15.0	59.0	47	50	2733	--
M20	17-2-3	900/3	179.3	187.0	14.0	55.8	45	47	2501	--
M27	17-2-3	900/7	176.5	186.4	13.5	54.8	47	52	1996	2413
M42	17-2-3	900/24	172.0	182.5	13.5	49.2	47	50	1996	3040
M28	18-8-4‡	900/8	191.3	198.5	12.5	56.2	28	28	930	--
M28A	18-8-4	900/24	190.9	198.4	13.5	55.4	26	27	810	--
M29	18-8-4	900/3	189.3	195.8	12.5	53.8	29	29	931	1228
M30	18-8-4	900/8	193.5	199.8	12.0	54.0	31	32	1251	--
M30A	18-8-4	900/24	189.7	199.2	13.5	57.4	31	32	1448	--
M31	18-8-4	900/3	192.4	199.2	12.5	56.1	32	32	1246	--

*Two-in.-thick weldments evaluated in DT with 1-in. DT specimens. All other weldments were 1-in. thick.

†12-3-3 and 12-5-3 refer to Ni-Cr-Mo contents.

‡17-2-3 and 18-8-4 refer to Ni-Co-Mo contents.

yield strength is slightly sharper than that of the base metal. A more detailed comparison may be made by consideration of the "corridor" for the base metal, which defines the band of expected values. Additionally, exact comparisons with the base metal would be justified only if the weld metals were of shelf level properties at the 30°F test temperature. This was not the case, and additional studies of the effects of increasing temperature disclose attainment of properties nearly equivalent to the plate material corridor. The base metal corridor relates to full attainment of shelf properties at the 30°F reference temperature.

The influence of temperature in the range of 30 to 80°F in the performance of specific weld metals can be assessed approximately by comparison of the low (30°F) and high (80°F) end of the weld metal data band, as shown in Fig. 4. Both the 17-2-3 and the 12-5-3 welds displayed increases of 50% or more in DT energy between 30°F and 80°F. In general, the effect of increased temperature on the K_{Ic}/σ_{ys} ratio increased is on the order of 0.2 to 0.3 -which, while small, is significant. These data also indicate that the transition to full shelf fracture toughness occurs at higher temperatures for the weld metals as compared to the plate materials. These deductions provide examples of the significant interpretations that can be made using the DT test.

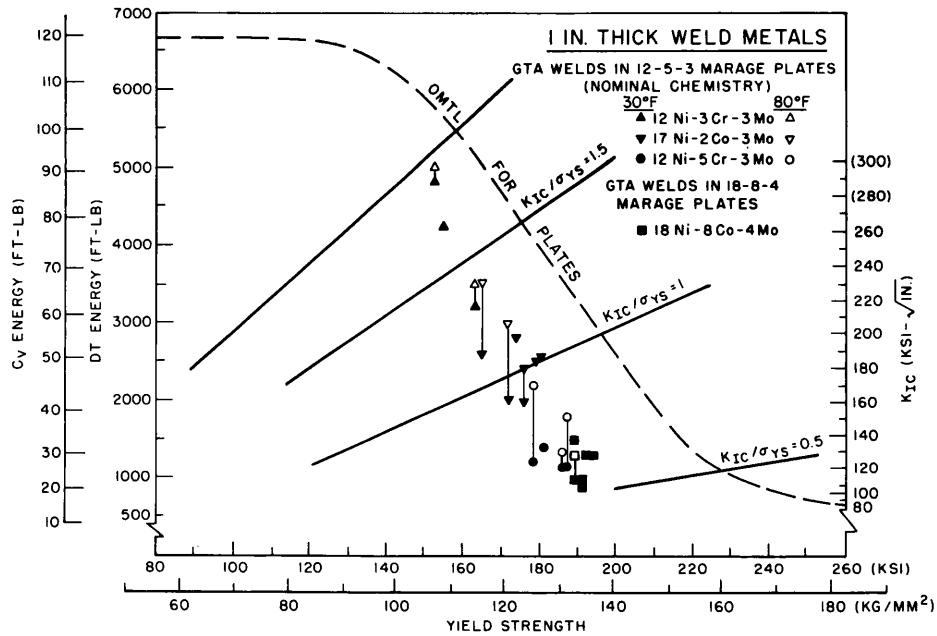

Fig. 4 - Ratio analysis diagram (RAD) trend band for maraging welds compared to plate material limit properties as defined by optimum material trend line (OMTL)

Weld Metals for the 18%Ni (200) Maraging Steel Plates

Two heats of matching composition for the 18%Ni (200) maraging grade were included in this investigation. The chemical compositions and heat numbers for the nominally 18%Ni-8%Co-4%Mo (18-8-4) weld metals are given in Table 1, and the welding parameters are listed in Table 2. Mechanical property data are summarized in Table 3 and plotted in the RAD of Fig. 4.

The location of the DT data points for these higher strength weld metals appears to be an extension of the previously described trend band. The DT properties indicate that valid K_{Ic} values on the order of 100-140 ksi $\sqrt{in.}$ (ratios on the order of 0.5 to 0.7) would be measurable by fracture mechanics tests based on 1-in.-thick specimens.

Essentially equivalent yield strength values of approximately 190 ksi were developed by both the base composition and the titanium-modified 18-8-4 weld metals. The increase in titanium content from 0.24 to 0.30% was either ineffectual or it was masked by other compositional variations. On the basis of 210-ksi yield strength expectancy for 18%Ni (200) grade plate, the matching weld metals develop a weld joint yield strength efficiency of approximately 90%. Limited DT tests were conducted at 80°F; although significant increases in fracture toughness were noted, the increase was not sufficient to indicate exceeding the plane strain (brittle) conditions for 1-in. thicknesses.

SUMMARY AND CONCLUSIONS

Fracture toughness data obtained from DT tests of weld metal coupled with the direct structural interpretations of the ratio analysis diagram (RAD) permit the following summary conclusions to be made for maraging steel welds in the range from 150- to 200-ksi yield strength.

1. The fracture toughness characteristics of high metallurgical quality maraging steel weld metals are dominated by the yield strength level. The usual effects of the "strength transition" are demonstrated.

2. The fracture resistance of maraging weld metals decreases sharply in the range from 160- to 190-ksi yield strength. The decrease is caused by conditions that range from requiring large flaws and plastic instability for fracture at the 160-ksi yield strength level, to that relating to small flaws (in the range of tenths of an inch) and elastic stresses for fracture at the 190-ksi yield strength level.

3. The yield strength level is essentially fixed by the nominal composition and can only be varied in a limited range with modifications of recommended aging heat treatments.

4. The subject weld metals are in the transition temperature region at 30°F. Attainment of maximum fracture toughness apparently requires temperatures of 80°F or possibly higher. However, the evidence indicates that the shelf fracture toughness approaches, but does not exceed, that of the plate material optimum material trend line (OMTL) corridor. In effect, this signifies that essentially equivalent shelf fracture toughness may be attained, but at higher temperatures than for the plate material.

ACKNOWLEDGMENTS

The authors wish to acknowledge the guidance received from Mr. W.S. Pellini in the preparation of this report and the expert experimental work conducted by Messrs. M. Martin, J. Davenport, A. Kuntz, and C. Forsht. The authors are also grateful for the support received from the Office of Naval Research, the Navy Ship Systems Command (Code 03422), and the Deep Submergence Systems Project (Code DSSP-221) for their support of this work.

REFERENCES

1. Pellini, W.S., "Advances in Fracture Toughness Characterization Procedures and in Quantitative Interpretations to Fracture-Safe Design for Structural Steels," NRL Report 6713, Apr. 1968; also, Welding Research Council Bulletin 130, May 1968.

2. Puzak, P.P., and Lange, E.A., "Standard Method for 1-Inch Dynamic Tear (DT) Test," NRL Report 6851, February 1969.

Security Classification

DOCUMENT CONTROL DATA - R & D

(Security classification of title, body of abstract and indexing annotation must be entered when the overall report is classified)

1. ORIGINATING ACTIVITY *(Corporate author)* Naval Research Laboratory Washington, D.C. 20390	2a. REPORT SECURITY CLASSIFICATION Unclassified 2b. GROUP

3. REPORT TITLE

RATIO ANALYSIS DIAGRAM INTERPRETATIONS OF THE FRACTURE TOUGHNESS CHARACTERISTICS OF MARAGING STEEL WELDS IN THE RANGE FROM 150- TO 200-ksi YIELD STRENGTH

4. DESCRIPTIVE NOTES *(Type of report and inclusive dates)*

Final report on one phase of problem; work on other phases continues.

5. AUTHOR(S) *(First name, middle initial, last name)*

P.P. Puzak and E.A. Lange

6. REPORT DATE March 26, 1969	7a. TOTAL NO. OF PAGES 11	7b. NO. OF REFS 2
8a. CONTRACT OR GRANT NO. NRL Problems M01-25 and F01-17 b. PROJECT NO. RR 007-01-46-5432 c. SF 51-541-003-12383 d. S-4607-11894	9a. ORIGINATOR'S REPORT NUMBER(S) NRL Report 6878 9b. OTHER REPORT NO(S) *(Any other numbers that may be assigned this report)*	

10. DISTRIBUTION STATEMENT

This document has been approved for public release and sale; its distribution is unlimited.

11. SUPPLEMENTARY NOTES	12. SPONSORING MILITARY ACTIVITY Dept. of the Navy (Office of Naval Research, and Navy Ship Systems Command), Washington, D.C., 20360

13. ABSTRACT

The ratio analysis diagram (RAD), which is a graphical method by which the fracture toughness of a material may be commonly indexed by various energy scales, was used to characterize the fracture behavior of maraging steel weld metals in the yield strength range from 150 to 200 ksi. Dynamic tear (DT) tests for indexing to the RAD were conducted for four wire compositions of the following nominal analyses: 12%Ni-3%Cr-3%Mo, 17%Ni-2%Co-3%Mo, 12%Ni-5%Cr-3%Mo, and 18%Ni-8%Co-4%Mo. RAD positions for the four weld metals indicated that the fracture toughness of these materials was dominated by yield strength. The predicted structural performance ranged from fracture initiation requiring large flaws and plastic instability for 160-ksi yield strength material, to fracture initiation requiring only flaws in the range of tenths of an inch and elastic stresses for 190-ksi yield strength material. DT tests conducted in the range from 30°to 80° F indicated a significant but small (with respect to flaw size vs stress resistance) temperature transition effect. Shelf properties are attained at 80° F, or possibly higher temperatures, which approximately equal the fracture toughness of plate material in the optimum material trend line (OMTL) corridor.

DD FORM 1 NOV 65 1473 (PAGE 1)

S/N 0101-807-6801

Security Classification

Security Classification

14. KEY WORDS	LINK A ROLE	LINK A WT	LINK B ROLE	LINK B WT	LINK C ROLE	LINK C WT
Maraging steels						
Weld metal						
Fracture tests						
Fracture strength						
Tensile strength						
Yield strength						
Impact tests						
Ratio analysis diagram (RAD)						
Mechanical properties						

DD FORM 1 NOV 65 1473 (BACK)
(PAGE 2)

Security Classification