NRL Report 6765

Hot Cell Equipment Developed for Remote Tension Test Specimen Evaluations at NRL

J. R. HAWTHORNE AND H. E. WATSON

Reactor Materials Branch
Metallurgy Division

November 1, 1968

NAVAL RESEARCH LABORATORY
Washington, D.C.

This document has been approved for public release and sale; its distribution is unlimited.

CONTENTS

Abstract ii
Problem Status ii
Authorization ii

INTRODUCTION 1

TEST SPECIMEN DESIGNS 1

BASIC TEST EQUIPMENT 3

ACCESSORIES DEVELOPED FOR CONVENTIONAL TENSION TEST MEASUREMENTS 3

- Extensometer Modification and Attachment Fixtures 3
- Device for the Measurement of Total Elongation in the Gage Length 6
- Device for Specimen Diameter Measurements for Reduction of Area and Uniform Strain Determinations 10

ACCESSORIES DEVELOPED FOR SPECIAL TENSION TEST MEASUREMENTS 10

- X-Y Amplification and Recording System 10
- Installation of the Second Load Cell and the Fixture for Remote Calibration 10
- Gage Diameter Sensing Device 13

SUMMARY 18

ACKNOWLEDGMENTS 18

REFERENCES 18

ABSTRACT

Hot cell equipment and experimental methods for ambient temperature testing of highly radioactive tension specimens, as devised for the NRL High Level Radiation Laboratory (HLRL), are described. Auxiliary equipment developed to aid remote testing includes devices for the following operations: attachment of the specimen extensometer, post-test measurements of the specimen diameter for determining the percent reduction of area and uniform strain, and the measurement of gage length elongation. Special data acquisition capabilities of the NRL system include data generation for the experimental development of true stress-natural strain plots. The device for the continuous sensing of minimum specimen diameter and the system for autographic recording of instantaneous load-minimum diameter from test initiation to specimen failure are described in detail.

Present test capabilities were developed primarily for evaluating 0.252-in. and 0.180-in. gage diameter, 1-in.-gage length tensile specimens; however, the extension of this capability to include specimens of different diameters or gage lengths can be readily achieved with only minor modifications to the test equipment and the supporting fixtures. Operations conducted over a two-year period have shown the equipment to be highly reliable and to require only a minimum of routine maintenance.

PROBLEM STATUS

This is an interim report on one phase of the problem; work on other phases continues.

AUTHORIZATION

NRL Problem 63M01-14
Projects AEC AT(49-5)-2110, SF 020-01-05-0858,
RR 007-11-41-5409, and RSA-ERG-3-67

Manuscript submitted June 24, 1968.

HOT CELL EQUIPMENT DEVELOPED FOR REMOTE TENSION TEST SPECIMEN EVALUATIONS AT NRL

INTRODUCTION

Through the years, experimental methods and test apparatus for routine evaluations of nonradioactive tension specimens have become well developed and standardized. Unfortunately, conventional procedures and commercially obtainable equipment generally do not lend themselves well to the remote testing of highly radioactive specimens in shielded containment cells. Specialized items for remote testing on the other hand have only a limited market, and a full line of equipment purposely tailored for hot cell operation has not been developed by instrumentation/test machine manufacturers. As a result, each laboratory conducting radiation effects investigations is left to its own ingenuity in the development of a remote tension test capability. The experimenter generally must devise not only new procedures for such operations but also new and often unique supporting fixtures and devices to achieve both a workable and an accurate tension testing system.

This report describes hot cell equipment and methods developed by NRL for routine tensile properties evaluations at ambient temperature in the High Level Radiation Laboratory (HLRL) (1-3). Equipment and procedures for elevated-temperature tensile testing will be treated in a separate report.

As the radiation-effects experimenter is well aware, test operations in radiation containment cells are much more complex and involved than counterpart evaluations of unirradiated specimens. Problems encountered generally stem from either (a) limited equipment accessibility, (b) remote viewing of operations through heavy-shielding windows, or (c) cumbersome master-slave manipulator tasks. Because of such problems, it is often considered expedient, both in the interest of accuracy and in ultimate time savings, to devise automatic or semiautomatic equipment to perform certain tasks in-cell, regardless of their simplicity out-of-cell. This option was readily exercised by NRL when the alternate procedure in remote testing would involve a series of master-slave manipulator operations.

In the HLRL case, the primary design and development efforts were directed to the requirement for extensometer application and removal and for post-test specimen measurements establishing the percent reduction of area and percent elongation in the gage section. In addition, the continuous X-Y recording of minimum specimen diameter versus applied load from test initiation through to specimen failure was planned to allow the generation of true stress-natural strain plots for irradiated materials. Provisions for this simultaneous measurement entailed the design and development of special experimental equipment without the benefit of either existing prototypes or established guidelines from nonradioactive testing experience.

TEST SPECIMEN DESIGNS

Test specimen designs standardized upon by NRL for irradiation studies are shown schematically in Figs. 1 and 2. Wherever radiation assembly configuration and space limitations allow, the larger 0.252-in. diameter specimen is used. Since many of the

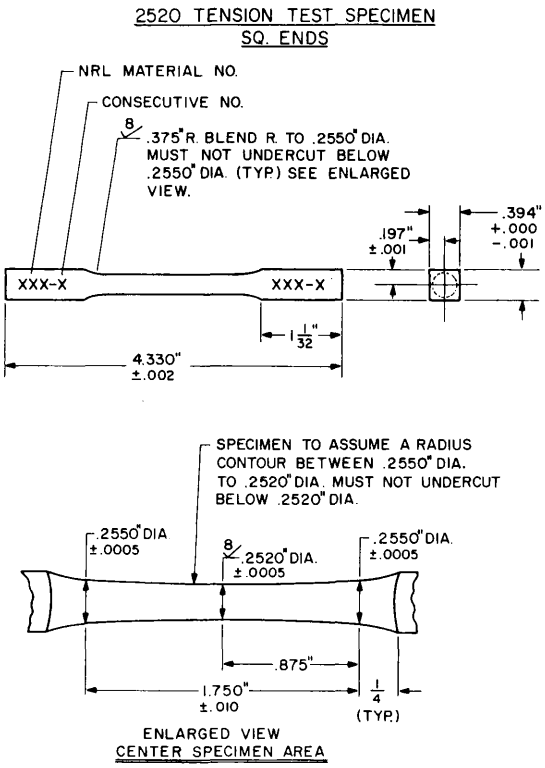

NOTES:
1. 63 except as noted.
2. Lathe centers permitted.
3. Specimen ends to be concentric with specimen ℄ within .002 T.I.R.
4. Example of specimen marking and specimen no. (supplied by Req.) to be engraved 1/8 high

Fig. 1 - Design of the 0.252-in.-gage-diameter tension test specimen

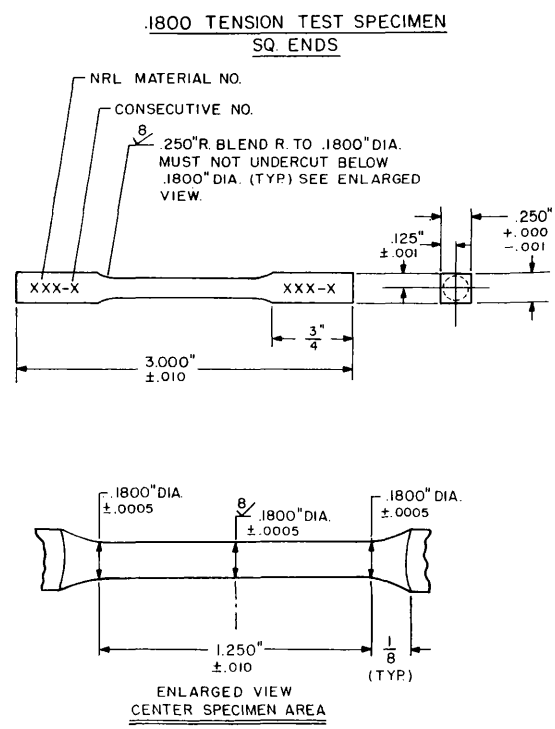

Fig. 2 - Design of the 0.180-in.-gage-diameter tension test specimen

NOTES:
1. 63 except as noted.
2. Lathe centers permitted.
3. Specimen ends to be concentric with specimen ℄ within .002 T.I.R.
4. Example of specimen marking and specimen no. (supplied by Req.) to be engraved 1/8 high

NRL irradiation assemblies are designed primarily to accommodate standard Charpy-V specimens, the configuration of the 0.252-in. diameter specimen was adjusted specifically to allow its direct substitution in these assemblies (Charpy-V cross section times twice the Charpy-V length) when desired. However, gage section dimensions are closely equivalent to that of a standard ASTM tension test specimen (0.250 ± 0.005-in. diameter by 1.250-in. minimum gage length (4)). The subsize, 0.180-in. gage diameter specimen shown in Fig. 2 parallels a specimen design developed by Oak Ridge National Laboratory (ORNL) for those irradiation facilities where the usable volume for the experimental assembly is highly restricted.

BASIC TEST EQUIPMENT

An Instron 10,000-lb-capacity tension tester was selected over other candidate machines, since many adaptations required for remote operation are available as standard equipment options. For example, one equipment option essential to remote operation is the split console design wherein the testing frame, as a unit, is physically detached from the instrumentation console containing calibration, control, and recording functions. In the HLRL installation the two units are interconnected by multiconductor cables which pass through U-tubes under the 3-ft-thick hot cell wall. Additional equipment options specified included: zero gage length crosshead return, automatic crosshead gear shifting system, pneumatically actuated specimen grips, and an automatic deadweight loading system for daily calibration of the load cell mounted in the fixed crosshead. Nonstandard auxiliary equipment specified at the time of purchase involved provisions in the moving crosshead for a second load cell required as one component of the load-minimum diameter measurement system. The auxiliary equipment devised for remote calibration of this second load cell will be described in a separate section.

ACCESSORIES DEVELOPED FOR CONVENTIONAL TENSION TEST MEASUREMENTS

Extensometer Modification and Attachment Fixtures

The electronics of the Instron console and its integral microformer follower system are designed for use with "Baldwin-type" extensometers; therefore, the selection of compatible extensometers is limited. Of these, a Weidmann Model PS-3M extensometer with a 1-in. gage length, 250, 500, and 1000 magnifications ratios, and linear averaging characteristics was chosen for yield-point determinations. While of separable-type construction, this feature was eliminated in early development stages since remote extensometer recoupling using the manipulators proved too difficult and time consuming. Other primary modifications made by NRL were to facilitate the attachment of the extensometer to the specimen. These modifications included the addition of integral gage blocks for establishing the reference (1.000 in.) gage length (Fig. 3), the conversion of gage point screw heads from round to T-bar design (Fig. 4), and the attachment of an aluminum handling bracket. The aluminum bracket, besides serving as a handling piece for manipulator gripping, also serves as a pressure pad for a hold-down device incorporated in the extensometer attachment fixture.

The design and sequential operation of the extensometer attachment fixture (Fig. 5) is illustrated in the series of photographs (Figs. 6a-6d) taken through the hot cell window. In Fig. 6a the square-shouldered specimen has been placed in a V-slot in the fixture and clamped under the action of two opposed wedge blocks attached to an air-cylinder shaft (left) and a capstan-wheel screw (right). The mounting of one wedge block on the

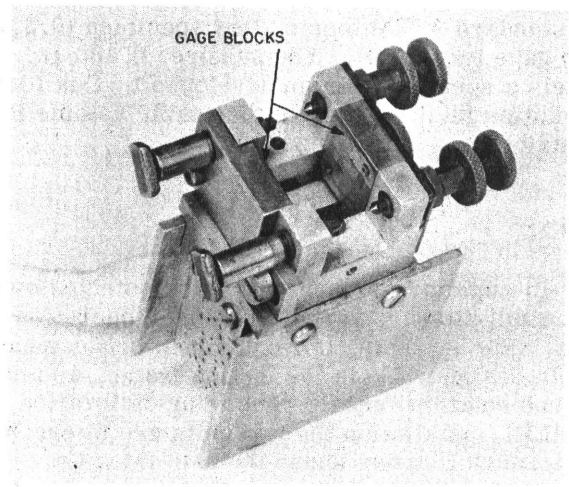

Fig. 3 - Modified linear averaging extensometer for yield point determination showing the addition of integral gage blocks for establishing the reference 1.000-in. gage length

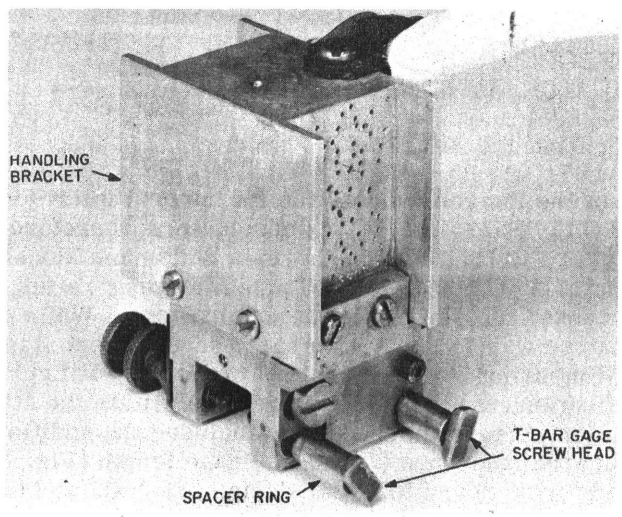

Fig. 4 - Modified extensometer showing the T-bar gage point screw heads and the addition of an aluminum handling bracket. Spacer rings control the depth of the gage point penetration into the specimen.

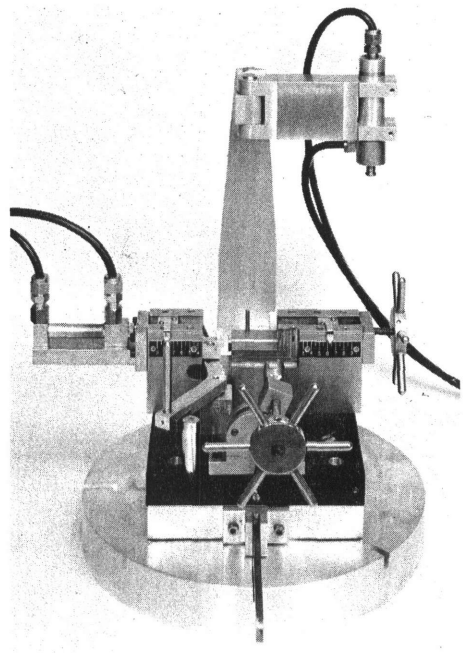

Fig. 5 - The fixture for the attachment of the specimen extensometer

capstan-wheel screw serves two purposes - to act as a stop for the specimen when engaged by the air cylinder-mounted wedge block and to permit compensating adjustments for centering specimens of nonstandard length in the fixture.

In Fig. 6b the extensometer has been deposited in the fixture and the gage-length return bar has been engaged. Permanent magnets serve as simple latching devices to control the open- and-close actions of this bar. In the engaged position the continuous pressure of the bar against the extensometer ensures that, while the gage point screws are being turned in, the extensometer remains closed to the gage block setting. In preservice tests, shadowgraph measurements of gage screw separation of the as-mounted extensometer showed excellent repeatability of the gage setting from specimen to specimen. The swivel-mounted air cylinder, Fig. 6c, applying pressure to the aluminum handling bracket, prevents misalignment of the gage screw points with respect to the long axis of the specimen. Spacer rings on the gage point screws (Fig. 4) control the penetration of the points (indentation depth) into the specimens. By design, the spacer rings also serve as locking collars for the gage point screws. Figure 6d shows the manipulator removing the specimen and the attached extensometer for transfer to the air-actuated grips of the testing frame (Fig. 7).

In practice, the testing of two different specimen configurations necessitated the fabrication of two extensometer attachment fixtures, each tailored to an individual specimen size. However, both units represent only slight modifications to a universal design. On changing between 0.252-in. and 0.180-in. diameter tests, it is necessary only to substitute spacer rings of different length for the proper gage point screw travel and penetration. Initially, a friction clutch on the gage-screw wrench was evaluated as a possible method for controlling penetration depth, but was found somewhat unreliable. With the clutch arrangement, separately engaged locking collars were also needed, which involved an additional step in extensometer attachment procedures.

The modification of the extensometer for conversion to an inseparable type, for reasons given above, requires the detachment of the extensometer from the specimen

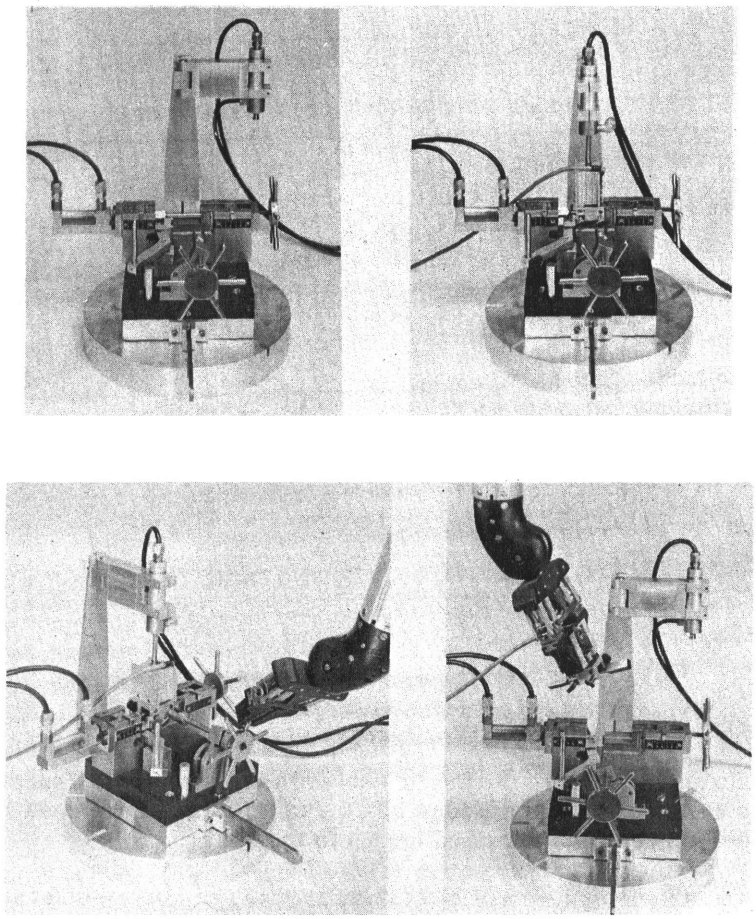

Fig. 6 - Views of the extensometer attachment fixture through the hot cell winding showing (upper left) the tension test specimen centered and clamped in the fixture, (upper right) the extensometer positioned and locked down on the fixture. The gage length return bar has been engaged to close the extensometer to the reference 1.000-in. gage length setting, (lower left) the actual attachment of the extensometer to the tension test specimen, and (lower right) the master-slave manipulator removing the tension test specimen and the attached extensometer from the fixture.

prior to test completion, *i. e.*, specimen fracture. To facilitate its removal, a motor-driven socket wrench was fabricated, consisting of a T-slot socket head mounted on the shaft of a low-speed motor (Fig. 8). The compact, lightweight design is easily gripped and maneuvered by the cell manipulators.

Device for the Measurement of Total Elongation in the Gage Length

The fixture used for the post-test measurement of the increase in the initial 1-in. gage length of the specimen for determinations of percent elongation is shown in Figs. 9a and 9b. The provisions for the clamping and alignment of the broken specimen halves, to be rejoined, are illustrated schematically in Fig. 10. The V-slots in the specimen chucks receive the specimen grip ends which are subsequently clamped by the magnetically

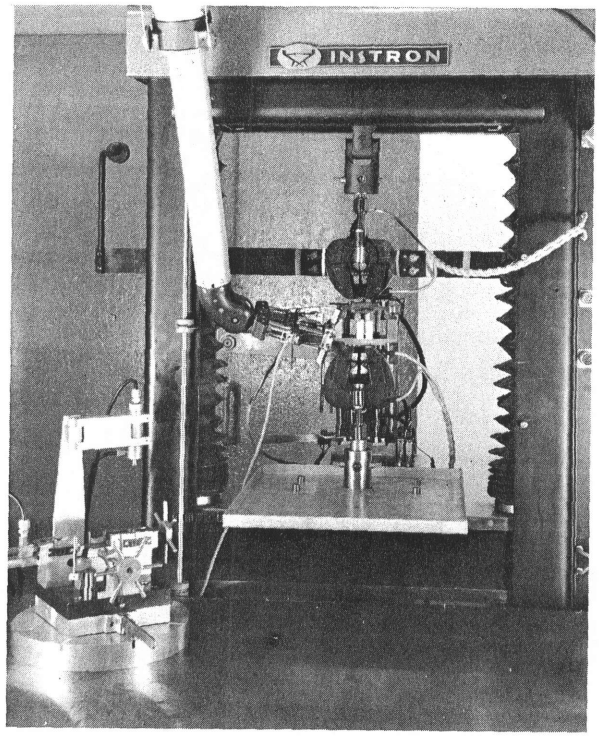

Fig. 7 - View through the hot cell window showing the tension tester frame. The manipulator is in the process of transferring a test specimen and the attached extensometer to the air-actuated tester grips.

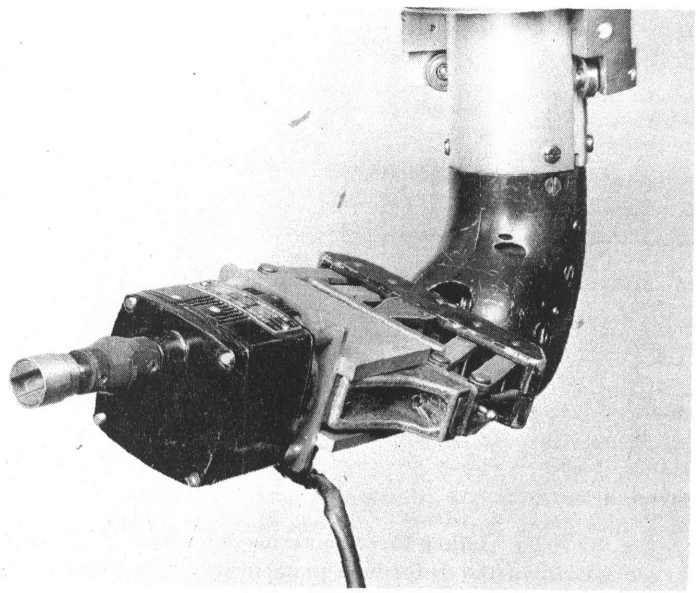

Fig. 8 - The motor driven socket wrench for detaching the extensometer when specimen yield-point has been exceeded

actuated pressure bars. Two sets of slots are provided to accommodate the 0.252-in.- and the 0.180-in.-gage-diameter specimens. The left- and right-hand specimen chucks are mounted on a dovetail slide and a common central shaft for exact alignment of the V-slots. A means for locking the joined specimen halves was provided by permanently affixing (a) the left-hand chuck to the dovetail and (b) the right-hand chuck to the common shaft. A screw, actuated by the locking arm (Fig. 10) in the left-hand chuck, engages the common shaft to complete the locking arrangement.

As observed in Figs. 9a and 9b, the specimen is located between Plexiglas sections mounted on a common carriage assembly which, in turn, rides the dovetail slide. The carriage assembly is motor driven with a manual override (capstan wheel). The exact carriage position is monitored by the dial indicator (Fig. 10). For measurement of gage length elongation, scribe lines on the upper Plexiglas section are centered over first one and then the other gage point indentations introduced by the extensometer. Duplicate scribe lines on the lower Plexiglas section allow three-point sighting, thus eliminating parallax error. Since the scribe lines on each Plexiglas section are spaced exactly one inch apart, dial gage readings of carriage assembly movement allow a direct readout in percent elongation (in./in.). Experience has shown that, even with minimum operator practice, measurements are consistently reproduced within ±0.005 in. Thus, elongation measurements are accurate to ±1/2%

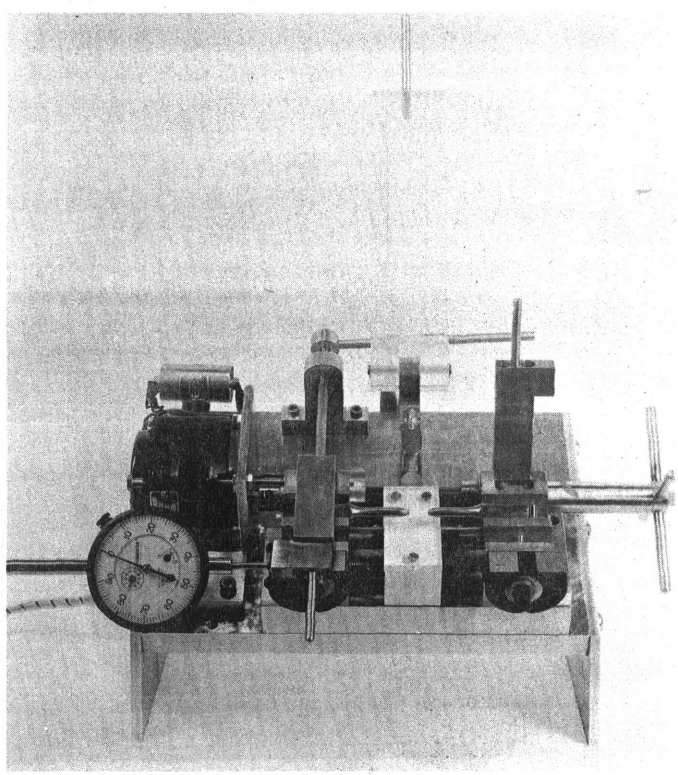

Fig. 9a - The fixture for remote measurement of the total elongation in the reference gage length. The fixture has been opened to receive the broken halves of the tension test specimen. Duplicate scribe lines on the upper and lower Plexiglas sections are visible in this photograph.

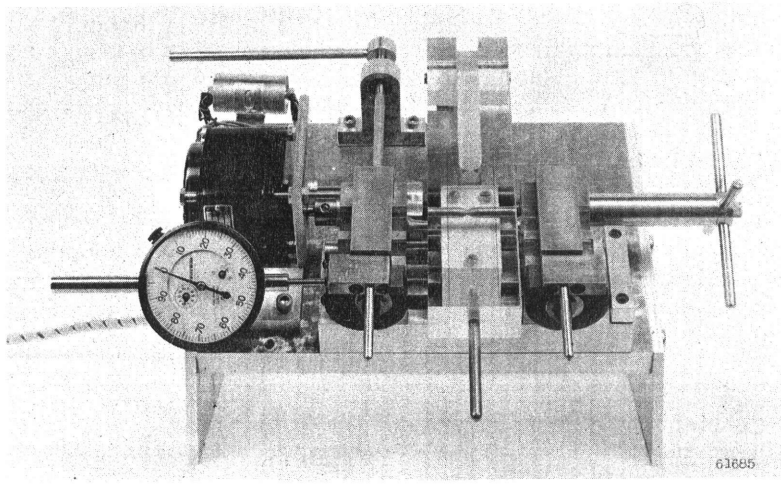

Fig. 9b - Specimen halves have been rejoined as at the instant of failure. The left-hand scribe line on the upper Plexiglas section is shown centered over a gage point indentation introduced by the extensometer. The corresponding scribe line on the lower Plexiglas section is not visible, indicating proper parallax correction. Measurements are consistently reproduced to within ±0.005 in.

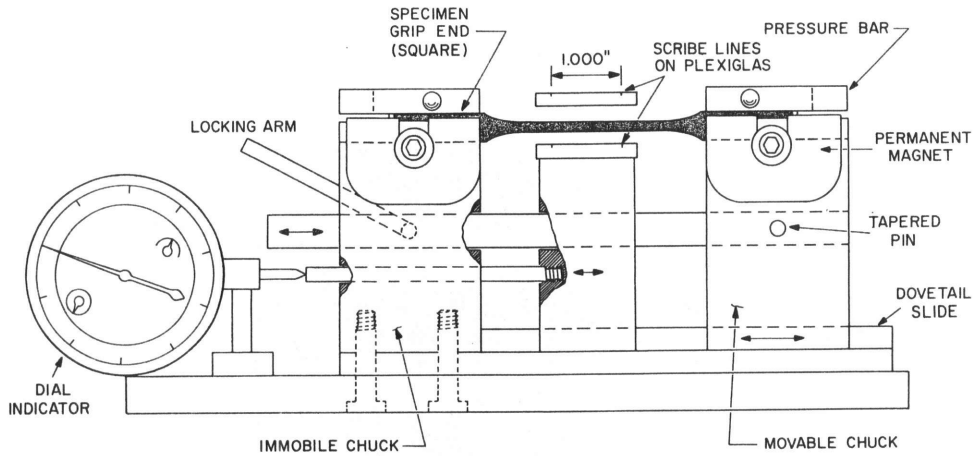

Fig. 10 - Schematic of the fixture for the remote measurement of total gage length elongation, showing the general design and interrelationship of various fixture components. The carriage assembly on which the Plexiglas sections are mounted is driven by a reversible motor (not shown).

Device for Specimen Diameter Measurements for Reduction of Area and Uniform Strain Determinations

The design and operation of the fixture developed for post-test specimen diameter measurements are shown in Figs. 11a and 11b, respectively. Many of the design features of the total elongation measuring device just described are also incorporated here. In this case, however, the measuring devices are stationary, and the interlocked specimen grips are motor driven. While the primary design function of the motor drive is to provide a rapid traverse mode, motor jog switches have been added to minimize the number of manipulator handwheel revolutions required in final position adjustments.

In the interest of direct readout of the gage diameter indicators, thus minimizing required computations, the interchange of specimen holders was adopted rather than the use of holders having twin slots of different depth for the 0.252-in. and 0.180-in gage diameter specimens. If necessary, this interchange can be accomplished remotely using the master-slave manipulators.

ACCESSORIES DEVELOPED FOR SPECIAL TENSION TEST MEASUREMENTS

In response to the need expressed by designers for true stress-natural strain data for irradiated structural materials, special equipment was also developed for procuring autographic records of instantaneous load-minimum diameter curves through to specimen fracture. The recording of instantaneous load-minimum diameter proceeds simultaneously with the conventional tensile properties data acquisition. The required new instrumentation, therefore, included a duplicate X-Y amplification and recording system along with a gage diameter sensing device. In addition, a second load cell, installed in the moving crosshead, was used as an alternative to splitting one load-cell signal between two recorders or to the retransmission of the signal from one recorder to another. While an attractive possibility at first, special electronic circuitry for signal retransmission (or to split the signal) proved both costly and underdeveloped.

X-Y Amplification and Recording System

Rather than fabricate a new X-Y amplification and recording system, the Instron instrument console normally used for nonradioactive specimen tests was employed as a dual-purpose unit. As shown in Fig. 12, this console, with the exception of special remote control features, is almost identical to the primary console. One added feature is the dual microformer input adapter for two transducer inputs. The function of this adapter is discussed later in conjunction with the gage diameter sensing device. Other modifications to the console were not required. Thus, changeover from hot cell to out-of-cell testing can be readily accomplished.

Installation of the Second Load Cell and the Fixture for Remote Calibration

The installation of the second load cell on the moving crosshead is shown in Fig. 13. Since provisions for this installation were specified at the time of purchase, the cost for crosshead modification was minimal. A combination tension-compression cell was also specified rather than a pure tension cell, since a combination cell would be more capable of withstanding rapid compression loading at the instant of specimen failure. Further protection against backlash is given by a check nut acting against the crosshead.

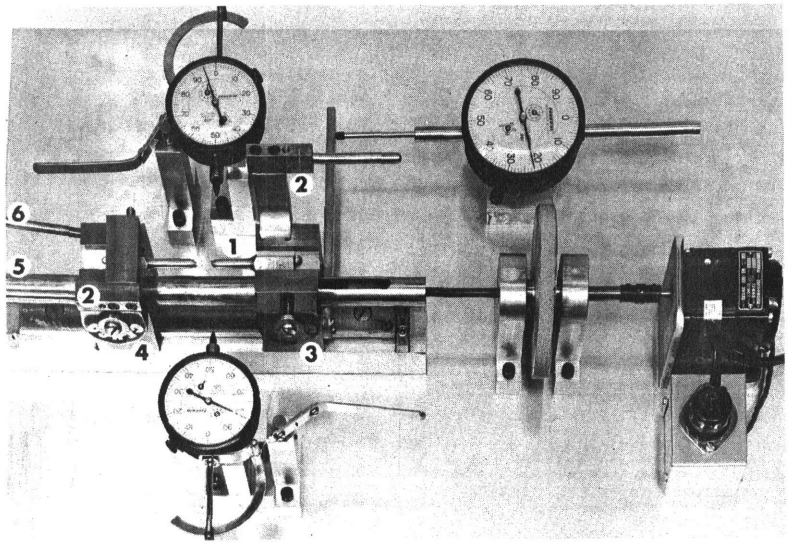

Fig. 11a - Fixture for specimen diameter measurements for reduction of area and uniform strain determinations. The specimen halves (1) are clamped by magnetic latches (2) in the split-specimen holders (3) and (4) on a common shaft (5). Holder (3) is permanently affixed to the shaft, while holder (4) is movable. After the specimen halves are joined, holder (4) is locked to the shaft by the locking arm (6).

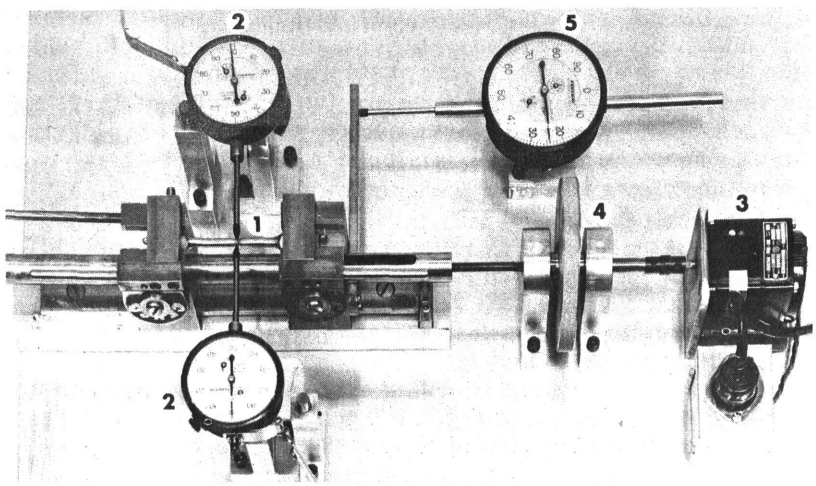

Fig. 11b - Fixture for specimen diameter measurements for reduction of area and uniform strain determinations. The measurement of the minimum diameter of the necked-down region is shown here. The specimen (1) is traversed between the stationary dial indicators (2) by the motor drive (3) or the manipulator handwheel (4). The specimen-movement dial indicator (5) in combination with the diameter indicators (2) permits determining the profile of the necked region.

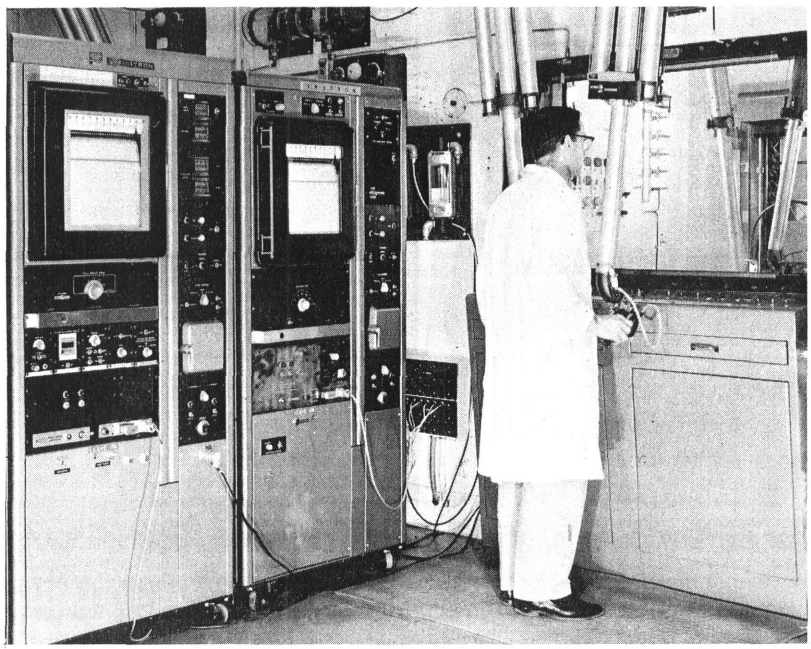

Fig. 12 - Operating face of the remote tension test cell showing the primary instrumentation console (left unit), which is specially equipped for remote test operations, and the secondary console (right unit), which can be used independently for non-radioactive specimen testing. Recorder 1 is used for conventional load-elongation data acquisition, while Recorder 2 provides an autographic record of instantaneous load-minimum specimen diameter through to specimen failure.

While the described arrangement has proven very satisfactory, the mounting of an auxiliary load cell beneath the crosshead somewhat reduces the allowable crosshead travel which may be an impediment in testing long specimens (> 2-in. gage length). Furthermore, the modification of the moving crosshead of existing machines to accommodate a second load cell may prove difficult in the field. However, a system of two redesigned load cells in tandem for installation in the fixed (upper) crosshead has recently been developed by the manufacturer in response to requests from other laboratories for a dual load cell arrangement similar to NRL's. The tandem system, besides being adaptable to any existing machine, does not reduce the allowable crosshead travel.

The remotely operable deadweight loading system provided for routine calibration of the secondary load cell is shown in Fig. 13 in the disengaged position. The system is mounted on the movable crosshead and is comprised of a level arm having a 2:1 mechanical advantage, a 50-lb weight (for 100-lb calibration), and a cam coupled to an air cylinder for remote level actuation. The level arm is pivoted on precision bearings as is the self-aligning yoke which contacts a collar on the load-cell shaft. A four-way solenoid valve for air-cylinder control completes the list of system components.

Gage Diameter Sensing Device

Basic operational requirements established for the design of the gage diameter sensing device included (a) the capability for continuous sensing and automatic recording of the minimum specimen diameter through to fracture, (b) the direct compatibility of sensor input and output signals with the Instron amplification and recording systems, (c) the capability for traversing the specimen gage length for the exact location of the specimen necking region, (d) the capability for retracting the sensing device from the specimen grip area to facilitate specimen insertion and removal, and (e) a fully electric (or pneumatic) remote control for nondependency on manipulator operations. In addition, the device was to have sufficient sensitivity to measure gage diameter changes of 0.0005 in. while being rugged enough for long-term, maintenance-free service.

The unit developed to the above specifications is shown partially instrumented in Figs. 14a through 14c and as-installed on the moving crosshead in Fig. 15. Descriptions of the various components and their sequential functions are given by the captions of Figs. 14a and 15. External control switches and wiring for operation of the unit are shown schematically in Fig. 16. As noted in Fig. 14a, twin microformers (Wiedemann Model MC-2) are installed on the feeler arms for extended range capability (0.252-in. to 0.096-in. diameter). The dual microformer input adapter for two transducer inputs, mentioned earlier as an addition to the instrumentation console, permits independent calibration of the two microformers. Instrumentation calibration checks using specimen standards having a series of known stepped diameters are routinely performed each day. Magnification ratios developed with the two microformers are 75, 150, and 300X, and 100, 200, and 400X, respectively. Higher magnification ratios are possible by increasing the recorder gear ratios or by increasing the mechanical magnification seen by the microformer.

As noted in Fig. 6 (lower right), the extensometer for conventional yield point measure ments, when attached to the test specimen, allows only limited access for the gage diamet feeler arms. Conversely, the removal of the extensometer from the specimen when the yield point is exceeded is more difficult with the feeler arms engaged. While not posing any insurmountable difficulties, these impediments are circumvented in normal operations by the following test procedure. First, the specimen (without the extensometer attached) is placed in the specimen grips, the gage diameter measurement fixture engaged for establishing the reference diameter point on the chart and then retracted. Second, the specimen is removed for the attachment of the extensometer, reinserted in the specimen grips, and subsequently loaded to a point slightly past its yield strength. Third, the crosshead motion is interrupted for the removal of the extensometer and the engagement of the specimen diameter measurement fixture. At this point the X-Y recorder served by the extensometer is converted to synchronous chart drive (time drive corresponding to crosshead speed). Fourth, the crosshead motion is reinitiated and continued without interruption through to the termination of the test. Thus, this somewhat modified test procedure, while considerably reducing the required operator finesse, involves the sacrifice of only a small portion of the complete load-minimum diameter curve, *i.e.*, zero load to yield-point load.

Schematic presentations of chart records obtained from both X-Y recorders are given in Fig. 17. During the fourth stage of test operations the feeler-arm carriage remains stationary at midgage length until maximum load is reached (limit of uniform strain), after which the carriage drive is engaged to scan the entire length of the specimen to locate the segment in which necking has initiated. When this point is established, carriage drive is confined to a continuous traverse of the necking region for monitoring the minimum diameter. As illustrated in Fig. 17, this results in a series of pips on the load-diameter chart as the feelers first descend into and then leave the minimum diameter. A smooth curve drawn through the peak indications, then, represents the instantaneous load-minimum diameter trace.

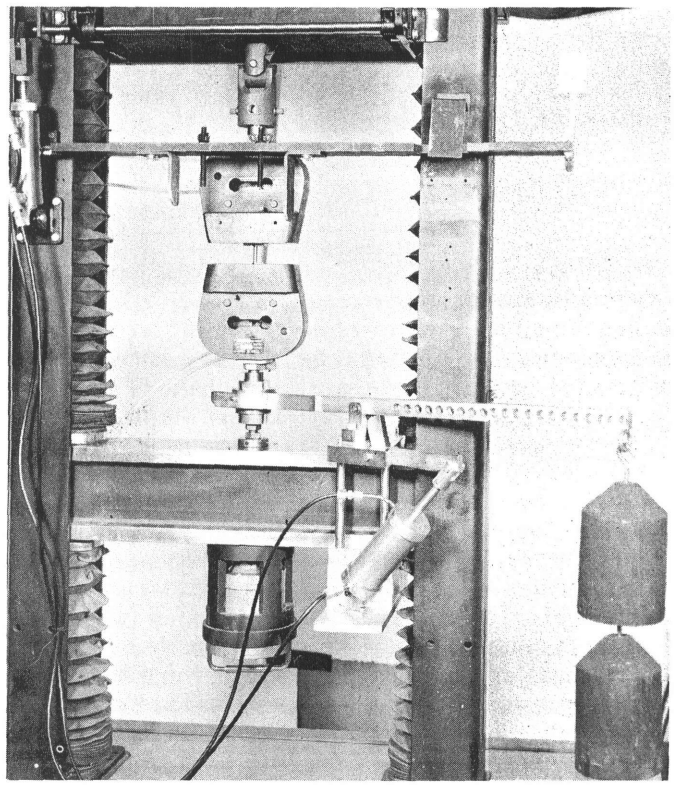

Fig. 13 - Rear view of the in-cell testing frame showing the installation of the second load cell on the moving crosshead and the installation of the deadweight loading fixture for remote calibration of the cell. The air cylinder which operates the deadweight calibration system for the upper load cell is also visible.

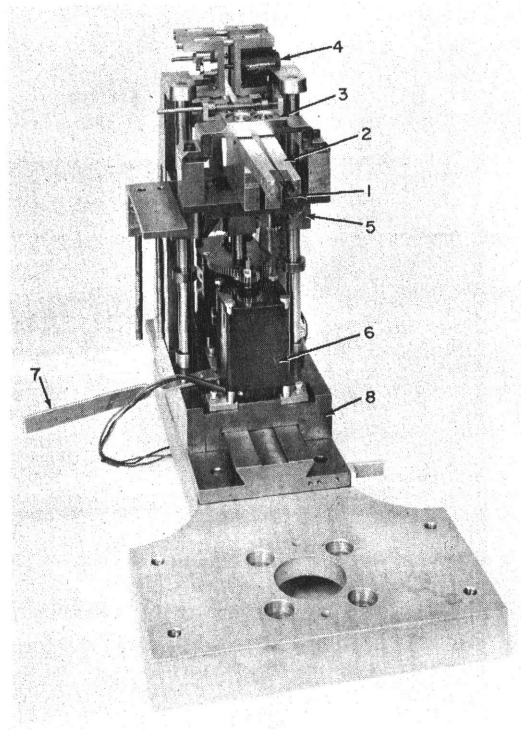

(a)

Fig. 14 - Device for continuous sensing and recording of tension specimen minimum diameter during remote testing. (a) Front view, the separation of the specimen "feelers" (1) of the feeler arms (2) mounted on precision ball bearing pivots (3) is sensed by a microformer (4) whose signal response is fed to an external X-Y recorder. The twin microformers provide extended range capabilities. Vertical movement of the feeler arm carriage (5) is controlled by a carriage drive motor (6). The two carriage drive motors for high- and low-speed vertical traverse rates are selectively engaged by the lever arm (7). The device is mounted on a motorized dovetail carriage (8) for retracting the unit at the termination of each test. (b) Side view and (c) top view.

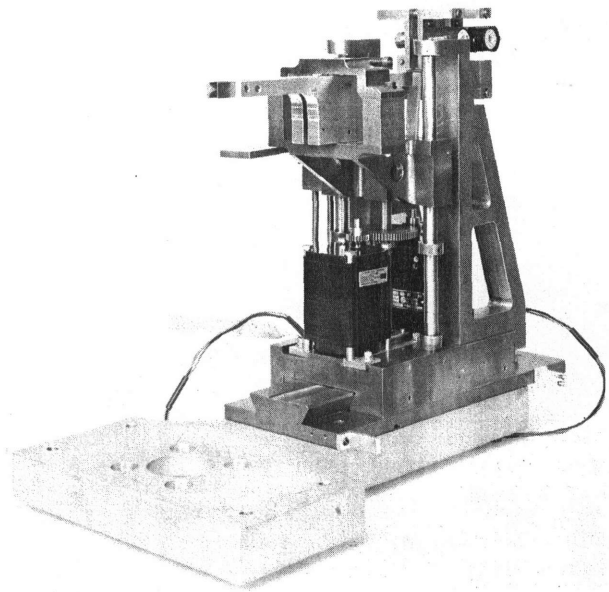

(b)

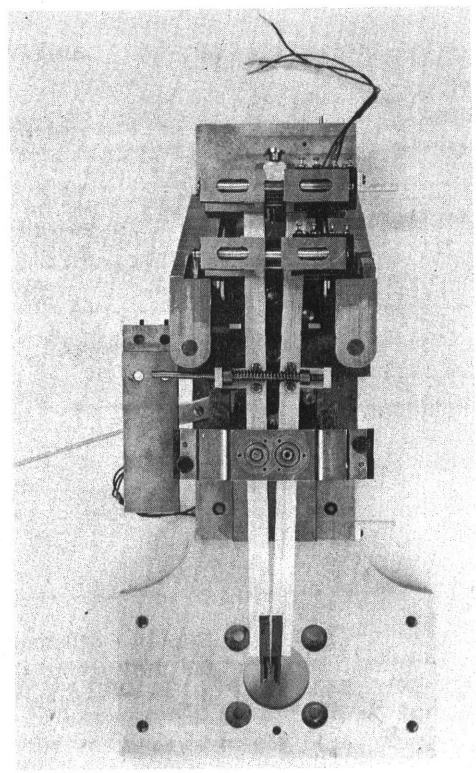

(c)

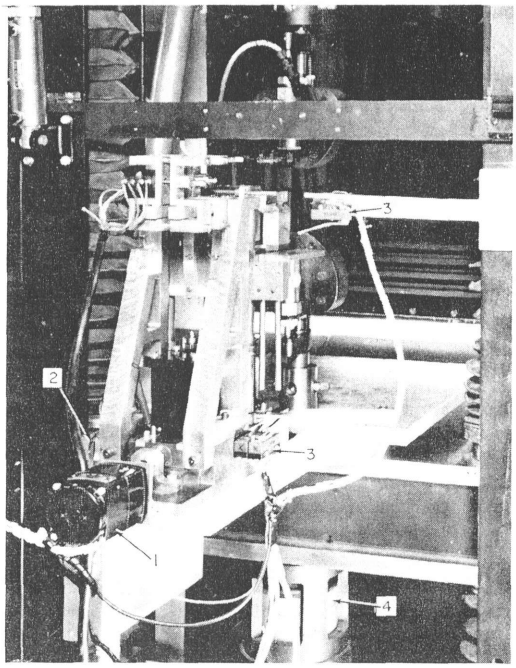

Fig. 15 - Mounting of the device for tension specimen diameter measurements on the moving crosshead of the tension test frame (rear view in-cell), showing the motor drive (1) for the dovetail carriage, the carriage travel limit switches (2), the feeler arm carriage travel limit switches (3) and the second load cell (4) on the moving crosshead. The deadweight calibration fixture serving the second load cell was removed for this photograph.

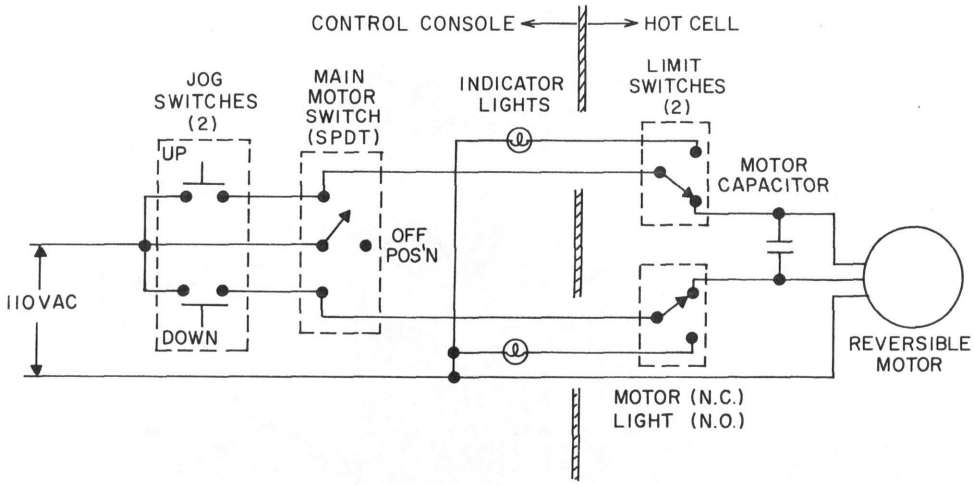

Fig. 16 - Schematic diagram of the electric circuitry for the remote control of the tension specimen gage diameter measurement device

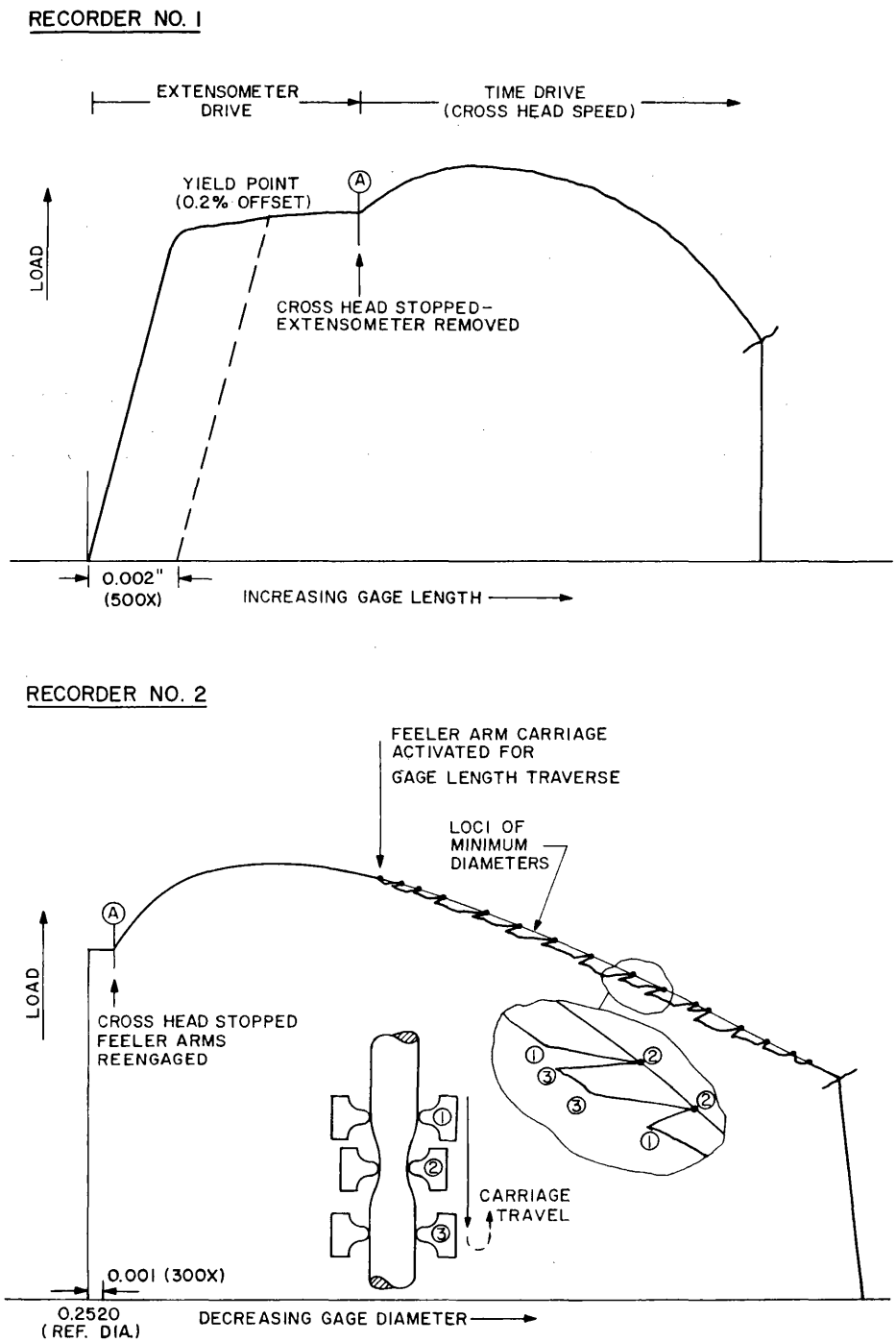

Fig. 17 - The traces developed simultaneously by the two-instrument-system X-Y recorders. The operation and calibration of Recorder 1 of the primary console is independent of that of Recorder 2 in the secondary console. The load-extension trace is shown at the top, and the load-diameter trace is shown at the bottom.

SUMMARY

Hot cell equipment and experimental methods for ambient temperature testing of highly radioactive tension specimens, as devised for the NRL HLRL, have been described and discussed. In addition to conventional tensile properties measurements, data acquisition capabilities include a special system for continuous sensing and autographic recording of instantaneous load-minimum specimen diameter whereby true stress-natural strain relationships can be established experimentally. Detailed descriptions of auxiliary equipment devised to facilitate remote operations or to insure test accuracy have been provided in the interest of possible assistance to other laboratories similarly engaged in developing or updating their remote tension test equipment.

ACKNOWLEDGMENTS

The assistance and contributions of each member of the Reactor Materials Branch toward the design, development, and installation of the remote tension test equipment and supporting fixtures are hereby acknowledged with appreciation. The consultative assistance of Dr. E. P. Klier is particularly appreciated.

REFERENCES

1. Watson, H. E., and Steele, L. E., "The NRL High Level Radiation Laboratory, Part I, Structural Design and Construction Features," Nuclear Engineering and Design 3 3(No. 2):299-307 (1966)

2. Watson, H. E., "The NRL High Level Radiation Laboratory, Part II, Laboratory Functions and Equipment," Nuclear Engineering and Design 3(No. 3):439-450 (1966)

3. Watson, H. E., "The NRL High Level Radiation Laboratory, Part III, Operating Experience," Nuclear Engineering and Design 4(No. 1):97-107 (1966)

4. ASTM Standards, Vol 3, p. 124, 1961

Security Classification

DOCUMENT CONTROL DATA - R & D

(Security classification of title, body of abstract and indexing annotation must be entered when the overall report is classified)

1. ORIGINATING ACTIVITY *(Corporate author)* Naval Research Laboratory Washington, D.C. 20390	2a. REPORT SECURITY CLASSIFICATION Unclassified 2b. GROUP

3. REPORT TITLE

HOT CELL EQUIPMENT DEVELOPED FOR REMOTE TENSION TEST SPECIMEN EVALUATIONS AT NRL

4. DESCRIPTIVE NOTES *(Type of report and inclusive dates)*
A final report on one phase of the problem.

5. AUTHOR(S) *(First name, middle initial, last name)*

J. Russell Hawthorne
Henry E. Watson

6. REPORT DATE November 1, 1968	7a. TOTAL NO. OF PAGES 22	7b. NO. OF REFS 4

8a. CONTRACT OR GRANT NO. NRL Problem M01-14 b. PROJECT NO. RR 007-11-41-5409 c. AEC-AT(49-5)-2110 d. USA-ERG-19-66 USA-ERG-7-68	9a. ORIGINATOR'S REPORT NUMBER(S) NRL Report 6765 9b. OTHER REPORT NO(S) *(Any other numbers that may be assigned this report)*

10. DISTRIBUTION STATEMENT

This document has been approved for public release and sale; its distribution is unlimited.

11. SUPPLEMENTARY NOTES	12. SPONSORING MILITARY ACTIVITY Department of the Navy (Office of Naval Research), Washington, D.C., 20360, Department of the Army, (USAERG, Nuclear Power Field Office), Fort Belvoir, Virginia 22060

13. ABSTRACT

Hot cell equipment and experimental methods for ambient temperature testing of highly radioactive tension specimens, as devised for the NRL High Level Radiation Laboratory (HLRL), are described. Auxiliary equipment developed to aid remote testing includes devices for the following operations: attachment of the specimen extensometer, post-test measurements of the specimen diameter for determining the percent reduction of area and uniform strain, and the measurement of gage length elongation. Special data acquisition capabilities of the NRL system include data generation for the experimental development of true stress-natural strain plots. The device for the continuous sensing of minimum specimen diameter and the system for autographic recording of instantaneous load-minimum diameter from test initiation to specimen failure are described in detail.

Present test capabilities were developed primarily for evaluating 0.252-in. and 0.180-in. gage diameter, 1-in.-gage length tensile specimens; however, the extension of this capability to include specimens of different diameters or gage lengths can be readily achieved with only minor modifications to the test equipment and the supporting fixtures. Operations conducted over a two-year period have shown the equipment to be highly reliable and to require only a minimum of routine maintenance.

DD FORM 1 NOV 65 1473 (PAGE 1)

S/N 0101-807-6801

Security Classification

Security Classification

14. KEY WORDS	LINK A ROLE	LINK A WT	LINK B ROLE	LINK B WT	LINK C ROLE	LINK C WT
Hot cell equipment						
Remote tension testing						
Tensile properties measurement						
Radioactive specimen evaluations						
Post irradiation tension testing						
Remote extensometer						
Gage diameter sensing equipment						
True stress-strain properties						

DD FORM 1 NOV 65 1473 (BACK)
(PAGE 2)

Security Classification