NRL Report 6897

Design of a Digital Control Unit for an NRL Receiving System

JOSEPH M. ABELL

Intercept and Signal Processing Branch
Electronic Warfare Division

August 1, 1969

NAVAL RESEARCH LABORATORY
Washington, D.C.

This document has been approved for public release and sale; its distribution is unlimited.

CONTENTS

Abstract	ii
Problem Status	ii
Authorization	ii
ABBREVIATIONS	1
INTRODUCTION	2
BASIC APPROACH	2
SYSTEM IMPLEMENTATION	3
Sampling Unit	3
Control Unit	3
Standard Reference Signal Unit	5
Comparison Unit	5
THEORETICAL OPERATING CHARACTERISTICS	6
MEASURED OPERATING CHARACTERISTICS	10
CONCLUSIONS	12

ABSTRACT

To provide required receiver tuning accuracy for a system being developed by NRL, a digital control unit for the receiver local oscillator was designed and constructed. The approach used a voltage-controlled oscillator in a closed-loop feedback system. The requirements were to control the receiver local oscillator from 175 MHz to 180 MHz in 1-kHz increments with provisions for both manual or computer control of the receiver.

The digital control unit was breadboarded, using integrated circuits as the building blocks. The basic principle used to establish control of the local oscillator was the comparison of phase between a standard reference signal and a function of the local oscillator frequency. The error voltage established from this comparison was then used to control the local oscillator.

PROBLEM STATUS

This is a final report on one phase of the problem; work is continuing on other phases.

AUTHORIZATION

NRL Problem R06-29

Manuscript submitted February 11, 1969.

DESIGN OF A DIGITAL CONTROL UNIT FOR AN NRL RECEIVING SYSTEM

ABBREVIATIONS

C_a	actual number of cycles counted
C_d	number of cycles desired
C.O.	counter output
DVCO	digital voltage controlled oscillator
f_a	actual frequency
f_{co}	crystal oscillator frequency
f_d	frequency desired
FF1	output flip-flop one
FF8	output flip-flop eight
Δf_{rf}	rf error
f_{rfd}	desired rf
f_{vco}	voltage-controlled oscillator frequency
f_{100}	100-kHz reference oscillator
i-f	intermediate frequency
LO	local oscillator
P	required preset number
PW_e	pulse-width error
rf	radio frequency
R.P.	reference pulse
S_{co}	stability factor of crystal oscillator
SP	setting pulse
S_r	stability factor for 100 kHz reference oscillator
T_a	actual time
T_s	stable sample time
VCO	voltage-controlled oscillator

INTRODUCTION

The capability to preset accurately to one of several hundred closely spaced rf channels without the necessity of having the operator "fine tune" for optimum performance was deemed necessary for a system being developed by NRL. To satisfy this requirement, a digital control unit was designed for the local oscillator (LO) of the receiver. The unit provides a tuning range of 5 MHz in 1-kHz increments in the vhf region. The basic approach which has been developed uses a voltage-controlled oscillator (VCO) in a closed-loop feedback system. The frequency to which the receiver is tuned is adjusted automatically to the desired value by an error voltage derived from the digital comparison of the actual VCO frequency, a function of the receiver LO frequency, to the desired VCO frequency, a function of the digital control unit setting.

BASIC APPROACH

The basic approach is illustrated in block diagram form in Fig. 1. The following principle is used to control the VCO. First, a stable sample time is established so that the number of cycles over this sample time is a function of the VCO frequency. This relationship can be expressed in equation form by

$$C_d = T_s f_d, \tag{1}$$

where

C_d = number of cycles desired,

T_s = stable sample time,

and

f_d = frequency desired.

By controlling the number of cycles counted for each sample time, a method of controlling the frequency is established in the following manner. Since C_d is a known constant, then for any frequency other than f_d a time exists such that

$$C_d = T_a f_a, \tag{2}$$

where

C_d = number of cycles desired,

T_a = actual time,

and

f_a = actual frequency.

Setting Eqs. 1 and 2 equal yields

$$T_a = T_s \frac{f_d}{f_a}. \tag{3}$$

The difference in sample time and actual time is

$$(T_s - T_a) = T_s\left(1 - \frac{f_d}{f_a}\right) = PW_e. \tag{4}$$

This time difference, denoted as the pulse width error PW_e, can be used to establish an error voltage, which is a function of the desired and actual frequencies. The means for

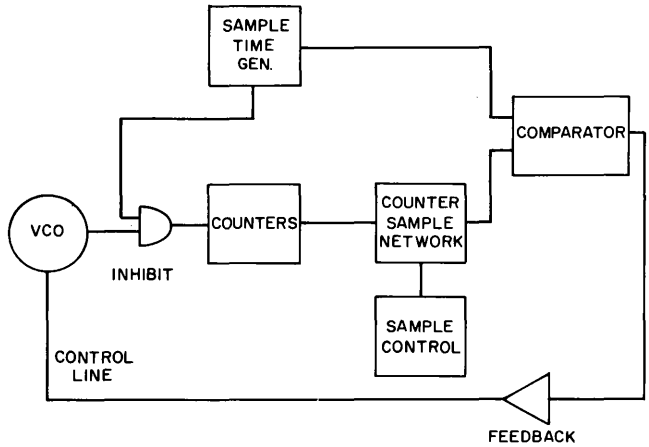

Fig. 1 - Basic approach for VCO control

establishing the error voltage is simply a sample-and-hold circuit which charges or discharges a capacitor depending on the frequency error.

SYSTEM IMPLEMENTATION

The digital control unit, illustrated in block diagram form in Fig. 2, was implemented in the following manner.

Sampling Unit

To use off-the-shelf integrated circuits, a maximum counting rate of 20 MHz was assumed feasible for the sampling unit. Since a system stability of ±1 kHz was required, a sample time of 5 msec was considered adequate for T_s. The total count for the above combination is C_d (max) = 10^5; five decade counters could be used to implement the maximum count required. To control the frequency, the sampling unit must be able to determine when a specific number of cycles has been reached. To do this the decade counters were preset to the 10^5 complement of the total number of cycles desired per sample time T_s. The sampling unit was then set to change state when 99999 was reached on the decade counters. A detailed block diagram of the sampling unit is shown in Fig. 3.

Control Unit

The control unit established the required preset number for the sampling unit as a function of the desired rf. The equation for desired rf is given by

$$f_{rfd} = f_{vco} + f_{co} - i\text{-}f, \tag{5}$$

where

f_{rfd} = desired rf,

f_{vco} = VCO frequency

and

f_{co} = crystal oscillator frequency.

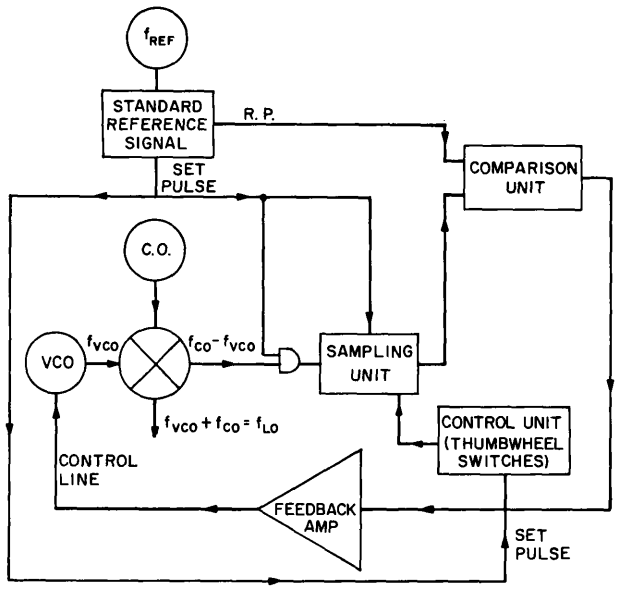

Fig. 2 - Digital control unit

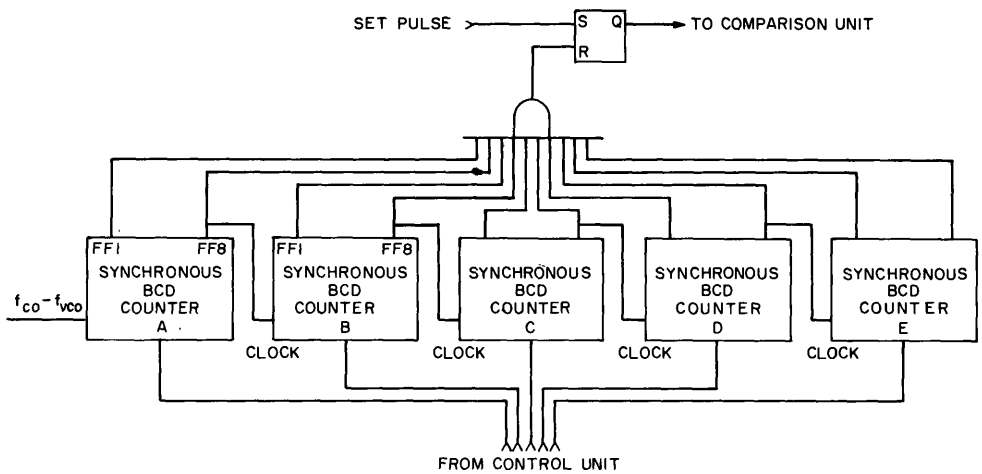

Fig. 3 - Sampling unit

Since

$$f_d = f_{co} - f_{vco},$$

then

$$f_{rfd} = 2f_{co} + f_d - i\text{-}f. \tag{6}$$

Since f_{co} and $i\text{-}f$ are constant, the desired rf is a direct function of the desired sampling unit input frequency, and Eq. 6 becomes

$$f_{rfd} = K + f_d. \tag{7}$$

The required preset number P is given by

$$P = 10^5 - f_d T_s$$

or

$$P = 10^5 - KT_s - f_{rfd} T_s. \tag{8}$$

Both K and T_s are known constants, so P is a linear function of f_{rfd}. The logic necessary to solve Eq. 8 is contained in the control unit.

Standard Reference Signal Unit

The stable reference time T_s is generated by this unit. The pulse waveform generated is shown in Fig. 4. Along with T_s this unit also generates the setting pulse SP, which resets the system after each 5.5 msec of operation. Figure 5 illustrates the standard reference signal unit in block diagram form. The set pulse SP is given in logic equation form as

$$SP = (FF1)(FF8)(C.O.)(R.P.).$$

Comparison Unit

The comparison unit, shown in Fig. 6, derives a feedback voltage proportional to the time difference of the leading edges of the reference pulse and the sampling unit output pulse. This time difference is used to charge or discharge the sample-and-hold network to provide an error-correcting voltage for the VCO.

Fig. 4 - Reference pulse waveform

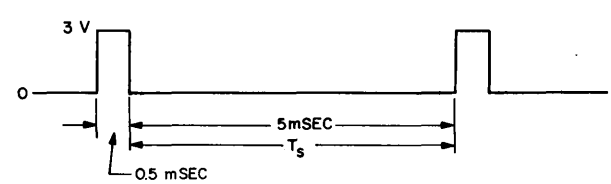

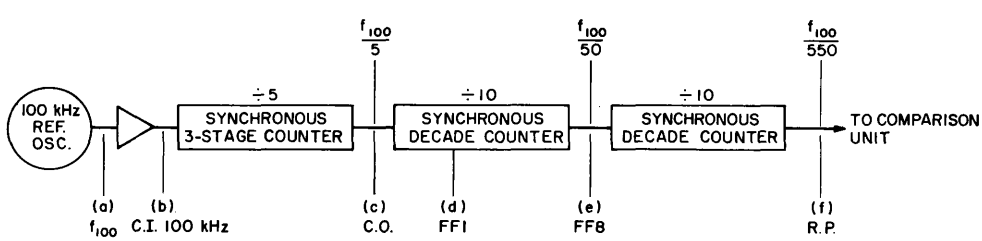

Fig. 5 - Standard reference signal unit

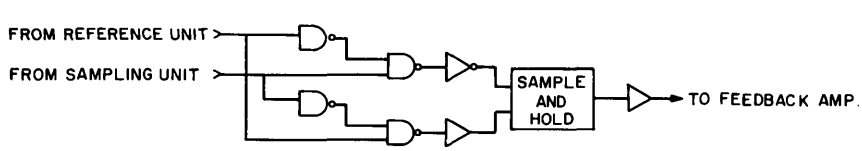

Fig. 6 - Comparison unit

THEORETICAL OPERATING CHARACTERISTICS

The theoretical rf to which the receiver tunes is $f_{rfd} = f_d + 2f_{co} - i\text{-}f$. The actual counter frequency f_a is a function of the desired counter frequency f_d and the sample time T_s. Noting that the actual number of cycles counted during each sample time is a known function and is equal to a predetermined number, then

$$C_a = C_d = T_a f_a = T_s f_d,$$

where

C_a = actual number of cycles counted,

C_d = number of cycles desired,

T_a = actual time of sampling unit change of state,

T_s = sample time,

f_a = actual counter input frequency,

and

f_d = desired counter input frequency.

Since the error voltage is a function of the time difference $T_s - T_a$, then let $PW_e = T_s - T_a$. In final form

$$PW_e = T_s \left(1 - \frac{f_d}{f_a}\right), \tag{4}$$

where

T_s = sample time,

f_d = desired counter frequency,

and

f_a = actual counter frequency.

Solving Eq. 4 for f_a yields

$$f_a = \frac{f_d}{1 - \left(\frac{PW_e}{T_s}\right)}. \tag{9}$$

Solving for the actual rf, f_{rfa}, yields

$$f_{rfa} = \frac{f_d}{\left[1 - PW_e \frac{f_{100}}{K}\right]} + 2f_{co} - f_{i\text{-}f}. \tag{10}$$

Equation 10 gives the rf to which the receiving system is tuned as a function of the variables of the system.

The stability of the receiving system is a function of the stability of the 100-kHz reference oscillator and the crystal oscillator as well as the gain of the feedback loop. Defining

$$\Delta f_{rf} = f_{rfd} - f_{rfa}, \tag{11}$$

where

$$\Delta f_{rf} = \text{rf error},$$

$$f_{rfd} = \text{desired rf},$$

and

$$f_{rfa} = \text{actual rf},$$

then the stability of the system, excluding i-f stability, is given by

$$\Delta f_{rf} = \frac{f_d\,[-200PW_e\,(1 + S_r) \mp S_r]}{1 - 200PW_e(1 \pm S_r)} \mp 2f_{co}S_{co}, \tag{12}$$

where

Δf_{rf} = rf error,

PW_e = pulse-width error,

S_r = stability factor of 100 kHz reference oscillator,

S_{co} = stability factor of crystal oscillator,

and

f_{co} = desired crystal oscillator frequency.

A plot of Eq. 12 for the following conditions is shown in Fig. 7:

$$S_r = S_{co} = 0,$$

$$f_d = 19 \text{ MHz},$$

$$f_d = 15 \text{ MHz},$$

and

$$f_d = 1 \text{ MHz}.$$

It is noted that Δf_{rf} plots as a hyperbola with the vertical asymptote at $PW_e = 5$ msec and the horizontal asymptote at f_d, where f_d is the desired counter frequency. In practice the vertical asymptote value is never approached, because the maximum counting frequency is 20 MHz, and the minimum desired frequency $f_{d\,(min)}$ is 15 MHz. Therefore, $PW_{e\,(max)}$ equals 1.25 msec. The horizontal asymptote is limited by the standard reference waveform which limits minimum PW_e to -0.5 msec.

In considering overall system stability for very small values of PW_e, close to the actual operating conditions of the feedback system, Eq. 12 reduces to

$$\Delta f_{rf} = f_d\,[-200PW_e(1 \pm S_r) \mp S_r] \mp 2f_{co}S_{co}$$

or

$$\Delta f_{rf} = -200\,f_dPW_e(1 \pm S_r) \mp (f_dS_r + 2f_{co}S_{co}). \tag{13}$$

Note that Eq. 13 is simply that of a straight line,

$$y = ax + b,$$

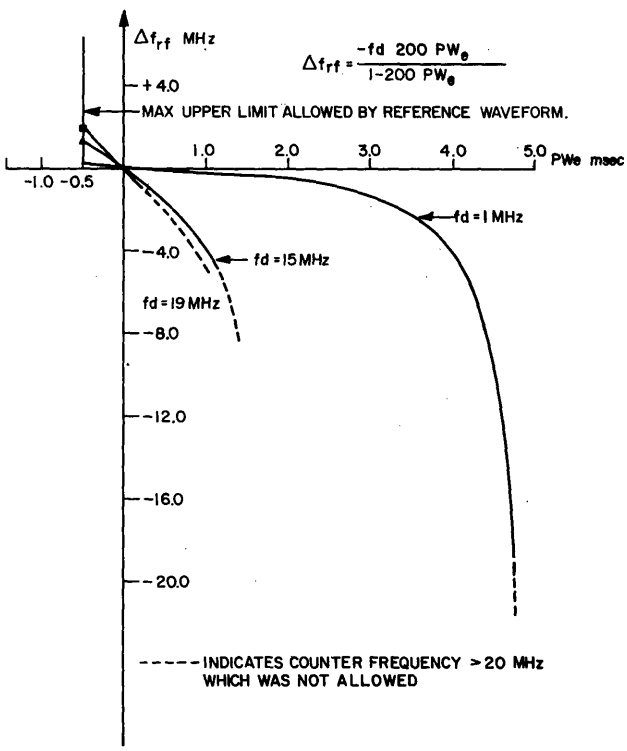

Fig. 7 - Radio frequency tuning error Δf_{rf} as a function of PW_e

where

$$a = -200\, f_d(1 \pm S_r)$$

and

$$b = \mp(f_d S_r + 2 f_{co} S_{co}).$$

It is now obvious that the effect of the standard reference oscillator is to change the slope of the line as well as the Δf_{rf} intercept point, while the crystal oscillator stability affects only the Δf_{rf} intercept point, as would be expected. These results are shown graphically in Fig. 8 for $f_d = 19$ MHz. The theoretical operating condition is shown on the solid line. This implies $S_r = S_{co} = 0$. The dashed line indicates an example for which $S_r = 10^{-2}$, $f_{co} = 100$ MHz, and $S_{co} = 0.5\ (10^{-6})$.

The overall stability requirement is ±1 kHz from the desired rf. In analyzing this condition, let $\Delta f_{rf} = 1$ kHz in Eq. 13, then

$$1000 = 200\, f_d PW_e\ (1 \pm S_r) \pm (f_d S_r \pm 2 f_{co} S_{co}).$$

Letting $f_d = 20$ MHz and $f_{co} = 100$ kHz, then

$$1 = -4(1 \pm S_r)\ PW_e\ (\text{nsec}) \pm (20\ \text{MHz}\ S_r + 200\ \text{MHz}\ S_{co}).$$

A family of curves can now be plotted for S_r versus S_{co} for specified values of PW_e. Four of the family are shown in Fig. 9 for the worst-case condition of $S_r > 0$ and $S_{co} > 0$. By establishing the maximum PW_e that occurs when the feedback loop is locked in, the maximum allowable values of S_r and S_{co} can be determined from Fig. 7.

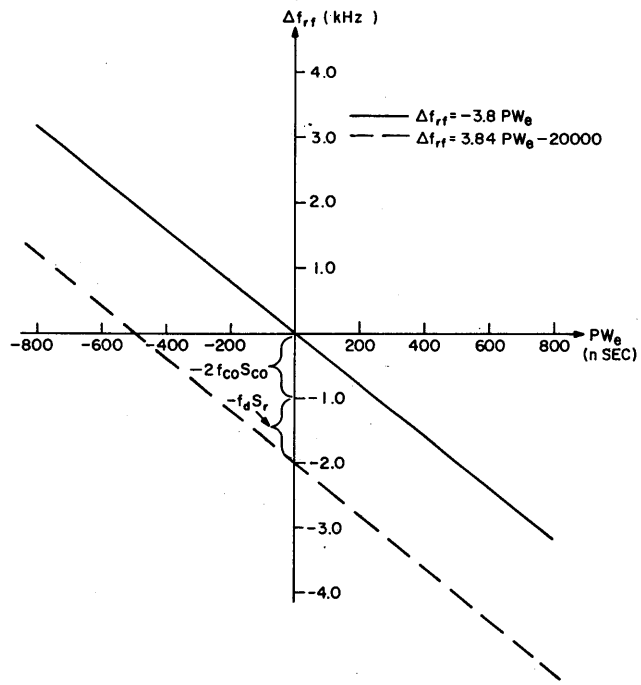

Fig. 8 - Radio frequency tuning error Δf_{rf} as a function of small pulse-width errors

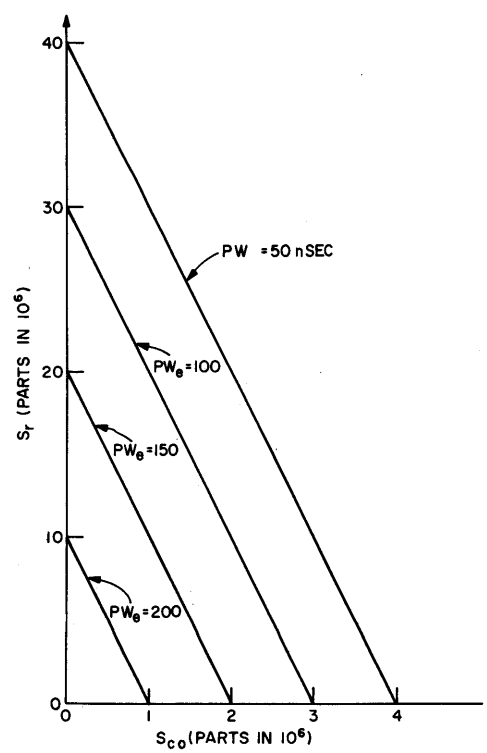

Fig. 9 - Required stability of reference oscillator S_r versus required stability of crystal oscillator S_{co} for specified pulse-width errors PW_e

MEASURED OPERATING CHARACTERISTICS

Two parameters of importance are the output spectrum over the band of interest and the incidental FM associated with the feedback loop.

The frequency spectrum of the DVCO was measured using a HP-8551A spectrum analyzer. The results are shown in Figs. 10 through 12. Figure 10a shows the DVCO output over a band of 10 MHz. Figure 10b indicates the sensitivity of the measuring system by establishing a -80 dBm reference for the same analyzer control settings.

Figure 11a is the DVCO output over a 300 kHz band, and Fig. 11b shows a -96 dBm reference for the same spectrum analyzer settings as Fig. 11a. Figure 12 shows the DVCO output at the center of the trace with the Boonton 202H signal generator set 4.5 MHz from DVCO frequency at -69 dBm. There was no indication of any spurious signals from the DVCO in the band of interest. It was noted that the harmonic level of the VCO was not a function of the digital control unit. The harmonic levels of the VCO were the same when either a stable power supply was used as the control voltage or the VCO was controlled by the digital system.

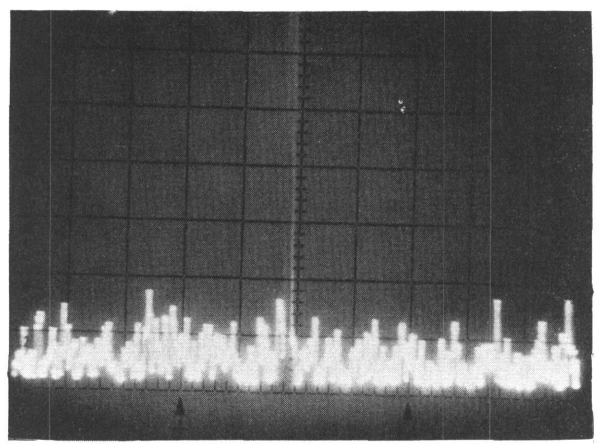

a. DVCO output

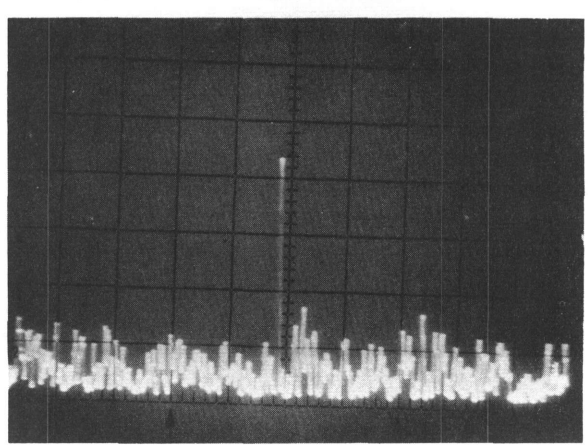

b. Boonton 202H output

Fig. 10 - DVCO rf output and Boonton 202H signal generators (same DVCO rf) at -80 dBm over 10 MHz bandwidth

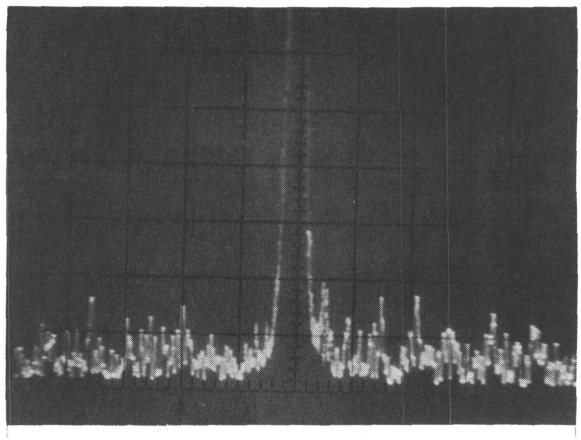

a. DVCO output

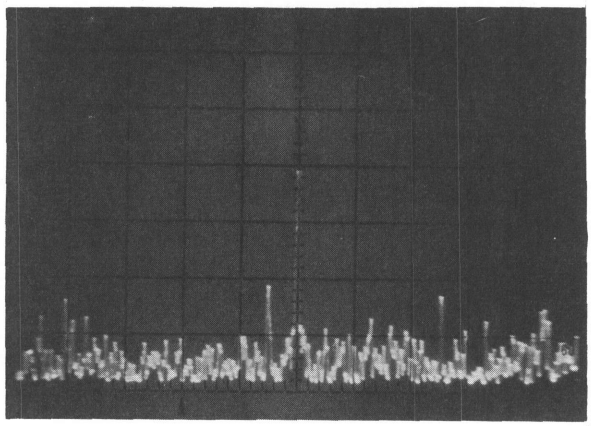

b. Boonton 202H output

Fig. 11 - DVCO rf output and Boonton 202H signal generators (same DVCO rf) at -96 dBm over 300 kHz bandwidth

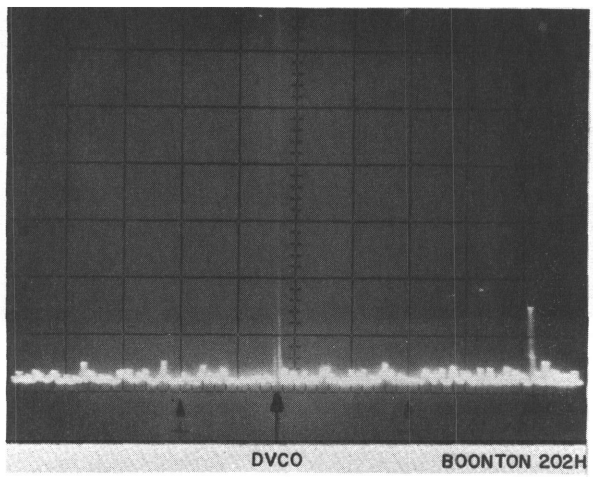

Fig. 12 - DVCO output and Boonton 202H output (-69 dBm) offset over 4.5 MHz bandwidth from DVCO

The incidental FM induced on the VCO by the digital feedback system was measured using the test setup shown in Fig. 13. The results are shown in Figs. 14 through 16.

Figure 14 shows the only case in which a significant amount of incidental FM was detected. The rate at which the DVCO output shifts approximately 500 Hz in frequency is the sample rate, 181.818 Hz, of the feedback loop. This incidental FM is a function of the gain of the feedback loop and proportional to the minimum pulse-width error.

Both Fig. 15 and Fig. 16 show that there are no high-frequency components in the incidental FM from the DVCO.

CONCLUSIONS

The prototype digital control unit met the stated requirements and is presently being implemented, with some engineering changes, as part of the NRL receiving system. The design approach is simple to implement but also very limited in receiver frequency coverage. Using the 20 MHz maximum counting rate T^2L gives approximately 18 MHz frequency coverage of which only 22.2% was required. By changing the crystal oscillator frequency the band coverage can be located in the desired rf sector.

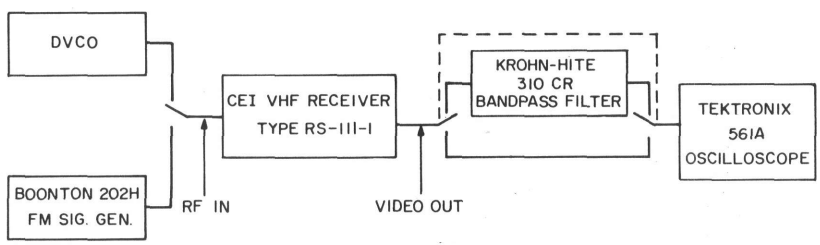

Fig. 13 - Incidental FM measurement test set up

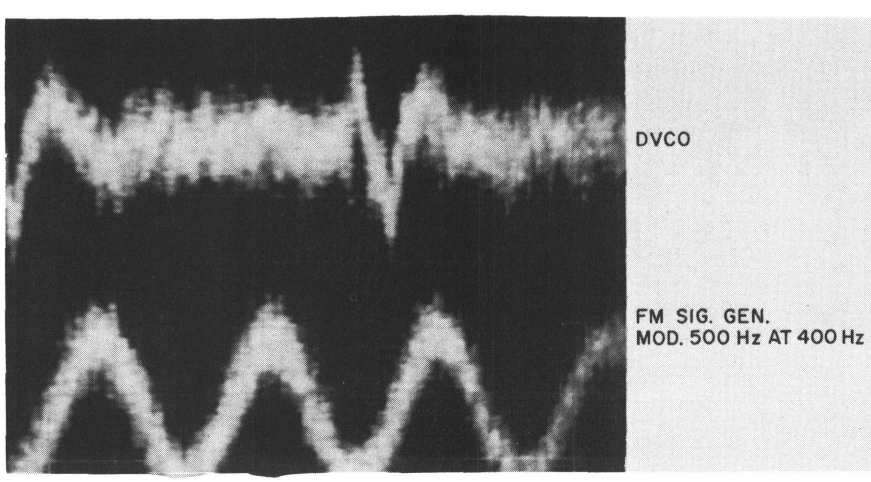

Fig. 14 - Incidental FM measurement at 400-Hz rate - CEI receiver video output. Horizontal trace was 1 msec/cm, vertical trace was 0.02 volts/cm, and Krohn-Hite filter was 20 Hz to 75 kHz.

The prototype design used only the error correcting loop to tune to the desired rf. In implementing the system a linear approximation of the voltage-versus-frequency curve was added to the error feedback voltage to provide initial course adjustment directly from the digital switch settings. This allows rapid tuning as well as working over the narrow linear portion of the rf error versus pulse-width error curve.

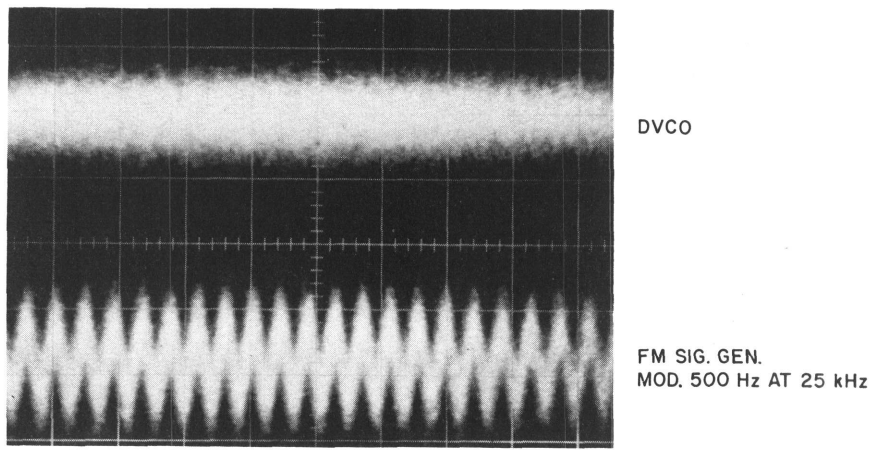

Fig. 15 - Incidental FM measurement at 25 kHz rate – CEI receiver video output. Horizontal trace was 0.1 msec/cm, vertical trace was 0.02 volts/cm, and Krohn-Hite filter was 20 Hz to 75 kHz.

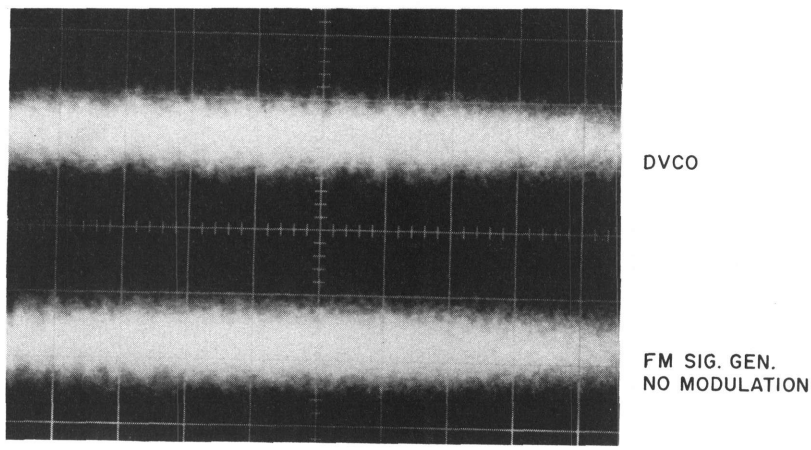

Fig. 16 - CW input without FM for comparison with DVCO – CEI receiver video output. Horizontal trace was 0.1 msec/cm, vertical trace was 0.02 volts/cm, and Krohn-Hite filter was bypassed.

This page intentionally left blank.

Security Classification

DOCUMENT CONTROL DATA - R & D

(Security classification of title, body of abstract and indexing annotation must be entered when the overall report is classified)

1. ORIGINATING ACTIVITY *(Corporate author)* Naval Research Laboratory Washington, D.C. 20390	2a. REPORT SECURITY CLASSIFICATION Unclassified 2b. GROUP

3. REPORT TITLE

DESIGN OF A DIGITAL CONTROL UNIT FOR AN NRL RECEIVING SYSTEM

4. DESCRIPTIVE NOTES *(Type of report and inclusive dates)*

Final report on one phase of the problem; work is continuing on other phases.

5. AUTHOR(S) *(First name, middle initial, last name)*

Joseph M. Abell

6. REPORT DATE August 1, 1969	7a. TOTAL NO. OF PAGES 18	7b. NO. OF REFS
8a. CONTRACT OR GRANT NO. NRL Problem R06-29 b. PROJECT NO. c. d.	9a. ORIGINATOR'S REPORT NUMBER(S) NRL Report 6897 9b. OTHER REPORT NO(S) *(Any other numbers that may be assigned this report)*	

10. DISTRIBUTION STATEMENT

This document has been approved for public release and sale; its distribution is unlimited.

11. SUPPLEMENTARY NOTES	12. SPONSORING MILITARY ACTIVITY Department of the Navy (Chief of Naval Operations), Washington, D.C. 20360

13. ABSTRACT

To provide required receiver tuning accuracy for a system being developed by NRL, a digital control unit for the receiver local oscillator was designed and constructed. The approach used a voltage-controlled oscillator in a closed-loop feedback system. The requirements were to control the receiver local oscillator from 175 MHz to 180 MHz in 1-kHz increments with provisions for both manual or computer control of the receiver.

The digital control unit was breadboarded, using integrated circuits as the building blocks. The basic principle used to establish control of the local oscillator was the comparison of phase between a standard reference signal and a function of the local oscillator frequency. The error voltage established from this comparison was then used to control the local oscillator.

DD FORM 1 NOV 65 1473 (PAGE 1)

S/N 0101-807-6801

Security Classification

Security Classification

14. KEY WORDS	LINK A ROLE	LINK A WT	LINK B ROLE	LINK B WT	LINK C ROLE	LINK C WT
Digital control unit for rf Digital receiver tuning						

DD FORM 1 NOV 65 1473 (BACK)
(PAGE 2)

Security Classification