NRL Report 6855

Controlled Destructive Testing of Pressure Vessels

J. J. Gennari and E. C. Czul

Ocean Engineering Branch
Ocean Technology Division

April 3, 1969

NAVAL RESEARCH LABORATORY
Washington, D.C.

This document has been approved for public release and sale; its distribution is unlimited.

CONTENTS

Abstract	ii
Problem Status	ii
Authorization	ii
INTRODUCTION	1
GENERAL THEORY OF THE TEST METHOD	1
TESTS CONDUCTED	4
CONCLUSIONS	9

ABSTRACT

Controlled destructive testing of shells or pressure vessels by the hydrostatic method discussed in this report provides a good means of analyzing the failure modes of these structures. Normally when a pressure vessel is tested to destruction, analysis of the rupture is made from bits and pieces of a completely collapsed or exploded vessel. The technique described allows a test to be halted at any point — even before permanent deformation has occurred. This technique also has considerable merit for testing pressure vessels made of ceramic or other brittle material, where rupture normally reduces the vessel to a powder or to numerous small fragments.

PROBLEM STATUS

This is a final report on one phase of the problems.

AUTHORIZATION

NRL Problem G01-03
Project RF 101-03-46-5254

NRL Problem G05-02
Project SF 199-03-01-1463

Manuscript submitted November 5, 1968.

CONTROLLED DESTRUCTIVE TESTING OF PRESSURE VESSELS

INTRODUCTION

This report describes a unique method of structurally testing pressure vessels hydrostatically. The method is applicable for testing internal as well as external types of pressure vessels. For normal, nondestructive testing, this technique allows easy detection of the material proportional limit, or the point of incipient buckling. A novel feature of the method pertains to the ability to limit the extent of deformation or rupture of the pressure vessel during a destructive test by controlling the release of energy from the pressurized liquid. The control of fracture of brittle pressure vessels, such as those made of fiber glass or ceramics, may also be realized by this technique, but to a lesser degree.

GENERAL THEORY OF THE TEST METHOD

If an open-mouthed plastic bottle is completely filled with a liquid, any force exerted on the walls of the bottle will cause the liquid to overflow. If the amount of overflow is measured, it will be found that this overflow can be related to the force applied which caused the overflow. This, in essence, is the basis of the test method to be described. Figure 1 diagrammatically shows the setup for testing external-pressure types of vessels; Fig. 2 shows a similar arrangement for testing internal-pressure vessels.

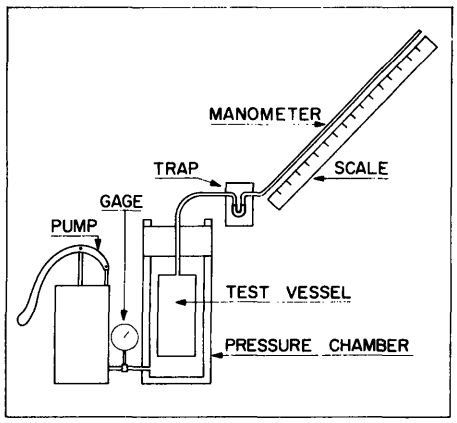

Fig. 1 - Test setup for external pressure tests

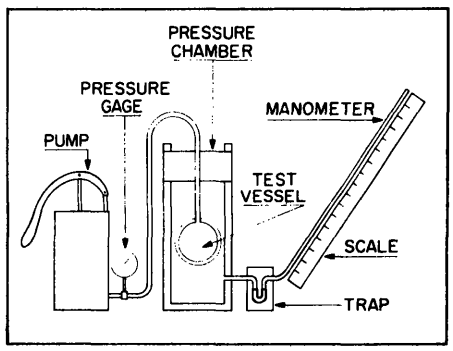

Fig. 2 - Test setup for internal pressure vessels

In order to perform a test, the vessel to be tested is first filled with a gas-free liquid and placed inside a second pressure vessel which is also liquid filled. The liquid inside external-pressure types of vessels is maintained at atmospheric pressure throughout the test. For internal-pressure test vessels, the liquid of the second or enveloping pressure vessel is kept at atmospheric pressure. A similar test method is described by

New.* Connection of the liquid to the atmosphere is effected by means of a small-diameter steel tube led through the walls of the pressure vessels.

The steel tube is connected to a small-bore, graduated manometer, open at the top. The manometer measures the volume of liquid forced out by deformation of the test vessel. This volume can be plotted as a function of pressure as the test proceeds, giving a dynamic, instantaneous, and accurate picture of the test item's stress-strain relationship. In particular, yield points and proportional limits are readily recognizable. Since the strain on the test vessel is recorded as a change in volume of displaced fluid, the manometer must be of sufficient volume to accommodate all the fluid which is expected to be forced out of the pressure vessel during the test. A manometer of large bore diameter would of course hold a large volume of liquid but at a sacrifice in the resolving ability of the volume to be measured. Increased resolution of values of volume or strain may be obtained by decreasing the bore diameter of the manometer. It is possible to maintain the same degree of strain resolution in measurements of large volumes as for small volumes of displaced liquid. This resolution achievement may be accomplished by a manometer in the form shown in Fig. 3. As can be seen, this manometer is merely a series of burettes of different volumes. With this burette form of manometer, any volume of displaced liquid can be measured. At any time during the test when greater resolution of the value of strain is desired, the flow is channeled by stopcocks to the smaller bore manometer. When full, each burette can be dumped independently into the succeeding burette or into a beaker.

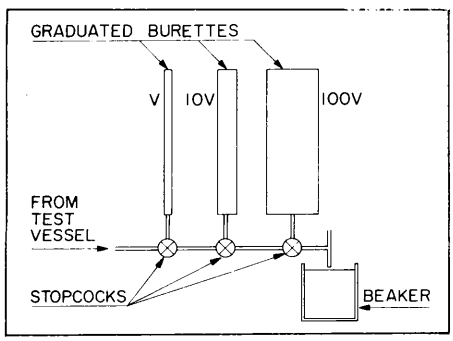

Fig. 3 - Manometer system for measurement of large volumes

When a test vessel ruptures, the unpressurized fluid in the vessel is subjected to a high surge of pressure. In order to prevent expulsion of liquid from or damage to the manometer during these surges, a trap is placed between the tube and the manometer. This trap is simply a short piece of rubber tubing bent to a small-radius "U" turn and slipped onto the ends of the tube and manometer. When the test vessel ruptures, the energy imparted to the fluid in the vessel blows off the rubber tubing and thereby empties the escaping liquid into the container enclosing the trap. Another method of dampening the surge is by the judicious selection of the bore diameter of the steel tube attached to the test vessel. The proper diameter will attenuate the surge effect experienced by the fluid in the manometer to any desired degree. In our tests we found that a 0.020-in. (I.D.) tube sufficed for our needs.

The surge pressure level and duration developed in the unpressurized liquid depends upon the volume and compressibility of both the pressurized and unpressurized liquids as well as the diameter of the attached tube. At the instant of rupture, the two liquid systems tend to approach an equilibrium state at some point less than the rupture pressure. If there were no flow of liquid through the steel tube attached to the test vessel, the pressures would quickly equalize. It is this tendency toward pressure equalization of the two liquid systems that prevents complete rupture or collapse of the test vessel. The sooner an equalization pressure can be reached, the less is the damage to the

*"A Nondestructive Method for Detecting the Incipient Buckling Pressure of Thin-Walled Shells," J. C. New, Naval Ordnance Laboratory Report 1154, May 28, 1951.

specimen vessel; or, the less energy transfer required between the two liquid systems at rupture, the greater the degree of control of deformation of the test vessel. The steel tube attached to the test vessel is one of the means used to control the degree of fracture. The other is operator reaction time. When the test-facility operator notes an increased rate of fluid outflow from the test vessel, he manually reduces the hydrostatic test pressure to atmospheric by operating the vent valve of the pressure chamber.

The extent of collapse of a shell structure may be controlled in several ways. All of the control techniques have one common objective: to externally dissipate or expend the energy stored in the pressurized liquid prior to the total collapse of the pressure vessel. One method of control is realized by selecting a liquid having the proper compressibility coefficient. Knowing the amount of liquid involved and its compressibility, the change in volume at the test pressure used can be quite accurately calculated. A second consideration, closely related to compressibility, is control of the volume of pressurized liquid to be used. The realization of either of these control considerations is of course dependent upon the physical size of the test specimen as well as the internal volume of the enveloping pressure vessel. Normally, the test specimen is designed unmindful of the compressibility and volume of the liquids used for any specific test technique. The main pressure vessel is generally a permanent part of a pressure testing facility, and, therefore, little can be done to vary this factor. However, excess volumes of large pressure vessels can be filled with solids, and liquids are available which differ widely in their compressibility. Mercury, the least compressible of all liquids, compresses at least 15 times less than gasoline. Glycerine is the least compressible of the nonmetallic liquids. The amount of internal energy stored in the pressurized liquid is directly proportional to its compressibility; consequently, there is about 15 times less work involved in pressurizing mercury to 10,000 psi than there is in pressurizing gasoline. Table 1 shows the relative compressibilities of a few selected liquids.

Table 1
Relative Compressibility of Liquids*

Liquid	Gage Pressure (atm)	Relative Volume		
		0°C	20°C	50°C
Mercury	0	1.00000	1.00398	—
	968	0.99626	1.00007	
Glycerin	0	1.0000		1.0266
	500	0.9900	—	1.0136
	1000	0.9806		1.0025
Water	0	1.0000	1.0016	1.0118
	500	0.9770	0.9819	0.9916
	1000	0.9576	0.9632	0.9743
Carbon Tetrachloride	0			1.0000
	500	—	—	0.9519
	1000			0.9192
Gasoline	0	1.0000		1.0595
	500	0.9572	—	1.0005
	1000	0.9311		0.9654

*From International Critical Tables.

When a pressure vessel collapses, two wave fronts emanate from the collapse point. The first is a shock wave, which proceeds at a very rapid rate through the fluid; the second is the pressure wave, which travels much more slowly. The shock wave is of high amplitude and short duration, while the pressure wave is of relatively low amplitude and long duration. The total energy in each case is a function of amplitude and duration. Considerably more energy is involved in the pressure wave. However, some structures that can resist the pressure wave are destroyed by the shock wave. This is generally true of materials of low flexural modulus. Glass spheres, for instance, are very susceptible to sympathetic implosion due to an impinging shock-wave front. Metals exhibit the opposite reaction. In this test technique, we are principally interested in the pressure wave.

When the vessel ruptures, the internal energy of the pressurized fluid is adiabatically converted to kinetic energy. For a particular vessel in a pressurized state, the power released at rupture depends upon the rate and duration of the energy release, which is reflected in the failure mode of the pressure vessel. When one considers that pressure vessels are rather massively built and that the burst pressure is acting on an area of the vessel wall, while the energy to be released from the liquid is a function of its volume, it can be understood that the density and mass of the pressure vessel material control the velocity of any fragment torn away. As soon as a tear develops in a vessel wall and the pressurized liquid begins to escape, internal energy-loss rate of the liquid is very rapid. This is one reason why low-compressibility liquids are desirable for use in high-pressure work. Exploding high-pressure air flasks are more dangerous than liquid flasks for the same pressurized states because the energy release rate of a gas is slower.

TESTS CONDUCTED

To verify the feasibility of the described system for conducting nondestructive and controlled destructive tests of pressure vessels, an aluminum spherical shell was first tested. Two accurately machined 3-in.-diameter hemispheres with a 0.095-in.-thick wall were bonded together to form an external-pressure test vessel. The unpressurized fluid in the test shell was water, and the pressurizing medium was paraffin oil. Figure 4 shows the portable rack-mounted pressure facility used. Pressure to the test shell was applied in 200-psi increments at 5-min intervals. At 4700 psi (see Fig. 5), the plotted stress-strain curve was no longer linear, indicating that the proportional limit had been reached. At 5100 psi the test was discontinued, the pressure was reduced to atmospheric, and the shell removed. The sphere showed no visual evidence of damage. However, measurement of the shell indicated an out-of-roundness of 0.010 in. The shell was again placed in the test chamber and again put under pressure. This time the pressure was brought up to 4000 psi in 500-psi increments. From 4000 to 4800 psi, the pressure changes were in increments of 200 psi, and at 4800 were reduced to 100 psi. At 5100 psi the stress-strain curve showed a nonlinear deviation. At 5300 psi, the shell failed. The pressure was immediately released by venting the oil to the reservoir tank. As can be seen in Fig. 6, the sphere is only partially collapsed. Figure 7 also shows the steel tube assembly attached to the spherical shell.

A second series of tests was performed on fiber glass cylinders which had metal end plugs. These cylinders were 6 in. long with an I.D. of 1.325 in. and had various wall thicknesses and composition of the glass fiber. Figure 8 shows one of these cylinders with the steel tube attached to the end plug.

One of these cylinders was subjected to a standard, hydrostatic destructive test. Figure 9 shows the results. When this same type of cylinder was tested by use of the controlled destructive test method, the results were as shown in Fig. 10.

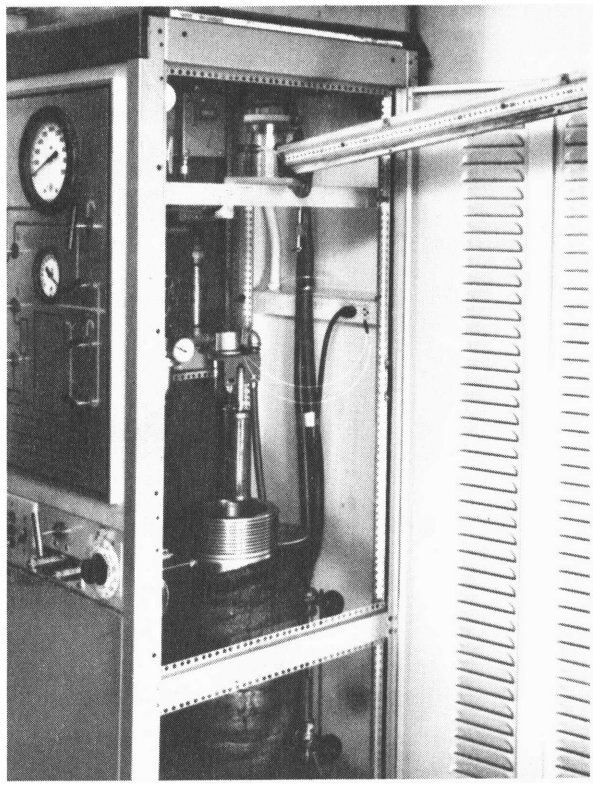

Fig. 4 - Tank and apparatus for fiber glass cylinder test

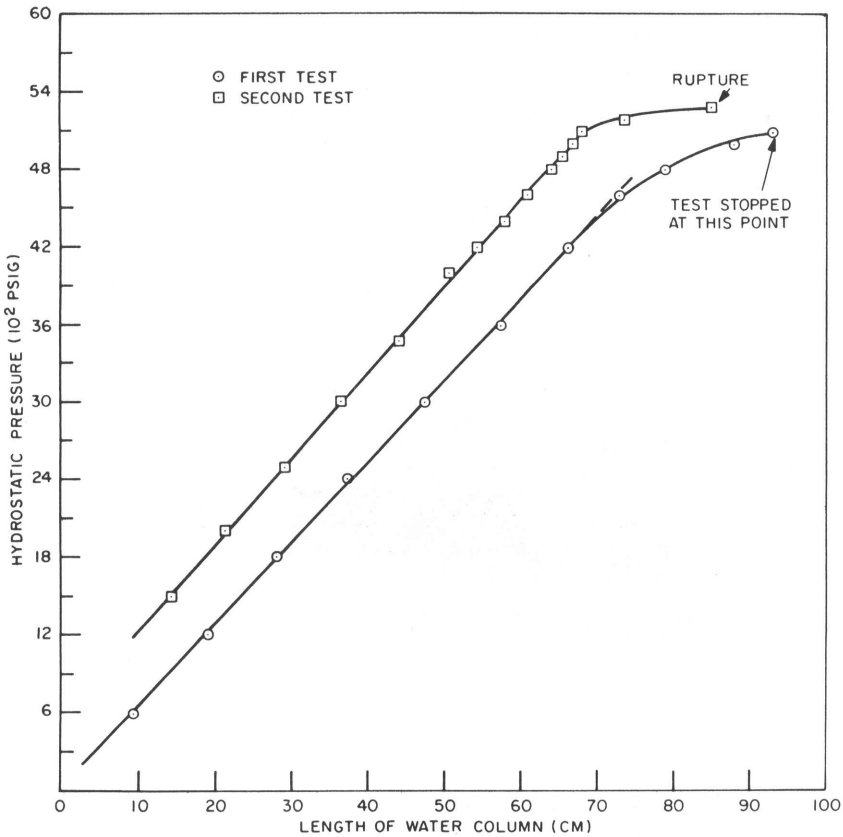

Fig. 5 - Stress-strain curve of 3-in. O.D. aluminum spherical shell (wall thickness 0.095 in., +0.003, -0.001; manometer bore diam 1.8 mm)

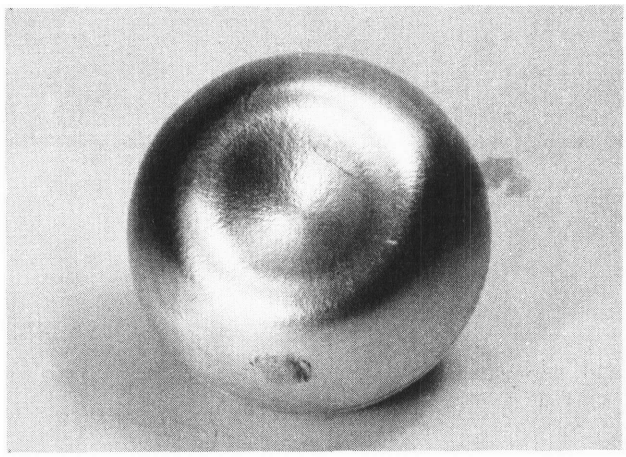

Fig. 6 - Partially collapsed aluminum sphere

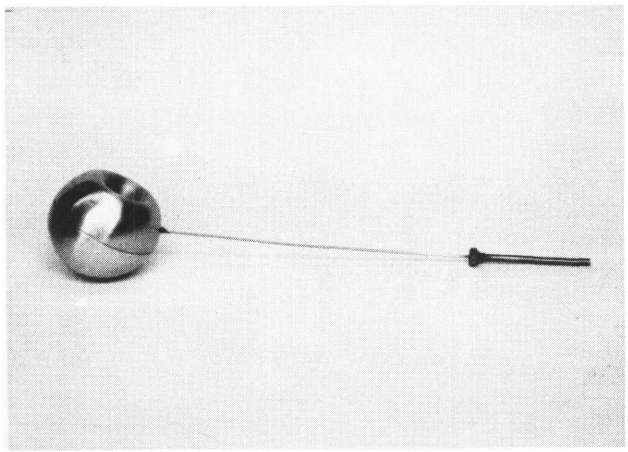

Fig. 7 - Aluminum sphere with steel tube attached

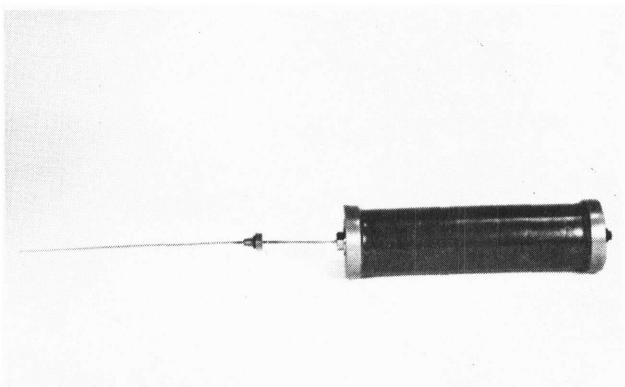

Fig. 8 - Fiber glass cylinder
with steel tube attached

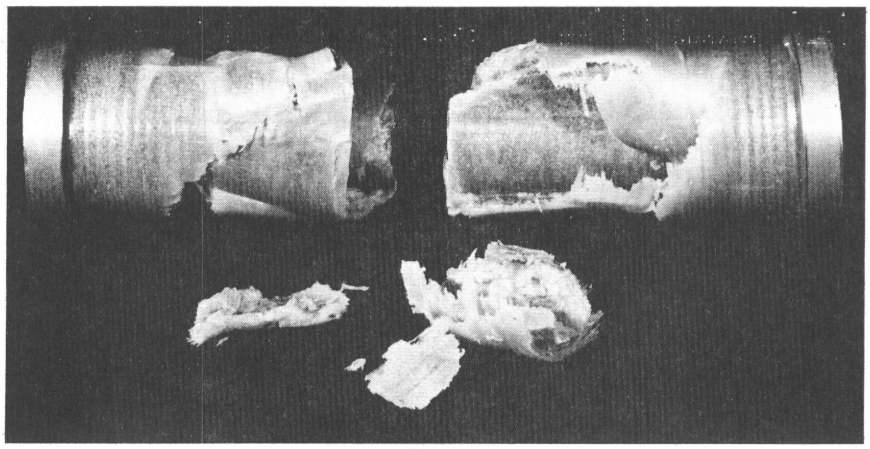

Fig. 9 - Pressure-test results of fiber glass cylinder filled with air; pieces have been pulled apart from single mass

Fig. 10 - Controlled destruction of fiber glass pressure vessels

Figure 11 shows one of these cylinders which has been cut and a ring section taken from it. Photomicrographs of the rupture cross-sectional area of the ring section are given as Figs. 12 and 13. It is known that the inner walls of a pressure vessel experience a greater stress than the outer walls of an externally pressurized vessel. These photomicrographs show the validity of the theory.

Most of the tests conducted in 1962 were performed in a small pressure vessel (5-1/2 in. diam x 20 in. long, internally) at pressures up to 14,800 psi. Since that time, the testing of large chambers has been performed with equal success in NRL's large pressure tank (4 ft x 8 ft long, internally). In the large tank tests, the fluid systems were fresh water. A typical test was to determine the depth rating for a deep-sea electronics housing (Fig. 14). Here, the test was carried well beyond the proportional limit, so that the cylindrical body and the flat end caps were permanently deformed; but this relatively simple technique did pinpoint the limit for no permanent deformation, i.e., 3000 psi.

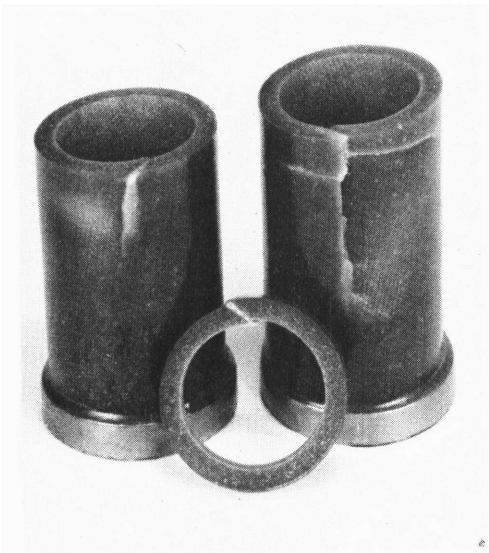

Fig. 11 - Segmented fiber glass pressure vessel

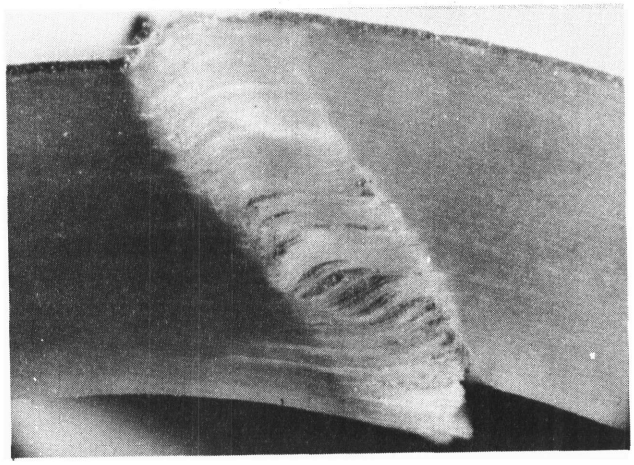

Fig. 12 - Photomicrograph of rupture area

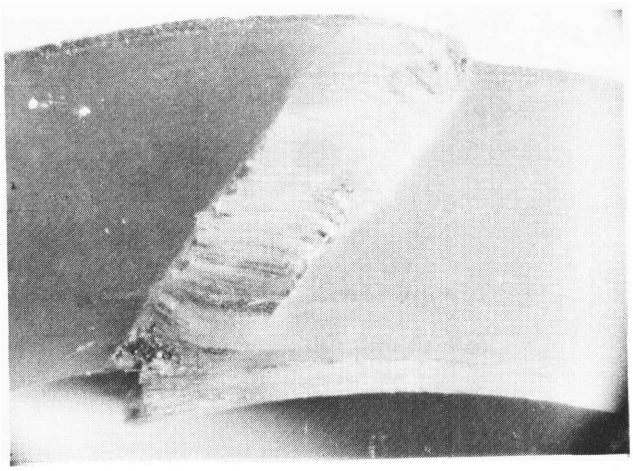

Fig. 13 - Photomicrograph of rupture area

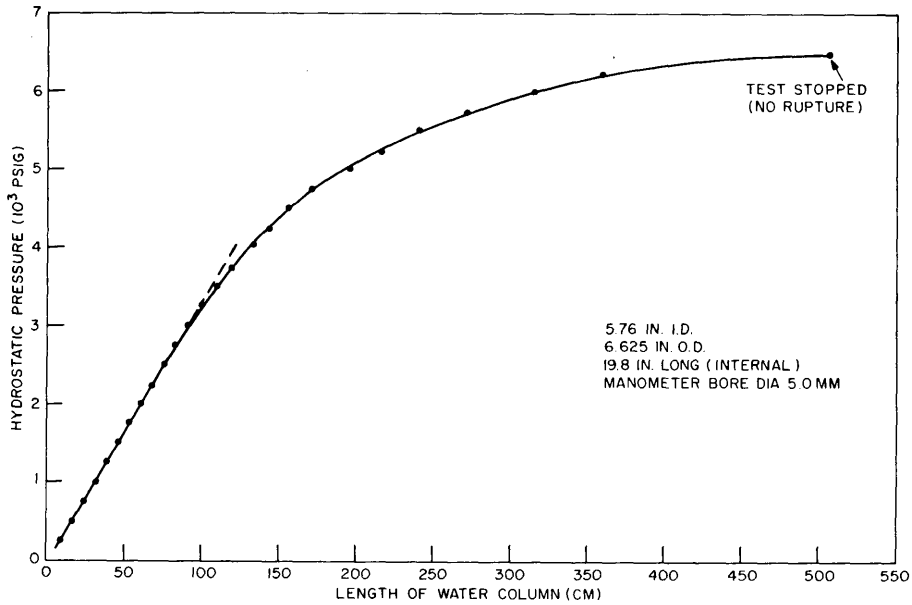

Fig. 14 - Stress-strain curve of a type 304 steel pressure case
(Note: 100 cm of water column ≈ 1.2 in.^{3})

All tests were conducted at room temperature. The pressurizing fluid temperature was not monitored. The few degrees of temperature change which might have occurred during a test are not considered to have significantly affected the test results.

CONCLUSIONS

It is believed that this test method will provide the materials engineer with a valuable analytical tool. Considerable savings in time and money can accrue in pressure testing the final product rather than a full-scale model, especially when only one or two large, expensive units are required.

This page intentionally left blank.

Security Classification

DOCUMENT CONTROL DATA - R & D

(Security classification of title, body of abstract and indexing annotation must be entered when the overall report is classified)

1. ORIGINATING ACTIVITY *(Corporate author)* Naval Research Laboratory Washington, D.C. 20390	2a. REPORT SECURITY CLASSIFICATION Unclassified 2b. GROUP

3. REPORT TITLE

CONTROLLED DESTRUCTIVE TESTING OF PRESSURE VESSELS

4. DESCRIPTIVE NOTES *(Type of report and inclusive dates)*

A final report on one phase of the problems.

5. AUTHOR(S) *(First name, middle initial, last name)*

Jervis J. Gennari and Ernest C. Czul

6. REPORT DATE April 3, 1969	7a. TOTAL NO. OF PAGES 14	7b. NO. OF REFS
8a. CONTRACT OR GRANT NO. NRL Problems G01-03, G05-02 b. PROJECT NO. RF 101-03-46-5254, SF 199-03-01-1463 c. d.	9a. ORIGINATOR'S REPORT NUMBER(S) NRL Report 6855 9b. OTHER REPORT NO(S) *(Any other numbers that may be assigned this report)*	

10. DISTRIBUTION STATEMENT

This document has been approved for public release and sale; its distribution is unlimited.

11. SUPPLEMENTARY NOTES	12. SPONSORING MILITARY ACTIVITY Department of the Navy (Office of Naval Research and Naval Ship Systems Command), Washington, D.C. 20360

13. ABSTRACT

Controlled destructive testing of shells or pressure vessels by the hydrostatic method discussed in this report provides a good means of analyzing the failure modes of these structures. Normally when a pressure vessel is tested to destruction, analysis of the rupture is made from bits and pieces of a completely collapsed or exploded vessel. The technique described allows a test to be halted at any point — even before permanent deformation has occurred. This technique also has considerable merit for testing pressure vessels made of ceramic or other brittle material, where rupture normally reduces the vessel to a powder or to numerous small fragments.

DD FORM 1 NOV 65 1473 (PAGE 1)

S/N 0101-807-6801

Security Classification

Security Classification

14. KEY WORDS	LINK A		LINK B		LINK C	
	ROLE	WT	ROLE	WT	ROLE	WT
Metallurgy Pressure vessels, testing Strength of materials, test methods						

DD FORM 1 NOV 65 1473 (BACK)
(PAGE 2)

Security Classification