NRL Report 6921

The NRL Microwave Space Research Facility

Design and Development of the 60-ft X-Band Antenna

C. A. Bass and D. H. Townsend

Satellite Communication Branch
Communications Sciences Division

August 11, 1969

NAVAL RESEARCH LABORATORY
Washington, D.C.

This document has been approved for public release and sale; its distribution is unlimited.

CONTENTS

Abstract	ii
Problem Status	ii
Authorization	ii
INTRODUCTION	1
QUALITIES REQUIRED IN A RESEARCH FACILITY	4
PHYSICAL STRUCTURE	5
Foundation	5
Tower	5
Cable Wrap	5
Hydraulic Drive System	6
Lubrication System and Hydrostatic Bearing	8
Yoke and Elevation Housing	9
Reflector and Subreflector	10
SERVO CONTROL	11
Servo System	11
Modes of Control	12
Encoding System	15
REAL-TIME DIGITAL CONTROL SYSTEM	16
RECEIVING AND TRANSMITTING SYSTEMS	21
CONCLUSION	22
ACKNOWLEDGMENTS	22

ABSTRACT

To extend the Navy's program in satellite communications, a fully steerable 60 ft X-band antenna system having a Cassegrainian configuration was recently completed at the Naval Research Laboratory's (NRL's) Microwave Space Research Facility at Waldorf, Maryland. It is designed for smooth, precise tracking at velocities from 1/10 sidereal rate to 6 deg/sec through the use of a hydrostatic bearing in the azimuth axis and an antibacklash hydraulic drive system. The 60-ft paraboloidal surface is constructed from solid-surface 2-in. aluminum honeycomb panels with a nominal surface tolerance of 0.019 in. at zenith. The antenna can be operated in five different modes: slew, manual, synchro slaved, digital, and autotrack. In the digital mode, a general-purpose digital computer has been programmed to operate in a real-time, time-shared system for direct digital control of the antenna position, providing capabilities such as program tracking of satellites and automatic scan and acquisition sequences. The instrumentation flexibility of this system is enhanced by interchangeable feeds, a variety of S- and X-band preamplifiers, and a 25-kW X-band transmitter. The acceptance tests plus operational data indicate that the design and development objectives of instrumentation quality and flexibility have been achieved.

PROBLEM STATUS

This is a final report on one phase of the NRL Microwave Space Research Facility. Work on other phases is continuing.

AUTHORIZATION

NRL Problem R01-36
Projects SF 019 024, Task 7449 and
XF 48222001-116/2116.5

Manuscript submitted April 4, 1969.

THE NRL MICROWAVE SPACE RESEARCH FACILITY

DESIGN AND DEVELOPMENT OF THE 60-FT X-BAND ANTENNA

INTRODUCTION

With the increasingly sophisticated technology required for satellite communication research, a definite need for a new facility was recognized by the Navy. In March 1961 the Bureau of Ships assigned Project Number SF 019 024 Task 7449 in order to obtain information necessary for the design of operational satellite communication systems. This was to be accomplished by developing research facilities for performing radio communications studies using natural and artificial satellites. The Bureau of Ships further requested that the Naval Research Laboratory (NRL) be responsible for the procurement of two antenna systems, the first for delivery to NRL's Radio Division Site at Waldorf, Maryland, and the second for delivery to the La Posta, California, site under cognizance of the Naval Electronics Laboratory Center (NELC), which was assigned a similar project. The second antenna system, with the exception of the digital control system and a shorter tower base, is the same as the NRL facility at Waldorf. In addition, the Navy procured a third system for the National Aeronautics and Space Administration (NASA) for installation at the NASA Wallops Station facility in Virginia.

NRL's Microwave Space Research Facility (MSRF) is located approximately 6 mi west of Waldorf, Maryland, at an elevation of 200 ft above sea level (Fig. 1). The 7-acre site contains the antenna control building, the transmitter power supply building, the administration building, and other less important buildings. Briefly, the antenna consists of a fully steerable 60-ft Cassegrainian reflector constructed from solid 2-in. aluminum honeycomb panels mounted, elevation over azimuth, atop a 65-ft truncated cone (Fig. 2). The secondary reflector is a 6-ft-diameter hyperboloid supported from the primary reflector by a quadripod composed of four equally spaced struts. A semipermanent S-band feed and four interchangeable X-band feeds, in conjunction with an X-band maser, a parametric amplifier, and two tunnel diode amplifiers, contribute to the system's instrumentation flexibility. When provided with a similar support assembly, feeds for C-band frequencies and above may be easily interchanged with the X-band feeds. The antenna is capable of operation with ±450° of travel in azimuth and -2° to +92° in elevation. Although the weight above the azimuth turntable is in excess of 300,000 lb, smooth precise tracking at velocities from 1/10 sidereal rate to 6 deg/sec is made possible through (a) use of a hydraulic drive system, (b) stiffness designed into the antenna, and (c) control of friction. A hydrostatic bearing on the azimuth axis significantly contributes to this performance through (a) increased stiffness and (b) reduction of friction and localized deformations generally associated with more conventional bearings. The 12-ft-diameter hydrostatic thrust bearing basically "floats" the azimuth turntable on a film of oil supplied through flow-compensating capillaries that enable the bearing to resist large overturning moments. The drive system for the antenna consists of two fixed-displacement hydraulic motors in each axis that maintain an opposing torque so there is effectively no backlash. Several

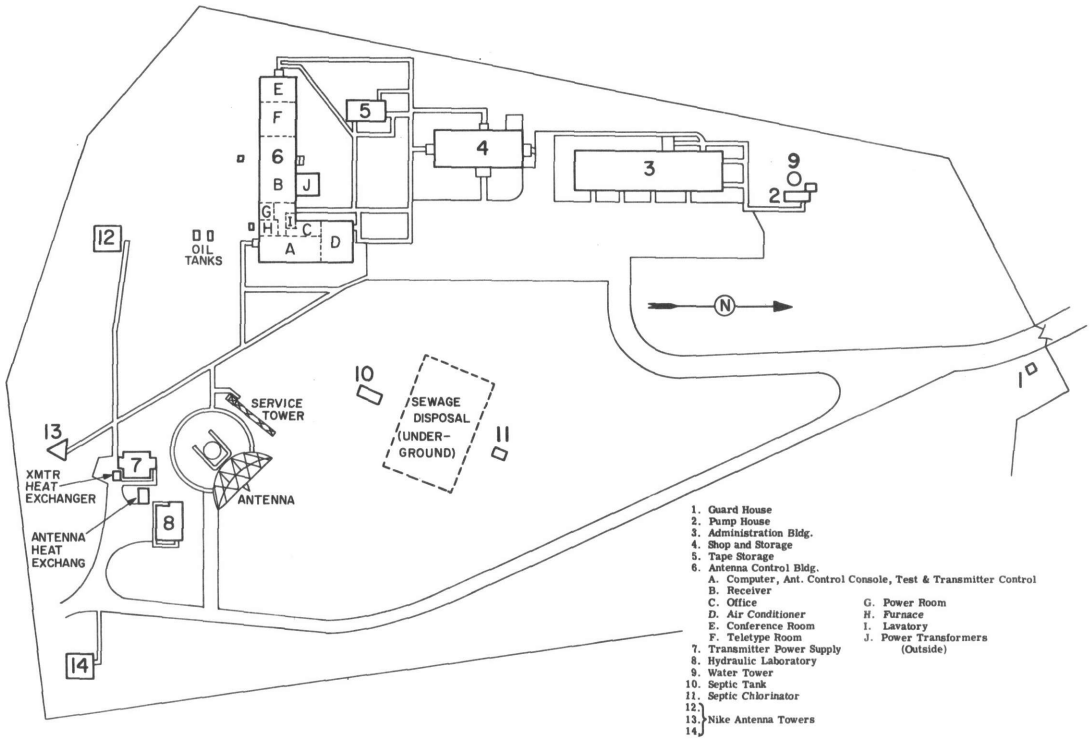

Fig. 1(a) - Site map of the NRL Microwave Space Research Facility at Waldorf, Maryland

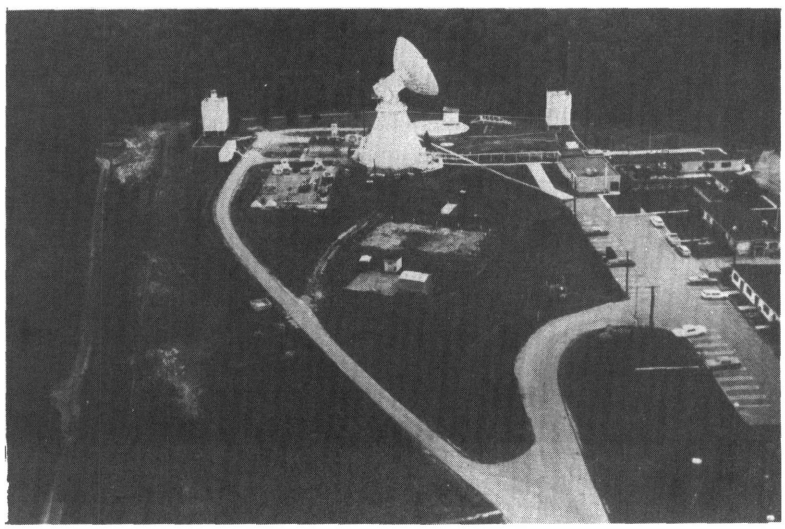

Fig. 1(b) - Aerial view of the NRL Microwave Space Research Facility

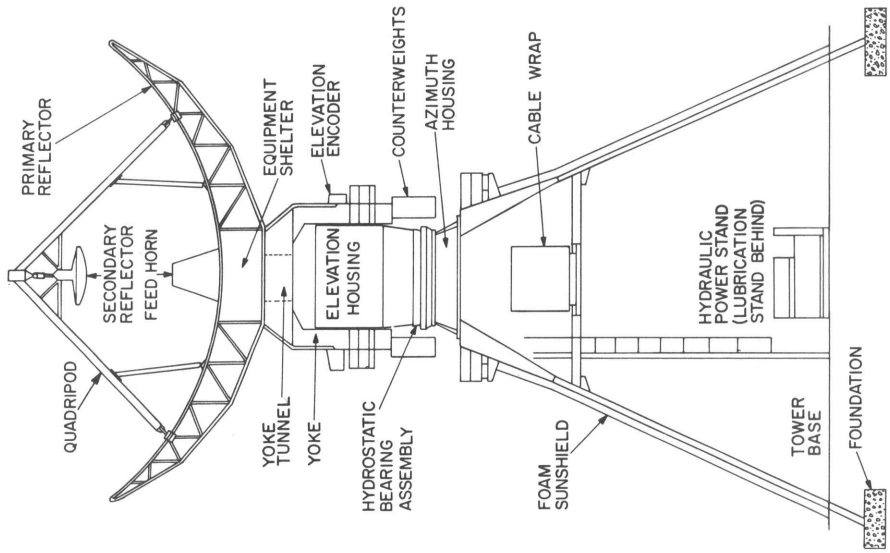

Fig. 2(b) - Cross section of the antenna

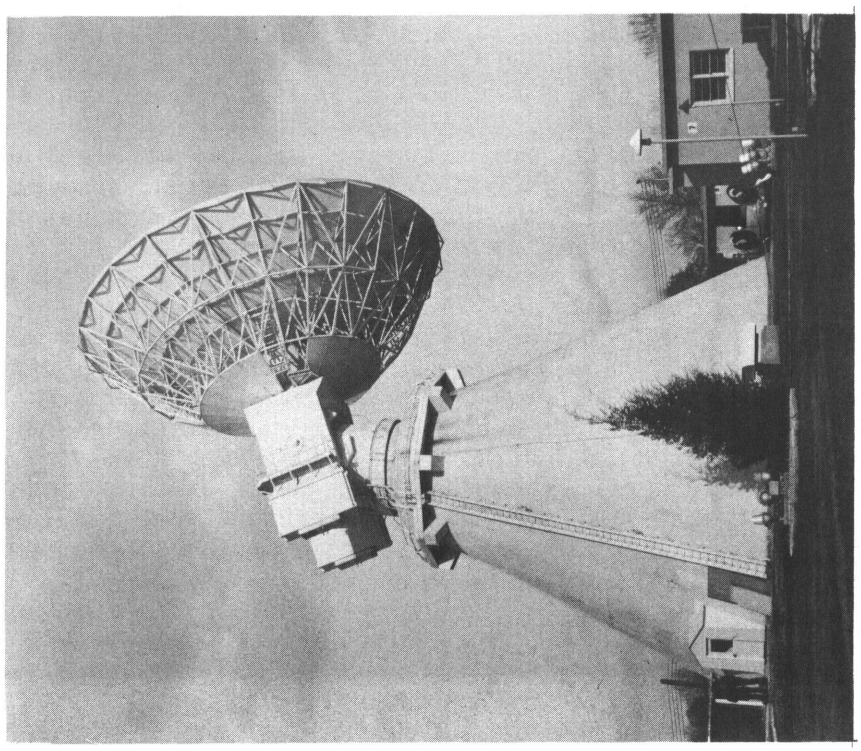

Fig. 2(a) - The Waldorf 60-ft X-band antenna

stages of spur gearing, to which a low-amplitude 16-Hz dither is applied in order to reduce stiction, transmit drive power to both the azimuth and elevation axes.

The antenna may be operated in five different modes: slew, manual, synchro slaved, digital, and autotrack. Of these modes, the autotrack and digital modes are the two primary means of control. In the automatic tracking mode, the antenna uses a single-channel monopulse tracking feed system to track beacon or communication channels of active satellites or to track reflected rf energy from passive satellites. In the digital mode, a Control Data Corporation (CDC) 924A general-purpose computer has been programmed to operate in a real-time, time-shared digital system for direct control of antenna position, providing such capabilities as program tracking of satellite or celestial objects. To date, the digital mode has been the most frequently used due to the types of experiments being performed.

QUALITIES REQUIRED IN A RESEARCH FACILITY

Two fundamental qualities are needed for a satellite communications research facility–instrumentation quality and flexibility. Instrumentation quality in an antenna is achieved through its ability to be accurately and precisely pointed to a command position and to contribute as little disturbance as possible to received or transmitted radio energy. This may be accomplished only if stiffness has been designed into the system to permit accurate and precise positioning while maintaining a high degree of resistance to corrupting influences such as wind, gravity, and thermal distortions. Flexibility, on the other hand, is required in a research facility in order to meet the demands that may be imposed on the system by different experiments. For example, a wide range of capabilities is required in the antenna system in order to conduct experiments with synchronous satellites, satellites in highly elliptic orbits, passive satellites, and active satellites, not to mention celestial objects such as radio stars, the sun, the moon, and the planets. Each of these situations requires a system capable of adapting to its particular requirements.

If instrumentation quality is to be achieved in a system such as the one at Waldorf, stiffness is necessary for three primary reasons. (a) The degree of stiffness designed into an antenna determines to a large part the limitations of the servo system performance, i.e., the stiffer a system, the greater its potential performance. (b) The mechanical resistance to such degrading influences as gravity, wind, and thermal distortions will help determine how well the antenna maintains its rf integrity. (c) The rigidity of the structure determines how accurately the reflector may be pointed in addition to how well the servo system can control the position of the antenna. However, a slight misalignment of the azimuth axis to the vertical is permitted on the assumption that the long-term deviations are stable enough to be predictable. In addition, small pointing errors that constitute a single-valued function of the axis in which they occur are also tolerated, but only to the extent that they are long term and measurable. Such systematic errors can be compensated by computer-controlled corrections. The principal contribution of this type of pointing error is a result of gravity deformations and manifests itself primarily in the elevation axis.

If flexibility of system performance is to be achieved, control over a variety of tracking, receiving, and transmitting situations is required. To respond to various tracking situations, the operator requires freedom of control over the antenna. In a digitally controlled antenna system, such as the one at Waldorf, the operator may select any of a large number of software-programmed scan, acquisition, and tracking sequences. In addition, the antenna must provide smooth, precise tracking at velocities ranging from below sidereal rate to several degrees per second. Receiver and transmitter requirements vary according to the type of work being done. To be flexible, the receiver configuration must be easily altered to accommodate signal sources ranging from quiet radio stars to powerful communications terminals and to function as a communications receiver

employing any of a wide variety of modulation schemes or as a radiometric receiver. Similarily, the transmitter must be capable of operating with a wide variety of modulation schemes over output powers ranging from several Watts to several kiloWatts. The ability of an antenna system to adapt to differing situations in these ways, to a large part, determines its flexibility.

PHYSICAL STRUCTURE

Foundation

In the spring of 1963, the U.S. Army Corps of Engineers conducted a series of tests to determine the elastic characteristics of materials underlying NRL's proposed Waldorf X-band antenna facility. Both vibration and seismic refraction tests were performed to measure the depths of subsurface layers, the compression wave velocities through each layer, the shear and compression moduli of these layers, and finally, the resonant frequency of the surface layer. In addition to the on-site tests by the Corps of Engineers, laboratory dynamic tests were performed on core samples taken from the proposed antenna site. The results of these tests indicated that the soil at the Waldorf site was strongly layered clay, with static and dynamic characteristics suitable for constructing a tower and foundation in accordance with the required system performance.

Tower

The supporting tower for the antenna that was subsequently built consists of a 12-in.-thick truncated concrete cone with horizontal and vertical steel reinforcing rods in both the interior and exterior faces. The tower is approximately 65 ft tall, 10.5 ft of which extends below the surface to a circular ring of heavily reinforced concrete serving as the foundation. Studies of the static settling of the structure demonstrated that the spreading effect of the thin gravel stratum was small, probably reducing the settling by 5 percent. It was therefore assumed that its dynamic contribution would also be small, although probably more than 5 percent. In addition, the embedded footing motion causes the overlaying stratum to work both in resisting the motion and in dissipating energy. The resulting stiffness of the tower and foundation have contributed significantly to reducing errors contributed by the motion of the tower.

Access to the inside of the tower is provided by doors at ground level. The hydraulic power stand, lubrication stand, cable wrap, oil purification system, and dry gas waveguide pressurization equipment are some of the systems located inside the tower base. Four optical targets are located on the outside of the tower at points separated by 90° and so oriented as to allow theodolite measurements to the tower from precisely surveyed bench marks. In addition to this, precision tilt sensors have been installed in the elevation housing. The measurements of the long-term tilt and settling effects of the tower will be used in the digital portion of the antenna control system to correct the system for deviations of the azimuth axis from the vertical. Solar radiation and thermal effects on the tower are minimized by a 6-in. layer of expandable-bead polystyrene foam on the outside of the cone. This insulation is further finished with a surfacing material and a semigloss white enamel.

Cable Wrap

A steel ladder inside the tower provides access to a platform containing the cable wrap and waveguide rotary joints at the top of the tower. The inside walls of the tower are also used to support the cables, waveguide, and pipelines running up to the cable wrap (Fig. 3a and b). The cable wrap is specially designed in that it bends rather than

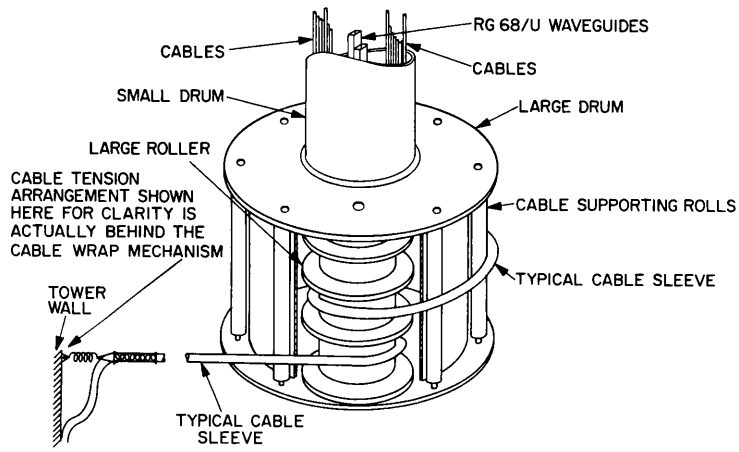

Fig. 3(a) - Cable wrap mechanism

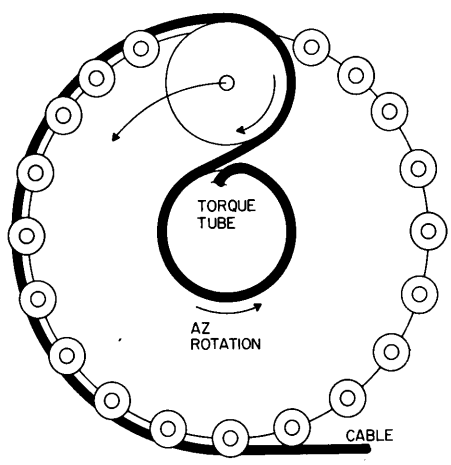

Fig. 3(b) - Cable wrap schematic

twists the cables through ±450° of azimuth travel. This is accomplished by two counter-rotating spools, one of which takes up slack which has been provided in the cables and hoses and feeds it to the second spool, which is rotating in unison with the azimuth turntable. In azimuth, the waveguide and hydraulic power lines pass through rotary joints located just below the cable wrap. In elevation, only a waveguide rotary joint is used; all other cables passing through this axis are twisted through the elevation travel.

Hydraulic Drive System

The drive system (Fig. 4) uses two fixed-displacement, axial, piston hydraulic motors keyed directly into the gearboxes in each axis. The two motors in each axis receive oil from a hydraulic manifold located midway between them. This permits shorter hydraulic lines, which in turn minimizes oil compliance problems. As a safety precaution, overload relief valving is provided on both manifolds. To control the motors, the primary flow of oil is directed through two servo valves mounted on the manifold to one of the two hydraulic motors, depending upon the desired direction of rotation. These two valves act together as a single larger valve. The large servo valve is an underlapped, two-stage valve used to provide precision control at velocities up to about 4 deg/sec. The small servo valve, however, is an overlapped, two-stage valve and is used to provide control at rates over 4 deg/sec. When the antenna is stationary, the pressure is balanced between the opposing motors. To move the antenna, a pressure differential is applied between the motors

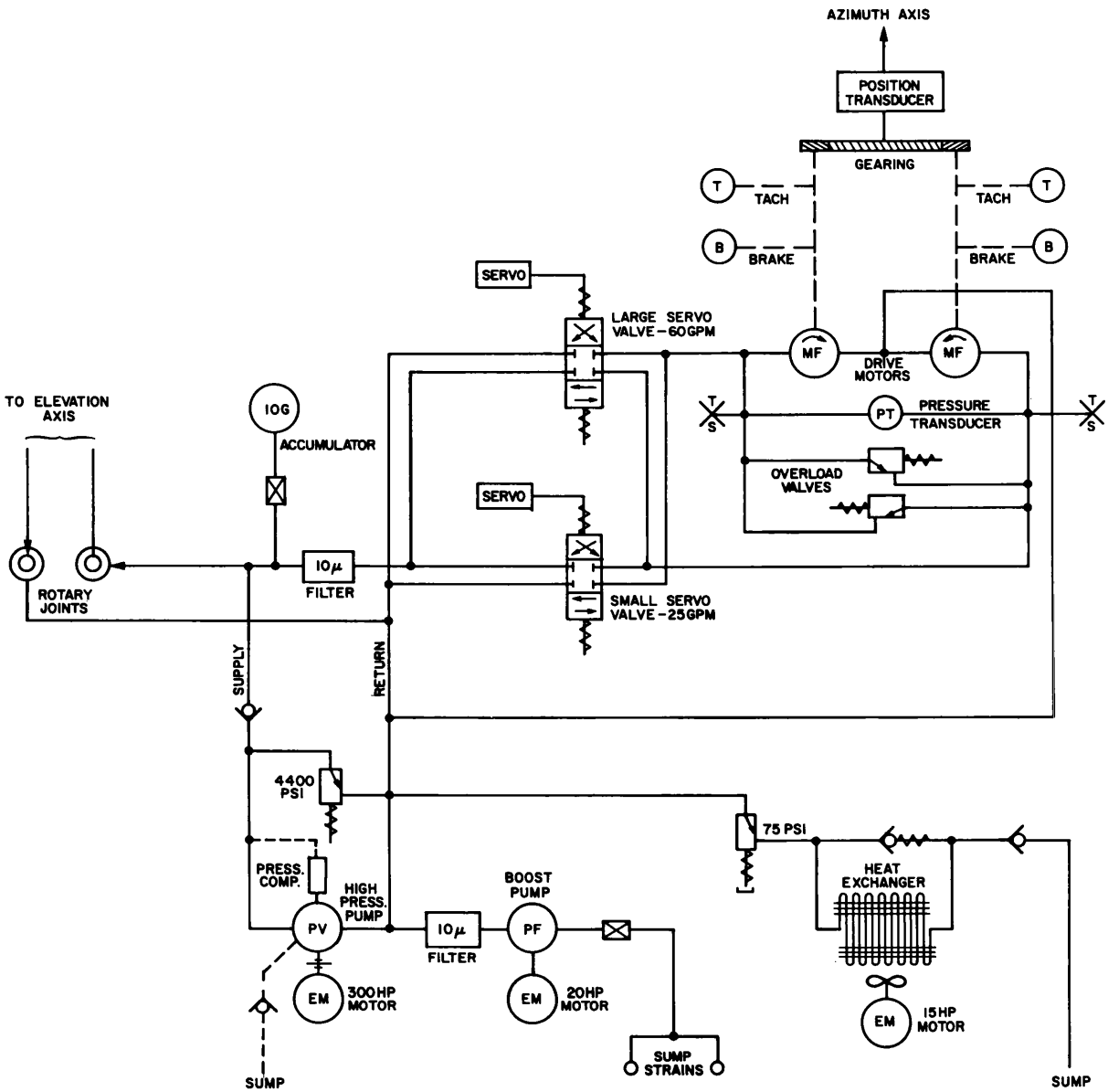

Fig. 4 - Simplified schematic of hydraulic drive system

through the servo valves, resulting in motion which is transferred to the gearbox, to the pinion gear, and back to the opposing gearbox which then drives the opposing motor as if it were a pump. The direction of this pressure difference, therefore, determines the direction of rotation of the antenna. The pressure common to both motors at any time torque biases the system, thereby minimizing backlash and increasing system stiffness. The minimum bucking torque referred to the output axis is approximately 90,000 lb-ft.

Hydraulic drive power is provided to both axes by a pressure-compensated pump operating at approximately 3500 psi, but, because wind gusts can cause momentary pressure increases, the maximum pressure is restricted to about 4100 psi by a relief valve. The hydraulic fluid is forced from the hydraulic power unit through the piping system, cable wrap, and rotary joint to the manifold assemblies in each axis. Accumulators along the supply lines absorb oil surges in the prime hydraulic power lines. Separate filters, accumulators, and valve systems are used to provide the 2000-psi oil flow used for the

pilot stages of the two servo valves. To keep the motor and pump from cavitating, the motor return and pump intake lines are supercharged to approximately 50 psi by a separate booster pump housed in the power stand.

The drive motors in each axis are coupled to the main drive gear through two speed-reducers, designed to provide maximum stiffness and having an overall reduction of 117.17 to 1. The gearboxes were conservatively designed and manufactured with one-piece gears and pinions, oversized shafts, oversized bearings, and a cast steel housing. The output stage is a planetary gear with a floating sun gear. The maximum input speed and the torque to the gearboxes are 827 rpm and 12,650 lb-in., respectively. The further reduce system nonlinearities, linear, low-noise dc tachometers are coupled directly to the input stage of gearing. At the input to the gearbox in each axis is a low-inertia, spring-loaded disc brake. These brakes, which are hydraulically released, are engaged either by command from the control console or automatically in case of lubrication power unit failure. When a brake is engaged, all drive power is removed from that axis.

Lubrication System and Hydrostatic Bearing

The lubrication power unit that supplies oil at three different pressures to various parts of the system is located in the tower base, adjacent to the hydraulic power stand. This unit pumps lubricant at 125 psi to the gearboxes, azimuth radial bearing, elevation gearing, meshing pinions, and bearing cartridges. The oil from the latter three drains to sumps located between the yoke section and the elevation housing, where it joins all of the other lubricating oil in draining into the azimuth housing sump through a suction pump. To keep the lubricating system at a reasonably constant temperature, oil at 25 psi is bypassed from the pump and circulated through a heat exchanger. A relief valve, set for approximately 25 psi, opens when the bypass pressure is exceeded and dumps the bypass flow directly back into the tank for cold starts.

The opposed thrust hydrostatic bearing (Fig. 5) basically consists of a bearing stator, a rotor having upper and lower bearing surfaces and an integral ring gear on its inner circumference, and compensating, flow-restricting capillaries. The bearing stator, which is secured to the azimuth housing, is a machined Mehanite (a type of graphite bearing cast iron) casting handscraped to close tolerances. The upper and lower bearing surfaces are made of steel, also finished to close tolerances. Around the circumference of the upper and lower faces of the stator are 24 equally spaced capillary pairs, each ending in a shallow pocket. Radial grooves on the upper bearing provide a return path for the entrapped lubricant, which then escapes through the ring gear lubricating it. A precision, radial-thrust roller bearing keeps the hydrostatic bearing and azimuth turntable aligned with the azimuth axis and keeps the edge of the lower bearing from touching an inside edge of the stator.

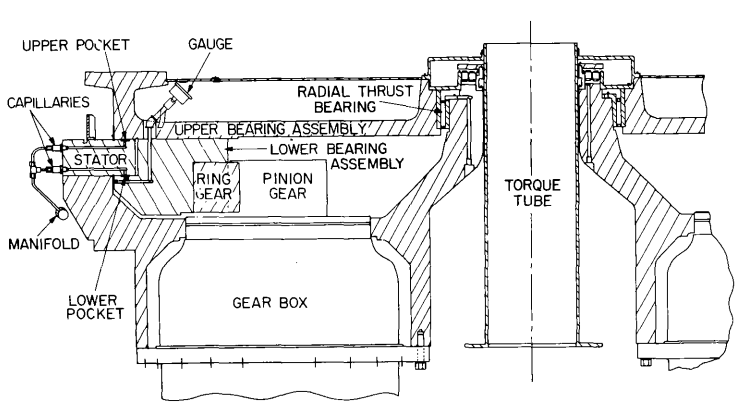

Fig. 5 - Hydrostatic bearing assembly

Oil at 1600 psi is pumped to the hydrostatic bearing manifold assembly, where it is forced through the capillary restrictions to pockets on the upper and lower faces of the stator. The resulting pressure on the upper bearing surface serves to support the great weight above the azimuth turntable, while the pressure exerted between the lower bearing and the stator keeps the lip of the tower bearing and ring gear assembly from touching the bottom of the stator. The resistance of the hydrostatic bearing to overturning moments is achieved by using flow-compensating capillaries, which maintain a relatively constant flow of oil between the bearing and stator surfaces. The pressure exerted between the bearing and stator surfaces under this condition tends to keep them parallel, thereby increasing the resistance of the hydrostatic bearing to large overturning moments. The stiffness of the bearing is 1.01×10^{-12} rad/in.-lb and contributes significantly to the overall stiffness of the system. The antenna is capable of operating in winds as high as 65 mph and withstanding overturning moments of 1.2×10^{6} lb-ft without contact between the bearing and stator surfaces, which are separated by only 0.002 in. Furthermore, because there is no contact between the bearing surfaces, the contribution to stiction and localized deformations associated with conventional ball bearings or roller bearings is reduced to a minimum.

Yoke and Elevation Housing

The hydrostatic thrust bearing supports the elevation drive housing, which is straddled by a U-shaped yoke pivoted about the elevation axis (Fig. 6). The yoke assembly then supports the equipment shelter, which houses the receiver preamplifiers and the transmitter power amplifier, in addition to the Cassegrainian reflector. Counterbalancing on the yoke compensates for the weight in the elevation axis so that the elevation drive motors experience only a small difference in load from zenith to horizon.

The elevation housing is a rectangular, box-type structure with a circular bottom flange mounted to the upper bearing and ring gear of the hydrostatic bearing. In order to assure stiffness, the stresses throughout the elevation housing are evenly distributed. This is accomplished in part by a smooth transition from the circular lower section to the rectangular upper section. The sides of the elevation housing that support the elevation bearing cartridges and the elevation gearboxes are made of double plate steel. Access to the top of the elevation housing, which is not stressed, is provided by a sliding door. Inside the elevation housing are the drive units, the hydraulic pumps and valves, instrumentation packages, and other enclosed components. Easy access to the interior of the elevation housing permits routine servicing and installation changes. To minimize temperature differences due to incident solar radiation, the outside of the elevation housing is covered by a 3-in. layer of expandable-bead polystyrene foam.

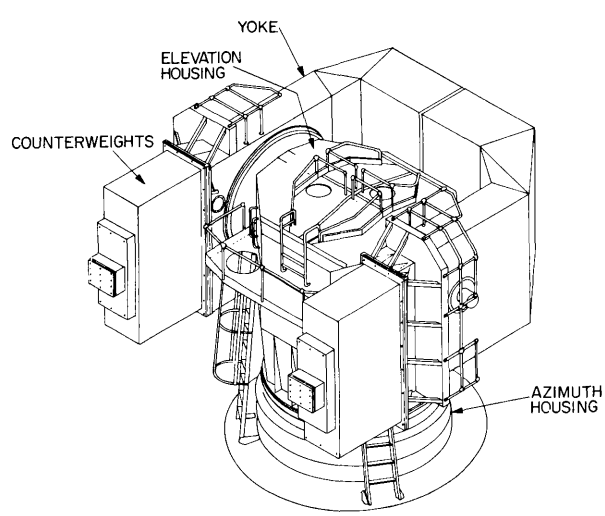

Fig. 6 - Yoke and elevation housing assemblies

The elevation housing supports the yoke assembly, which is a U-shaped structural member consisting of two L-shaped arms bolted together at their center flanges. The ring gear segments are mounted on the inside surface of each arm to engage the pinion gears from the gearboxes located in the elevation housing. The yoke sits astride the elevation housing and is mounted on the housing by means of two bearing cartridges, which are essentially hollow axles provided with oil and dust seals. The counterweights are attached to the arms on the open end of the yoke and are adjusted for complete counterbalancing of the antenna with a full ice load. With no ice load, the additional torque contributed by the counterweights allows the antenna to be more easily hand-cranked to zenith for stowing in the event of a complete loss of drive power.

The elevation bearing cartridge assemblies are mounted in the yoke arms through precision in-line bores with adjustments provided to center the yoke arms on the housing. Each bearing cartridge is provided with an inner and an outer shaft, rotating on precision roller bearings. A passage, called the yoke tunnel, is provided through the top of the yoke to the reflector mounting pads. A set of adjustable mirrors is located inside the yoke tunnel for precisely determining the optical axis of the antenna.

Reflector and Subreflector

The Cassegrainian reflector on the Waldorf antenna consists of a 6-ft hyperbola supported by a quadripod from a solid-surface, 60 ft parabolic reflector backed up by a trusswork of aluminum box beams radiating from a central hub (Fig. 7). The primary reflector is a 60-ft-diameter parabolic surface having an f/D ratio of 0.3. The reflective surface is formed from a series of solid-surface, bonded, aluminum honeycomb sandwich panel assemblies divided into 24 equal radial sections with two panels in each section. These panels are joined together so as to form a continuous load-bearing, deformation-resistant, reflective surface with no gaps between the individual panels in the assembly. The honeycomb sandwich is attached to a backup structure with adjustable supporting pads. These pads provide a means for adjusting the reflecting surface to the best-fit parabolic contour. The trusswork of aluminum box beams, which supports the parabola, consists of 24 equally spaced ribs radiating from a hub assembly and separated by intercostal beams. The hub assembly is a cylindrical aluminum weldment that serves as the main structural element in the reflector assembly by acting as the core into which all of the reflector loads and deflections react. In addition, the hub serves as an electronics equipment shelter for the receiver preamplifier, the transmitter power amplifier, and the feed assembly. Access to the equipment shelter is provided by a hatchway on the side of the hub between the ribs and by a sliding door at the top of the yoke tunnel, which forms part of the floor inside the equipment shelter. A walkway surrounds the base of the hub and is in turn enclosed within an aluminum shear web, which stiffens the trusswork to interaction between the ribs. A ladder located near the hatchway on the equipment shelter leads to a trap door in the reflector and thereby provides easy access to the antenna surface.

The secondary reflector assembly is a 6-ft-diameter hyperboloid made from a thin-walled aluminum casting. A quadripod comprised of four equally spaced struts supports the subreflector assembly. The apex of the quadripod is a rigid, one-piece aluminum weldment to which the subreflector assembly is attached. Remotely controlled electric actuators provide the means for axial and angular adjustment of the subreflector position. A mirror located at the vertex of the hyperbola and perpendicular to its axis of revolution is provided for optically establishing the subreflector alignment.

Together, the primary and secondary reflectors form an exceptionally stiff Cassegrainian reflector. Although the reflector weight is approximately 11 tons, the deflection due to gravity as measured at the vertex of the subreflector is only 0.14 in. between zenith and horizon. Further measurements with a precision parabolic template demonstrated that

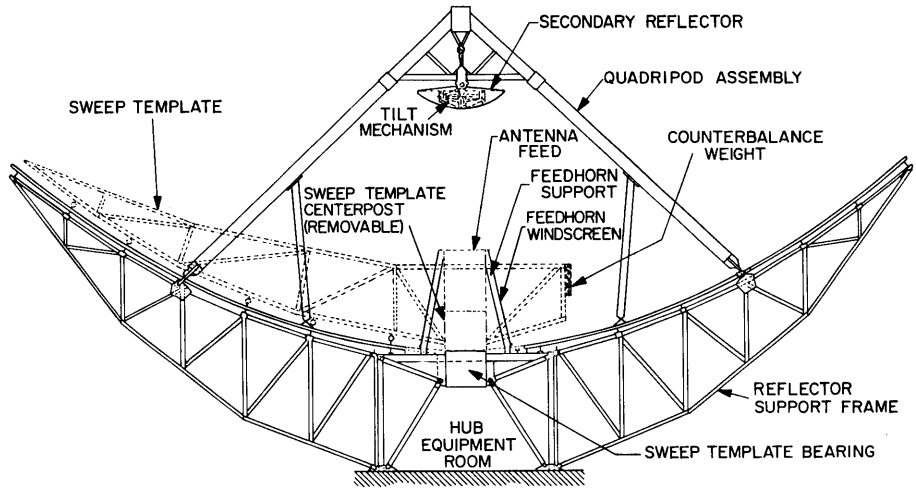

Fig. 7 - Cassegrainian reflector assembly

the surface accuracy of the paraboloid was slightly better than the specified 0.022-in. rms accuracy for the primary surface. Because of the number of scheduled experiments and the absence of an adequate test range, accurate measurements of the rf performance parameters have not been made for the Waldorf antenna. To make such measurements, a 60-ft X-band antenna requires a test range approximately 11 mi. long with as few intervening obstacles as possible to reduce unwanted reflections. By these criteria, the La Posta, California, antenna has an excellent test range. The measured gain of the La Posta reflector, which is identical to the one at Waldorf, is reported to be 61.5 dB with a beamwidth of 0.143° at 8 GHz. This provides an efficiency of 60.2 percent for the 60-ft-diameter aperture.

SERVO CONTROL

Servo System

The servo system is basically comprised of three loops in each axis, forming a conditionally stable control system. A pressure differential loop is enclosed by a velocity (tachometer) loop which is enclosed by the position loop. The pressure differential loop provides a means of linearizing the hydraulic valve response, damping the hydraulic resonances, and stabilizing the velocity loop. The velocity loop linearizes the motor response, resists stiction and wind torques, and provides the desired dynamics for stabilizing the system. The position loop permits the antenna to be positioned by the operator, a computer program, the automatic tracking receiver, or any other control source.

The final acceptance tests for the Waldorf 60-ft X-band facility were conducted in March 1967. The results of these tests justified the efforts that were expended in designing stiffness and instrumentation quality into the antenna. The performance of the servo system was evaluated by measuring such key parameters as the locked-rotor resonant frequency, its scan capability, low-rate performance, frequency and phase response, and bandwidth characteristics. Repeated measurements were made to optimize the system performance for various dither levels and adjustments to the automatic tracking control, and then the best of these were selected.

The locked-rotor resonant frequency is a significant parameter because it effectively establishes the upper bandwidth limit of the servo system. Simply defined, it may be regarded as the lowest frequency of mechanical resonance of the antenna mass as seen by

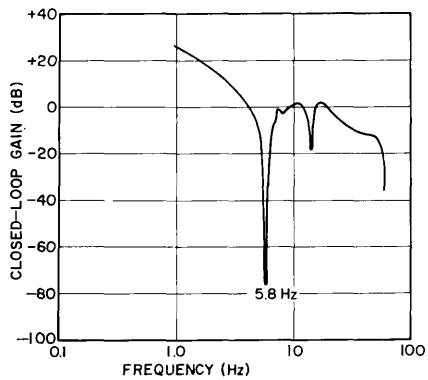

Fig. 8(a) - Azimuth locked-rotor response

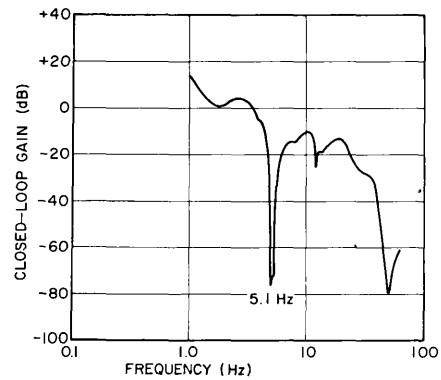

Fig. 8(b) - Elevation locked-rotor response

the drive motors coupled with the spring of the gear train when the motor shaft is locked. The resonance is seen as a sharp minimum in the frequency response curves for the velocity loop. The locked-rotor resonant frequencies of 5.8 Hz in azimuth and 5.1 Hz in elevation are particularly good for an antenna as large as the one at the Waldorf site (Fig. 8).* Representative measured values for 60-ft antennas designed with stiffness as a primary factor have generally been in the range of 3.5 to 4 Hz.

Measurements of the closed-loop frequency response and bandwidths in both axes were made with a digital servo analyzer, starting with the innermost loop and successively closing interior loops until, for the position loop, all of the loops were closed. Figures 9 through 11 show the Bode plots and bandwidths for each of the loops in both axes.

The performance of the Waldorf 60-ft antenna at low angular velocities was evaluated because of its importance to the smooth precise tracking of celestial sources and synchronous or nearly synchronous satellites. The parameters which were chosen as a measure of this performance included the mean error, rms error, rms jitter (or standard deviation), and peak error in position, where the position error is the difference between the command position and the actual position. To obtain and process the information necessary for these measurements, the antenna was commanded to track a point in fixed right ascension and declination and therefore to track at sidereal velocity. A special servo testing program for the on-site computer was selected by the operator, who determined the axis on which the measurements were to be performed. Once the program had been initiated, the antenna position error was sampled and stored at a rate of 128 times per second until 4096 samples were completed. With these data, the program then computed the mean error, rms error, rms jitter, and peak error in position as recorded during the sampling period (32 sec). This process was repeated several times for both axes, first tracking a point in fixed right ascension-declination and then tracking nearly synchronous satellites at velocities slower than sidereal. Figure 12 is a typewriter printout, in decimal fractions of a degree, of the results of these measurements. The left-hand column lists the results for measurements performed while tracking a fixed point in right ascension-declination. The right-hand column lists the results for measurements performed while tracking a nearby, synchronous satellite.

Modes of Control

The second fundamental quality required in a research facility such as the one at Waldorf is flexibility. Flexibility in a system is determined by the degree to which that system is capable of conforming to new or changing attentions. It is achieved in the

*In servo measurements it is common practice to define the decibel as 20 $\log_{10}$ (output/input).

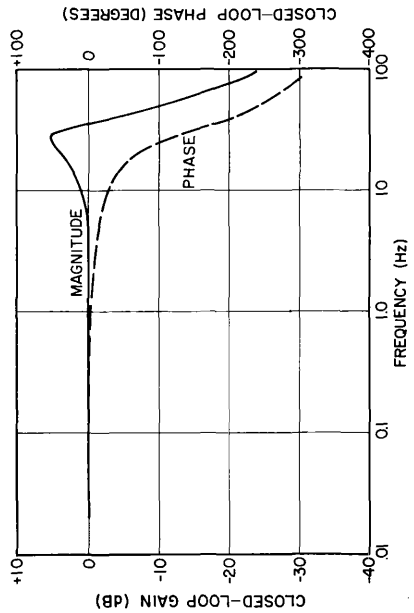

Fig. 9(a) - Azimuth pressure-differential loop response

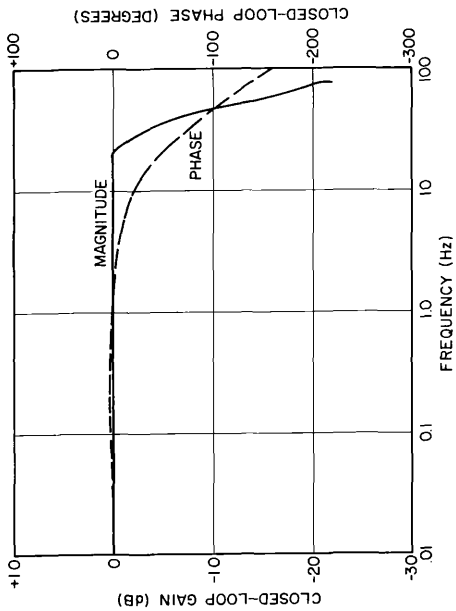

Fig. 9(b) - Elevation pressure-differential loop response

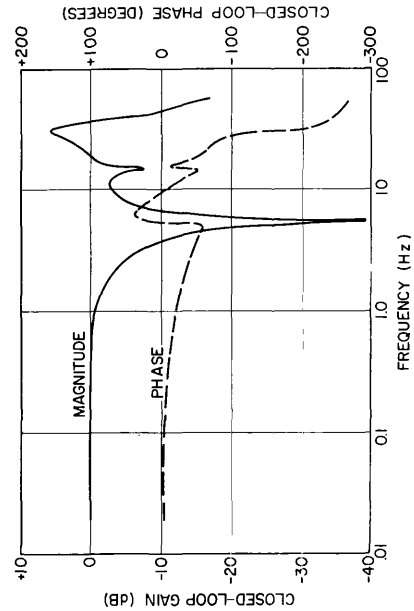

Fig. 10(a) - Azimuth velocity loop response

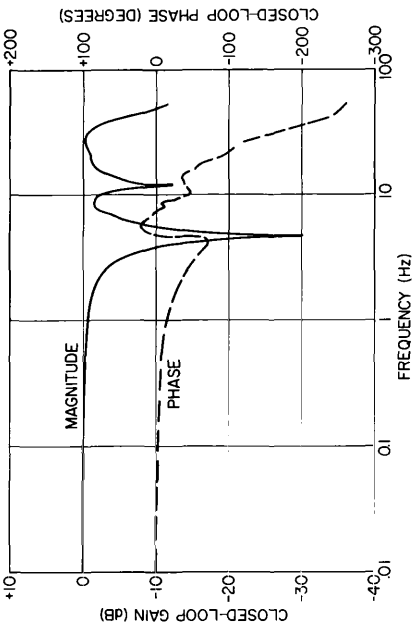

Fig. 10(b) - Elevation velocity loop response

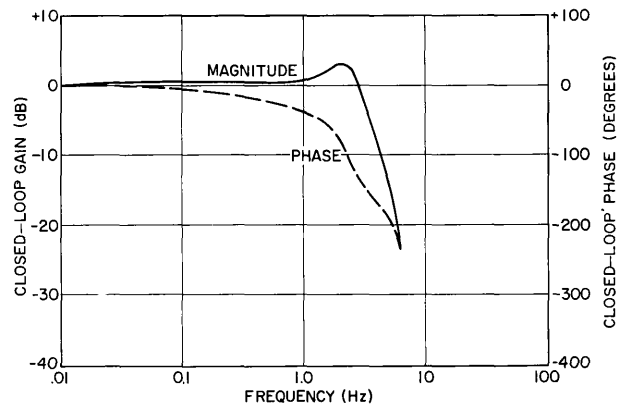

Fig. 11(a) - Azimuth position loop response

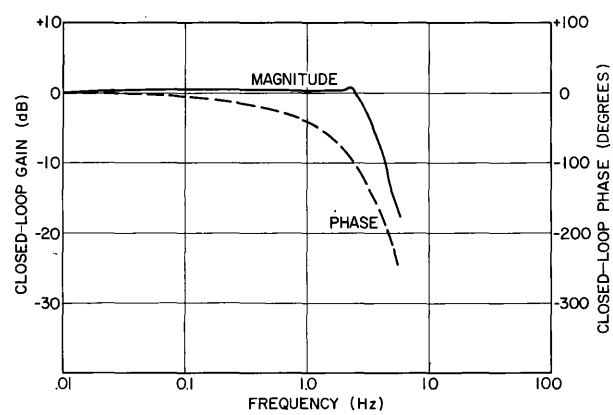

Fig. 11(b) - Elevation position loop response

```
NACSYS:   servotst

INITIATE SERVO TEST
TYPE AZ., ELEV., OR EXIT.

SERVO:  az.***

MEAN ERROR =  0.000
RMS JITTER =  0.001
RMS  ERROR =  0.001
PEAK ERROR =  0.002

SERVO:  elev.***

MEAN ERROR =  0.001
RMS JITTER =  0.000
RMS  ERROR =  0.001
PEAK ERROR =  0.002

SERVO:  az.***

MEAN ERROR =  0.000
RMS JITTER =  0.001
RMS  ERROR =  0.001
PEAK ERROR =  0.003

SERVO:  elev.***

MEAN ERROR =  0.001
RMS JITTER =  0.000
RMS  ERROR =  0.001
PEAK ERROR =  0.002

SERVO:  exit.
```

```
NACSYS:   xeq./=17112

INITIATE SERVO TEST
TYPE AZ., ELEV., OR EXIT.

SERVO:  az.***

MEAN ERROR = -0.000
RMS JITTER =  0.001
RMS  ERROR =  0.001
PEAK ERROR =  0.002

SERVO:  elev.***

MEAN ERROR =  0.001
RMS JITTER =  0.001
RMS  ERROR =  0.001
PEAK ERROR =  0.003

SERVO:  az.***

MEAN ERROR = -0.000
RMS JITTER =  0.000
RMS  ERROR =  0.000
PEAK ERROR =  0.001

SERVO:  elev.***

MEAN ERROR =  0.000
RMS JITTER =  0.001
RMS  ERROR =  0.001
PEAK ERROR =  0.003

SERVO:  exit.
```

Fig. 12 - Sidereal rate servo pointing errors

Waldorf 60-ft antenna in five ways: (a) through several modes of control, (b) through the options available within a given mode of control, (c) through the ability of the operator to define his requirements for control in contradistinction to machine-dictated requirements, (d) through the variety of compatible equipment available for receiving and transmitting at X- and S-band frequencies, and (e) through the capability to incorporate feed and electronic equipment for operations at other frequencies.

Several different modes of tracking and control are provided so that the Waldorf antenna can meet a variety of needs. These include the slew mode, the manual positioning mode, the synchro slaved mode, the digital slaved mode, and the automatic tracking mode. In each of these modes, with the possible exception of the slew mode, tight system performance is required, primarily because of the small beamwidths associated with large parabolic antennas operating at X-band and higher frequencies. The slew mode of control enables the operator to move the antenna at a constant velocity, of up to 6 deg/sec in azimuth and/or elevation for coarse positioning, such as that required in maintenance. The manual mode, on the other hand, permits handcrank positioning of the antenna to within 0.001° when required. The synchro slaved mode of operation allows the antenna to be controlled by some remote synchro transmitting source, such as an optical tracker or another antenna. The digital slaved and automatic tracking modes, however, are considered the primary means of control. The digital, or computer, mode commands the antenna position through a CDC 924A general-purpose digital computer. This mode allows the operator to designate a fixed antenna position in either azimuth and elevation or in right ascension and declination, in addition to program tracking of a satellite or celestial object which has been previously defined. In addition to pointing the antenna to the program command position, the operator may also select one of several computer-controlled scans centered around the program tracking command in order to acquire a signal. In the automatic tracking mode, the computer is also used for the purpose of acquiring a signal but will relinquish control to the autotrack receiver once the antenna has locked onto the signal. For automatic tracking, either X-band or S-band autotrack feeds may be used.

Encoding System

To maintain high performance, the antenna employs special multipole synchros for primary measurement of azimuth and elevation angles. These position transducers consist of 72-pole and 2-pole windings directly coupled to the corresponding axes with no intervening gearing. For the azimuth axis, the necessity for providing passage through the center of the transducer for all cables, hoses, waveguides, etc. that undergo azimuth rotation requires a large pancake configuration with an 18-in.-diameter hole. The stator of this unit is coupled to the stationary portions of the antenna, while the rotor is attached to the azimuth turntable. In essence, the bearings for the azimuth transducer are the antenna azimuth bearings. For the elevation axis, however, the existence of a separate passage for cables, etc. on one side of the yoke and the mounting of the position transducer on the opposite side negates any requirement for a center hole. This permits a self-contained unit having integral bearings. Precise control is achieved through a zero-backlash mechanical coupler. Both the azimuth and elevation position transducers are pressurized with dry nitrogen, which provides a controlled environment free from water vapor and dust.

Digitization of the 36- and 1-speed synchro outputs is accomplished in the control room by encoding equipment having a binary output with a resolution of 19 bits and an accuracy of 18 bits. The binary measure of antenna position is used as feedback for closed-loop antenna control in the digital mode and, after additional processing, for the digital display of antenna position. In addition, two sets of fully buffered, equivalent 36- and 1-speed synchro outputs having an accuracy of 15 sec of arc are provided for the manual positioning and synchro slaved modes.

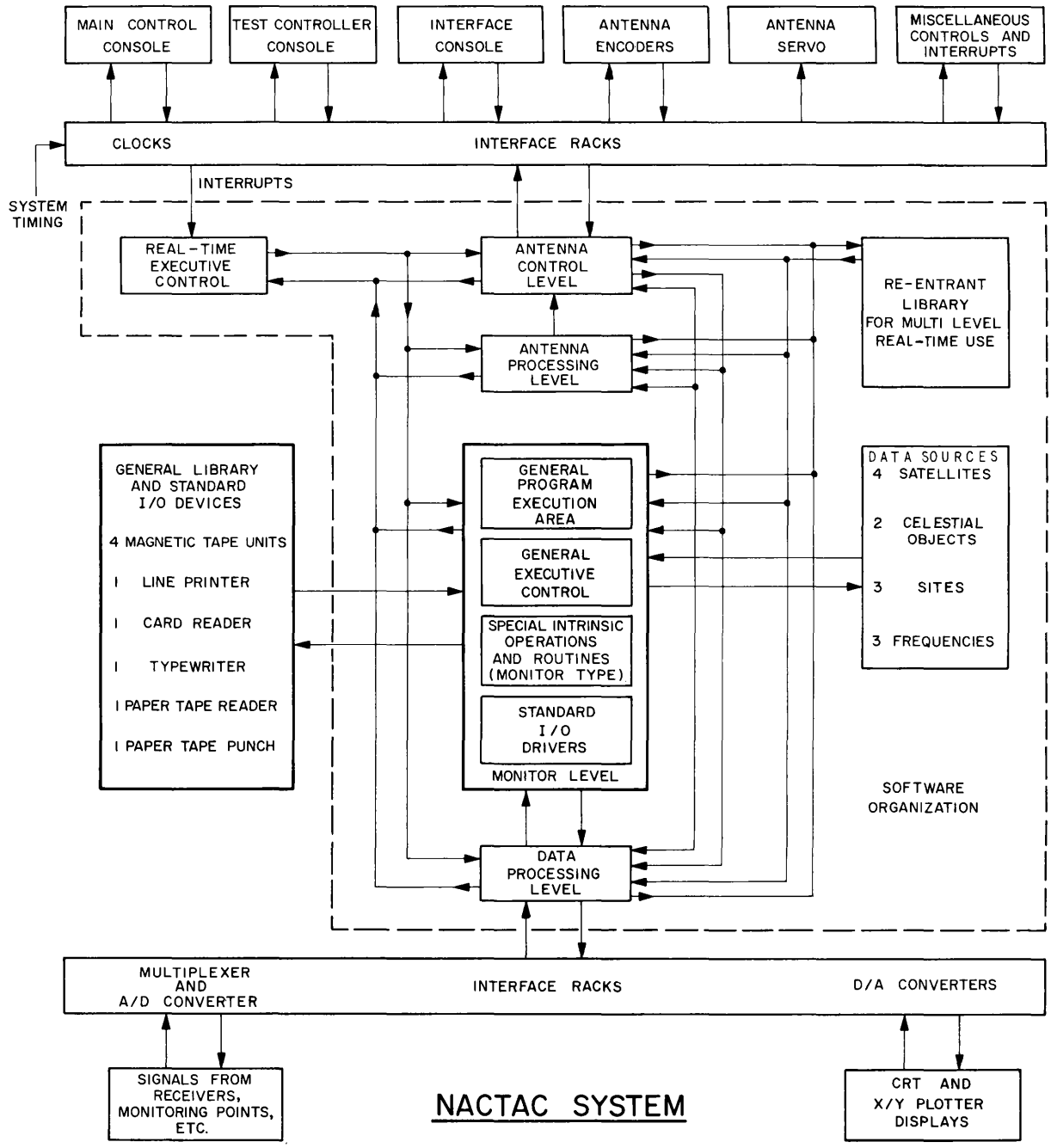

Fig. 13 - NACTAC system block diagram

REAL-TIME DIGITAL CONTROL SYSTEM

The NRL-designed and -developed Navy Antenna Computer Tracking and Command (NACTAC) system is the real-time digital control system for the Waldorf 60-ft X-band antenna. The NACTAC system consists of both hardware and software elements that serve as primary control for the antenna as well as for the acquisition of data for processing and display (Fig. 13). As the communications link between the operator and the antenna, the software programs allow the operator to (a) enter program source data such as that listed here; (b) designate a fixed antenna position; (c) select program tracking of a satellite or celestial object; (d) generate spiral or elliptical scans centered on fixed or program tracking points; (e) execute any one of a series of acquisition sequences, which,

upon acquisition, transfer control of the antenna to the automatic tracking mode; (f) enter program offsets in azimuth, elevation, and time; and (g) display the time, the antenna position, position error, or velocity and data on the local and on one remote site for an operator-defined source. NACTAC source data may be entered by the operator at any time prior to its use and can include information on sites, frequencies, refraction, satellites, the sun, the moon, planets, and stars. The operator may designate a fixed antenna position in coordinates of azimuth and elevation or right ascension and declination. Alternatively, he may select program tracking of some satellite or celestial object. To do this, the operator need only designate the source for which the data are desired, and the program will compute the object position in real time from such data as orbital elements and Naval Observatory data. When the antenna is in the digital mode, it will track the operator-designated program source, or any other compatible remote source the operator selects.

Time offsets and angular offsets in azimuth and elevation can be entered by the operator through thumbwheel switches on the control console for situations which require operator correction of the programmed tracking path. In every case, real-time digital displays of the antenna position and the time are provided for the operator. If he so chooses, the operator may also have the difference between the antenna position and the programmed position displayed or, with the source object and frequency defined, the source range, range rate, doppler shift, and free-space attenuation. In the digital mode, the operator may select one of several scan acquisition sequences centered around the programmed tracking position. With the exception of certain cases, the operator may choose either spiral or elliptical scans whose parameters and scan velocities are designated through thumbwheel switches on the control console. When a signal from either of two receivers is available during an operator-selected scan, a momentary acquisition will cause control to be transferred to a series of computer-controlled procedures leading to acquisition and automatic tracking.

In addition to its function as the prime controller for the Waldorf 60-ft X-band antenna, the NACTAC system also provides for the real-time acquisition, processing, and display of experimental data. Among some of the programs presently available, for example, are the servo test program previously mentioned, an antenna pattern recording program, a program to acquire data for computing and displaying periodograms by fast Fourier transform techniques, and a program for converting acquired data into a form suitable for processing on other computers such as the CDC 3800 at NRL.

The hardware portion of the NACTAC system includes a CDC 924A general-purpose computer having a 16,384-word memory, four magnetic tape units, a card reader, a typewriter, a line printer, and other standard computer input/output (I/O) devices (Fig. 14). Control of the antenna is shared between four consoles: the main control console, the computer console, the interface console, and the test controller console (Fig. 15). Additional capacity is built into the system by way of 160 multiplex channels that are available from the interface. Inputs to the system include the standard computer I/O handware as well as thumbwheel switches and software-controlled, lighted pushbutton switches. The lighted pushbutton switches do not provide direct control over any interface circuits with the exception of those controlling the real-time clock. The actuation of these switches is sensed by the software program to which the computer responds with software control of the associated light. The system outputs include the standard computer I/O hardware, an x-y plotter, oscilloscopes, and digital in-line displays.

The software portion of the NACTAC system, called NACTAC Operating System (NACSYS) has the capability of operating in either a real-time or non-real-time mode. In the non-real-time mode, NACSYS consists of a basic monitoring system, I/O drivers, and general executive routines for calling and executing internal and external routines. Internal routines are contained entirely within the NACSYS program and perform such

Fig. 14(a) - Portions of the CDC 924A computer

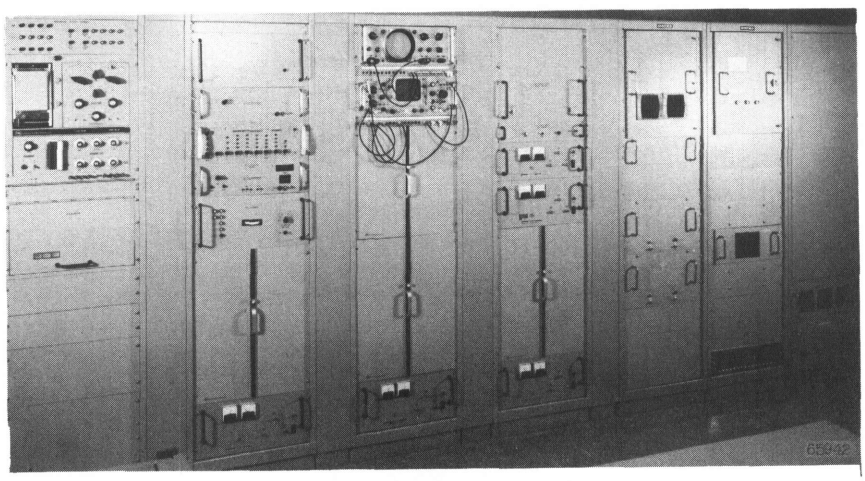

Fig. 14(b) - Computer interface equipment

functions as the control, reading, writing, and listing of tapes; whereas external routines are called from a general library (master) tape for execution, after which control is returned to the monitor portion of NACSYS. Therefore, when in non-real-time mode, this system can be compared to a batch-processing system having typewriter control.

In the real-time mode, NACSYS is a multilevel, multiprogrammed, time-shared system consisting of four primary levels with fixed priorities, under the control of a special real-time executive. In addition to these four primary levels, there are also a number of sublevels which have no assigned priorities but which operate on a first-come, first-served basis. The basic non-real-time portion of the system operates on the monitoring level in real time, retaining all of the system capabilities with the exception of certain routines on the master tape which are only allowed in non-real-time operation.

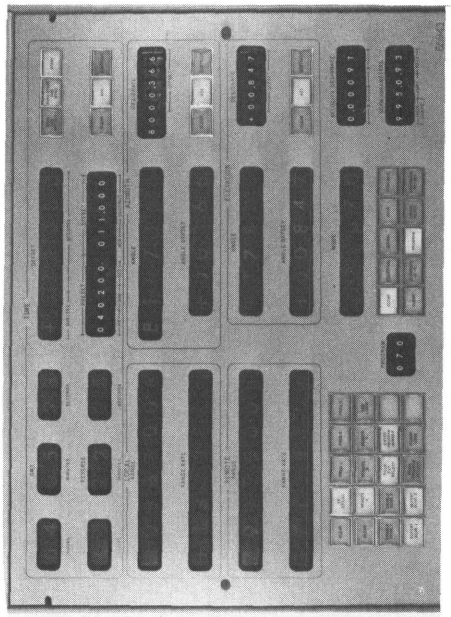

Fig. 15(b) - Main control console

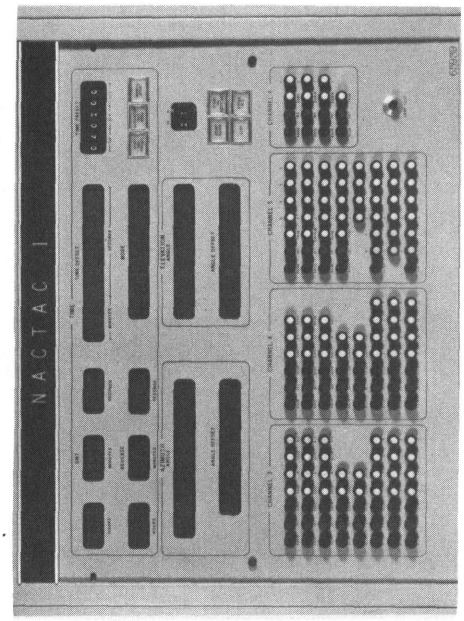

Fig. 15(d) - Interface console

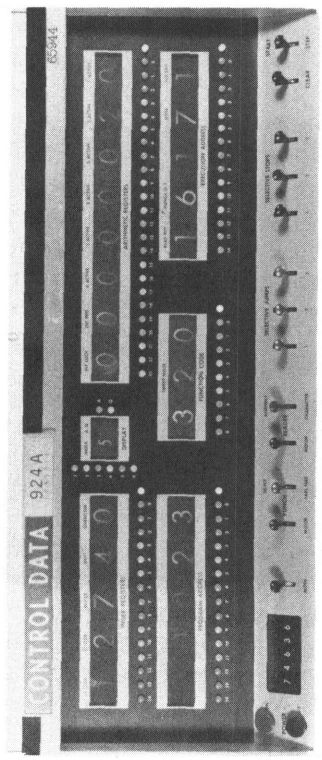

Fig. 15(a) - Computer console

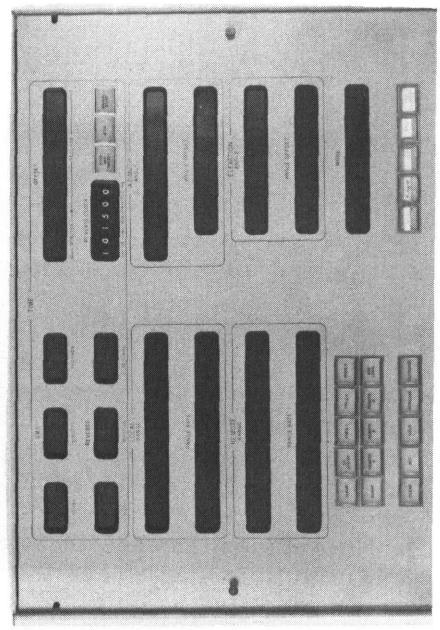

Fig. 15(c) - Test controller console

```
NACSYS:   nactac.

INPUT INITIAL INFORMATION

TYPE DATE (MON/DAY/YR):  08/06/68
TYPE EQUATION OF EQUINOXES:  -.143

MAKE INPUT REQUESTS

NACSYS:   site.
DESTINATION: SITE.a
IDENTIFY:    SITE NO.001
CARD OR TAPE:    t
EXECUTED:    19h 33m 02s

NACSYS:   freq.
DESTINATION: FREQ.1
INPUT VIA:   TYPE
MHZ OR GHZ:  8000mHz
EXECUTED:    19h 33m 33s

NACSYS:   refr.
N(S) EQUATION = A
N(S) DIRECT   = B
N(S) STANDARD = C
METHOD (A,B,C): a
TEMPERATURE (°F, °C, OR °K)     = 90.0f°
PRESSURE (IN OR MM HG, OR MB) = 30.00in
REL HUMIDITY (% OR DECIMAL #) = 80%
N(S) * = 409.24
EXECUTED:    19h 34m 44s

NACSYS:   planet.
IDENTIFY:    PLANET NO. 0
DESTINATION: C.1
START TIME:  (MON/DAY/YR)= now
CARD OR TAPE:    t
EXECUTED:    19h 35m 43s

NACSYS:   sun.
DESTINATION: C.2
START TIME:  (MON/DAY/YR)= now
CARD OR TAPE:    t
EXECUTED:    19h 36m 35s

NACSYS:   orbit.
DESTINATION: S.1
IDENTIFY:    CATALOG NO. 02215
CARD OR TAPE:    t
EXECUTED:    19h 37m 27s

NACSYS:   look.
DATA SOURCE: c.1
PRIMARY:     SITE.1
SECONDARY:   SITE.0
START DATE:  MON/DAY/YR = now
START TIME:  HR MIN SEC = 00 00 00
INCR. TIME:  HR MIN SEC = 01 00 00
DATA POINTS = 024
OUTPUT UNIT = 0..

NACSYS:   track.
DATA SOURCE:  s.1
EXECUTED:    19h 43m 15s
```

Fig. 16 - A sample NACTAC dialog; upper case letters denote a computer request, lower case an operator's reply, except for the times at which operations are executed

In the real-time mode, a comprehensive, fully reentrant library is available for use by any of four primary time-shared levels of programming. Data stored in the core memory on up to four satellites, two celestial objects, three sites, and three frequencies are also available to any of the four primary levels. These data are entered and processed by routines designated by the monitor level.

The NACTAC program functions as a dialog between the operator and the computer using the typewriter as an intermediary (Fig. 16). When the program is initially activated, it requests the operator to input information, which must be in correct format. After this has been done, another request is made. This continues until no further information is needed from the operator to complete the routine. For input data, the operator may store information on the atmospheric refraction, three sites, three frequencies, four satellites, the moon, and two other celestial objects (planets, the sun, and stars). Concurrently with digital control of the antenna using one data source, the operator may obtain, for any other defined data source, line-printer listings of azimuth and elevation positions as well as range and range rate for two sites for operator-specified start time, time interval, and number of data points.

The NACTAC system is further operator oriented in that once the operator has corresponded with the computer by supplying the needed information to the operator-requested

subroutines, he is free to forget the computer except for designating the object to be tracked. Once the necessary information has been entered and program tracking has been initiated, all further dialog between the operator and the computer regarding antenna control is carried out through lighted pushbutton switches and their associated thumbwheel switches and in-line displays on the antenna control console. The pushbutton switches do not provide direct control over any interface hardware. Instead, the actuation of these switches is sensed by the NACTAC program to which the computer responds with the requested software control. The pushbutton switches, thumbwheel switches, and in-line displays permit the operator to select the mode of digital control; to define and select elliptical or spiral scans; to enter offsets in azimuth, elevation, and time; and to display range and range rate or free-space attenuation and doppler shift to a source object for both the Waldorf site and some other previously defined remote site. Moreover, all of the operations involving pushbutton control are fail-safe; that is, if the operator attempts to initiate action out of correct sequence or if certain elements have not been properly defined, either nothing happens or a flashback is returned by the pushbutton.

In designing the digital control system for the Waldorf antenna, operator-oriented software programming was emphasized wherever possible instead of hardware equipment because of the ready adaptability of the software. The result has been a significant increase in the overall flexibility of the system from the standpoint of available options as well as the operator's ability to define his requirements.

RECEIVING AND TRANSMITTING SYSTEMS

The receiving and transmitting systems for the Waldorf antenna undergo frequent changes to expand and update system capabilities. For this reason, the following discussion is limited to the system's initial capabilities. The receiver is designed to be a versatile research tool. To meet a variety of requirements there are four front-end preamplifiers: a helium-cooled, X-band maser; a nitrogen-cooled, X-band parametric preamplifier; and an S-band and an X-band tunnel diode preamplifier. For very low-noise temperature applications, the X-band maser is used for its 14°K noise temperature. At 8 GHz, it has an instantaneous half-power bandwidth of 15 MHz with gains between 19 and 27 dB. In most cases, however, the X-band parametric amplifier is used because of its much broader frequency coverage and relatively good noise temperature. This parametric amplifier can be tuned from 7.2 GHz to 8.4 GHz, having a noise temperature of only 77°K. It has a nominal gain of 20 dB with an instantaneous bandwidth of 20 GHz between 1-dB points. Unlike the maser, it may be remotely tuned from the antenna control building. An S-band tunnel-diode preamplifier covering 1.7 to 2.4 GHz for applications at S-band frequencies and an X-band tunnel-diode preamplifier covering 7.125 to 8.5 GHz are available. The amplified X- and/or S-band signals are converted down to an intermediate frequency of either 60 MHz with a half-power bandwidth of 19 MHz or 70 MHz with a half-power bandwidth of 20 MHz. From this point, a variety of receiving equipment is available, depending upon the nature of the particular experiment, including a high-quality phase-locked receiver and several radiometers.

The transmitter is designed to operate within the frequency band between 7.125 and 8.5 GHz with a bandwidth of 33.7 MHz between 1-dB points. It presently operates between 7.9 to 8.150 GHz using a 25-kW water-ethylene glycol-cooled klystron, driven by a traveling wave amplifier. The output of the klystron can be continuously varied between 25 W and 25 kW by means of an adjustable attentuator at the klystron input. Even lower power levels may be obtained by suitable external controls. Two modulating schemes are used: external modulation as supplied by the drive signal and internal modulation of the anode voltage.

To further increase the flexibility of the antenna, modularized feed systems are used. The first feed system consists of a 1.7- to 2.4-GHz single-channel monopulse

receiving and tracking feed with a 100-Hz scan frequency. The right- and left-hand circular polarization can be remotely controlled, or, with a feed modification, it may be changed to a vertical linear polarization. The second feed operates at X band between 7.2 and 8.4 GHz as a single-channel monopulse tracking and receiving feed with a 70-Hz scan frequency. The same polarization controls are available for this feed as were available for the first system. The third feed system also operates at X band between 7.2 and 8.4 GHz but operates as a low-noise transmit–receive feed with up to 25 kW when water cooling is used. Right-hand circular, left-hand circular, or vertical linear polarization are selected by manually changing waveguide sections. The fourth feed transmits between 7.9 and 8.4 GHz while receiving from 7.25 to 8.4 GHz. The simultaneous transmit–receive capability is made possible by manually selecting opposite circular polarizations for the desired operating conditions. Provisions have also been made for inserting the necessary rejection and bandpass filters. The S-band feed is semipermanently installed. Any one of the other feeds may be installed in its center. All of the X-band feeds may be removed and reinstalled without recalibrating the system.

CONCLUSION

At the Waldorf Microwave Space Research Facility, NRL has an antenna system providing the instrumentation flexibility needed for diverse satellite communications studies. As well as providing the presently employed X-band capability, it is expected that the emphasized attributes of stiffness and control will extend the useful frequency range of this system above 35 GHz. In fact, the second system procured under the assigned task is being used by NELC in a millimeter program at both K_u and K_a frequency bands.

The Waldorf system has already proven to be an invaluable tool in the development of advanced modems for Naval satellite communications systems, and for investigating jamming, multiple access, and power-balancing problems associated with the use of hard-limiting repeaters. To further enhance the general-purpose usage of this instrument, continuing investigations will be performed to gain full knowledge of its capabilities and limitations. These will include a study of systematic and random pointing errors to provide the greatest possible degree of calibration accuracy and precision.

ACKNOWLEDGMENTS

Special appreciation is extended to Mr. R.W. Alvarez of the Engineering Services Division for his full-time services in the development, installation, and testing of the antenna structure. The efforts of Satellite Communication Branch personnel are also acknowledged; in particular, Mr. R.A. LeFande for his association with the antenna development and Mr. C.J. Stillings for his work both as an employee of the Philco Technical Representative Division and later as an NRL employee in the development of special digital interface equipment for the real-time digital control. Special mention is due Mr. R.E. Cushing, whose untiring efforts in implementing an improvement program since contractual acceptance have made continuing effective utilization of this antenna system possible.

Security Classification

DOCUMENT CONTROL DATA - R & D

(Security classification of title, body of abstract and indexing annotation must be entered when the overall report is classified)

1. ORIGINATING ACTIVITY *(Corporate author)* Naval Research Laboratory Washington, D.C. 20390	2a. REPORT SECURITY CLASSIFICATION UNCLASSIFIED 2b. GROUP

3. REPORT TITLE

THE NRL MICROWAVE SPACE RESEARCH FACILITY: DESIGN AND DEVELOPMENT OF THE 60-FT X-BAND ANTENNA

4. DESCRIPTIVE NOTES *(Type of report and inclusive dates)* This is a final report on one phase of the NRL Microwave Space Research Facility. Work on other phases is continuing.

5. AUTHOR(S) *(First name, middle initial, last name)*

Charles A. Bass; David H. Townsend

6. REPORT DATE August 11, 1969	7a. TOTAL NO. OF PAGES 26	7b. NO. OF REFS none
8a. CONTRACT OR GRANT NO. NRL Problem R01-36 b. PROJECT NO. XF 4822200-116/2116.5 c. SF 019 024, Task 7449 d.	9a. ORIGINATOR'S REPORT NUMBER(S) NRL Report 6921 9b. OTHER REPORT NO(S) *(Any other numbers that may be assigned this report)*	

10. DISTRIBUTION STATEMENT

This document has been approved for public release and sale; its distribution is unlimited.

11. SUPPLEMENTARY NOTES	12. SPONSORING MILITARY ACTIVITY Department of the Navy (Naval Electronic Systems Command and Naval Ship Systems Command), Washington, D.C. 20360

13. ABSTRACT

To extend the Navy's program in satellite communications, a fully steerable 60-ft X-band antenna system having a Cassegrainian configuration was recently completed at the Naval Research Laboratory's (NRL's) Microwave Space Research Facility at Waldorf, Maryland. It is designed for smooth, precise tracking at velocities from 1/10 sidereal rate to 6 deg/sec through the use of a hydrostatic bearing in the azimuth axis and an antibacklash hydraulic drive system. The 60-ft paraboloidal surface is constructed from solid-surface, 2-in. aluminum honeycomb panels with a nominal surface tolerance of 0.019 in. at zenith. The antenna can be operated in five different modes: slew, manual, synchro slaved, digital, and auto-track. In the digital mode, a general-purpose digital computer has been programmed to operate in a real-time, time-shared system for direct digital control of the antenna position, providing capabilities such as program tracking of satellites and automatic scan and acquisition sequences. The instrumentation flexibility of this system is enhanced by interchangeable feeds, a variety of S- and X-band pre-amplifiers, and a 25-kW X-band transmitter. The acceptance tests plus operational data indicate that the design and development objectives of instrumentation quality and flexibility have been achieved.

DD FORM 1 NOV 65 1473 (PAGE 1)

S/N 0101-807-6801

Security Classification

Security Classification

14. KEY WORDS	LINK A ROLE	LINK A WT	LINK B ROLE	LINK B WT	LINK C ROLE	LINK C WT
Cassegrain 60-ft reflector						
X-band antenna system						
Hydrostatic bearing						
Real-time digital control						
Electrohydraulic drive						
Cable wrap						
Encoding system						
Stiffness						
Servo system						
Foundation						
Satellite tracking						
Locked-rotor resonance						

DD FORM 1 NOV 65 1473 (BACK)
(PAGE 2)

Security Classification