NRL Report 6802
SECOND PRINTING

The Interaction of Radon Decay Products With Aerosols

A. W. SAUNDERS, JR., R. L. PATTERSON, JR., AND L. B. LOCKHART, JR.

Physical Chemistry Branch
Chemistry Division

December 31, 1968

NAVAL RESEARCH LABORATORY
Washington, D.C.

This document has been approved for public release and sale; its distribution is unlimited.

NRL Report 6802 (Second Printing) is being distributed to assure availability of correct copies. Some copies of the initial printing were found to contain improper pages.

CONTENTS

Abstract	ii
Problem Status	ii
Authorization	ii
INTRODUCTION	1
EXPERIMENTAL PROCEDURE	1
Instrumented Chamber	2
Aerosol	4
Radon	4
Radioactivity Measurement	5
RESULTS	7
Aerosol Measurements	7
Radioactivity Measurements	8
Effect of Wall Losses on Measured Atom Ratios of RaC to RaB (ρ values)	15
Filter Retentivity Measurements	19
CONCLUSIONS	19
REFERENCES	21

ABSTRACT

An instrumented plastic chamber with a 1.2-m^3 capacity has been constructed and used to study the stability of some submicron dioctyl phthalate (D.O.P.) aerosols and their interaction with the short-lived radioactive decay products of radon (^{222}Rn). The degree of attachment of the radon decay products to the D.O.P. aerosols in this chamber has been shown to be a function of the relative areas of the aerosol and wall surfaces. At high aerosol concentrations (10^5 particles/cm^3), 90% or more of the short-lived decay products are attached to aerosol particles. At lower aerosol concentrations and particularly when convection increases the availability of the walls for deposition, the airborne radioactivity is much less.

Under the proper conditions appreciable quantities of unattached radon descendants will remain airborne. A few preliminary studies with these "free" atoms or simple molecules have shown that they are effectively retained by fibrous filters. They thus provide a useful tool for evaluating the retentivity of filter media toward extremely small particles and for studying the mechanism of particle capture through diffusive processes.

PROBLEM STATUS

This is an interim report; work on this problem is continuing.

AUTHORIZATION

NRL Problem C06-06
Project RR 001-05-42-4851

Manuscript Submitted September 4, 1968.

THE INTERACTION OF RADON DECAY PRODUCTS WITH AEROSOLS

INTRODUCTION

Atmospheric aerosols are composed of a mixture of materials covering a wide range of compositions and sizes; these are continually undergoing complex interactions with one another and other materials in their environment. Some of these aerosols result from natural phenomena, such as pollen release, dust storms, or smoke from forest fires, but by far the majority of those encountered today are the result of man's activity or industry. The recognition of man's responsibility for the degradation of the atmosphere is the reason for the current demand for smoke abatement, automobile exhaust control, and air pollution control in general.

The complexity of the problem and the multitude of sources either contributing particulate matter to the atmosphere or releasing gaseous matter that later is converted into particulate matter ("smog") make a wholesale attack on the problem impractical. The various modes of research have involved individual studies of the sources of air pollutants, the chemical reactions going on in the atmosphere, and the air-cleaning mechanisms. It is the purpose of this report to demonstrate an application of radiotracer techniques to laboratory studies of aerosols and their interaction with their environment.

The growth of aerosols with time at the expense of similar sized or smaller particles through condensation or agglomeration process is well established. The "smaller" particles can be of atomic dimensions, as in the case of the attachement of radon daughters to natural atmospheric aerosols (1) or artificial aerosols (2); electrostatic charges may affect the rate of such attachment processes, but the presence of electrical charges is not a necessary condition for agglomeration to occur. As previous work at NRL has shown, randon (^{222}Rn) decay products, particularly the β-emitting radionuclides ^{214}Pb (RaB) and ^{214}Bi (RaC) with half-lives of 26.8 and 19.7 min, respectively, can be used to tag aerosols which can later be recovered by filtration and evaluated by standardized counting procedures (3, 4). The availability of filters with different retention characteristics employed as filter packs (5, 6) permits the study of the competitive absorption of radioactive atoms or ions by aerosols of different sizes. As a corollary to the above, aerosols tagged with radon daughter activity or containing built-in radioactivity (as ^{14}C in dioctyl phthalate or ^{35}S in H_2SO_4 smokes) can be used to evaluate the efficiency of particulate filters (7).

EXPERIMENTAL PROCEDURE

The experimental procedure involves introducing a known quantity of radon gas into a 1.225-m^3 chamber containing a well-defined aerosol or mixture of aerosols and following the changes in the quantity of filterable radioactivity as a function of time. A radioactively tagged aerosol is produced by the attachment of ions or atoms of the radionuclides in the radon decay series to the aerosol particles present in the chamber. In the absence of aerosol the radioactive atoms apparently become rapidly attached to the walls, and, even in the presence of aerosols, a wall effect is observed (4). Observation of the changes in filterable radioactivity with aerosol concentration thus offers a

means of estimating the capture efficiency of airborne particles for these free atoms or ions. The effect of electrical charges on the walls can be similarly studied by use of clean plastic surfaces or surfaces treated with antistatic agents or by making two opposing walls part of a condenser by installing aluminum surfaces to which a high electrical potential is applied. The effect of charged aerosol particles on capture efficiency and aersol deposition rates can also be readily studied in such a system. None of these electrical effects were investigated in this preliminary study.

This report covers the description of a suitable environmental chamber and assessment of its operational parameters, together with some measurements of the interaction of small radioactive molecules with aersols.

Instrumented Chamber

A chamber (Fig. 1), measuring internally 121 cm high, 121 cm wide and 84 cm deep, was constructed using 1/4-in. polymethylmethacrylate (Lucite) sheets for the sides, top, and bottom. The front panel was made of 1/2-in.-thick material and contained a 45-cm-diameter access opening that was covered with a 57-cm-diameter panel sealed with an O-ring. A sliding panel, containing two filter heads (Fig. 2), was mounted on the cover so that either sampling position could be aligned with a 4.3-cm-diameter sampling port having direct access to the chamber atmosphere. This arrangement permitted a rapid change of samples to be made. Another sampling port (1.4-cm diameter) directly below the panel allowed the removal of aerosol for measurement in the NRL Smoke Penetration Meter (8). Six other entry ports, as indicated in Figs. 1 and 3, were built in to allow introduction of dioctyl phthalate (D.O.P.) aerosol, radon, filtered air, and electric power, the operation of a closed-loop cleaning system, and attachment of a gage for pressure measurements. The leak rate of the chamber was established as less than 10 l/hr at a pressure differential of 2.0 cm H_2O.

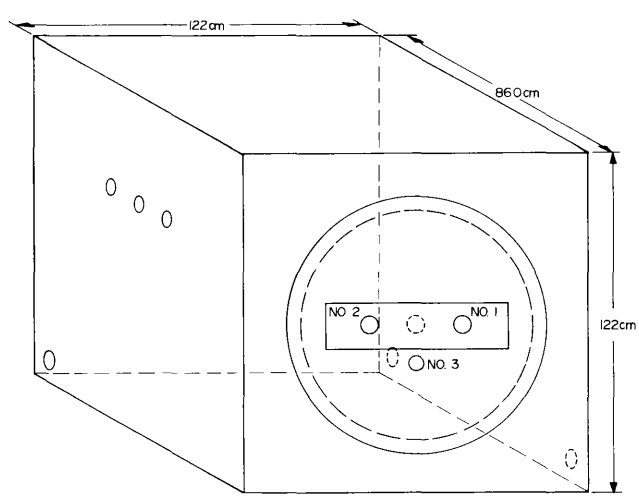

Fig. 1 - Aerosol chamber

Fig. 2 - Filter head

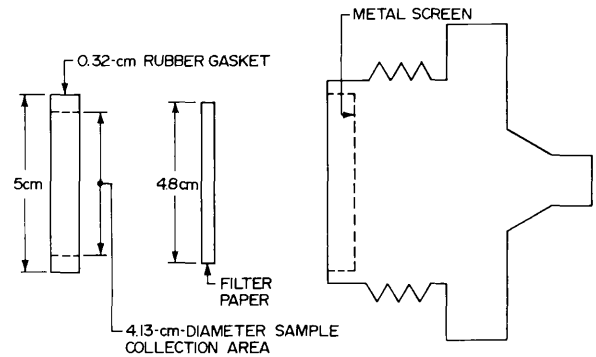

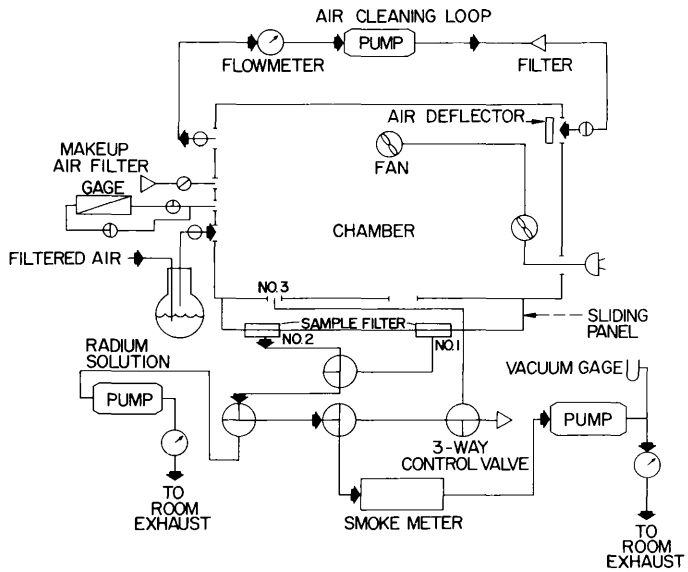

Fig. 3 - Aerosol sampling system

The design of the chamber allows the mixing, removal, and measurement of the D.O.P. aerosol, the measurement of pressure and temperature changes, and the addition of filtered air to replace that removed during the sampling procedure (Fig. 3). The mixing of the aerosol is accomplished with two electric muffin fans arranged to cause both vertical and horizontal airflow within the chamber. An "absolute" filter of Army Chemical Corps Type 6 cellulose-asbestos paper (Hollingsworth and Vose) and a blower (Roots-Connersville Type AF-24) are used to clean aerosols from the chamber in a closed-loop arrangement. Operation of this pumped loop gives a calculated reduction in aerosol concentration by a factor of 10^3 in 18 min.

The aerosol may be removed from the chamber by a combination of any sampling port and a series of three-way control valves for measurement in the NRL Smoke Penetration Meter. This arrangement permits the monitoring of changes in aerosol concentration, while sampling for radon daughters is in process, by connecting the smoke meter directly to the chamber. Also an aerosol leak through the sampling port may be detected by connecting the smoke meter to the sample line. Changes in pressure

or vacuum within the chamber are measured with an Ellison Inclined Gage. The measured pressure drop in the chamber is 2.2 cm H_2O when the sampling pump is operated at 3 l/min for a 20-min sampling period. A filter holder containing an ACC Type 6 filter paper is attached to an inlet port, allowing filtered makeup air to replace the air removed while sampling and preventing a larger pressure difference from developing between the chamber and the outside atmosphere. The effluent from the sampling pumps is vented into the room exhaust system. At a pumping rate of 3 l/min the residence time ("half-life") of air within the chamber is 280 min. The temperature is measured by thermometers placed at three elevations within the chamber.

Aerosol

Two sizes of D.O.P. aerosols have been studied: monodisperse D.O.P. with a 0.3-μm diameter and a polydisperse submicron aerosol whose overall behavior is similar to that of the 0.3-μm-diameter D.O.P.

The monodisperse 0.3-μm-diameter D.O.P. aerosol was produced in a LaMer Smoke Generator (9) by the quenching of D.O.P. vapors under controlled conditions. It was transported from the generator site to the chamber in large (200-l) polyethylene bags. The nearly invisible smoke was introduced into the chamber through a port with the muffin fans operating until the desired aerosol concentration was indicated on the smoke meter.

The polydisperse submicron smoke was produced with an NRL aerosol generator (10) in which a stream of high-pressure air is forced through a series of orifices submerged in a pool of liquid D.O.P. The visible cloud of aerosols of varied sizes (primarily 0.1- to 1.0-μm diameter) was passed through several thicknesses of IPC 1478 filter paper, which removed a substantial portion of the larger particles. On the basis of the characteristics of the smoke generator and the filter, it is felt that this aerosol has an effective size near 0.3-μm diameter.

The rate of change of aerosol concentration with time was determined by either continuous or intermittent cycling through the light-scattering meter and thence to the hood. Air withdrawn during sampling was replaced by an equivalent quantity of room air that had passed through an "absolute" filter.

Radon

A known quantity of radon was introduced into the chamber by degassing an NBS standard radium solution by the method of Harding, et al. (11). The air stream, after bubbling through the radium solution, was dried and filtered to remove entrained solution before passing into the chamber.

In the general procedure, the standardized radium solution (1.0 μCi) was added to the degassing flask (200-ml capacity) and diluted to 50 ml with distilled water. Before initial use, time was allowed for secular equilibrium to be reestablished between ^{226}Ra and its daughter ^{222}Ra (3.8-day half-life) in the sealed system. Air was introduced through a fritted-glass bubbler at the rate of 3 l/min to sweep accumulated radon into the chamber. Degassing was considered to be complete after 5 min; this was confirmed by experiments involving a second degassing of the same solution. After each use, the degassing flask containing the radium solution was sealed and set aside for regrowth of radon. It could be reused at any time by correcting for the extent of radioactive equilibrium using the factor $(1 - e^{-\lambda t})$, where λ equals 0.1812/day and t is the elapsed time in days.

The radon in the chamber served as the source of decay products which rapidly became attached to any available surfaces in the chamber and hence served as a radioactive "tag" for the aerosol particles. Actual measurements were made of the β radiation emitted by a composite of ^{214}Bi and ^{214}Pb. The radioactive decay series involved is

$$^{222}_{86}\mathrm{Rn} \xrightarrow[3.825\ \mathrm{d}]{\alpha} {}^{218}_{84}\mathrm{Po\ (RaA)} \xrightarrow[3.05\ \mathrm{min}]{\alpha} {}^{214}_{82}\mathrm{Pb\ (RaB)}$$

$$\xrightarrow[26.8\ \mathrm{min}]{\beta^-} {}^{214}_{83}\mathrm{Bi\ (RaC)} \xrightarrow[19.7\ \mathrm{min}]{\beta^-} {}^{214}_{84}\mathrm{Po\ (RaC')}$$

$$\xrightarrow[10^{-4}\ \mathrm{sec}]{\alpha} {}^{210}_{82}\mathrm{Pb\ (RaD)}\ \ (\text{22-yr half-life}).$$

Radioactivity Measurement

The effective age of the radioactive aerosol and the apparent concentrations of radon in the chamber were determined by the filtration procedures developed earlier (3, 4). Air is withdrawn at a fixed flow rate through the filter for a 20.00-min period and then counted through an 86-mg/cm^2 aluminum absorber (plus 5-mg/cm^2 window thickness) on carefully calibrated β counters (Table 1) during two subsequent 10.00-min time intervals (1 to 11 min and 61 to 71 min following termination of the collection). From the initial 10-min count and the ratio of the counts during the two time intervals, the extent of equilibrium between radon and its daughters and the apparent radon concentration can be determined. The term apparent concentration is employed since this determination is based on the assumption that all of the radon daughter products are collected by the filter; previous work (4) has shown this assumption not to be true since the chamber walls are also sites for attachment of radioactive atoms and aerosols. The difference between the apparent radon concentration and the known concentration thus serves as a measure of the relative effectiveness of the aerosol surfaces and the chamber surfaces for attachment of radioactive atoms (or ions).

After several hours, when near-secular equilibrium has been established between radon and its daughters and in the absence of an appreciable "wall" effect, it is possible to dispense with the second measurement of radioactivity (the 61- to 71-min count) and to determine radon concentrations directly from the initial 10.00-min count. The apparent radon concentration is given by

$$\mathrm{Rn(pCi/m^3)} = \frac{C_{1\text{-}11}}{C_o\ F\ E_f},$$

where $C_{1\text{-}11}$ is the total measured β count (less background) during the initial 10-min counting period, C_o is the count corresponding to the measured $C_{61\text{-}71}/C_{1\text{-}11}$ ratio (from Fig. 4), F is the sampling rate in m^3/min, and E_f is the filter retentivity (1.00 for an "absolute" filter).

Table 1
Efficiency of β Counting of ^{214}Pb and ^{214}Bi Deposited on a Glass-Fiber Filter*

Activity	β_{max} Energy (Mev)	Counter Efficiency † (%)	Relative Abundance	Counter Response (%)
RaB(^{214}Pb)	0.65	1.75	1.00	1.75
	(plus 25% low-energy-conversion electrons)			
RaC($^{214}\beta$i)	3.17	13.3	0.23	3.06
	1.65	5.75	0.77	4.43
	(Plus 5% conversion electrons of equivalent energy)			
			Total	7.49

*Counted through a 91-Mg/cm^2 total absorber (Al plus mica window).
†From counter calibration

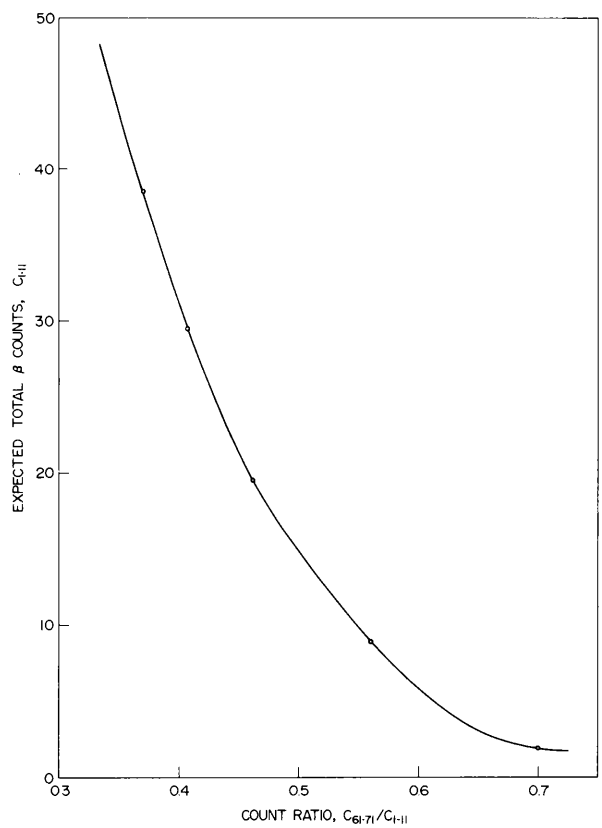

Fig. 4 - Relationship between the total counts during the initial period (C_{1-11}) and the ratio of the counting rates at C_{61-71} and C_{1-11} for a radon concentration of 1 pCi/m^3 and a filtration rate of 1 m^3/min for 20 min. The sample was counted through a 91-mg/cm^2 absorber and collected on a Gelman A glass-fiber filter.

The actual radon concentration Rn_t at any time t following addition of radon to the chamber is given by the expression

$$Rn_t = Rn_0 e^{-\lambda_r t_r} e^{-\lambda_d t} = Rn_0 e^{-(\lambda_r t_r + \lambda_d t)} ,$$

where Rn_0 is the initial radon concentration in the chamber, λ_r is the fraction of chamber air removed per minute during sampling, t_r is the total sampling time, λ_d is the decay constant for radon (1.258×10^{-4}/min), and t is the total elapsed time (min) since the introduction of radon into the chamber.

RESULTS

Aerosol Measurements

Prior to the introduction of radon into the test chamber, studies were made of the stability of the aerosol in the chamber, i.e., its rate of depletion through coagulation and deposition mechanisms. The results presented in Fig. 5 show an initial rapid decrease in aerosol concentration followed by a slower rate of loss. In the latter stage the aerosol concentration decays exponentially with time at about the same rate for both the monodisperse 0.3-μm-diameter D.O.P. aerosol and the polydisperse D.O.P. aerosol. It is presumed that loss of aerosol to the walls is the predominant mechanism during this latter stage, while initially at the higher concentrations aerosol coagulation contributes significantly to the observed decrease in smoke concentration.

The concentration of the 0.3-μm-diameter D.O.P. smoke required to give a meter reading of 100% is 80 μg/l, or 5.66×10^6 particles/cm^3; no absolute calibration is available for the polydisperse smoke used in some of the experiments. On the whole, however, its behavior was not significantly different from the monodisperse 0.3-μm-diameter smoke, and it did provide a convenient, easily generated smoke for study.

Effect of Mixing - As shown in Fig. 6, the lifetime of the 0.3-μm-diameter D.O.P. aerosol was considerably shorter when the air in the chamber was agitated by fans than when mixing was solely due to stray thermal currents within the chamber. After the initial period during which significant coagulation occurred, the half-residence time (half-life) of the aerosol was about 300 min under turbulent conditions and 500 min under still conditions. Similar values were obtained for the polydisperse aerosol (Fig. 7).

The air velocities used in these studies were insufficient to materially change the coagulation rate, but they did increase contact between the aerosol and the chamber walls, while the fan blades themselves served as an aerosol sink through direct interception of the particles. The rate of loss of aerosol under still conditions is a characteristic of the chamber (size and geometry) and must bear an inverse relation to the chamber volume. In the open air such losses could occur only at or near the ground/air interface; hence, atmospheric aerosols in this size range must have residence times under stable atmospheric conditions greatly in excess of the 8 hr observed in this study.

Effect of Radiation - The introduction of 1 μCi of radon into a chamber of this size gives a radon concentration of 8.2×10^5 pCi/m^3, 10^3 to 10^4 times that observed in the lower regions of the atmosphere. As indicated in Fig. 7, this concentration of radon has no measurable effect on the rate of loss of aerosol from the chamber. It may be concluded that the presence of radon at this concentration in subsequent experiments did not modify the behavior of the aerosol under study. It may also be surmised that radiation from the lower natural radon levels in the atmosphere does not materially affect the behavior of airborne particles in the 0.1- to 1.0-μ range.

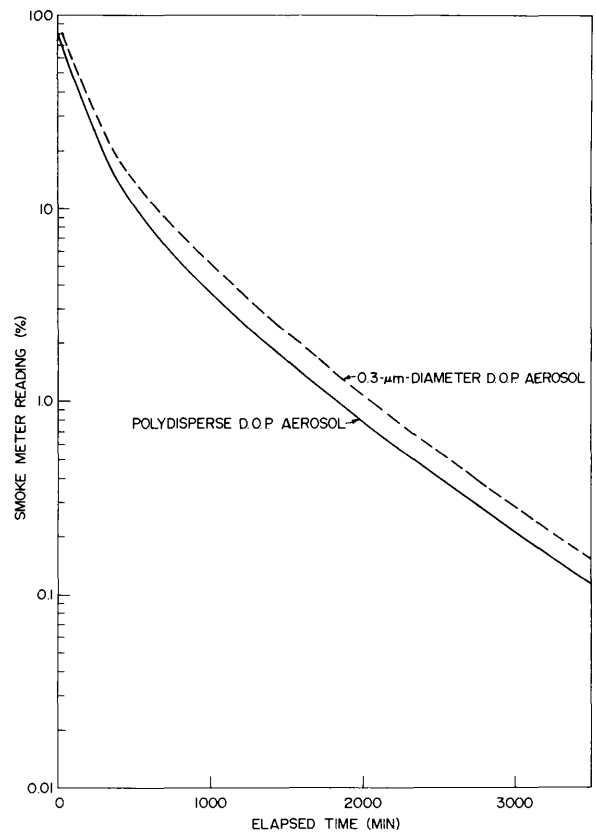

Fig. 5 - Stability of aerosol particles under still-air conditions

In these studies the number of aerosol particles was usually greatly in excess of the radioactive atoms available for attachment, except at the lowest smoke concentrations, as indicated in Table 2. A significant number of aerosol particles would contain more than one attached radioactive atom only at smoke meter readings below 0.1% ($< 5.6 \times 10^3$ particles/cm^3). Thus, the results of this study are more directly related to the radioactivity-aerosol composition of the normal atmosphere than are those of studies where extremely high radioactivity loadings have been used (12). Incidentally, Haughey's study (12) also showed no effect of radiation on coagulation rates of thoron (^{220}Rn) decay products with a submicron carbon aerosol.

Deposition in Tubes - To determine the magnitude of possible losses of aerosol particles during transport from the chamber to the light-scattering device (smoke meter), the smoke concentration was measured after passage through various lengths of 0.5-in.-I.D. rubber tubing. No differences in aerosol content were noted after passage through up to 50 ft of tubing; hence, it was assumed that losses within the shorter lengths of tubing normally used were of no significance. An experiment with radon-tagged aerosol also showed no loss in filterable radioactivity on passage through the 50-ft section of rubber tubing.

Radioactivity Measurements

A previous study at NRL (4) had suggested that there was competition between wall and aerosol surfaces for adsorption of radon decay products; this was indicated by a

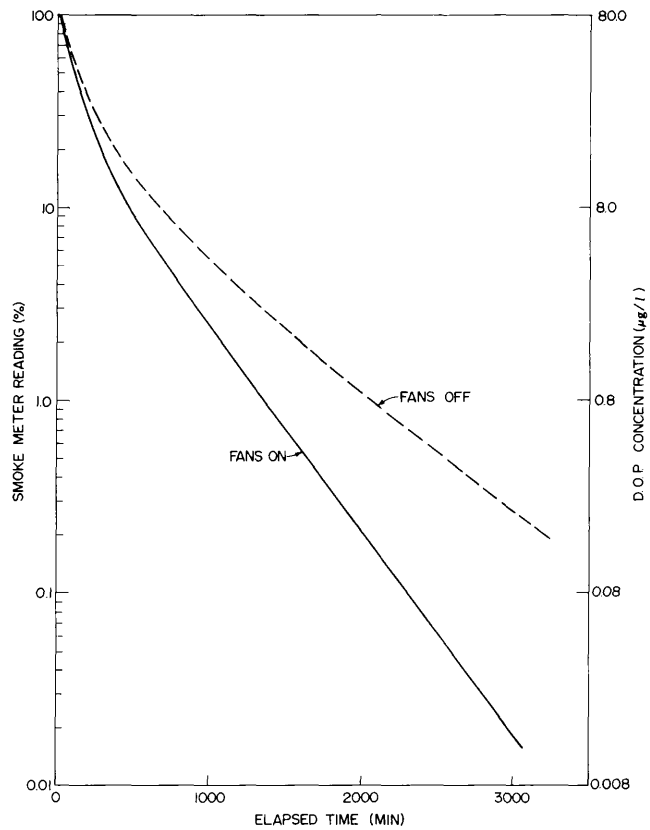

Fig. 6 - The effect of air turbulence on the stability of the 0.3-μm-diameter D. O. P. aerosol

lower-than expected ^{214}Bi to ^{214}Pb activity ratio and poor agreement between the measured and known radon concentrations in the chambers. Consequently, studies have been made of the effect of aerosol concentration on the extent of the attachment of radon daughters to D. O. P. aerosol.

In this procedure, aerosol is added to the chamber until its concentration reaches the desired value and then a known amount of radon is added with continuous mixing by fans. Smoke concentrations are measured through a sampling port, and filtration collections are made intermittently on a glass-fiber filter having 100% effectiveness for the aerosol particles at the flow rate used. The most meaningful results are obtainable after 2 hr when an essentially equilibrium condition is established between the various radioactive species present.

As shown in Figs. 5 through 7 there is a rapid change in aerosol concentration, and hence with aerosol surface area, with time. The radon concentration, however, changes more slowly and can be calculated for any time from its decay constant and its loss through sampling. Tables 3 and 4 contain the data from several series of runs on the monodisperse and polydisperse smokes of varying concentrations, together with the corresponding radioactivity data from which the fraction of attached radon decay products has been deduced. This information is displayed graphically in Figs. 8, 9, and 10. The indicated uncertainties in the values are obtained from Fig. 11, which gives the standard deviation based on counting statistics alone.

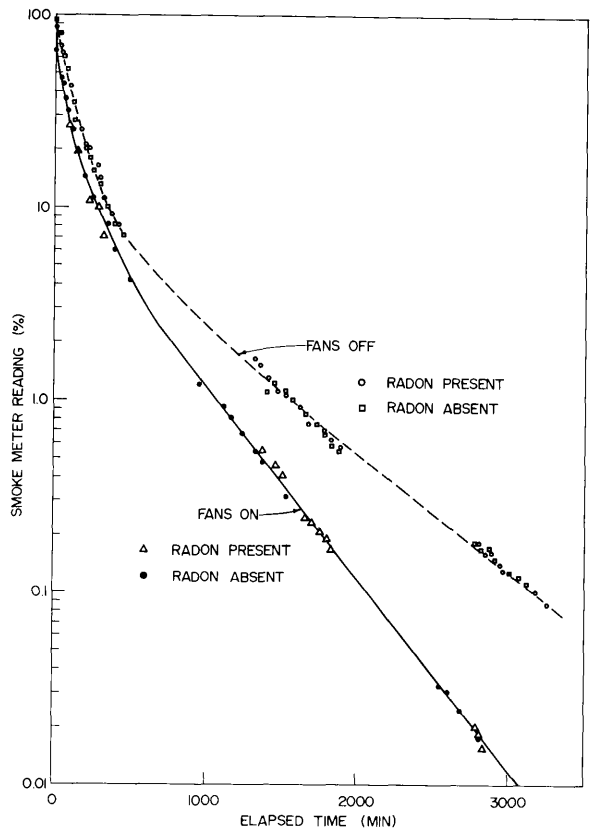

Fig. 7 - The effect of air turbulence and radioactivity on the stability of the polydisperse submicron D. O. P. aerosol

Table 2
Ratio of Aerosol Particles to Decay Products from a 1-μCi/m^3 Radon Source as a Function of Smoke Concentration

Smoke Concentration (%)	Aerosol Particles (no./m^3)	Aerosol Particles Per Radioactive Atom			
		Radon* (^{222}Rn)	RaA (^{218}Po)	RaB (^{214}Pb)	RaC (^{214}Bi)
100	5.66×10^{12}	320	580,000	66,000	89,000
10	5.66×10^{11}	32	58,000	6,600	8,900
1	5.66×10^{10}	3.2	5,800	660	890
0.1	5.66×10^{9}	0.3	580	66	89
0.01	5.66×10^{8}	0.03	58	6.6	8.9

*No measurable quantity of radon is attached to aerosol particles.

Table 3

Determination of ^{222}Rn by Measurement of the β Activity of Radon Daughters Attached to the 0.3-μm-diameter D. O. P. Aerosol (the chamber volume was 1.225 m^3 and the sampling rate was 2.88 l/min for 20 min)

Sample No.	Elapsed Time (min)*	Measured Counts		Count Ratio, C_{61-71}/C_{1-11}	Counts · 10^5		Rn Conc. (pCi/m^3 · 10^5)		Rn (Measured) / Rn (Added) (%)	Smoke Meter Reading (%)¶	Area of D. O. P. (m^2)	Area (D. O. P.) / Total Area (%)**
		C_{1-11}	C_{61-71}		Corrected†	Expected‡	Measured	Added§				
Continuous mixing by internal fans (Run 1)												
1	182	53040	21540	0.406	184	29.4	6.26	6.77	92.4 ± 2.4††	38	0.745	9.45
2	232	49810	19910	0.400	173	30.8	5.61	6.36	88.2 ± 2.3	28	0.549	8.14
3	329	45618	18202	0.399	158	30.8	5.13	6.02	85.2 ± 2.3	16	0.314	4.21
4	1313	33140	13140	0.396	115	31.8	3.62	4.98	72.7 ± 2.2	2.0	0.0392	0.546
5	1398	30964	11828	0.382	108	35.0	3.08	4.75	64.9 ± 2.0	1.2	0.0228	0.318
6	1562	25750	10040	0.390	89.4	33.2	2.69	4.42	60.9 ± 2.1	0.99	0.0194	0.271
7	1648	20590	8220	0.399	72.9	31.9	2.28	3.82	59.7 ± 2.4	0.89	0.0174	0.243
8	1723	17790	7020	0.395	61.8	32.0	1.93	3.58	53.9 ± 2.3	0.72	0.0141	0.197
9	2793	3071	1223	0.398	10.7	31.0	0.345	2.80	12.5 ± 1.5	0.036	0.0007	0.010
	2865-2875				(Fresh D. O. P. aerosol added)					14		
10	3057	13380	5130	0.383	46.5	32.7	1.42	1.82	78.0 ± 3.8	6.0	0.118	1.63
11	3137	11740	4540	0.387	40.8	33.6	1.21	1.62	74.7 ± 3.9	4.0	0.078	1.08
Continuous mixing by internal fans (Run 2)												
1	17	17020	9960	0.585	59.1	6.7	8.82	7.29	121 ± 10	43	0.843	10.6
2	48	35360	16300	0.461	122.8	19.4	6.33	7.00	90.4 ± 3.7	35	0.686	8.77
3	126	52540	20960	0.399	182.4	31.0	5.88	6.54	89.9 ± 2.3	20	0.392	5.21
4	331	42800	16780	0.392	153.7	33.0	4.66	5.55	84.0 ± 2.3	10	0.196	2.67
5	1612	21220	8100	0.382	73.7	35.2	2.09	3.67	56.9 ± 2.2	0.71	0.0139	0.194
6	2799	4240	1770	0.417	14.7	27.1	0.542	3.02	17.9 ± 1.9	0.05	0.0010	0.013
7	2835	3740	1470	0.393	13.0	32.2	0.404	2.86	14.1 ± 1.5	0.04	0.0008	0.011
8	3006	2540	975	0.384	8.82	34.7	0.254	2.62	9.69 ± 1.2	0.03	0.0006	0.008
No mixing by internal fans												
1	190	49900	19900	0.399	173	30.9	5.61	6.00	93.5 ± 2.4	35.5	0.696	8.88
2	325	47000	18500	0.394	163	32.2	5.26	5.51	95.4 ± 2.5	19.0	0.372	4.95
3	1320	39230	15300	0.390	136	33.2	4.10	4.73	87.7 ± 2.5	3.25	0.0637	0.88
4	1620	35700	14000	0.387	124	34.0	3.65	4.20	86.9 ± 2.6	1.8	0.0353	0.49
5	2750	27800	10700	0.384	96.5	34.6	2.79	3.43	81.3 ± 2.6	0.385	0.0075	0.106
6	3200	22540	8780	0.389	78.3	33.8	2.32	3.04	76.3 ± 2.8	0.21	0.0041	0.058
7	4205	16100	6200	0.386	55.9	34.4	1.63	2.61	62.5 ± 2.7	0.070	0.0014	0.019
8	4285	15090	5810	0.385	52.4	34.2	1.53	2.43	63.0 ± 2.8	0.056	0.0011	0.016

*From radon introduction to the midpoint of sample collection.
†Corrected to a flow of 1 m^3/min and 100% filter retention.
‡Expected of 1 pCi $^{222}Rn/m^3$ (see Fig. 4).
§Corrected for decay and removal during sampling.
¶100% represents 6.93×10^{12} particles of the 0.3-μm-diameter D. O. P. (1.96-m^2 total area).
**Area of D. O. P. plus the area of the interior surfaces of the chamber (7.136 m^2).
††Standard deviation.

Table 4

Determination of ^{222}Rn by the Measurement of β Activity of Radon Daughters Attached to a Polydisperse, Submicron D.O.P. Aerosol (The chamber volume was 1.225 m^3 and the sampling rate was 2.88 l/min for 20 min)

Sample No.	Elapsed Time (min)*	Measured Counts		Count Ratio, C_{61-71}/C_{1-11}	Counts · 10^5		Rn Conc. ($pCi/m^3 \cdot 10^5$)		Rn (Measured) / Rn (Added) (%)	Smoke Meter Reading (%)
		C_{1-11}	C_{61-71}		Corrected†	Expected‡	Measured	Added§		
No mixing by internal fans (Run 1)										
1	3273	27900	11060	0.396	96.8	31.8	3.04	3.38	89.9 ± 3.0**	14.5
2	6100	15060	5900	0.392	46.1	32.7	1.41	1.97	71.5 ± 3.2	0.15
10068-10078 (Fresh D. O. P. aerosol added)										68
3	10243	8364	3262	0.390	29.0	33.3	0.87	0.97	91.6 ± 5.9	32
4	10328	7744	3098	0.400	25.1	30.9	0.81	0.91	89.0 ± 5.9	17
5	11493	5974	2304	0.385	20.7	34.5	0.60	0.74	81.1 ± 6.2	2.22
No mixing by internal fans (Run 2)										
1	220	54203	21903	0.404	188	29.9	6.29	6.80	93.5 ± 2.4	29.5
2	315	48703	19676	0.404	169	29.9	5.65	6.43	89.9 ± 2.4	20.5
3	1385	40303	15703	0.390	140	33.4	4.19	5.29	79.2 ± 2.2	1.8
4	1695	36320	14020	0.386	126	34.4	3.66	4.59	79.7 ± 2.3	1.05
5	2830	28940	11060	0.382	100	35.4	2.82	3.83	74.6 ± 2.4	0.215
6	2985	25340	9780	0.386	88.0	34.4	2.56	3.70	69.2 ± 2.3	0.165
7	4225	14980	5900	0.393	52.0	32.2	1.61	2.70	59.6 ± 2.7	0.033
8	4260	13935	5455	0.391	44.95	31.0	1.45	2.58	58.2 ± 2.8	0.029
4275-4310 (Cleaning loop in operation) (35 min)										
9	4445	2279	1247	0.547	7.91	9.70	0.816	2.16	37.8 ± 8.3	0.000
10	4510	2312	1320	0.571	8.03	7.90	1.02	1.99	51.2 ± 11.8	0.000
11	4561	2079	1171	0.563	7.22	8.40	0.86	1.89	45.5 ± 10.9	0.000
12	4620	2600	1308	0.504	9.12	14.2	0.642	1.78	36.1 ± 6.6	0.000
13	4665	2615	1285	0.492	9.07	15.4	0.589	1.69	34.9 ± 6.3	0.000
14	8585	1184	668	0.564	4.11	8.40	0.489	0.982	49.7 ± 17.0	0.000
9970-9980 (Fresh D. O. P. aerosol added)										
15	10110	4696	1856	0.395	16.3	32.0	0.509	0.563	90.4 ± 8.0	21
16	10170	4596	1756	0.382	16.0	35.0	0.457	0.528	86.6 ± 8.0	15
17	11449	3696	1416	0.383	12.8	35.1	0.365	0.430	84.9 ± 8.3	2
18	11858	3260	1300	0.380	11.3	35.8	0.315	0.390	80.8 ± 8.5	1.1
19	14380	1780	676	0.380	6.18	35.8	0.173	0.277	62.4 ± 9.7	0.062
Continuous Mixing by Internal Fans (Run 1)										
1	18	18340	10100	0.551	63.7	9.6	6.64	7.31	90.9 ± 6.5**	55
2	47	32260	15160	0.470	112	18.2	6.15	7.27	84.6 ± 3.4	50
3	140	45900	20000	0.436	159	23.9	6.65	7.17	92.7 ± 2.7	42
4	228	44500	18400	0.413	154	28.0	5.50	6.58	83.6 ± 2.3	20.5
5	260	42024	17124	0.407	146	29.2	5.00	6.35	78.7 ± 2.2	15
6	315	40700	16700	0.410	141	28.6	4.93	5.92	83.3 ± 2.4	10
7	1325	31390	12050	0.384	109	34.8	3.13	4.97	63.0 ± 2.0	1.7
8	1390	24710	9590	0.388	85.8	34.0	2.52	4.70	53.6 ± 1.9	1.2
9	1520	20040	7960	0.397	69.6	31.4	2.22	4.39	50.6 ± 2.1	0.85
10	1630	17080	6810	0.399	59.3	30.9	1.92	4.06	47.3 ± 2.1	0.59
11	1715	14100	5540	0.393	49.0	32.4	1.53	3.90	39.2 ± 1.9	0.45
12	2745	2840	1100	0.387	9.86	34.0	0.299	3.26	9.17 ± 1.1	0.039
13	2835	2109	812	0.385	7.32	34.4	0.213	2.99	7.12 ± 1.0	0.027
14	3000	1540	593	0.385	5.35	34.4	0.155	2.83	5.48 ± 1.0	0.018
15	3100	1180	454	0.385	4.10	34.4	0.119	2.64	4.51 ± 0.9	0.0125
16	3125	1030	397	0.385	3.57	34.4	0.104	2.50	4.16 ± 0.9	0.010
17	3183	852	328	0.385	2.96	34.4	0.086	2.34	3.67 ± 1.0	0.006
Continuous Mixing by Internal Fans (Run 2)										
1	368	50400	20300	0.402	167	30.2	5.53	7.55	73.2 ± 1.9	8.5
2	1816	16380	6500	0.397	51.7	31.7	1.63	5.54	29.4 ± 1.3	0.18
3	2830	2398	952	0.397	7.56	31.7	0.238	4.85	5.8 ± 0.8	0.017

*From Rn introduction to the midpoint of sample collection.
† Corrected to a flow of 1 m^3/min and 100% filter retention.
‡ Expected for 1 pCi $^{222}Rn/m^3$ (see Fig. 4).
§ Corrected for decay and removal during sampling.
**Standard deviation.

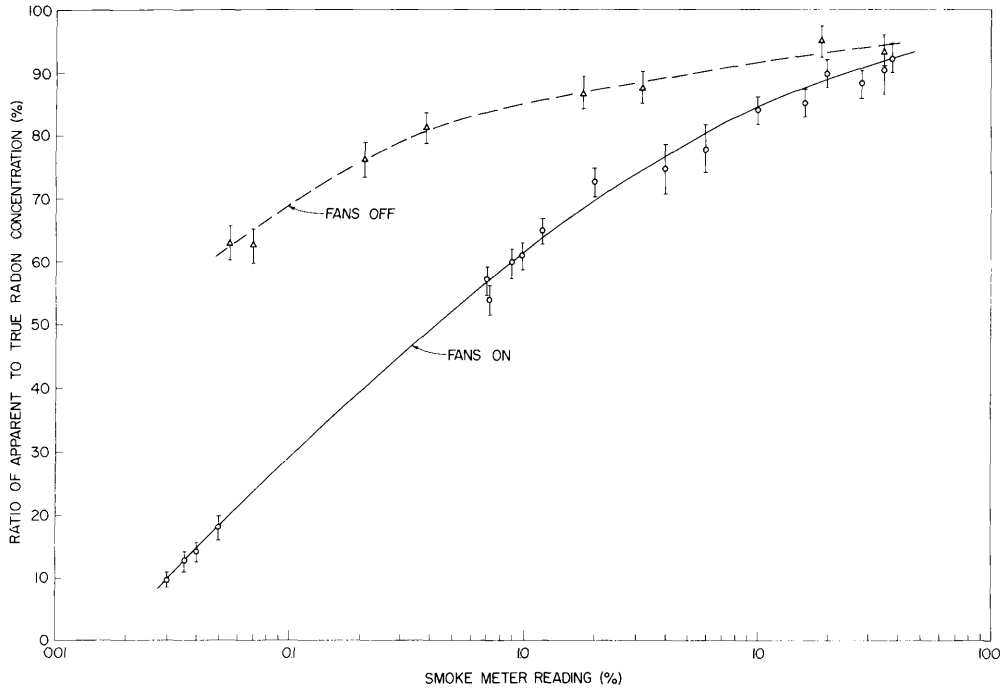

Fig. 8 - Effect of aerosol concentration on the attachment of radon daughter products to the 0.3-μm-diameter D. O. P. aerosol

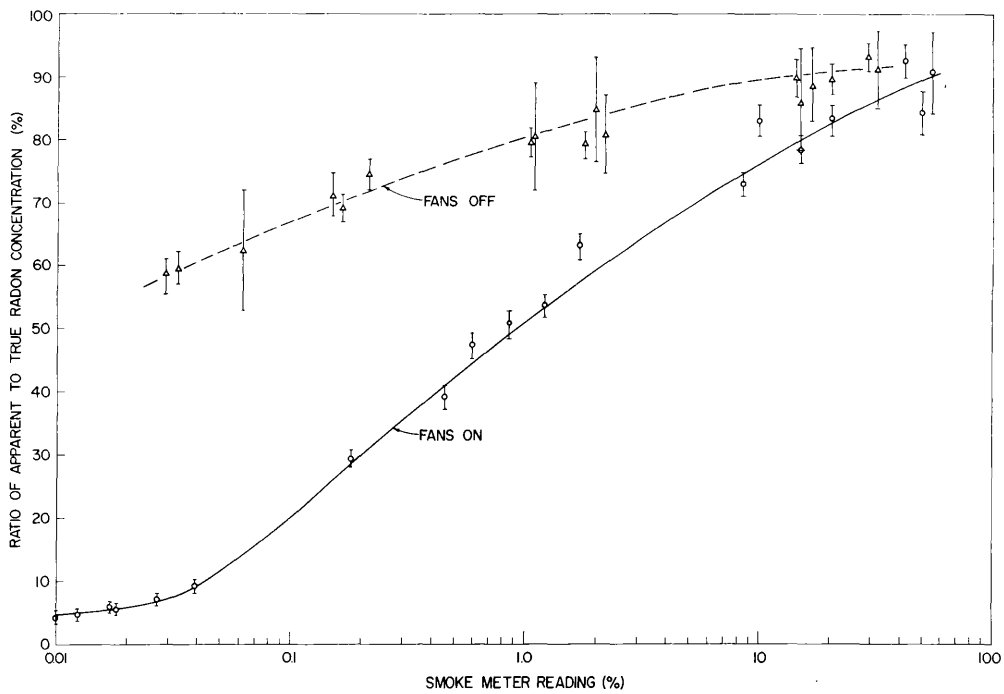

Fig. 9 - Effect of aerosol concentration on the attachment of radon daughter products to a polydisperse D. O. P. aerosol

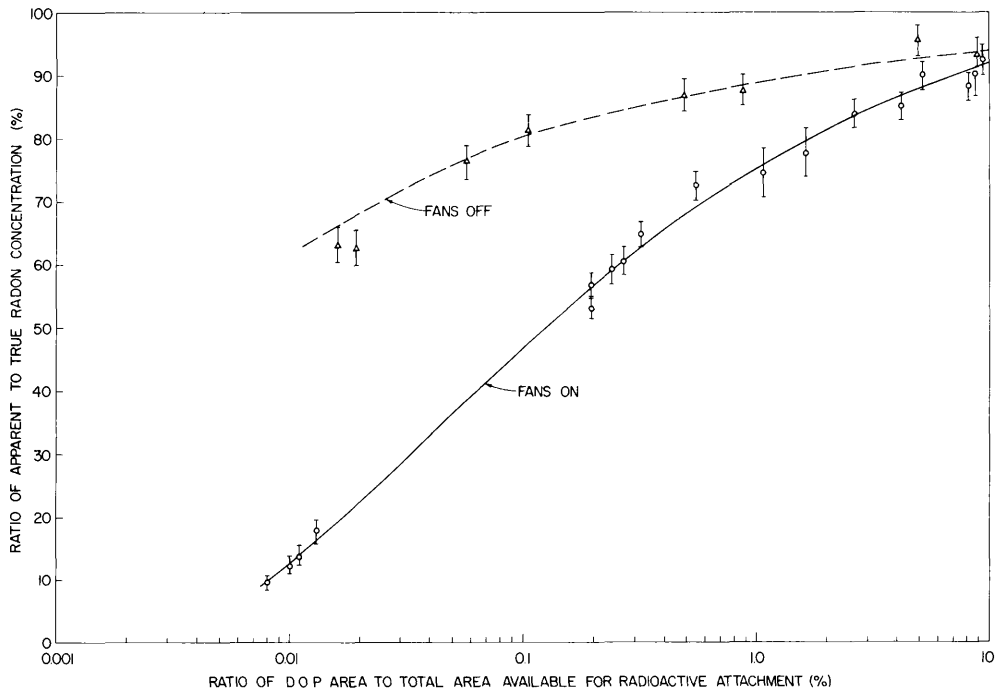

Fig. 10 - Effects of aerosol surface area and turbulence on the attachment of radon decay products to the 0.3-μm-diameter D. O. P. aerosol

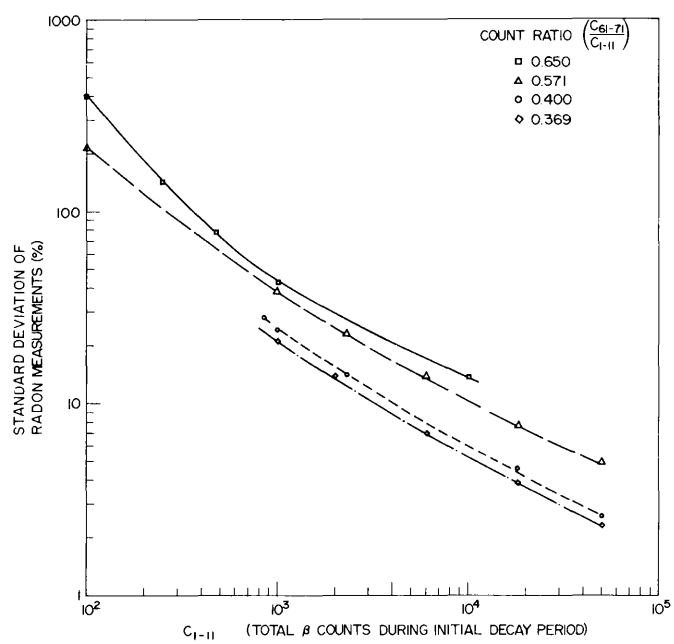

Fig. 11 - Statistical error of the radon concentration as determined from the initial count under different equilibrium conditions

As seen in Figs. 8 and 9, both with and without turbulence, the fraction of radon decay products attached to the aerosol particles decreases as the aerosol concentration falls. However, the decrease is much more dramatic when mixing is going on, due to enhancement of leakage of the ions or simple molecules of the radon decay products to the walls.

In Fig. 10, the data from Fig. 8 have been replotted using as the abscissa the ratio of aerosol surface area to total area (aerosol plus chamber walls). From this curve it is possible to obtain some indication as to the behavior of radon decay products in the open atmosphere. Assuming an effective size of 0.3 μm for the atmospheric aerosol and a concentration of 6×10^3 particles/cm^3 (near the actual value) and considering that a 1-m^3 cell of air at the earth's surface has only 1 m^2 of surface area (rather than the 6 m^2 of our chamber), the aerosol surface to total available surface would be about 0.16%. From Fig. 10, this would correspond to about 80 to 85% attachment of radon decay products to the aerosol under calm conditions and 50 to 55% under extremely turbulent conditions. Considering that a more reasonable sampling cell would include the lowest 10 m of the atmosphere, the area ratio would increase to about 1.6%. Under these conditions attachment would approach 80% and 90% for turbulent and quiet conditions, respectively. These values are not out of line with experiments conducted at field sites which have indicated that the collection and analysis of filterable radon decay products gives a reasonable representation of atmospheric radon concentrations (4, 13).

Radioactivity collections made at "zero" aerosol concentration (less than 0.01% of the lowest measurable concentration, or $<<$ 1 particle/cm^3) show that with stirring only a small fraction of the radon decay products remain airborne but that under still-air conditions in the neighborhood of 50% of the radon can be accounted for by the radioactivity of its airborne daughter products. This leads to the conclusions that these atomic-sized particles are filterable and also that their average lifetime in this chamber under still-air conditions is rather short. Deposition of radioactivity on the walls was confirmed, but the accuracy of measurement was low due to the small surface area available for counting.

Further information on the diffusion of the decay products to the walls is given by the counting ratio of the second (C_{61-71}) to the first counting period (C_{1-11}). As predicted by theory and confirmed in Tables 3 and 5, the count ratio decreases as secular equilibrium between radon and its daughters proceeds, approaching 0.368 as a limiting value (on our equipment) after 2 hr. Values as low as 0.380 are actually obtained; the small difference could be due to calibration errors or diffusion of unattached radon daughters to the walls. This latter is suggested as a possibility, since in the absence of aerosol (Table 5) the count ratio is much higher, in the range of 0.49 to 0.77, suggestive of a very young radon conglomerate. This is the direction any diffusion-produced error would take, since loss of decay products further down the decay chain would cause a surplus of their predecessors and an apparent lowering of the age of the decay product mixture.

Effect of Wall Losses on Measured Atom Ratios of RaC to RaB (ρ values)

Consider the series

$$^{222}Rn \rightarrow RaA(^{218}Po) \rightarrow RaB(^{214}Pb) \rightarrow RaC(^{214}Bi),$$

where at secular equilibrium the activities A_x of each of the species are equal. If losses to the wall occur, they may be corrected for by the application of appropriate factors t each of the decay products, so that

Table 5

Determination of ^{222}Rn by Measurement of Radon Daughters Collected on an Absolute Filter in the Absence of Aerosol

Sample No.	Elapsed Time (min)*	Measured Counts		Count Ratio, C_{61-71}/C_{1-11}	Counts × 10^5		Rn Conc. (pCi/m^3 × 10^5)		Rn (Measured) / Rn (Added) (%)	Smoke Meter Reading (%)	Fans
		C_{1-11}	C_{61-71}		Corrected†	Expected‡	Measured	Added§			
	0-5				(Radon added) (June 24, 1968)						
1	169	383	295	0.770	1.208	1.00	1.208	6.27	19.3 ± 18.1	0	On
2	1150	4345	2405	0.554	13.71	9.10	1.509	5.37	28.1 ± 4.5	0	Off
3	1265	6017	3497	0.583	19.0	6.60	2.88	4.73	60.9 ± 8.5	0	Off
4.	1415	317	193	0.610	1.00	4.80	0.208	4.42	4.70 ± 5.20	0	On
5	1481	303	183	0.604	1.05	5.20	0.202	4.18	4.83 ± 5.80	0	On
6	1550	258	178	0.690	0.814	2.10	0.388	3.92	9.90 ± 13.9	0	On
7	2610	2448	1668	0.575	7.72	7.30	1.058	3.21	33.0 ± 7.6	0	Off
	2730-2735				(Polydisperse D.O.P. aerosol added)						
8	3031	20734	8094	0.390	65.4	33.2	1.97	2.45	80.4 ± 3.2	13.0	Off
	4060-4150 (D.O.P. removed)										
9	4289	1262	814	0.645	3.98	3.2	1.24	2.00	62.0 ± 26.0	0	Off
10	4351	1465	837	0.571	4.62	7.8	0.592	1.88	31.5 ± 10.0	0	Off
11	4411	1461	857	0.586	4.61	6.8	0.678	1.76	38.5 ± 12.3	0	Cff
12	5680	1133	717	0.633	3.57	3.8	0.939	1.23	76.3 ± 30.5	0	Off
13	5705	2009	1149	0.572	2.79	7.6	0.367	1.08	34.0 ± 8.5	0	Off
	0-5 (Radon added to chamber, after chamber flushed with 20 volumes of room air and filtered for 35 min) (July 8, 1968)										
14	199	480	312	0.650	1.53	3.2	0.478	7.23	6.61 ± 5.1	0	On
15	285	400	300	0.750	1.28	1.5	0.853	6.48	13.1 ± 11.8	0	On
16	320	311	175	0.563	0.994	8.4	0.118	6.06	1.95 ± 1.76	0	On
17	415	351	259	0.738	1.12	1.4	0.800	5.45	14.7 ± 15.2	0	On
18	1455	4661	2661	0.571	14.9	7.7	1.94	4.32	44.9 ± 7.2	0	Off
19	1535	760	380	0.500	2.43	14.5	0.167	4.09	4.08 ± 1.88	0	On
20	1558	563	263	0.467	1.80	18.5	0.097	3.84	2.53 ± 1.47	0	On
21	1639	256	160	0.625	0.818	4.1	0.199	3.61	5.51 ± 7.71	0	On
22	2872	295	143	0.485	0.942	16.3	0.058	2.50	2.32 ± 1.36	0	On
	2900-2905				(Polydisperse D.O.P. aerosol added)						
23	3110	14940	6220	0.416	47.7	27.6	1.73	1.97	88.7 ± 4.3	14.8	Off
24	3164	14811	6011	0.406	47.3	29.6	1.60	1.85	86.5 ± 4.1	10.2	Off
	(Chamber flushed with 25 m^3 of air and filtered for 30 min)										
25	3300	2	10	-	-	-	0	-	-	0	On

*From radon introduction to the midpoint of sample collection.

† Corrected to a flow of 1 m^3/min and 100% filter retention.

‡ Expected for 1 pCi $^{222}Rn/m^3$ (see Fig. 4).

§ Corrected for decay and removal during sampling.

**Standard deviation.

$$A_{Rn} = A'_{RaA}(1 + a_1) = A'_{RaB}(1 + a_1)(1 + a_2) = A'_{RaC}(1 + a_1)(1 + a_2)(1 + a_3),$$

where the A' symbols refer to the airborne radioactivity associated with each species at secular equilibrium. Then,

$$\rho = \frac{N_{RaC}}{N_{RaB}} = \frac{A'_{RaC}\,\lambda_B(1 + a_1)(1 + a_2)(1 + a_3)}{A'_{RaB}\,\lambda_C(1 + a_1)(1 + a_2)},$$

where N_{RaC} and N_{RaB} are the number of atoms of RaC and RaB at secular equilibrium in the absence of wall losses and λ_C and λ_B are the respective decay constants. Thus,

$$\rho = \frac{A'_{RaC}\,\lambda_B}{A'_{RaB}\,\lambda_C}(1 + a_3) = \rho_{exp}(1 + a_3),$$

where ρ_{exp} is the value obtained from the actual measurement of the decay rate of the filterable radon decay products.

Since ρ equals 0.735 at secular equilibrium (i.e., after an elapsed time of 2 hr),

$$\rho_{exp} = \frac{0.735}{1 + a_3}$$

or

$$a_3 = \frac{0.735 - \rho_{exp}}{\rho_{exp}}.$$

The correction factor a can be related to the half-life of the depositing species through the following line of reasoning:

$$\text{Loss by decay} = L_d = N(0.693/t_{1/2})$$

and

$$\text{Loss to walls} = L_w = N(0.693/\alpha_{1/2}),$$

where N is the total number of radioactive atoms and $t_{1/2}$ and $\alpha_{1/2}$ are the decay and deposition constants, respectively. The total loss of radioactive atoms is

$$L_d + L_w$$

or

$$L_d + L_w = L_d(1 + a),$$

where a is the correction factor for wall losses. Solving,

$$a = \frac{L_w}{L_d} = \frac{N(0.693/\alpha_{1/2})}{N(0.693/t_{1/2})} = \frac{t_{1/2}}{\alpha_{1/2}}.$$

Thus, where $t_{1/2} = 19.7$ min (for RaC) and $a = a_3$,

$$\frac{19.7}{\alpha_{1/2}} = \frac{0.735 - \rho_{exp}}{\rho_{exp}}$$

or

$$\alpha_{1/2} = \frac{19.7\ \rho_{exp}}{0.735 - \rho_{exp}}.$$

Values for the measured ratios of counts at C_{61-71} to C_{1-11} and the corresponding ρ and $\alpha_{1/2}$ values are listed in Table 6. From the count ratios obtained in the absence of mixing and with no aerosol present, $\alpha_{1/2}$, the deposition half-time, is found to lie in the range of 7 to 14 min for the experimental conditions described. The measured differences can very plausibly be ascribed to differences in convective mixing caused by variations and air movements introduced during sampling in the thermal environment outside the chamber. When active mixing is taking place, $\alpha_{1/2}$ is considerably smaller.

Table 6
Evaluation of the Diffusion Constant for the Chamber from Measured Count Ratios

Count Ratio, $\frac{C_{61-71}}{C_{1-11}}$	Atom Ratio, ρ_{exp}	Diffusion Constant, $\alpha_{1/2}$(min)
0.368	0.735	∞
0.377	0.700	394.
0.400	0.600	88.
0.425	0.500	42.
0.456	0.400	24.
0.500	0.300	13.6
0.553	0.200	7.4
0.627	0.100	3.1
0.730	0.035	1.0

The actual quantity of radioactivity collected on the filter in the absence of aerosol is a small fraction of that obtained when considerable aerosol is present. As a result the statistical errors in counting are large. These errors are magnified when the count ratios are converted into apparent radon concentrations, since the counts expected for a given count ratio are more sensitive to changes in the ratio with increasing departure from the equilibrium condition (Fig. 4).

Filter Retentivity Measurements

Fibrous filter media depend on several mechanisms for collecting particulate matter from a moving air stream - direct interception of a particle by a fiber mat, inertial impaction of a particle on a fiber following its failure to follow the stream of air deflected by a fiber, and the diffusion of particles through the air to a fiber. There are also electrostatic effects which are not being considered at this time. The interception and inertial processes are more effective with larger and more dense particles, and effectiveness generally increases with increasing air velocity, while diffusion is inversely related to the particle mass and the air velocity. On this basis the primary atoms or simple oxides produced in the decay of radon should be collected by a diffusion mechanism, and the collection efficiency should increase with residence time near a fiber, i. e., with decreasing air velocity. On the other hand, the collection efficiency for radioactive atoms that had become attached to aerosol particles would be expected to correspond to that of the aerosol during filtration.

A few preliminary experiments have been run which indicate that this hypothesis is correct. Table 7 shows the retention of IPC 1478 (a loose filter of cellulosic fibers), Type 5G (cellulose-glass fiber) and Gelman A (100% glass fiber) filter papers for the polydisperse D. O. P. aerosol and radon decay products both in aerosol-free air and attached to the D. O. P. test aerosols. The low-efficiency IPC filter has a retentivity near 20% for the D. O. P. aerosols as determined by direct aerosol measurement and the radioactivity of the collected aerosol. In the latter case a backup, high-efficiency filter was used to determine the fraction of the total radioactivity passing through the test filter (7). In the absence of aerosol the IPC paper showed a considerably enhanced collection efficiency (over 60%), which suggests that collection of the unattached radon daughters is governed by a diffusion mechanism. The collection of radioactivity by Type 5G in the absence of aerosol is much higher (90%), in keeping with its smaller interfiber distance. By coincidence, the polydisperse D. O. P. was collected with approximately the same efficiency as the atomic-sized particles. On the other hand, the high-efficiency glass-fiber filter collected both the aerosol and the atomic-sized particles with near 100% efficiency.

Further studies are currently underway to measure the effect of air velocity on the collection of these atomic-sized particles. (The low concentration of these particles precludes the possibility of any substantial number of them undergoing dimerization or coalescing into particles containing more than one radioactive atom.)

CONCLUSIONS

The extent of attachment of radon decay products to aerosols in a chamber of finite size has been shown to be directly related to the aerosol concentration, with a high degree of attachment (> 90%) occurring at high aerosol concentrations. Turbulence within the chamber increases the loss both of radon decay products and of aerosol particles to the walls. In view of the rather high aerosol concentrations existing in the lower atmosphere and the limited surfaces for competitive absorption, most of the radon decay products will become attached to filterable aerosols. It has been demonstrated, however, that in an isolated parcel of clean air short-lived radioactive atoms can live out their lifetime in a free condition.

The attachment of radon decay products (and, by inference, free atoms or compounds of nongaseous material) can be accounted for by a diffusion mechanism, though it is possible that electrostatic effects may also contribute to the process. Since these unattached ions, atoms, or simple molecules can be readily collected by fibrous filters, studies of filter effectiveness for these materials as a function of air velocity should

reveal details of the filtration mechanism and, in particular, give some insight as to the interfiber distances in an operating filter. The use of radioactivity to tag aerosol particles permits the determination of filter retentivities for particles too small to be evaluated by the usual light-scattering techniques and with the high sensitivity characteristic of radioactivity measurements. Exploration of the interaction of these small radioactive particles with their environment is continuing.

Table 7
Determination of the Retentivity of Some Air Filters

Filter	Type	Air Velocity (cm/sec)	D. O. P. Smoke Meter Reading (%)	D. O. P. Size	Filter Retention (%)
IPC 1478	Cellulose	2.51	0.16	polydisperse	18.8*
		2.51	0.70	polydisperse	20.0*
		2.51	63.0	polydisperse	19.1*
		3.77	16.0	0.3 μm	18.5 ± 0.1†
		3.77	5.0	polydisperse	18.9 ± 0.2†
		3.77	0.000	(none)	69.3 ± 1.3†
Type 5G	Cellulose-glass fiber	2.51	25	polydisperse	88.0*
		2.51	37	polydisperse	91.9*
		2.51	60	polydisperse	89.0*
		3.77	0.000	(none)	90.0 ± 0.9†
Gelman A	Glass fiber	2.51	63	polydisperse	100.000*
		2.51	85	polydisperse	99.998*
		2.51	87	polydisperse	99.997*
		3.77	0.000	(none)	99.5 ± 0.5†

* Retentivity based on smoke readings before and after passage through filter.
† Standard deviation of radioactivity measurements based on counting statistics.

REFERENCES

1. Wilkening, M. H., "Natural Radioactivity as a Tracer in the Sorting of Aerosols According to Mobility," Rev. Sci. Instr. 23:13 (1952)

2. Vohra, K. G., Subbaramu, M. C., and Mohan Rao, A. M., "A Study of the Mechanism of Formation of Radon Daughter Aerosols," Tellus 18:672-8 (1966)

3. Lockhart, L. B., Jr., Patterson, R. L., Jr., and Hosler, C. R., "Determination of Radon Concentration in the Air Through Measurement of Its Solid Decay Products," NRL Report 6229, Mar. 1965

4. Lockhart, L. B., Jr., and Patterson, R. L., Jr., "The Extent of Radioactive Equilibrium Between Radon and Its Short-Lived Daughter Products in the Atmosphere," NRL Report 6374, Apr. 1966

5. Lockhart, L. B., Jr., and Patterson, R. L., Jr., "Filter Pack Technique for Classifying Radioactive Aerosols by Particle Size, Part 1 - Preliminary Report and Evaluation," NRL Report 5970, Aug. 1963

6. Lockhart, L. B., Jr., Patterson, R. L., Jr., and Saunders, A. W., Jr., "Filter Pack Technique for Classifying Radioactive Aerosols by Particle Size, Part 5 - Final Report," NRL Report 6520, Mar. 1967

7. Lockhart, L. B., Jr., Patterson, R. L., Jr., and Anderson, W. L., "Characteristics of Air Filter Media Used for Monitoring Airborne Radioactivity," NRL Report 6054, Mar. 1964

8. Knudson, H. W., and White, L., "Development of Smoke Penetration Meters," NRL Report P-2642, Sept. 1945

9. Sinclair, D., and La Mer, V. K., "Light Scattering as a Measure of Particle Size in Aerosols; the Production of Monodisperse Aerosols," Chem. Rev. 44:245-67 (1949)

10. Echols, W. H., and Young, J. A., "Studies of Portable Air-Operated Aerosol Generators," NRL Report 5929, July 1963

11. Harding, J. E., Schwebel, A., and Stockman, L. L., "Report on Determination of a Small Amount of Radium in Solution," J. Assoc. Off. Agr. Chemists 41:311-15 (1958)

12. Haughey, F. J., "Interactions of Rn^{220} and Its Daughter Products with a Carbon Aerosol," Ph. D. Dissertation, Rutgers—The State University, 1966; University Microfilms, Inc., Ann Arbor:University Microfilms, microfilm 67-5264

13. Hosler, C. R., "Meteorological Effects on Atmospheric Concentrations of Radon (Rn^{222}), RaB(Pb^{214}), and RaC(Bi^{214}) near the Ground," Monthly Weather Rev. 94:89-99 (1966)

This page intentionally left blank.

Security Classification

DOCUMENT CONTROL DATA - R & D

(Security classification of title, body of abstract and indexing annotation must be entered when the overall report is classified)

1. ORIGINATING ACTIVITY (Corporate author) Naval Research Laboratory Washington, D.C. 20390	2a. REPORT SECURITY CLASSIFICATION Unclassified 2b. GROUP

3. REPORT TITLE

THE INTERACTION OF RADON DECAY PRODUCTS WITH AEROSOLS

4. DESCRIPTIVE NOTES (Type of report and inclusive dates)

Interim report; work is continuing.

5. AUTHOR(S) (First name, middle initial, last name)

A. W. Saunders, Jr., R. L. Patterson, Jr., and L. B. Lockhart, Jr.

6. REPORT DATE December 31, 1968	7a. TOTAL NO. OF PAGES 26	7b. NO. OF REFS 13

8a. CONTRACT OR GRANT NO. NRL Problem C06-06 b. PROJECT NO. RR 001-05-42-4851 c. d.	9a. ORIGINATOR'S REPORT NUMBER(S) NRL Report 6802 9b. OTHER REPORT NO(S) (Any other numbers that may be assigned this report)

10. DISTRIBUTION STATEMENT

This document has been approved for public release and sale; its distribution is unlimited.

11. SUPPLEMENTARY NOTES	12. SPONSORING MILITARY ACTIVITY Department of the Navy (Office of Naval Research), Washington, D.C. 20360

13. ABSTRACT

An instrumented plastic chamber with a 1.2-m^3 capacity has been constructed and used to study the stability of some submicron dioctyl phthalate (D.O.P.) aerosols and their interaction with the short-lived radioactive decay products of radon (^{222}Rn). The degree of attachment of the radon decay products to the D.O.P. aerosols in this chamber has been shown to be a function of the relative areas of the aerosol and wall surfaces. At high aerosol concentrations (10^5 particles/cm^3), 90% or more of the short-lived decay products are attached to aerosol particles. At lower aerosol concentrations and particularly when convection increases the availability of the walls for deposition, the airborne radioactivity is much less.

Under the proper conditions appreciable quantities of unattached radon descendants will remain airborne. A few preliminary studies with these "free" atoms or simple molecules have shown that they are effectively retained by fibrous filters. They thus provide a useful tool for evaluating the retentivity of filter media toward extremely small particles and for studying the mechanism of particle capture through diffusive processes.

DD FORM 1 NOV 65 1473 (PAGE 1)

S/N 0101-807-6801

Security Classification

Security Classification

14. KEY WORDS	LINK A ROLE	LINK A WT	LINK B ROLE	LINK B WT	LINK C ROLE	LINK C WT
Aerosols						
Radioactivity						
Radon						
Air pollution						
Atmosphere						
RaB						
RaC						

DD FORM 1 NOV 65 1473 (BACK)
(PAGE 2)

Security Classification