NRL Report 6775

Nondestructive Testing for Void Content in Glass-Filament-Wound Composites

B. E. Walker, Jr., C. T. Ewing, and R. R. Miller

Inorganic and Nuclear Chemistry Branch
Chemistry Division

October 4, 1968

NAVAL RESEARCH LABORATORY
Washington, D.C.

This document has been approved for public release and sale; its distribution is unlimited.

CONTENTS

Abstract	ii
Problem Status	ii
Authorization	ii
INTRODUCTION	1
GENERAL TECHNICAL BACKGROUND	1
SURVEY OF POSSIBLE NDT METHODS	2
FURTHER CONSIDERATIONS OF THE SELECTED NDT METHODS	3
Microwaves	3
Infrared Transmission	4
Laser Studies	5
Density Measurements	5
Corona Discharge	8
CONCLUSIONS	11
ACKNOWLEDGMENTS	13
REFERENCES	13

ABSTRACT

Precise nondestructive methods for void determinations on glass-filament-wound composites in the form of NOL rings and ring segments were tested for feasibility, with particular emphasis on the 0- to 3-vol-% void region. Strength of a composite has been shown to strongly depend on the void content of the sample. Therefore, the importance of void detection becomes apparent, since it can predict the mechanical properties to be expected. Experimental data related to void content are presented for several possibilities - infrared transmission, backscatter from laser transmission, density measurements, and corona discharge inception. The merits and problems associated with these methods are discussed, and the feasibility of each as a nondestructive test method for void determinations on NOL rings is demonstrated in comparison with destructive void results.

PROBLEM STATUS

This is a final report on the nondestructive test phase of the problem; work is continuing on other phases.

AUTHORIZATION

NRL Problem C05-24
Project RR 001-01-43

Manuscript submitted July 19, 1968.

NONDESTRUCTIVE TESTING FOR VOID CONTENT IN GLASS-FILAMENT-WOUND COMPOSITES

INTRODUCTION

The purpose of this investigation was to study the feasibility of nondestructive test (NDT) methods for precise determination of microvoids in glass-filament-wound composites, particularly in the 0- to 3-vol-% range. The composite model used in the NRL studies is a widely accepted industry standard, NOL-type glass-filament-wound rings, 6 in. in diameter, 1/4 in. wide, and 1/8 in. thick. The resin system of the samples is Epoxy 826/methyl nadic anhydride (85 parts per hundred parts of resin)/benzyl dimethylamine (1 part per hundred parts of resin), and the curing schedule is 2 hr at 110°C, 2 hr at 140°C, and 2 hr at 175°C. The glass-filament reinforcement of the samples is Owens-Corning Fiberglas S-994 HTS coded SCG150/1/101 x 801-994.

Control of the void content in composites is important, because it is one of the prime factors that determines the strength and fatigue life of these materials. At present, even destructive techniques for void content are limited. The gravimetric method for determination of void content of glass composites is restricted by two major uncertainties in the required data: (a) the density of glass is known only to ±0.8% and (b) foreign material not removed by ignition is included in the glass-content weight determination. The effect of these errors on the gravimetric equation is obvious:

$$\mathrm{VPV} = 100\left[1 - \left(\frac{w_g}{d_g} - \frac{w_r}{d_r}\right)d_c\right], \tag{1}$$

where

VPV = volume-percent void (will be used throughout report),

w_g = weight fraction glass,

d_g = density of glass,

w_r = weight fraction resin,

d_r = density of resin,

and

d_c = density of composite.

Modal analysis, as used by petrographers and metallographers for estimating volume constituents of rocks and metals, applied to thin specimens of sample rings, appears to be the best method for the destructive determination of VPV in glass composites, particularly in the 0 to 3 VPV range (1). Although this method is also somewhat restricted, it does appear to have sufficient merit for use as a comparison base for NDT methods.

GENERAL TECHNICAL BACKGROUND

Fabrication of glass-filament-wound composites has reached the stage where large voids have been virtually eliminated by in-process quality control. Microvoids, however,

are inherent in the winding process and result from entrapment or diffusion of air into interstitial spaces between filaments due to poor wetting and capillary penetration of the filament bundle by the resin. It has been well established that microvoids are detrimental to interlaminar shear and compression strength of glass composites (1-5), and recent data indicate that the fatigue life is also influenced by microvoids (4,6). Consequently, the determination of void content, particularly in the low-void-content range, is an important consideration and can provide, through correlation, an indication of the mechanical properties that can be expected from a composite.

Since the only presently available methods for void-content measurements are destructive, strength, fatigue, and other mechanical tests must be performed on one set of NOL rings, and void-content data must be obtained from another set that is assumed to be similar. Consequently this study was initiated to find a NDT method for precise determination of void content in glass-filament-wound NOL rings. An accuracy of ±0.2 VPV was desired initially over the range 0 to 3 VPV, but this was later modified to ±0.5 VPV.

SURVEY OF POSSIBLE NDT METHODS

Measurement of thermal conductivity was one of the methods considered for void-content determinations. The most applicable of several available thermal conductivity techniques would probably be Powell's thermal comparator method (7,8). This method employs a simple device which measures the transfer of heat to or from small metal spheres in contact with the sample surface. Voids would cause variations in the thermal conductivity of the composite, and these changes could be related to the VPV. Unfortunately, variations in the glass and resin content of the composites can also produce significant thermal conductivity changes. The thermal conductivity of glass-filament-wound plastics is quite low (approximately 1×10^{-4} g-cal./sec-cm^2-°C-cm, which is close to most commercial thermal-insulating materials), and thermal conductivity measurements on low conductors cannot be made with great precision, an accuracy of ±3% in this range being considered excellent. Loeb (9) has shown on porous materials that changes in thermal conductivity are directly proportional to the VPV. The sensitivity of the measurements on such a low thermal conductor would therefore require impossible accuracy, and this method was not considered further.

Another NDT method that has been used in some instances for void detection in glass-filament-wound structures involves transmission and detection of infrared radiation (10-12). The sample structure or inner section of a sample is heated or filled with a heated liquid, and an infrared detector is employed outside. Since this method also depends primarily on thermal conduction, it is subject to the same limitations as the previous method and thus was not examined further in this study.

Measurement of velocity or attenuation of ultrasonic energy through composites has proved to be a useful method for detecting massive voids (12-16). The sensitivity and resolution, however, appear to be inadequate for determinations of low concentrations of microvoids (14).

Beta-ray backscattering techniques were used at the Aerojet-General Corporation on Polaris glass-filament-wound missile cases (17). The method appears to be quite sensitive to changes in glass-to-resin ratios, however. In fact, it is often used to obtain this ratio (17). With this sensitivity to glass and resin changes, the method does not appear suitable for precise void determinations.

Another method that has proved useful in locating voids in glass-filament-wound structures is corona discharge (17-19). This method involves subjecting the sample to

an intense electric field to ionize the air in the voids and detecting the resulting corona. Since this method is relatively independent of the dielectric medium (unless grossly changed), it seemed advisable to take a closer look at this technique.

Use of microwave equipment has also proved valuable in NDT processes for location of voids in glass composites (11,17,19-24). The method is readily adaptable to NDT processes, since a microwave generator, transmitter, and suitable pickup are the only requirements. The measurements can be made rather quickly and easily; consequently a closer look at this method seemed mandatory. Although the microwave, corona discharge, and beta-ray methods have been used in the detection and location of voids, no evidence is available that they have been checked for feasibility in microvoid and void-content determinations.

Another method was suggested by the fact that if microwaves were feasible in void determinations, transmissions involving even shorter wavelengths might also be promising. Therefore, infrared, visible, and ultraviolet transmission or absorbance seemed to rate a closer investigation.

The possible application of lasers to NDT was suggested by Zurbrick (12), who also pointed out that very little had been done in this general area. Consequently, at least a rough appraisal of this method seemed necessary.

Although it is not considered a NDT process, density measurements on samples may provide suitable data for correlation with void content if the variations in the glass/resin ratios are not too great. Although density measurements may not be as easily obtained on massive structures as they are on NOL rings and segments, there are several promising NDT methods of obtaining density, such as ultrasonic techniques and gamma radiation gages (12). If accurate enough, correlation of these results with density and subsequent relation to void content may be possible. Consequently, it seemed advisable to obtain density data and see if they would relate accurately enough to void content.

FURTHER CONSIDERATIONS OF THE SELECTED NDT METHODS

Microwaves

The main advantages of the microwave method are the ease of obtaining measurements and the ready adaptability of the method to NDT processes. The measurements involve either noting the changes in the dielectric constant of the test material due to voids or observing the changes in a standing wave pattern brought about by microwave reflections or scattering from microvoids.

The precise determination of void contents in fiber-glass composites by noting changes in the dielectric constant with microwaves appeared questionable at the outset. Dielectric constant measurements of high accuracy are difficult, and since the measurement would strongly depend on both the glass/resin ratio of the composites and the void content, the results would be limited in precision. Besides the lack of resolution, there is no available evidence that there is a useful relationship between void content and dielectric constant.

Microwave scattering measurements also appear doubtful in application to microvoid detection in glass composites. Interpretation of small changes due to scattering in a standing wave pattern would be very difficult, because there would also be scattering from the sample surfaces, which would be difficult to control. It is also apparently necessary for scattering measurements to use microwave radiation of a wavelength approaching the size of voids expected (24,25). This would make void detection in the present study

extremely difficult, since the largest microvoids observed in NOL rings were less than 0.01 cm in diameter, and the microwave spectrum generally encompasses wavelengths of 10 cm to 0.1 cm.

Although the microwave method appears to have good practical application for obtaining the thickness of materials and detection of massive voids, it does not appear to have sufficient resolution for sensing microvoids in the 0 to 3 VPV range of glass composites. Since microwaves are apparently too long for sensing microvoids, it seemed logical to investigate the use of shorter wavelength regions, such as infrared.

Infrared Transmission

A number of glass-filament-wound composite NOL ring segments were studied in the infrared, ultraviolet, and visible regions. However, significant transmission could be obtained only in the infrared region. One of the advantages of this method is that some insight is possible concerning the glass/resin ratio as well as the void content. The main disadvantages of the method are that the instrumentation is not readily adaptable to NDT processes, and glass transmission, unfortunately, ceases at approximately 2-1/2μ, thus confining the transmission studies to a band of about 1μ.

A Perkin-Elmer Model 350 spectrophotometer was used for the infrared transmission studies. Since normal transmission through even the lowest void composites was about 15%, the instrument was operated on single-beam transmission with the slits set at 0.361 mm to effectively increase the transmitted energy. This permitted determination on both high-void and low-void samples.

With the instrument set as described, the infrared region around 1.78μ was found to be a convenient portion of the spectrum for all sample composites, ranging from 0 to 6 VPV. The composition parameters of the composite samples were predetermined, and those samples studied by this method mainly contained either 84 or 75 wt-% glass. Figure 1 is a plot of transmission at 1.78μ vs VPV (determined by the petrographic or point count method). On the low-void-content portion of the curve, the transmission apparently differs according to the glass content of the composites as well as the void content, but for the high-void samples, scattering due to voids appears to be the predominant mechanism and the curves tend to coincide.

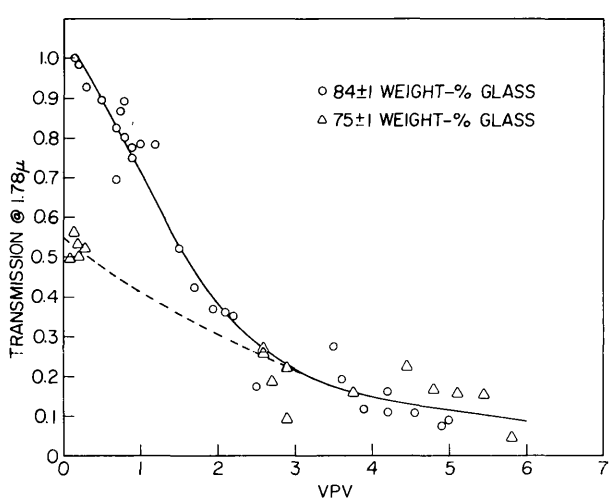

Fig. 1 - Average transmission at 1.78μ vs VPV, as determined by petrographic, or point count, method

Although there is some scatter, most of the transmission results on samples of the same or nearly the same glass/resin ratio fall within ±1/2 VPV of the drawn curves. The average deviation of the data in the 0 to 3 VPV range is approximately half this figure. The transmission data for each point represents at least two, and in most cases three, determinations on a particular NOL ring. The void-content data are an average of at least three, and in some cases up to 15, separate determinations on a single ring. The observed resolution of the method appears to be quite satisfactory, since real variations up to 3 VPV have been noted in the same ring, and the average is about 1.2 VPV.

Another feature of the transmission results is that the weight-percent glass can be estimated from the absorbance difference between two transmission maxima (2.15 μ and 1.96 μ). The following equation was generally found to predict glass content, regardless of void content, to ±2%:

$$\Delta A \; V_g = \text{constant} = 38.5, \tag{2}$$

where

ΔA = absorbance difference from 2.15 to 1.96 μ

and

V_g = vol-% glass.

From the glass content and the VPV, the volume-percent of resin and the glass/resin ratio in the samples can be calculated. Consequently, the infrared spectroscopy method appears to have considerable merit for determining composition as well as voids in glass composites. Measurements of the resonant frequency of the NOL rings used in this study were found to correlate to approximately ±1% with the weight-percent of glass in the composites (26), but its application to composites of different configurations may be limited.

Laser Studies

The use of lasers as a NDT tool for void determination in glass composites was a cooperative effort between the Chemistry and Plasma Physics Divisions of NRL. Since absorption by the epoxy resin and the presence of the voids reduced the transmitted intensity of the low output lasers employed (10 mw He-Ne and Zr arc), both forward and backscattering signals were very strong and diffused and could be easily picked up by a phototube. Although some general degree of differences in photocurrent could be observed between low- and high-void-content samples, resolution was poor, as indicated in Fig. 2. For the composite samples containing approximately 84 wt-% glass a rough trend is discernible, but for the 75 wt-% glass samples photocurrent is nearly a constant value from 0 to 6 VPV. From the obvious differences in backscatter intensity between the 84 and 75 wt-% glass samples, it would appear that the amount of glass and resin in the samples also has a considerable effect on the data.

Since the two effects apparently could not be separated in the present studies, the method was not investigated further. However, the ease of measurement and the ready adaptability of the method to NDT processes do suggest that further work with lasers might prove fruitful.

Density Measurements

Density determinations have been made on a number of glass-ring composites, and Fig. 3 demonstrates that density vs void content for samples with nearly the same glass

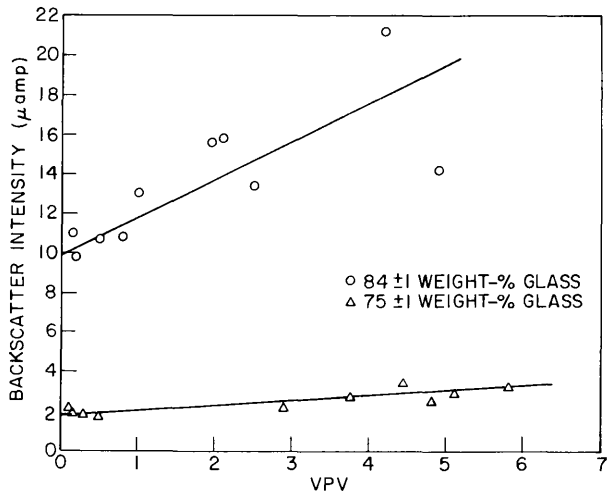

Fig. 2 - Backscatter in microamperes from Zr arc laser vs VPV

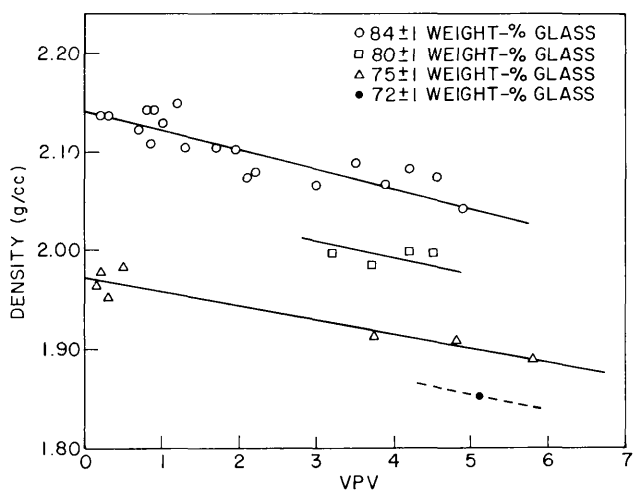

Fig. 3 - Density vs VPV, as determined by point count, or petrographic, method

content correlates satisfactorily. Most density results are within ±0.6 VPV of the line drawn. It should also be pointed out that even though each density result represents the average of two to six small segments (approximately 5/8 in.) of a standard NOL ring, it cannot be expected to be as accurate as a measurement on the entire ring, since it has been observed that variations in void content up to 3 VPV can exist throughout the same ring. However, the agreement between the average VPV as determined by the petrographic, or point count, method and the VPV as determined gravimetrically (Table 1) is good. The mean deviation over the 0 to 3 VPV range is less than ±0.4 VPV. Although the density of the glass fibers apparently may vary from 2.48 to 2.52 g/cc, it appears that the effect of the variation is roughly the same from one sample ring to another. This is somewhat understandable as each ring contains several miles of glass filament; consequently each

Table 1
Comparison of Petrographic, or Point Count, VPV Results with Those Based on Density Measurements and Gravimetric Formula (Eq. 1)

Sample Designation	VPV by Point Count	VPV from Density and Eq. 1	VPV Deviation, Point count - Eq. 1
JR-2-1	0.15	0.8	-0.65
JR-4	0.2	0.9	-0.7
NRL-25	0.2	1.2	-1.0
JR-8	0.3	0.6	-0.3
JR-1	0.5	0.65	-0.15
NRL-27	0.7	0.7	0.0
NRL-24	0.8	1.0	-0.2
NRL-44	1.0	0.6	+0.4
NRL-23	1.2	1.2	0.0
NRL-14	1.3	2.4	-1.1
NRL-28	1.7	1.5	+0.2
NRL-31	1.95	1.5	+0.45
NRL-15	2.1	2.1	0.0
NRL-49	2.5	1.5	+1.0
LW-4-1	3.75	4.2	-0.45
NRL-11	3.9	3.1	+0.8
NRL-8	4.2	2.6	+1.6
NRL-13	4.2	4.1	+0.1
LW-3-4	4.8	2.6	+2.2
NRL-9	4.9	4.3	+0.6
LW-5-8	5.1	4.5	+0.6
LW-8-8	5.8	4.25	+1.55
Mean			±0.6

ring would tend to contain glass filaments with nearly the same average density. Also the foreign material not removed by ignition is apparently either negligible or approximately the same for each sample ring.

As applied to NOL rings or segments, density measurements are relatively easy, and this is their main advantage, but extrapolation to larger composite structures will present problems, as the density determination only provides an all-inclusive void result. Examination of various sections of a composite by this method is not possible unless the NDT methods for density determinations mentioned previously can provide both scanning ability and precise results.

Resonant frequency was found to correlate as a straight-line function with the weight-percent of glass in the ring composites with an average deviation of less than ±1% (6). Where resonant frequency data and density data are available on the same composites, it is possible to estimate the weight-percent of glass from the resonant frequency data and then determine the void content with the standard gravimetric formula (Eq. 1). Comparison of the void contents for several composites calculated by this method with the void contents measured by the petrographic technique are given in Table 2. The mean deviation of ±0.8 VPV compares favorably with the deviation of ±0.6 noted for the difference between void contents determined by the point count method and Eq. 1 (Table 1).

Table 2
Comparison of VPV Determined Nondestructively from Density and Resonant Frequency Data, and Density and Absorbance Data (Eq. 2) Versus VPV Observed by Petrographic Method

Sample Ring	Observed VPV	VPV Calculated from Resonant Frequency and Density	VPV Deviation Observed-Calculated	VPV Calculated from Eq. 2 and Density	VPV Deviation Observed-Calculated
JR-4	0.2	0.2	0.0	0.0	+0.2
JR-8	0.3	0.8	-0.5	0.0	+0.3
NRL-26	0.85	1.6	-0.75	-	-
NRL-28	1.7	1.7	0.0	0.0	+1.7
NRL-31	1.95	1.9	+0.05	0.0	+1.95
NRL-29	2.2	2.9	-0.7	-	-
NRL-49	2.5	1.5	+1.0	3.1	-0.6
LW-4-1	3.75	4.7	-0.95	7.7	-3.95
LW-3-4	4.8	2.6	+2.2	4.5	+0.3
NRL-30	5.0	5.1	-0.1	-	-
LW-5-8	5.1	3.3	+1.8	1.5	+3.6
LW-8-8	5.8	4.5	+1.3	-	-
Mean			±0.8		±1.6

For the samples used in these tests, the average density of glass from several destructive tests was found to be 2.50 g/cc, and the resin density was determined from cast resin rings and found to be 1.22 g/cc. These values were used in the computations.

VPV data computed from Eq. 2, which requires both infrared transmission and density measurements, are also shown in Table 2. Since this equation gives glass-content data to only ±2%, rather than ±1%, it is not surprising that the mean deviation between observed and calculated VPV values is double that found when using resonant frequency and density.

Consequently, in application to NOL rings, density measurements, not necessarily alone but in combination with other data, can provide fairly reliable void-content determinations despite the fact that the glass density may vary from 2.48 to 2.52 g/cc.

Corona Discharge

As applied to NDT of fiber-glass composites, the corona discharge method involves subjecting the samples to a high intensity electric field (60cps) to ionize the gas in the voids and then detecting the resulting corona disturbance by visually displaying the electric signals produced. This is done by coupling an indicating voltmeter or a cathode-ray oscilloscope to the detector circuit.

The advantages of this method include less dependency on the glass/resin ratio, since the technique depends primarily on ionization of air in the voids and the size and distribution of the voids. The method has been used in less precise void determinations on glass-filament-wound composite motor and missile cases (17,19). Corona studies made on electrical insulation with artificially produced voids suggest that the method can work for microvoids, and it was found in these investigations that the depth of the void in the matrix was the prime factor and not the area of the void (27).

Figure 4 is a simplified block diagram of the AC corona test equipment used in the present investigation. When corona occurs in a test specimen, its terminal capacitance increases momentarily by a small amount for each individual corona discharge; this causes the voltage at the sample terminals to drop by a proportionate amount. This volage drop is reflected throughout the circuit and shows up as a deflection on the cathode-ray oscilloscope. The calibration signal coupler is used to predetermine the amount of this deflection, and in this apparatus the deflection has been determined to be approximately 0.3 picocoulomb/0.1 in. on the most sensitive scale of the scope.

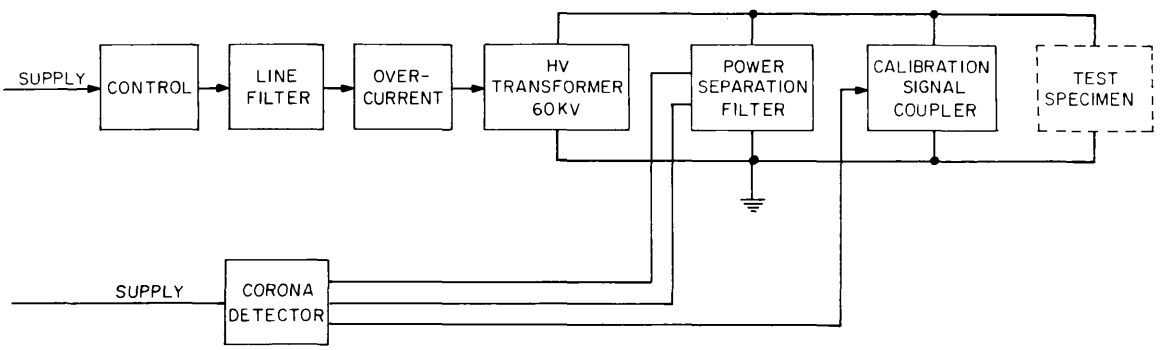

Fig. 4 - AC corona discharge test system

Application of the corona discharge system for NDT on NOL ring segments involved solution of several problems. Coupling of the specimens to the electrode was determined experimentally. One-eighth-inch-diameter flat stainless-steel electrodes, with the edges rounded off, applied with a constant torque of 5 in.-lb, were found to be acceptable. Initial corona tests were conducted in transformer oil (transil), but this medium proved unsatisfactory. Consequently, a search had to be made for a suitable liquid with a high dielectric strength for operation over the desired corona discharge range (60 kv). Results of this study are shown in Table 3. The tests were made without additional purification of the fluids and with the nonstandard electrodes described above. The results, therefore, are not comparable to those obtained by ASTM methods. Monoisopropyl biphenyl (MIPB) was the liquid finally selected, because it had the least background corona at 30 to 60 kv operation.

Initial measurements of inception voltages showed considerable scatter. After it had been determined that time was a factor in the occurrence of corona discharges, a uniform set of operating procedures was established, and consistent results were obtained. A balanced charge buildup on the test sample also caused troubles. The fact that this buildup occurred only after corona discharge had been attained tended to eliminate the MIPB as being responsible. This was further substantiated by tests run in a nonpolar liquid (CCl_4), in which the same charge buildup in the samples was observed. The charge disappears after several hours but can be maintained for longer periods by storing the test specimen in a dry atmosphere.

Two possibilities have been suggested as to why the charge buildup occurs. One is that the test sample with its voids closely resembles series-connected electrical condensers, which can build up a charge in a high-intensity electric field. The other possibility is that the action of the high-intensity electric discharge of the corona system behaves similar to a vac-ion pump, and ionized air molecules may be driven from the

Table 3
Dielectric Strength Tests on Various Liquids Using 1/4 in. Gap, Stainless-Steel Electrodes

Liquid	Experimental Breakdown Voltage (kv)
Transformer oil (transil)	24
MIPB (monoisopropyl biphenyl)	>60
Silicone "510" - 100	44
Silicone "510" - 50	53
Epon 826 resin	53
Pyranol 1470 (pentachloro biphenyl and trichlorobenzene mixture)	52
Arachlor 1248 (tetrachloro biphenyl)	>60
FS 1265 (fluoro-silicone fluid)	45
Polyphenyl (m-bis-phenoxy benzene)	>60

void walls into the sample matrix, with subsequent slow electron neutralization. At any rate, careful operation with minimum time at the inception voltage can avoid a major part of the charge buildup. When the charge buildup does occur, it dissipates fairly rapidly, and no harm is apparent to the test specimens.

When measurements of the inception voltage (when voltage is being raised) are repeated for the same sample with the electrodes repositioned in approximately the same positions, the average deviation in the inception voltages was determined to be ±1.2 kv. The average deviation in extinction voltages (when voltage is being lowered) is approximately twice this value, but the charge buildup discussed above is a factor here. The average deviations in inception voltages for individual test ring segments is ±2.9 kv, but it will be shown later that this may be well within the limits of VPV variation that can occur in the samples.

Figure 5 is a plot of the average inception voltages versus the average VPV of test rings (determined by the petrographic method). Each data point represents an average of at least six corona measurements and approximately the same number of void measurements, determined as closely as possible on the same areas included in the corona studies. Although the results are somewhat scattered, it should be recognized that the average VPV data may be inadequate in expressing the true void content of the rings. (This limitation extends to all results.) Differences up to 3 VPV and nonuniformity of void distribution have been observed in short segments (1/4 to 1 in.) of the same test ring by petrographic analysis, density measurements, and analysis of interlaminar shear data, which correlates with VPV (1). It was generally observed that when samples showed a lack of uniformity in the void distribution and some large-size voids were evident, there was a corresponding wide range in the inception voltage values. As expected, average inception voltages for samples with high voids and nonuniform void distribution, as evidenced by petrographic analysis, show the greatest deviation from the curve in Fig. 5.

For samples in the 0 to 2-1/2 VPV range, the method appears very promising, and the average deviation from the curve in terms of VPV is less than ±0.4. Void size and

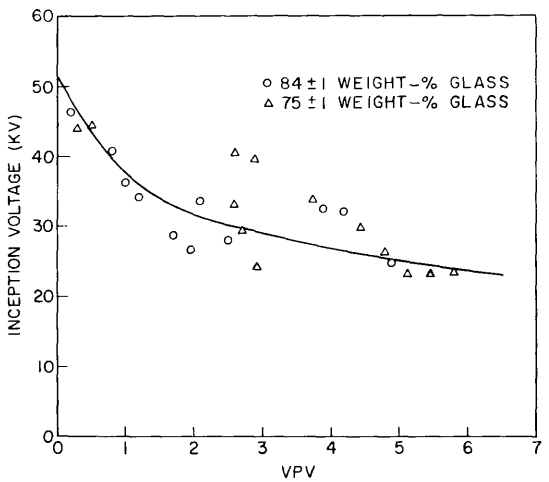

Fig. 5 - Average corona inception voltage (kilovolts) vs VPV, as determined by point count, or petrographic, method

distribution in this range are generally more uniform, and this uniformity probably accounts for the better resolution of the data in this region.

A further advantage of the method is that several items of information may be gained from the corona studies besides correlation of VPV with inception and/or extinction voltage. Theory predicts that the size of the voids should be related to the pulse amplitude of the corona, this correlation has been found to be generally true in the present studies. The number of voids should be related to the pulse rate; this relationship also has been observed. Determinations of the size and number of voids, however, are refinements of the corona method. Photographing the corona signals on the oscilloscope will be necessary to get more detailed information on the size of voids, and a high-speed electronic counter (to overcome the background) will be necessary for further studies on the number of voids.

The principal disadvantage of the corona method is that the upper limit of application is regulated by the breakdown voltage of the glass composite, which was found experimentally to be from 47 to 52 kv for a thickness of 1/8 in. This agrees favorably with the 50-kv breakdown voltage predicted by Starr's experiments (28). Thus, a limit of detection to approximately 0.2 VPV is necessary to avoid possible sample destruction. A lesser problem, but one which was encountered in a few instances, involved destruction of the sample due to the presence of massive voids which substantially reduce the breakdown voltage. This is supported by studies on electrical insulation by Gooding and Slade (29), who observed that electrical breakdown of an insulator occurred at a much lower voltage for one large void than an equal void volume consisting of many small voids. The charge buildup during measurements, discussed previously, is also undesirable, because it delays the corona measurements, though no harm to the sample is apparent.

CONCLUSIONS

The approach to various NDT methods for precise void determination in glass-filament-wound composites in this investigation was made with only slight consideration for ultimate application to larger shapes and structures. It was realized that the approach used could produce methods that were applicable to NOL-type rings but would not be

adaptable to other geometries. However, since no NDT methods for precise void determination existed for any configuration, it seemed important to first concentrate on developing a suitable method.

It appears that infrared transmission, corona discharge, and density methods all have some merit. The corona discharge and the infrared transmission methods indicate great promise in the 0 to 3 VPV range. The density method seems to have approximately uniform precision regardless of void content. Further destructive test data, in conjunction with more complete NDT determinations, will be necessary for a full evaluation of each method. The data from the laser studies were inconclusive, and use of lasers should probably be investigated more thoroughly.

The corona discharge method is mainly limited by the breakdown voltage of the composite samples. The infrared method depends on the glass/resin ratio and is also subject to discolorations in the samples, which can occur as a result of using different resin additives, curing agents, curing times, and curing temperatures. The density method also depends on the glass/resin ratio and can be influenced by the variation in the density of glass fibers.

While not considered as a prime target, adaptation to larger composites of all of the methods discussed in the previous paragraphs is within the realm of possibility but not without problems. For example, if one were to consider examining 1-in.-thick glass composite motor cases for void content, the corona discharge method would involve use of 300 to 400 kv corona test systems. The sample structure would have to be immersed in a nonreactive liquid medium of high dielectric strength (19) or the corona test electrodes so constructed that they would be encased in a high dielectric medium (17). Such a test system is both cumbersome and somewhat dangerous, and exposing the sample to transformer oil or other liquid is not desirable. Despite these difficulties, the corona method could be adapted, and such systems have been used in massive void detection.

For a NDT infrared transmission method to work on the assumed 1-in.-thick glass-composite sample, adaptation again would be cumbersome and would require light sources of great intensity. Intense lamp sources are available, however, and the mechanics of adaptation are within the scope of possibility. The use of density measurements on such a structure is also possible but not too practical with present techniques. If ultrasonic studies and/or gamma radiation gages eventually provide accurate density data and these methods can be easily adapted to NDT processes, density determinations could become the simplest detector for void determinations.

One feature of the work presented in this report is that all tests were made on finished glass-wound products, whereas it is obvious that in-process quality controls could eliminate the need for elaborate NDT processes later. The present investigation did not include this facet of quality control; in most instances the methods studied would be impractical as in-process controls. Lasers, however, might well be used to the best advantage here, as these measurements can be made rather easily and displayed on a recorder, thus providing a continuous record of the winding process. The need for NDT after winding will still be present, as the curing process can produce changes that will show only in the finished composite.

The problem of measuring void content to ±0.5 VPV in the 0 to 3 VPV region has been demonstrated as being feasible on NOL rings. It is felt, however, that further NDT work on glass composites should be undertaken on a larger and more comprehensive basis to relate these or other methods to the various geometries and compositions that require analysis.

ACKNOWLEDGMENTS

The assistance and counsel of Messrs. J.B. Romans, R.C. Clark, A.G. Sands, J.M. McMahon, and Miss D.S. Cain, all of NRL, are gratefully acknowledged.

REFERENCES

1. Sands, A.G., Clark, R.C., and Kohn, E.J., "Microvoids in Glass-Filament-Wound Structures: Their Measurement, Minimization, and Correlation with Interlaminar Shear Strength," NRL Report 6498, Mar. 31, 1967

2. Fried, N., Kaminetsky, J., and Silvergleit, M., "Development of Filament Wound Plastics with Enhanced Compressive Properties Through Use of Improved Resin Systems," Proceedings, 22nd Annual Technical Conference, SPI Reinforced Plastics Division, Section 20-B, Jan. 31, Feb. 1-3, 1967

3. Fried, N., "The Response of Orthogonal Filament Wound Materials to Compressive Stress," Proceedings, 20th Annual Technical Conference, SPI Reinforced Plastics Division, Section 1-C, Feb. 1965

4. Greszczuk, L.B., "Effects of Voids on Strength Properties of Filamentary Composites," Proceedings, 22nd Annual Technical Conference, SPI Reinforced Plastics Division, Section 20-A, Jan. 31, Feb. 1-3, 1967

5. Petker, I., SPE Trans. 5(No. 1):49-58 (1965)

6. Romans, J.B., and Sands, A.G. "Investigation of Cyclic Fatigue Properties of Glass-Filament-Wound Reinforced Plastics," NRL letter report 6120-122B:JBR:gsw, Ser 3266 of Mar. 27, 1967

7. Powell, R.W., J. Sci. Instr. 34:485-492 (1957)

8. Powell, R.W., and Tye, R.P., "Thermal Conductivity of Ceramic Materials and Measurements with a New Form of Thermal Comparator," In Special Ceramics, 1962; Proceedings of a Symposium of British Ceramic Research Assn., P. Popper, ed., New York:Academic pp. 261-280, 1963

9. Loeb, A.L., J. Am. Ceram. Soc. 37:96 (1954)

10. Maley, D.R., Apple, W.R., and Posakony, G.J., "Inspection of Reinforced Plastics by Thermal Nondestructive Techniques," Testing Techniques for Filament Reinforced Plastics Symposium, Sept. 1966, Technical Report AFML-TR-66-274, pp. 577-604, Jan. 1967

11. Baldanza, N.T., "A Review of Nondestructive Testing for Plastics; Methods and Applications," Plastec Report 22, pp. 95-99, Aug. 1965

12. Zurbrick, J.R., "The Quantitative Evaluation of Reinforced Plastics Using NDT," Proceedings, Regional Technical Conference of Soc. of Plastics Engineers, Baltimore-Washington Section, Section Y, Sept. 7-8, 1967

13. Baldanza, N.T., "A Review of Nondestructive Testing for Plastics; Methods and Applications," Plastec Report 22, pp. 54-63, Aug. 1965

14. Adams, C.J., "Ultrasonic Testing of Resin-Fiber Composites," Testing Techniques for Filament Reinforced Plastics, Symposium, Sept. 1966, Technical Report AFML-TR-66-274, pp. 509-528, Jan. 1967

15. Whealy, R.D., "Nondestructive Testing of a Composite Structure," Proceedings, Regional Technical Conference of Society of Plastics Engineers, Baltimore-Washington Section, Section R, Sept. 7-8, 1967

16. Hand, W., "Testing Reinforced Plastics with Ultrasonics; Plastics Technology, Feb. 1962

17. Missiles and Rockets, pp. 39-40, Aug. 12, 1963

18. Baldanza, N.T., "A Review of Nondestructive Testing for Plastics; Methods and Applications," Plastec Report 22, pp. 81-84, Aug. 1965

19. Hendron, J.A., Groble, K.K., Gruetzmacher, R.W., McClurg, G.O., and Retsky, M.W., Materials Evaluation 22:311-314 (1964)

20. Zurbrick, J.R., and Schultz, A.W., "Nondestructive Design Property Evaluation of Fabric Reinforced Composites," Testing Techniques for Filament Reinforced Plastics Symposium, Sept. 1966, Technical Report AFML-TR-66-274, pp. 675-699, Jan. 1967

21. Baldanza, N.T., "A Review of Nondestructive Testing for Plastics; Methods and Applications," Plastec Report 22, pp. 84-88, Aug. 1965

22. Hochschild, R., Nondestructive Testing 21:115-120 (1963)

23. Lavelle, T.M., Lehman, J.T., and Satshaw, D., "Microwave Techniques as Applied to Nondestructive Testing of Nonmetallic Materials," Test Report T67-9-1, U.S. Army Frankford Arsenal, Mar. 1967

24. Adams, D.K., "The Application of Microwave Techniques to Nondestructive Testing of Filament-Wound Plastics and Other Dielectric Media," Testing Techniques for Filament Reinforced Plastics, Symposium, Sept. 1966, Technical Report AFML-TR-66-274, pp. 605-637, Jan. 1967

25. Cribbs, R.W., Lamb, B.L., and Lucian, A.D., "Development of Microwave NDT Inspection Techniques for Large Solid-Propellant Motors," Final Report 0948 Phase 1, Aerojet-General Corporation, May 6, 1966

26. Romans, J.B., and Sands, A.G., "Investigation of Cyclic Fatigue Properties of Glass-Filament-Wound Reinforced Plastics; Quarterly Progress Report," NRL letter report 6120-322A:JBR:gsw, Ser 6611 of July 19, 1967

27. Hall, H.C., and Russek, R.M., Proc. of Inst. of Elec. Engineering, Part II - Power Engineering 101:47-55 (1954)

28. Starr, W.T., Elec. Mfg. 57(No. 6):132-139 (1956)

29. Gooding, F.H., and Slade, H.B., AIEE Trans. 76(Part III):999-1006 (1957)

Security Classification

DOCUMENT CONTROL DATA - R & D

(Security classification of title, body of abstract and indexing annotation must be entered when the overall report is classified)

1. ORIGINATING ACTIVITY *(Corporate author)*
Naval Research Laboratory
Washington, D.C. 20390

2a. REPORT SECURITY CLASSIFICATION
Unclassified

2b. GROUP

3. REPORT TITLE
NONDESTRUCTIVE TESTING FOR VOID CONTENT IN GLASS-FILAMENT-WOUND COMPOSITES

4. DESCRIPTIVE NOTES *(Type of report and inclusive dates)*
Final report on the NDT phase of the problem; work is continuing on other phases.

5. AUTHOR(S) *(First name, middle initial, last name)*
B.E. Walker, Jr., C.T. Ewing, and R.R. Miller

6. REPORT DATE
October 4, 1968

7a. TOTAL NO. OF PAGES
18

7b. NO. OF REFS
29

8a. CONTRACT OR GRANT NO.
NRL Problem C05-24

b. PROJECT NO.
RR 001-01-43

c.

d.

9a. ORIGINATOR'S REPORT NUMBER(S)
NRL Report 6775

9b. OTHER REPORT NO(S) *(Any other numbers that may be assigned this report)*

10. DISTRIBUTION STATEMENT
This document has been approved for public release and sale; its distribution is unlimited.

11. SUPPLEMENTARY NOTES

12. SPONSORING MILITARY ACTIVITY
Department of the Navy (Office of Naval Research), Washington, D.C. 20360

13. ABSTRACT

Precise nondestructive methods for void determinations on glass-filament-wound composites in the form of NOL rings and ring segments were tested for feasibility, with particular emphasis on the 0- to 3-vol-% void region. Strength of a composite has been shown to strongly depend on the void content of the sample. Therefore, the importance of void detection becomes apparent since it can predict the mechanical properties to be expected. Experimental data related to void content are presented for several possibilities – infrared transmission, backscatter from laser transmission, density measurements, and corona discharge inception. The merits and problems associated with these methods are discussed, and the feasibility of each as a nondestructive test method for void determinations on NOL rings is demonstrated in comparison with destructive void results.

DD FORM 1 NOV 65 1473 (PAGE 1)

S/N 0101-807-6801

Security Classification

Security Classification

14. KEY WORDS	LINK A ROLE	LINK A WT	LINK B ROLE	LINK B WT	LINK C ROLE	LINK C WT
NOL rings						
Nondestructive test						
Voids						
Glass-filament-wound composites						
Microvoids						
Test methods						

DD FORM 1 NOV 65 1473 (BACK)

(PAGE 2)

Security Classification