NRL Report 6769

Seawater Battery with Converter-Regulator as a Power Source for the AN/SSQ-38 Sonobuoy

J. M. Marzolf and B. J. Wilson

Energy Conversion Branch
Electronics Division

August 12, 1968

NAVAL RESEARCH LABORATORY
Washington, D.C.

This document has been approved for public release and sale; its distribution is unlimited.

ABSTRACT

The magnesium-anode/inert-cathode seawater battery has been impractical as a power source because of its low voltage per cell. Furthermore, the leakage paths through the common electrolyte has limited the number of cells that can be connected in series.

The development of solid-state static converters having high reliability and capable of operating on low input voltages has indicated the feasibility of the battery-converter power source for remote marine applications.

Laboratory tests have been made using this power source for operating an AN/SSQ-38 sonobuoy under the worst possible ambient conditions and was found to be completely satisfactory. The system is desirable because of its low cost, absence of silver (now in critical supply), and indefinite shelf life.

PROBLEM STATUS

This is an interim report; work on this problem is continuing.

AUTHORIZATION

NRL Problem E01-05
Project RR 010-04-5675

Manuscript submitted July 3, 1968.

SEAWATER BATTERY WITH CONVERTER-REGULATOR AS A POWER SOURCE FOR THE AN/SSQ-38 SONOBUOY

INTRODUCTION

The magnesium-anode/inert-cathode seawater battery operating in conjunction with a dc-to-dc converter-regulator presents a definite possibility to effect a substantial cost reduction for the AN/SSQ-38 sonobuoy electrical power supply. The intrinsic low cost of the battery and the logistic and replacement cost gains made possible by indefinite shelf life are the fundamental reasons leading to the cost reduction. The low voltage per cell has prevented the practical application of this type of battery, since most loads require voltages higher than those that may be conveniently obtained by a series connection of these cells. The existence of leakage paths through a common electrolyte coupled with the need to provide for adequate efflux of reaction products has precluded the series connection of an indefinite number of cells to obtain higher voltage outputs.

However, with the development of solid-state switching devices making possible relatively simple and reliable dc-to-dc converters, the application of the inert-cathode type of seawater batteries as power sources has been reexamined. Such converters, which use low-voltage, high-current transistors, are very inefficient at extremely low voltages but increase in efficiency with the input voltage. The seawater battery can be constructed with a few cells in series, in spite of the common electrolyte, but becomes less attractive as the output voltage increases. A reasonable compromise between these conflicting factors consists of a magnesium seawater battery with sufficient cells in series to obtain approximately 2 v, used in conjunction with a transistor dc-to-dc static converter with an output regulator to obtain a constant voltage output at any desired level.

The feasibility of this power system has been demonstrated on the AN/SSQ-38 sonobuoy. A magnesium seawater battery and a dc-to-dc converter-regulator were designed and constructed to supply 70 ma at 14.8 v over a 36-hr period. When testing this power source, a receiver monitored the radiated signal emanating from the AN/SSQ-38 sonobuoy antenna.

DESIGN AND PERFORMANCE OF THE SEAWATER BATTERY

The battery was designed on the basis of power requirements imposed by the converter-regulator, whose design in turn was determined by electronic load requirements and knowledge of nominal input voltage. This input voltage, also the battery output voltage, was arbitrarily set at 1.5 v to facilitate and expedite converter-regulator design. This 1.5 v represented a design point, as far as the seawater battery was concerned, and a lower limit for acceptable battery voltage. For example, the battery should produce an output voltage of at least 1.5 v at the lowest temperature (0°C) and/or lowest salinity (15°/oo) and over the operating duration (36 hr) expected and correspondingly specified for operation of the AN/SSQ-38 sonobuoy.

This so-called design voltage also represented a compromise between a sufficiently high value to operate the converter with good efficiency and a low value to simplify battery construction (1). Leakages were reduced by electrically isolating the cells short of excessive interference with access of electrolyte to them and without adding significantly to overall battery size.

Actually the choice of a battery-voltage design point should include consideration of the converter-regulator behavior at the input and allow for battery-voltage decrease during operation. Details of design for the actual battery are treated in the Appendix.

The converter-regulator characteristics most significant to battery design and performance are shown in Fig. 1. These characteristics define voltage and current demands imposed by the converter-regulator and load on the battery. In general, these characteristics reflect an emphasis on providing constant output voltage to the load over the relatively wide range of battery voltages expected due to specified operating extremes of temperature, salinity, and voltage falloff during operation.

The voltage-current experimental characteristics of the battery for specified temperature-salinity extremes are superimposed on Fig. 1. The intersections of the battery and converter-regulator input curve denote actual operating points. The design

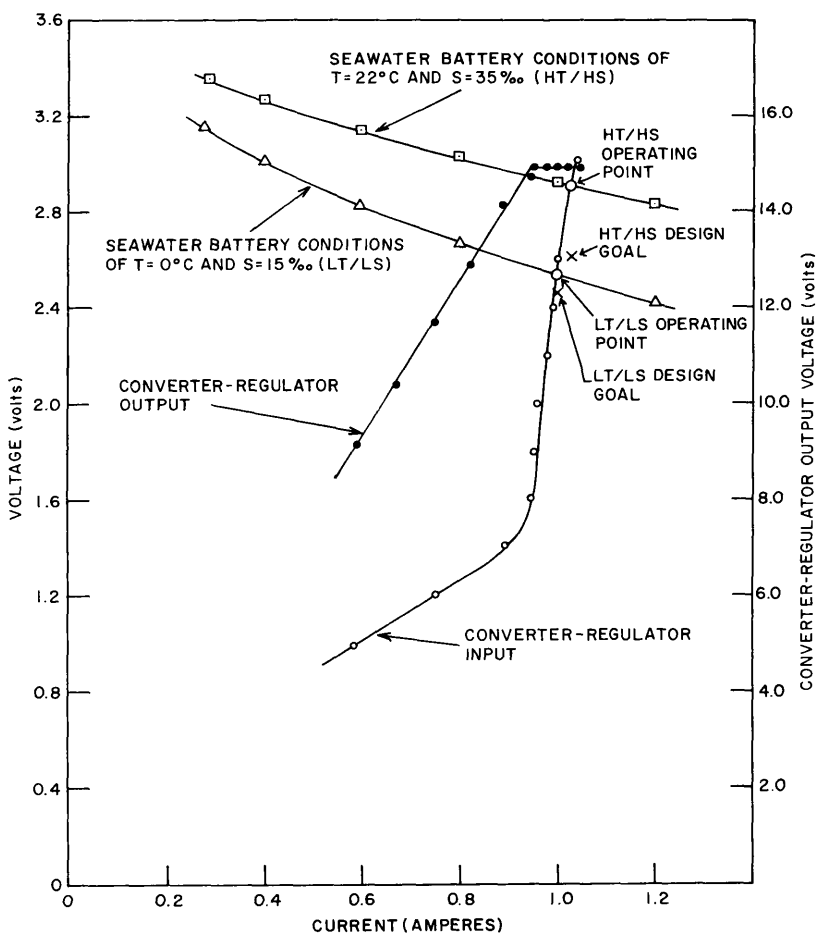

Fig. 1 - Characteristics of the battery and converter-regulator using high-temperature/high-salinity (HT/HS) conditions and low-temperature/low-salinity (LT/LS) conditions

goal for the low-temperature, low-salinity condition is shown with respect to the corresponding operating point, 2.8% below the actual test operating point. An actual comparison of performance against design is also illustrated for the higher temperature (T = 22°C), higher salinity (S = 35°/oo) conditions considered, where the disparity between predicted and measured results is 11%.

When operated over the 36-hr period, the battery/converter-regulator system demonstrated a smaller decrease in input voltage at the low-temperature, low-salinity extreme than at the higher extreme, indicating a lesser rate of reaction-product accumulation on the electrodes and longer battery life because of less power dissipation in the regulator. A 23% drop in voltage was experienced at the lower extreme; a 46% drop was experienced at the upper extreme. Hence, in the former instance the initial 2.53 v dropped to 1.95 v over the 36-hr period, and in the latter instance the initial 2.90 v dropped to 1.56 v, both final values being above the 1.50-v lower-design limit.

A schematic diagram of the battery assembly is shown in Fig. 2. Overall dimensions are 6 by 3-1/4 by 2-1/4 in. A comparison of the relative parameters for the silver chloride battery now being used in the AN/SSQ-38 sonobuoy and the magnesium seawater battery only (excluding the converter-regulator) are shown in Table 1. These figures were derived from actual measurement. The cost of the silver chloride battery was supplied by the Naval Air Systems Command prior to recent increases in silver prices.

The chief disadvantages of the magnesium seawater battery-converter system stem primarily from two causes: (a) the relatively large change in battery output voltage with operating time, requiring an output regulator to provide a constant output voltage and (b) the losses in the converter.

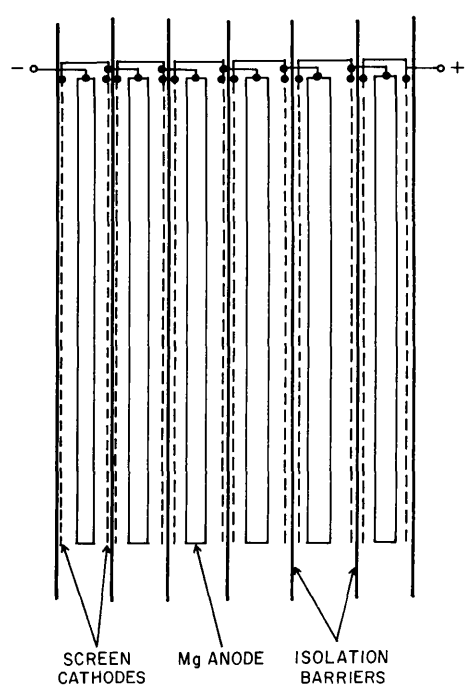

Fig. 2 - Seawater battery

Table 1
Comparison of the Relative Parameters for the Silver Chloride and Magnesium Seawater Batteries

Battery	Size (in.^{3})	Weight (lb.)	Energy Density (w-hr/lb)	Cost ($)
Silver chloride	77.5	4.25	79.4	55.00
Magnesium	44.0	1.5	53.2	5.00

The first of these disadvantages is the most serious. To insure reliable operation of the sonobuoy, the battery-converter system must be designed for the worst possible conditions, namely low temperature, low salinity, and end of life. Under all other conditions, the battery output exceeds the sonobuoy requirements, and this excess power is dissipated as heat in the regulator. For large power requirements, this situation might not be tolerable, but for power requirements of a few watts this is not serious, especially in consideration of the lower cost and indefinite shelf life that can be gained.

DESIGN AND OPERATION OF THE TRANSISTOR CONVERTER-REGULATOR

The converter-regulator provides the link between the seawater battery power source and the AN/SSQ-38 sonobuoy load. It raises the voltage level from the low voltage supplied by the seawater battery to a constant higher voltage required by the sonobuoy and thus insures the compatibility of power source and load for all ambient operating conditions.

The circuit used (Fig. 3) was designed for an input voltage range of 1.5 to 2.0 v with a constant output voltage of 14.8 v for a nominal load of 70 ma. The design frequency of the inverter was 1000 Hz at an input voltage of 1.5 v. Since the output is rectified, the frequency employed is immaterial except for its effect on the efficiency or size and weight. This frequency represents a reasonable compromise between these conflicting parameters.

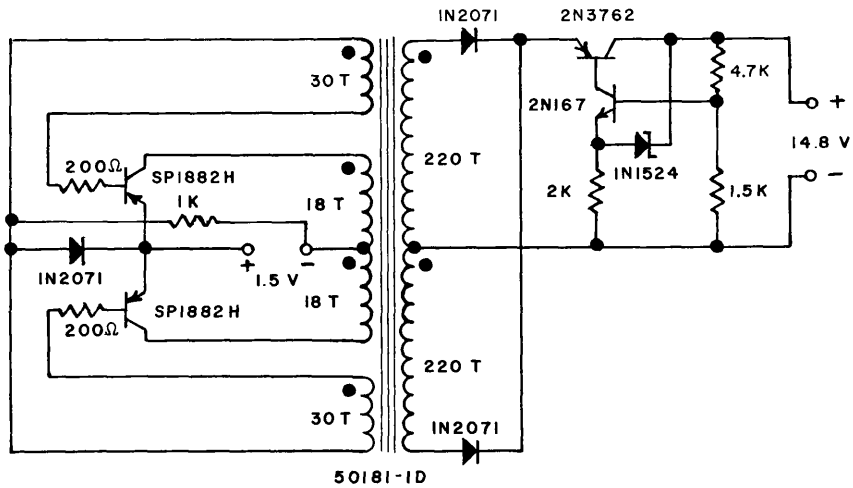

Fig. 3 - Converter - regulator circuit

The output voltage of the converter is also directly proportional to the input voltage, and such a wide range would not be acceptable for operation of the AN/SSQ-38 sonobuoy. The portion of the output circuit containing the 2N3762 and 2N167 transistors provides the regulating feature to insure a constant output voltage. Since the regulator is dissipative in nature, it does reduce the efficiency as shown in Table 2, but for the power levels involved, this can be tolerated.

Table 2
Test of Converter-Regulator for AN/SSQ-38 Sonobuoy

Input			Output			Efficiency (%)	Load
Volts	Amperes	Watts	Volts	Amperes	Watts		
1.0	0.45	0.450	9.6	0.033	0.317	70.5	Dummy resistive load and laboratory power Supply
1.2	0.58	0.695	12.2	0.041	0.500	72.0	
1.4	0.69	0.966	14.4	0.048	0.690	71.5	
1.5	0.71	1.065	14.9	0.050	0.746	70.0	
1.6	0.72	1.153	15.0	0.050	0.751	65.0	
1.8	0.73	1.315	15.0	0.050	0.751	57.2	
2.0	0.74	1.480	15.0	0.050	0.751	50.7	
1.0	0.60	0.600	9.4	0.045	0.423	70.5	
1.2	0.75	0.900	11.8	0.056	0.662	73.5	
1.4	0.90	1.260	14.0	0.067	0.939	74.5	
1.5	0.95	1.427	14.7	0.069	1.015	71.2	
1.6	0.96	1.538	14.8	0.070	1.037	67.4	
1.8	0.97	1.748	14.9	0.070	1.044	59.7	
2.0	0.98	1.960	14.9	0.070	1.044	53.3	
1.2	0.91	1.091	11.4	0.068	0.776	71.0	
1.4	1.11	1.555	13.8	0.083	1.145	73.6	
1.5	1.17	1.757	14.6	0.089	1.299	74.0	
1.6	1.19	1.905	14.7	0.090	1.323	69.5	
1.8	1.20	2.161	14.7	0.090	1.323	61.2	
2.0	1.22	2.440	14.8	0.090	1.330	54.5	
1.75	0.970	1.700	14.8	0.071	1.050	61.7	AN/SSQ-38 load and Seawater battery power source

The converter-regulator was tested in the laboratory for various input voltages and loads. It was also used with the seawater battery shown in Fig. 4, alongside of the battery now being used to operate an AN/SSQ-38 sonobuoy. The data obtained are given in Table 2, and the curve of input voltage vs output voltage is shown in Fig. 5, which clearly indicates the function of the regulator. Operation under laboratory conditions was entirely satisfactory for one test of 3 hr and continued to operate with very little change until the experiment was terminated. The converter-regulator used in these tests is shown in Fig. 6. Since this device was intended for laboratory use only, no attempt was made to minimize the package size or to protect it from environmental hazards expected in operational use. Undoubtedly such a device, intended for fleet operation, would be more compact and would be potted for protection from moisture, shock, vibration, etc.

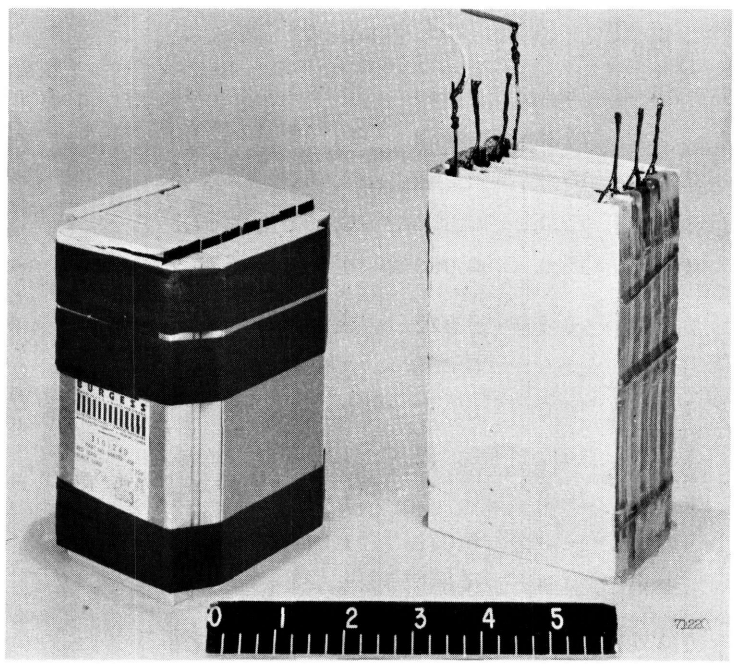

Fig. 4 - Magnesium seawater battery and silver chloride battery now in use

SUMMARY

The 1.5-v seawater battery with a converter-regulator power conditioning system has been used successfully to operate the AN/SSQ-38 sonobuoy under laboratory conditions. The tests indicated that the system would operate satisfactorily under all specification conditions of temperature and salinity. Losses are imposed by the requirement for an output-voltage regulator and the converter operation, but these may be tolerated to obtain the advantages of (a) low cost, (b) absence of silver, now in critical supply and mounting in cost, and (c) indefinite shelf life, simplifying the logistic and readiness problems.

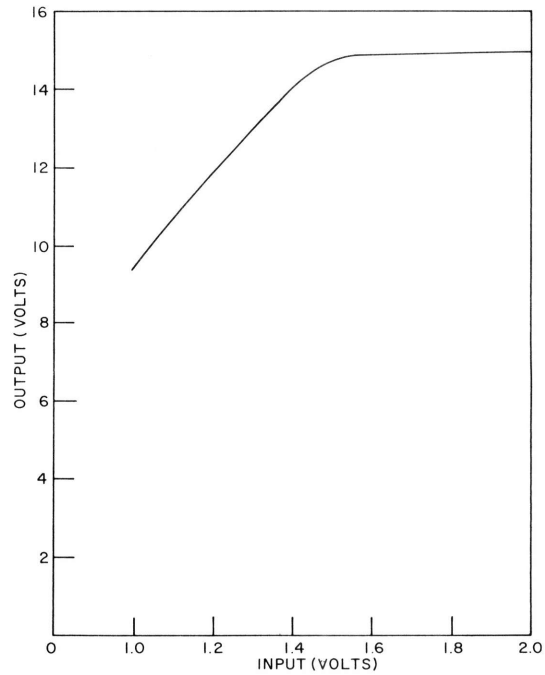

Fig. 5 - Converter-regulator input and output characteristics

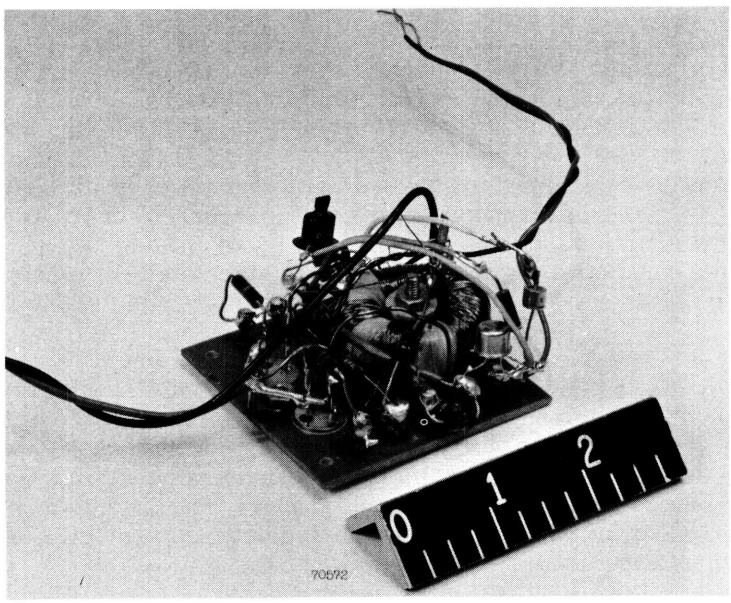

Fig. 6 - Converter-regulator

REFERENCE

1. Wilson, B.J., "Characteristics of an Improved Inert-Cathode/Magnesium-Anode Seawater Battery," NRL Report 6715, June 1968

Appendix

DETAILS OF BATTERY DESIGN

Prior knowledge of the converter-regulator characteristics as shown in Fig. 1 makes possible a judicious choice of battery voltage design target. In this instance the 1-amp operating point of the converter-regulator was chosen as a starting point in the design of the battery. By selecting an operating current density J of 5.0 amp/ft^2 from the basic cell voltage-current characteristic* at temperature T of 0°C and salinity S of 10°/oo, the cell voltage V (per cell) is 0.33 v. The active electrode area for a cell consisting of a magnesium anode flanked by a cathode on each side was 28.8 in.^{2}, or 14.4 in.^{2} on each side of the anode. The battery was constructed with an active anode dimension of 2-7/8 by 5 in.

With six cells in series a terminal voltage of 1.98 v would be expected at this current density, if no intercell leakage were experienced. However, at this voltage level the actual battery terminal voltage is 88.7% of that estimated by simple addition of individual cell voltages,* in the presence of coplanar intercell barriers 1/2 in. in length at the top and bottom of the battery whose sides were enclosed along the 5-in. dimension. Thus, when the effect of leakages among cells is included in battery voltage prediction, the result is 1.76 v. Since this prediction is based on data at S = 10°/oo, correction to the S = 150°/oo level on the basis of electrolyte conductivity change results in an expected battery terminal voltage of 2.46.*† Actual operation of the converter-regulator with the battery at T = 0°C and S = 15°/oo resulted in a battery terminal voltage of 2.53 v, or 2.8% above that predicted.

It is instructive to compare this result with that which would be obtained at T = 22°C and S = 35°/oo. Proceeding from the basic voltage-current characteristic,* the operating point of V (per cell) = 0.65 v and J = 5.3 amp/ft^2 was chosen. Advantage was taken of the known converter-regulator characteristics which indicated the existence of higher input currents at the higher input voltage expected with increased temperature and salinity.

With six cells in series a terminal voltage of 3.90 v would be expected at this current density. Again, a reduction in terminal voltage would result from that estimated by simple addition of cell voltages, this time to approximately 67.0% of the 3.9-v value, or 2.61 v. The actual battery voltage was 2.90 v when operating the converter-regulator load under the same temperature-salinity conditions assumed in the prediction. This constitutes an error in battery voltage of 11% above that predicted and is a result closer to the roughly 10% error which may be expected between predicted and actual performance based on previous experience.

---

*B.J. Wilson, "Characteristics of an Improved Inert-Cathode/Magnesium-Anode Seawater Battery" NRL Report 6715, June 1968.

†J.C. Riley and G. Skirron, "Chemical Oceanography," Vol. 1, New York:Academic, 1965.

Security Classification

DOCUMENT CONTROL DATA - R & D

(Security classification of title, body of abstract and indexing annotation must be entered when the overall report is classified)

1. ORIGINATING ACTIVITY *(Corporate author)* Naval Research Laboratory Washington, D.C. 20390	2a. REPORT SECURITY CLASSIFICATION Unclassified 2b. GROUP

3. REPORT TITLE
SEAWATER BATTERY WITH CONVERTER-REGULATOR AS A POWER SOURCE FOR THE AN/SSQ-38 SONOBUOY

4. DESCRIPTIVE NOTES *(Type of report and inclusive dates)*
Interim report; work is continuing on the problem.

5. AUTHOR(S) *(First name, middle initial, last name)*
J.M. Marzolf and B.J. Wilson

6. REPORT DATE August 12, 1968	7a. TOTAL NO. OF PAGES 11	7b. NO. OF REFS 1
8a. CONTRACT OR GRANT NO. NRL Problem E01-05 b. PROJECT NO. RR 010-04-5675 c. d.	9a. ORIGINATOR'S REPORT NUMBER(S) NRL Report 6769 9b. OTHER REPORT NO(S) *(Any other numbers that may be assigned this report)*	

10. DISTRIBUTION STATEMENT
This document has been approved for public release and sale; its distribution is unlimited.

11. SUPPLEMENTARY NOTES	12. SPONSORING MILITARY ACTIVITY Department of the Navy (Office of Naval Research), Washington, D.C. 20360

13. ABSTRACT

The magnesium-anode/inert-cathode seawater battery has been impractical as a power source because of its low voltage per cell. Furthermore, the leakage paths through the common electrolyte has limited the number of cells that can be connected in series.

The development of solid-state static converters having high reliability and capable of operating on low input voltages has indicated the feasibility of the battery-converter power source for remote marine applications.

Laboratory tests have been made using this power source for operating an AN/SSQ-38 sonobuoy under the worst possible ambient conditions and was found to be completely satisfactory. The system is desirable because of its low cost, absence of silver (now in critical supply), and indefinite shelf life.

DD FORM 1 NOV 65 1473 (PAGE 1)

S/N 0101-807-6801

Security Classification

Security Classification

14. KEY WORDS	LINK A ROLE	LINK A WT	LINK B ROLE	LINK B WT	LINK C ROLE	LINK C WT
Seawater battery						
Magnesium anode						
Inert cathode						
Converters						
Sonobuoy						
Power sources						

DD FORM 1 NOV 65 1473 (BACK)
(PAGE 2)

Security Classification