NRL Report 6795

Biophysical Studies of Microbial Cell Walls

Part 2 - Electrophoresis: Apparatus and Exploratory Experiments

R. A. Neihof and W. H. Echols

Protective Chemistry Branch
Chemistry Division

November 15, 1968

NAVAL RESEARCH LABORATORY
Washington, D.C.

This document has been approved for public release and sale: its distribution is unlimited.

PREVIOUS REPORTS IN THE SERIES

"Part 1 – The Preparation of Isolated Cell Walls," R. A. Neihof and W. H. Echols, NRL Report 6699, June 19, 1968.

CONTENTS

Abstract	ii
Problem Status	ii
Authorization	ii
INTRODUCTION	1
APPARATUS AND METHODS	2
Observation Chamber	2
Apparatus Support and Thermostat	3
Optical System	4
Electrodes	5
Power Supply	7
Determination of Mobility	7
ELECTROPHORESIS RESULTS	8
Errors and Reproducibility	8
Mobility Variations with Culture Age	8
Effect of Substances Leached from Glass on Microbial Mobilities	9
Mobilities of Microbial Cells and Isolated Cell Walls	11
DISCUSSION	16
REFERENCES	19

ABSTRACT

Electrophoresis is one of the few physicochemical methods available for the quantitative study of the nature of microbial cell surfaces. Microelectrophoretic apparatus suitable for work with both intact cells and their isolated cell walls has been constructed. Distinguishing features of the system are palladium-hydrogen electrodes, a precision-built flat observation chamber, phase contrast optics, and a water bath for the rapid dissipation of ohmic heat and maintenance of a defined temperature. The electrophoretic mobilities of selected organisms were reproducible, homogeneous, and insensitive to the presence of substances leached from glass vessels. The surfaces of the microbes chosen for this investigation were dominated by electronegative charges derived most probably from carboxyl and phosphate groups. The adsorption of anions from the suspending media made an insignificant contribution to the charge. Amino groups appeared to be entirely absent. The mobilities of isolated cell walls under varying conditions of pH and ionic strength were very similar to those of the corresponding intact cells. Thus, studies on isolated cell walls can provide a valid way of characterizing the wall surface which is especially useful under conditions where the intact cells are likely to be lysed or are pathogenic. Further work is necessary to characterize more completely the density and nature of the negatively charged surface groups and to explain the absence of surface amino groups and the small but consistent mobility differences between intact cells and their corresponding cell walls.

PROBLEM STATUS

This is an interim report; work on the problem is continuing.

AUTHORIZATION

NRL Problem C05-21
Project RR 001-01-43-4757

Manuscript submitted August 20, 1968.

BIOPHYSICAL STUDIES OF MICROBIAL CELL WALLS

PART 2 -- ELECTROPHORESIS: APPARATUS AND EXPLORATORY EXPERIMENTS

INTRODUCTION

The surfaces of microbial cells are of particular interest from many points of view. The properties of their surfaces govern their adhesion to solid and liquid interfaces or to each other and may thus be critical for the physiology and ecology of microbes in the oceans and in soils and also for such practical purposes as the control and treatment of fluids or solid surfaces contaminated by human or industrial wastes. Specific interactions with antibodies, phage, and bacteriocins are also known to occur at the microbial cell surface. A better understanding in physical and chemical terms of the surface features responsible for such specificities might provide a basis for developing a rapid method of distinguishing one organism from another and thus of detecting and identifying pathogenic or other organisms of practical importance.

Electrophoresis, the movement of a particle in an externally applied electric field, is one of the few available physicochemical methods for the quantitative study of the nature of biological cell surfaces. It has the important virtue of causing little or no disturbance to the cell. Measurement of the electrophoretic mobility of a cell in a variety of different, defined media can yield much valuable information about the chemical nature of the surface groups. By a judicious application of theoretical considerations the potential difference between the surface of the cell and the solution can be calculated and the average net surface charge density estimated therefrom.

Two experimental techniques are available for an analytical, electrophoretic study of particles in suspensions — the moving boundary method and the microscope method. In the former the motion of the boundary of a suspension layered under a buffer solution is observed. Although this method is very successfully used for the study of dissolved biological macromolecules, it has not been generally useful for the study of particles large enough to be visible in the microscope because of turbidity, gravity settling, and other factors leading to boundary irregularities; it is also slow, and low temperatures and low ionic strengths are necessary. Electrophoresis by the microscope method, also termed microelectrophoresis and cell electrophoresis (1), involves the observation of the motion of the individual particle in suspension by the use of a microscope. With this method the difficulties of the moving boundary method are avoided, but it has some of its own difficulties, a major one being the unavailability, until recently, of satisfactory commercial equipment. The great variety of laboratory-built apparatus which has been described in the literature is a good indication of the many difficulties which investigators have encountered in attempting to make a seemingly simple basic measurement.

An apparatus built in this laboratory several years ago (2) offered a major improvement in the method of applying the potential gradient. This was accomplished by using the palladium-hydrogen electrode system described by Neihof and Schuldiner (3). These electrodes combine the simplicity of platinum and the high current-carrying capacity of reversible electrodes without danger of generating gas bubbles which imparts an unwanted motion to the particles being observed, or contaminating the suspension medium with heavy metal ions. Since the first description of the apparatus, several improvements have been made in the observation chamber, the optics, and the power supply. These improvements will be described herein.

The value of electrophoresis as a tool for studying the physicochemical properties of cell surfaces can be readily extended beyond the usual experiments in which effects on the normal surface caused by changes in pH and ionic strength are observed. Specific chemical reactions, such as the esterification of carboxyl groups, can be carried out to help identify the chemical nature of the groups on the surface, the only requirement being that a change in the charge of the groups be produced (4-6). Even uncharged groups ordinarily not amenable to study by electrophoresis could be explored by subjecting them to specific reactions which produce a charge. Numerous possibilities exist in this area and will be discussed in subsequent reports.

Carrying out chemical reactions on the intact microbial cell introduces a serious complication, namely, the possibility of damaging the permeability barriers so that cytoplasmic constituents escape and adhere to the cell surface, thus interfering with the electrophoretic behavior (7). Also, the gradual leakage of ionic constituents from a damaged cell may invalidate electrophoretic results in media of low ionic strength. These dangers can be avoided by working with isolated cell walls free of other cell constituents. Unless changes in the surface occur during the process of preparing the walls, the electrophoretic results on isolated cell walls should be valid for intact cells. A portion of this report is devoted to the comparison of mobilities of intact cells and their isolated cell walls, a necessary prerequisite for the meaningful use of cell walls in place of intact cells.

APPARATUS AND METHODS

Observation Chamber

In the course of building several electrophoresis systems in which the commercially available flat rectangular observation chambers were incorporated (2) it was found that the accepted value for the mobility of human erythrocytes under standard conditions could not always be obtained. The difficulty was eventually attributed to nonplanarity and lack of parallelism of the chamber faces, which apparently cause inhomogeneities in the electric field and irregularities in hydrodynamic flow conditions. The trouble was eliminated when a chamber constructed to the same exacting standards as used for cuvette construction was substituted.

The observation chamber (Opticell, Inc., Brentwood, Md.) presently used in our principal microelectrophoresis apparatus was sealed into a braced, one-piece unit with the electrode compartments attached as shown in Fig. 1. The internal dimensions of the chamber are 11.15 mm wide, 40 mm long, and 0.600 ± less than 0.002 mm deep. Minor improvements over earlier chambers include a greater rounding of the corners to eliminate any tendency for bubble entrapment and the placement of the filler tube in the connecting tube between the observation chamber and electrode compartment to permit measurements on smaller volumes of suspension. Volumes as small as a few tenths of a milliliter would probably be sufficient, if means for precisely drawing over the sample into the observation chamber (previously filled with suspension medium) were provided. A valve previously positioned in the filler tube (2) was considered unnecessary. The volume of solution necessary to fill the observation chamber and electrode compartments was about 10 ml.

For special purposes other types of electrophoresis units have been constructed. A flat all-Lucite chamber measuring 19 mm wide, 0.795 mm thick, and 70 mm long internally, is shown in Fig. 2. This chamber has a laminated construction consisting of three cemented sheets of plastic, the base being 1/16 in. thick, the top cover 1/32 in. thick, and the middle section in which the channel is cut out also 1/32 in. thick. Lucite electrode compartments at either end have tapered holes to accommodate electrodes mounted on correspondingly tapered stoppers. A glass unit similar to that in Fig. 1 has been

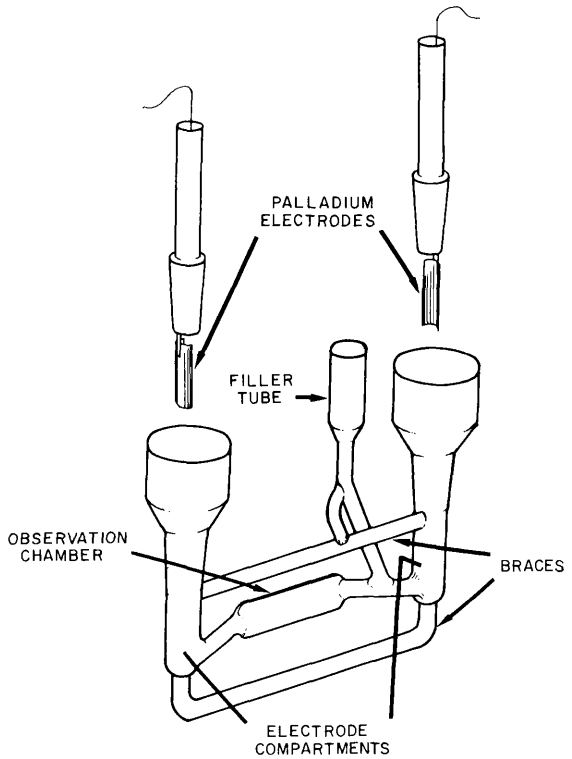

Fig. 1 - Glass microelectrophoresis unit

constructed but with a chamber of square cross section in place of a rectangular one. In common with the more conventional capillary chambers it has the advantage of requiring very small volumes of suspension and generating less ohmic heat than rectangular chambers. The problems with optical distortions encountered in capillary chambers are absent. The hydrodynamic conditions prevailing in a square tube have been worked out by Cornish (8) and White (9). An evaluation of this apparatus will be presented elsewhere.

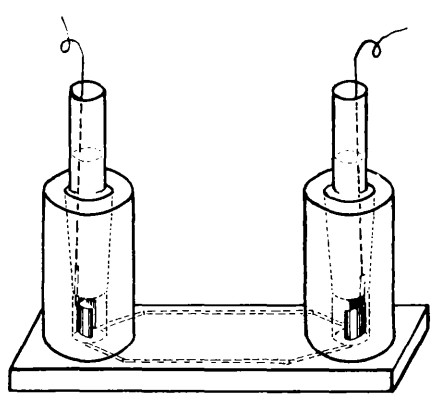

Fig. 2 - An electrophoresis unit constructed entirely of Lucite plastic

The simplest unit yet constructed is shown schematically in Fig. 3. It consists of a capillary tube with faces ground to permit microscopic observation and palladium wire electrodes thrust into each end. Silicone rubber or thermoplastic resin serves to close one end. Filling and emptying is accomplished through the open end by a syringe fitted with a length of Teflon tubing. The apparatus may be useful for short-term investigations in media of low ionic strength.

Apparatus Support and Thermostat

The principal electrophoresis unit (Fig. 1) was supported inside a Lucite tank with internal dimensions 4.5 cm wide, 13.5 cm high, and 37 cm long through which distilled

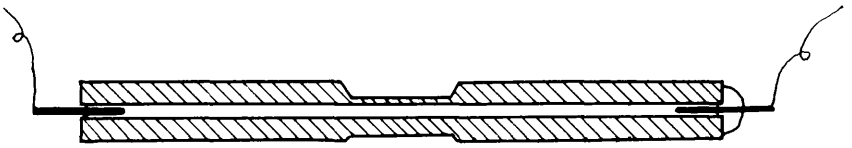

Fig. 3 - Simple electrophoresis unit for minimal suspension volumes

water at 25.00°C was pumped from an auxiliary thermostat (Fig. 4). The tank was rigidly held by a heavy brass framework bolted to a heavy metal plate which supported the microscope. For mounting, the observation chamber was positioned so that its long axis was horizontal and its face centered and perpendicular with respect to the optical axis of the microscope. The unit was fixed in place with a polyurethane composition (Adiprene L-167, cured with MOCA, DuPont), polymerized in place between the upper part of the electrode compartments and Lucite rings bolted to brass holders resting on the brass frame holding the tank. Set screws in the holders served for making any necessary final adjustment in the position of the chamber. Ordinary epoxy cements proved unsuitable for fixing the unit in place, because contraction over a period of time causes the glass to break.

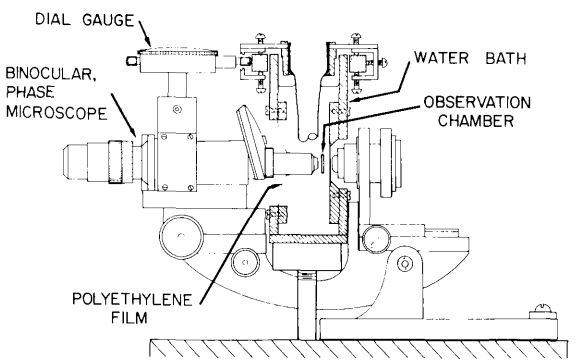

Fig. 4 - Side view of the microelectrophoresis apparatus

To accommodate the objective and condenser of the microscope, circular holes about 6.5 cm in diameter were cut in the front and back of the tank. A thin polyethylene diaphragm was held in place across the hole in front by a Lucite ring screwed down around its edge. In the center of the diaphragm a hole slightly smaller than the diameter of the microscope objective barrel was cut so that when the latter was forced through, a leakproof seal was formed. The hole in the rear of the tank was covered by a disk of Lucite with a small hole in the center across which was cemented a thin glass window admitting illumination from the condenser.

Optical System

In general, the glass or plastic surfaces in an electrophoresis observation chamber carry an electronegative charge in contact with the usual electrolyte media. The application of a potential difference across the chamber leads to an electroosmotic movement of liquid near the wall toward the cathode. In a closed system this flow forces a return flow through the center of the chamber. Between these two opposing currents two so-called "stationary levels" exist at readily computed distances from the front and rear walls of the chamber where no net flow of liquid occurs. The true electrophoretic mobility of a

particle can only be observed at these two levels. The optical system of the electrophoresis apparatus must be capable of clear definition and precise focusing of particles in these stationary levels; otherwise, the observed particle velocity may have superimposed on it a component of the electroosmotically induced flows.

Ordinary bright-field microscope illumination is inadequate for viewing such small poorly refracting particles as bacterial cell walls. The electrophoresis apparatus must, therefore, be adaptable to some special form of illumination, such as dark field or phase contrast which will improve contrast. Any measures that can be taken to reduce the eyestrain involved in making an extended series of measurements is also highly desirable.

We have succeeded in meeting these requirements by adapting phase-contrast optics and a binocular microscope body tube to our electrophoresis system. A 40X water-immersion, phase objective (Zeiss) with a numerical aperture of 0.75 and working distance of 1.6 mm was chosen. The oculars were 10X paired (Bausch and Lomb) in a straight binocular body (Bausch and Lomb). One ocular carried a micrometer disk inscribed with a checkerboard of 0.7-mm squares. A phase-contrast condenser (Bausch and Lomb) with a working distance of 8 to 10 mm was used and fitted with a special stop to correspond with the phase ring in the objective under the operating conditions used. It was focused by the Köhler method on the contents of the electrophoresis chamber through the thin glass window at the rear of the thermostat tank. Illumination was provided by an incandescent lamp in a focusing lamphouse carrying a green filter.

In calibrating the micrometer disk with a standard slide it was necessary to allow for changes in magnification which occur with changes in the interocular distance. Where operators with different interocular distances use the apparatus, a calibration for each setting must be made. With the particular objective employed here it was also noted that the calibration differed slightly depending on whether it was made in air or in water. To correspond with actual use our calibration was made with the objective and calibrated slide immersed in water.

The fine focus scale of the microscope became somewhat worn and inaccurate from long use, and we found it convenient to adopt a suggestion of Bangham, et al. (10), and mount on the binocular body a sensitive dial indicator gage (Ames, 216.2) graduated in microns. The foot of this gage rested against the brass cross piece holding the thermostat tank. To be sure of an accurate reading after focusing a few light taps with a pencil on the binocular body were usually necessary. Since some backlash was present in the focusing system, the stationary levels were always approached from the reference point, i.e., an inner chamber surface, by moving the carriage in one direction only without reversals. Coil springs between the front of the tank and the microscope carriage maintain the necessary tension for smooth continuous movement.

Useful bright-field objectives for use with the plastic cell and the small-volume square and capillary cells were the Leitz long-working-distance oil-immersion objectives 53X and 22X, respectively.

Electrodes

The electrochemical reactions occurring at palladium electrodes precharged cathodically with hydrogen may be written as (11)

$$xH_3O^+ + PdH_n + xe^- = PdH_{n-x} + xH_2O \qquad \text{(at low pH)}$$

$$xH_2O + PdH_n + xe^- = PdH_{n-x} + xOH^- \qquad \text{(at high pH).}$$

The cathodic reactions go from left to right, and the anodic reactions go in the reverse direction. The remarkable ability of palladium to dissolve large amounts of atomic hydrogen is crucial for its use as a current-carrying electrode. Clean palladium electrodes charged cathodically with hydrogen can carry direct currents in excess of 40 ma/cm^2 without gassing or releasing noticeable amounts of soluble palladium salts. Several years of use in this laboratory have proven the particular usefulness of palladium electrodes in microelectrophoresis systems. This experience does, however, prompt several observations.

As long as the electrodes were adequately charged with hydrogen, no evolution of gas bubbles was ever observed, even with high current densities. Occasionally, however, with high currents and electrodes whose surfaces were somewhat contaminated by long use, soluble palladium was released at the anode, visible in halide solutions as a brown coloration. This reaction was most readily eliminated by anodic electrolysis in a dilute HCl solution until the hydrogen charge was exhausted and palladium chloride freely dissolved. After recharging with hydrogen in a fresh acidic solution, the electrodes were ready for use.

When clean, well-charged electrodes were used, no anomalous electrophoretic results have ever been attributable to the presence of soluble palladium salts. However, in view of the sensitivity of the electrophoretic behavior of microbial cells to the presence of trace amounts of heavy metal ions, it was thought prudent to make an investigation of the conditions under which palladium might be dissolved from the electrodes. Accordingly, experiments were carried out in apparatus somewhat similar to that of Fig. 1 except that a rubber tube of about the same cross-sectional area and length as the electrophoresis chamber was substituted for this chamber. A measured unidirectional current was passed for a measured time (usually 5 min) between two precharged palladium-foil electrodes of 1.4-cm^2 total area each. The rubber tube was then clamped shut, and the solutions from the electrode compartments were removed and analyzed separately (after suitable pH adjustment) using dithizone or p-nitrosodiphenylamine as colorimetric reagents (12,13). The results of numerous experiments may be summarized as follows: In the cathodic compartment palladium could not be detected (<0.5 μg) with solutions of strong acids, bases, and a variety of the more commonly used salts. In the anodic solutions palladium could be detected in amounts up to 5 μg using HCl in concentrations up to 0.1N at current densities of 3 to 4 ma/cm^2 of electrode surface area for 5 min. In neutral or basic solutions and with lower current densities palladium was not detected or was considerably reduced.

Thus, even under extreme conditions of acidity and current density concentrations of dissolved palladium in the electrode compartments are hardly great enough to affect the mobilities of microorganisms (14,15). Moreover, the migration of dissolved palladium during a normal mobility determination would not be expected to proceed more than a millimeter into the tubes leading to the observation chamber. To prevent any accumulation of traces of soluble palladium or, more importantly, the products of the unavoidable electrolytic reactions occurring at the electrodes (hydroxyl or hydronium ions or iodine in iodide solutions), we routinely flushed out the electrode compartments with fresh medium after every set of velocity determinations.

We have also carried out some experiments to determine how frequently palladium electrodes should be charged with hydrogen. Electrodes charged with known amounts of hydrogen were exposed to various storage conditions. The amount of hydrogen spontaneously lost was subsequently determined by the difference between the initial charge and the final amount as measured by the amount of ceric ion reduced in a standard solution of ceric ammonium sulfate. It was concluded that exposure to air or aerated solutions overnight exhausted most of the hydrogen. In the absence of oxygen or readily reduced solutes the electrodes maintain their charge indefinitely. Thus, with the usual experimental electrophoresis procedure, in which the direction of current is frequently reversed, it is sufficient to recharge the electrodes with 5 to 10 coulombs before use each day.

The electrodes routinely used in our apparatus were pieces of palladium foil, which measured 10 by 25 by 0.127 mm, welded to a narrow strip of palladium which was connected with silver solder to a copper lead and sealed into the end of a 12/30 glass plug with epoxy resin so that no solder or copper was exposed. The plug on the closed end of the apparatus was lapped into the electrode chamber socket with an aqueous suspension of fine carborundum powder to make a leakproof seat.

Power Supply

A significant improvement over the usual current sources can be made by the use of an electronically regulated constant-current device, which can be purchased commercially or built from published designs (16). With our equipment (Model C 612, Electronic Measurements Co., Inc.) the current is held constant to less than 0.1%, regardless of asymmetries in the electrode potentials or changes in the conductivity of the electrolyte, as long as the voltage demanded does not exceed the maximum available (300 v). It is not advisable to operate a constant-current source on open circuit; therefore, the usual switching arrangement for reversing the direction of current during mobility determinations and for disconnecting the electrodes must be designed to take care of this requirement. We used a wafer switch connected as shown in Fig. 5.

A multiple range ammeter (Sensitive Research Instrument Corp., Polyranger model S-2) sensitive to less than 0.5% was used. It was calibrated in a circuit with a standard resistor across which the potential could be measured accurately with a potentiometer.

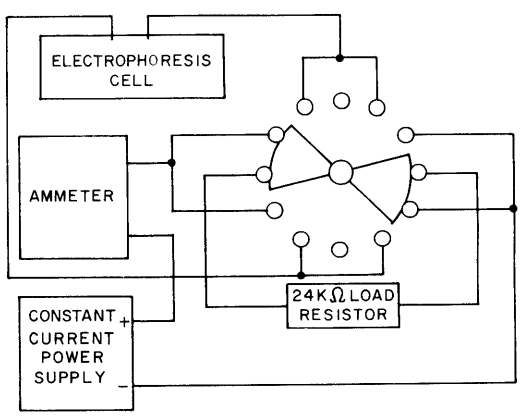

Fig. 5 - Electrical circuit for the microelectrophoresis system

Determination of Mobility

The electrophoresis apparatus was cleaned by filling it with a mixture of equal volumes of concentrated H_2SO_4 and HNO_3. After a few minutes it was thoroughly washed with distilled water and allowed to stand overnight with dilute phosphate or other buffer solution at pH 7. The apparatus was then flushed and filled with the medium in which the mobility determinations were to be made. (The Lucite cell was cleaned with 10% NaOH in 50% EtOH solution and similarly washed.) The stoppers (ungreased), carrying the palladium electrodes, previously charged cathodically with hydrogen (in dilute HCl with a platinum-foil anode) for 10 to 15 min at 10 ma and rinsed in the experimental medium, were inserted into the cell taking care to exclude air bubbles. Two or 3 ml of the suspension of microorganisms at a concentration of about 10^8/ml were pipetted into the filler tube and allowed to run into the cell by raising slightly the left-hand stopper. The electrode leads were connected to the electrical circuit, and the microscope was focused on one of the stationary levels using the back or front surface as a reference point. For our glass cell this is 20.2% of the total depth of the cell measured from the front or the back (17). A particle was timed over several reticule divisions, the current was reversed, and the same particle was timed over the same distance in the opposite direction. The distance (usually 50 to 100 μ) was chosen to give a total excursion time of 10 to 15 sec. The time was measured to 0.1 sec by an electric clock actuated by a microswitch. After ten particles had been timed, the microscope was focused on the other stationary level, and the process repeated. In case of unusual scatter in the data the

procedure was repeated on another sample. The times were conveniently recorded and totaled on paper tape with a small adding machine.

Ordinarily the mean value of all times was computed, and the mobility m in μ/sec/v/cm was calculated by

$$m = \frac{L}{t}\left(\frac{KA}{I}\right),$$

where L is the distance in microns traveled in the average time t in seconds. The expression in parentheses is the reciprocal of the field strength, where I is the current in amperes, A is the cross-sectional area of the electrophoresis cell in square centimeters, and K is the specific conductance of the suspending medium used. The latter was measured at 25.0°C in a dipping conductivity cell at a frequency of 1000 cps using a conductivity bridge (Industrial Instruments Co., Model RC-18). The computation of the mobility from the average of the excursion times is not identical with the true mean of the mobility computed for each time. It is a more convenient procedure, however, and the difference is usually insignificant. Where the data were unusually scattered, individual mobilities were averaged.

ELECTROPHORESIS RESULTS

Errors and Reproducibility

The errors involved in microelectrophoresis measurements have been discussed in detail elsewhere (18-21). An experienced operator can expect a random error by the method used in our experiments to be in the range of 1 to 2%. Apart from this inherent error the mobilities of the microorganisms also vary. Error from this source can only be minimized by making a sufficient number of replicate measurements (usually 20 in our investigations). Occasionally, with some Gram-negative organisms, in particular, it was impossible to obtain a culture with sufficiently uniform mobilities to permit meaningful measurements, even after selecting inocula from single colonies on a spread agar plate. Although this observation of greatly diverse mobilities in otherwise apparently homogeneous cultures presents an interesting problem for investigation, we have confined our attention here to organisms which show relatively homogeneous electrophoretic behavior. A typical histogram for the mobilities of 40 *Escherichia coli* cells is plotted in Fig. 6. The distribution is unimodal and approximates a normal frequency distribution. The standard deviation is 0.19 μ/sec/v/cm, the coefficient of variation is 4.8%, and the standard error of the mean is 0.03. In general, these results may be taken as representative of the experiments reported here.

Mobility Variations with Culture Age

In these preliminary studies we confined our attention to microorganisms whose mobilities were as reproducible as possible. Two important variables are the culture age and the growth conditions (growth medium, pH, temperature, etc.). Examples of microorganisms whose electrophoretic behavior changes with these variables are common (20), but it is usually not difficult to select typical organisms whose mobility behavior is fixed over considerable variation in age and growth conditions. Mobility curves of mobility versus the age of the culture are shown in Figs. 7 and 8 for a Gram-negative and a Gram-positive organism, respectively. No significant changes in mobility were noted during the growth cycle (described by the turbidity curve). Similarly, no significant changes in mobility were observed when different complex media were used. An extensive investigation of the effects of different synthetic media, growth temperatures, or pH has not

appeared advisable in the early phases of this investigation. Instead these variables have been chosen mainly to give rapid growth rates and high yields.

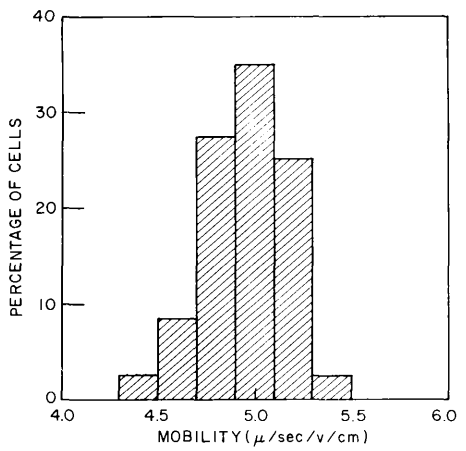

Fig. 6 - A histogram of the mobilities of Escherichia coli (strain Crookes) in 0.01M NaCl, pH 6.8

Effect of Substances Leached from Glass on Microbial Mobilities

Glass surfaces are inevitably present in all of the usual phases of microbial growth, harvesting, washing, and mobility determinations. It is known that glass is not the inert material usually assumed in such operations; in the presence of water it is subject to erosion and leaching of alkaline metal oxides and silica (22). The amounts of such material which are released are admittedly small but, if concentrated at the microbe/liquid interface, might easily be significant enough to affect the electrophoretic result. In addition, the contact of microbial cells with glass containers may remove constituents from their surfaces. Such interactions are known to occur with certain blood cells (23). Since no instances are known in which the effects of exposure to glass on the electrophoretic mobilities of microorganisms have been investigated, we considered it worthwhile to carry out a few exploratory experiments.

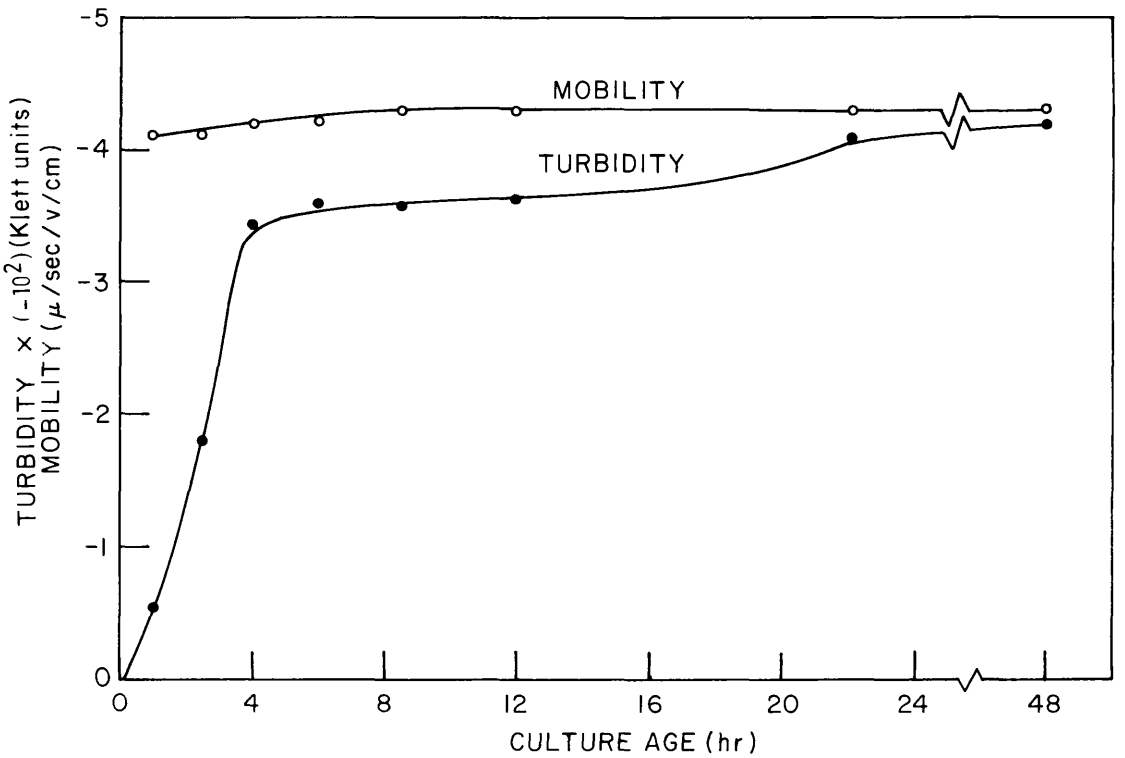

Fig. 7 - The mobility of Escherichia coli (strain Crookes) in 0.01M NaCl, pH 7.0, as a function of the age of the culture measured by suspension turbidity

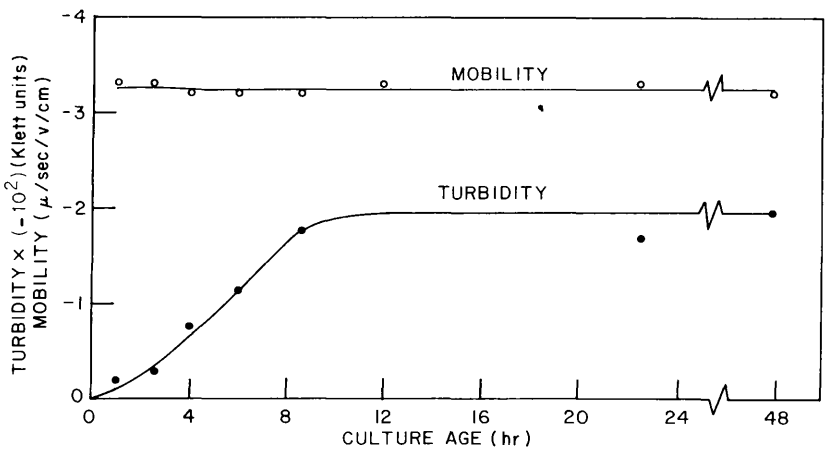

Fig. 8 - The mobility of Bacillus subtilis (var. niger) in 0.01M NaCl, pH 7.0, as a function of age of the culture measured by suspension turbidity

An *Escherichia coli* (ATCC 8739) inoculum was transferred into a synthetic medium (M-9 in Ref. 24) made up from reagent-grade salts and glucose contained in a polypropylene tube. This tube, as well as the subsequently used plastic containers, was cleaned with a mixture of equal volumes of concentrated HNO_3 and H_2SO_4 and thoroughly washed with water. "Glass-free" water for growth media and all other operations was obtained from a special still equipped with a polyethylene condenser (25). A loop of suspension (0.03 ml) was transferred on two successive days to polypropylene tubes containing 5 ml of fresh media and grown at 37°C. After overnight growth in the final tube, 2 ml of suspension were used to inoculate 185 ml of fresh medium in a polyethylene flask and incubated on a rotary shaker overnight. The culture was harvested, and half was washed twice in 0.02M sodium acetate and the other half in 0.02M NaCl, using polypropylene tubes in both cases. Mobility measurements using an all-Lucite cell (Fig. 2) were made in these media and compared with the results on cells grown in the same way but in standard glass apparatus and with water from a laboratory supply. The results are shown in Table 1. The differences in the mobilities of cells grown in a glass-free environment are not significantly different from the controls.

Table 1
The Effect of Glass-Free Suspension Media on the Electrophoresis of *Escherichia coli* Cells (Strain K-12)

Medium	Electrophoresis Chamber	Transit Time (sec)	
		With Glass	Glass-Free
0.02M sodium acetate, pH 5.7	Plastic	6.80	7.30
0.02M NaCl, pH 9.0	Plastic	10.33	10.32
0.02M sodium acetate, pH 6.0	Glass	8.27	8.24

To further substantiate the innocuousness of material solubilized from glass an additional experiment was done in media to which the eluates of glass surfaces were deliberately added. Cultures of *Escherichia coli* (K-12 and ATCC 8739) were washed in 0.02M NaCl and then washed once and resuspended in each of the following media for mobility determination:

1. 0.02M NaCl made up with glass-free distilled water.

2. A solution made from a few milliliters of concentrated NaOH in contact with a Pyrex flask surface for 1 day, neutralized with standard HCl, and made up to 0.02M NaCl (pH 7.0).

3. A solution similar to 2 except that eluate from a soft glass bottle was used.

4. A solution made by dissolving a small amount of colloidal silica (Cab-O-Sil) in concentrated NaOH, neutralizing with standard HCl, and diluting to 0.02M NaCl (pH 7.0).

Silica analyses were made on the final NaCl solutions (26). The results are shown in Table 2.

Table 2
The Effect of Material Leached from Glass on the Electrophoretic Mobility of Bacteria Suspended in 0.02M NaCl, pH 7.0

Source of Leached Material	Concentration of Silica (ppm as SiO_2)	Electrophoretic Mobility (μ/sec/v/cm)	
		E. coli (strain K-12)	*E. coli* (strain Crookes)
None (control)	<0.06	3.01	2.46
Pyrex	1.5	2.99	2.44
Soft glass	1.5	2.98	2.38
Colloidal silica (Cab-O-Sil)	6.4	3.09	2.57

Mobilities of Microbial Cells and Isolated Cell Walls

The growth conditions for the organisms used here and the method of preparing their isolated cell walls have been described in detail in a previous report (27). In brief, bacterial cells were grown in 4- to 5-l batches in a mass culture apparatus (28) or occasionally in flasks on a rotary shaker. Commercially available yeast cells (*Saccharomyces cerevisiae*) were used. Harvested cells were washed and ruptured by shaking with small glass beads on a cell homogenizer (Braun-Bronwill), thoroughly washed, and freed from unruptured cells and debris by density-gradient centrifugation. Cell-wall purity was established by light and electron microscopy and by examination of acid extracts for non-wall constituents absorbing in the ultraviolet. No enzyme treatments were used. Generally, the walls so prepared have a small tear or hole at one point in the case of cocci or short rods or a missing end in the case of the long rods (27). In the light microscope they appear to have about the same shape as the intact cells from whence they came. Small fragments of walls were not present in significant amounts.

The electrophoretic mobilities were determined on 20 individual cells or cell walls (ten at each stationary level) after at least three washes in the chosen medium. Measurements at the extremes of pH were followed by control determinations at neutral pH to learn whether any irreversible changes in the surfaces had occurred.

The buffer routinely used in the suspension media used for electrophoresis was prepared from barbital sodium, sodium acetate, and HCl (29) to give an ionic strength of 0.001. NaCl or other salts were added to give the desired final ionic strength. All stock

solutions were passed through Millipore filters (HA, 0.45 μ) before use to remove insoluble material. On numerous occasions the mobilities of the organisms obtained in buffered solutions were checked in buffer-free NaCl adjusted to the same ionic strength and to the same pH with HCl or NaOH. The results were the same in all cases. It follows that surface-charge anomalies due to the adsorption of barbiturate ions can be ruled out.

The pH-mobility curves are shown in Figs. 9 through 13. In the pH regions indicated by the dashed lines irreversible changes in the surface properties of the organisms occurred. Such changes were revealed by the fact that the control mobility at neutral pH was not reproduced after the organisms had been exposed to solutions with these pH values.

Ionic strength-mobility curves obtained with NaCl as the principal electrolyte are presented in Figs. 14 through 18. Similar data were also obtained using NaI and NaSCN to evaluate the effect of highly adsorbable anions (Table 3).

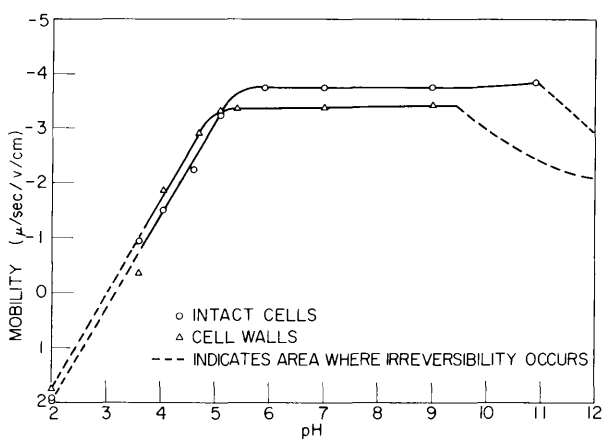

Fig. 9 - Mobility-pH behavior for Escherichia coli (strain K-12) in Veronal-NaCl solutions of ionic strength 0.01

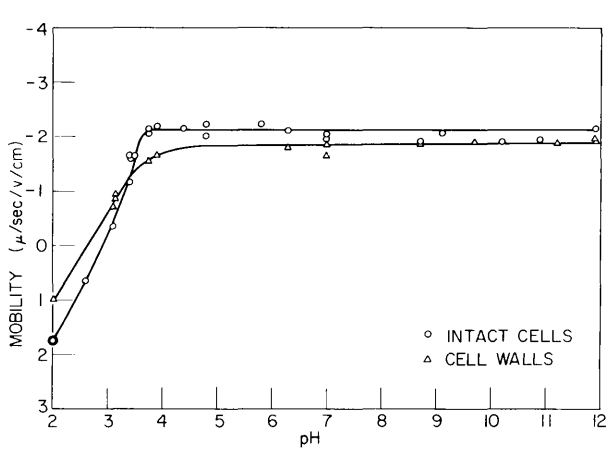

Fig. 10 - Mobility-pH behavior for Micrococcus lysodeikticus in Veronal-NaCl solutions of ionic strength 0.01

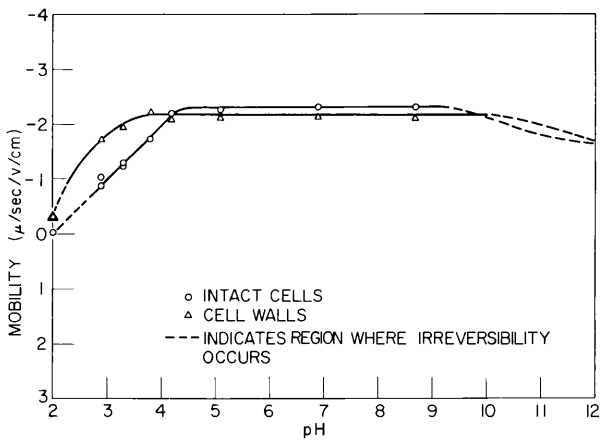

Fig. 11 - Mobility-pH behavior for Bacillus megaterium (strain KM) in Veronal-NaCl solutions of ionic strength 0.01

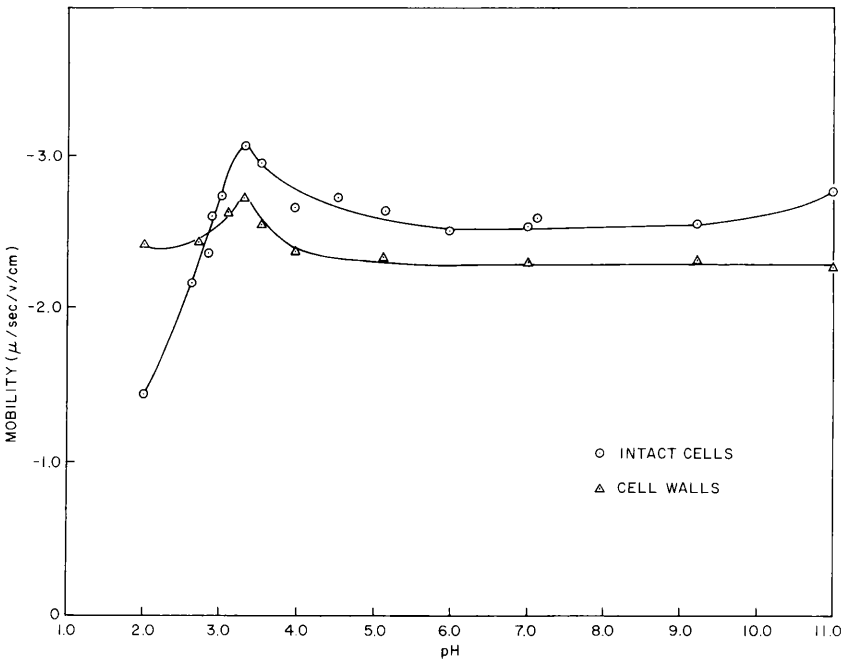

Fig. 12 - Mobility-pH behavior for Bacillus subtilis var. niger in Veronal-NaCl solutions of ionic strength 0.01

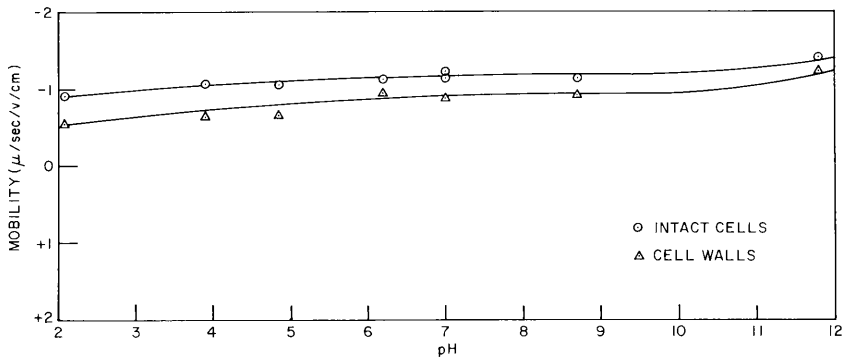

Fig. 13 - Mobility-pH behavior for Saccharomyces cerevisiae in Veronal-NaCl solutions of ionic strength 0.01

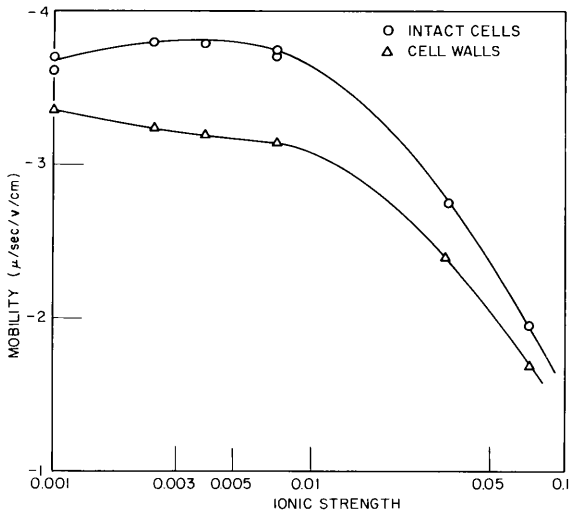

Fig. 14 - Mobility-ionic strength behavior for Escherichia coli (strain K-12) in Veronal-NaCl solutions of pH 7.0

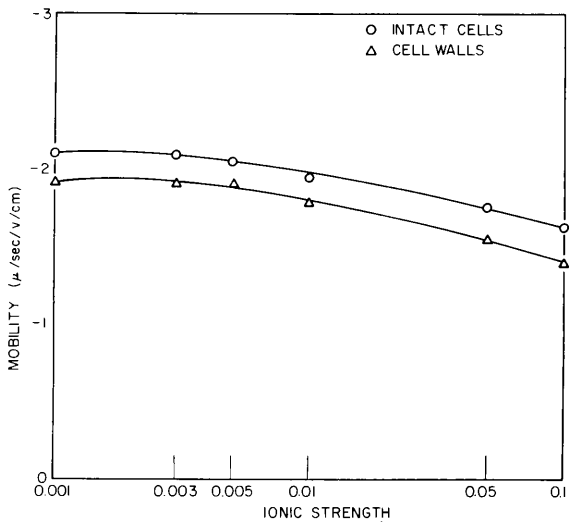

Fig. 15 - Mobility-ionic strength behavior for Micrococcus lysodeikticus in Veronal-NaCl solutions of pH 7.0

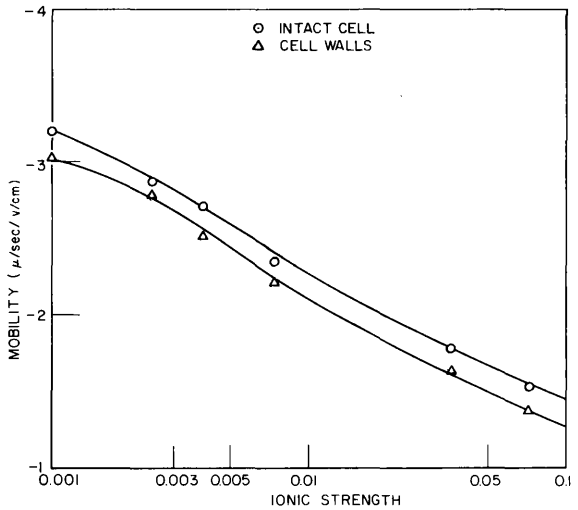

Fig. 16 - Mobility-ionic strength behavior for Bacillus megaterium (strain KM) in Veronal-NaCl solutions of pH 7.0

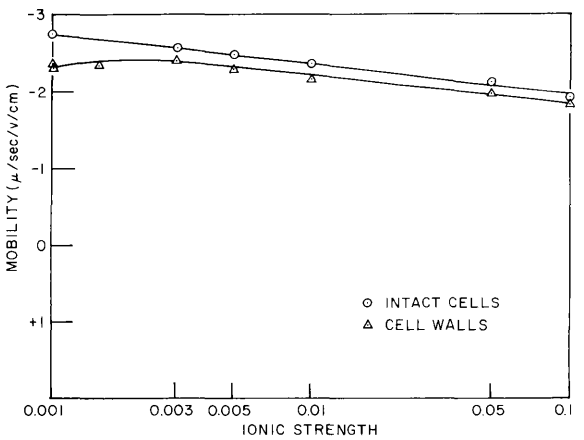

Fig. 17 - Mobility-ionic strength behavior for Bacillus subtilis var. niger in Veronal-NaCl solutions of pH 7.0

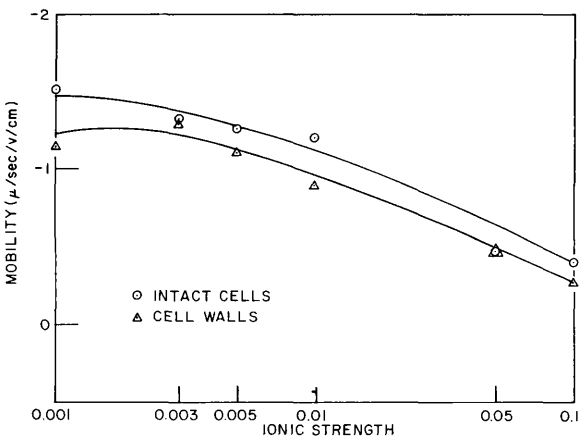

Fig. 18 - Mobility-ionic strength behavior for Saccharomyces cerevisiae in Veronal-NaCl solutions of pH 7.0

Table 3
The Electrophoretic Mobilities (μ/sec/v/cm) of Isolated Bacterial Cell Walls with Varying Ionic Strengths of Different Sodium Salts. (The pH is maintained at 7.0 with 0.001M Veronal Buffer and HCl.)

Microorganism	Electrolyte	Ionic Strength			
		0.01	0.05	0.1	0.2
Escherichia coli (K-12)	NaCl	3.2	2.1	1.55	1.0
	NaI	3.35	2.04	1.55	1.08
	NaSCN	3.0	2.09	1.61	1.08
Micrococcus lysodeikticus	NaCl	1.79	1.55	1.39	1.25
	NaI	1.92	1.52	1.39	1.20
	NaSCN	1.99	1.55	1.39	1.25
Bacillus megaterium	NaCl	2.1	1.5	1.27	1.2
	NaI	2.1	1.55	1.32	—
	NaSCN	2.05	1.55	1.35	—
Bacillus subtilus	NaCl	2.16	2.0	1.81	1.7
	NaI	2.31	2.0	1.90	1.69
	NaSCN	2.40	1.98	1.84	1.65
Saccharomyces cerevisiae	NaCl	0.9	0.47	0.26	—
	NaSCN	0.95	0.44	0.23	—

DISCUSSION

For microelectrophoresis palladium-hydrogen electrodes have the following advantages over other electrode systems:

1. Electrodes only a few square centimeters in area permit currents of any magnitude likely to be needed in microelectrophoretic studies without gas evolution which causes convective flow disturbances in the observation chamber and thereby falsifies particle velocity measurements. Thus, electrophoretic measurements need not be restricted to low ionic strengths as they are with platinum electrodes.

2. There is no need to isolate the electrode compartments with the troublesome porous plugs usually used with reversible electrode systems to prevent mixing of heavy metal ions (copper, zinc, silver, etc.) with the suspension in the observation chamber. Flushing out the palladium electrode compartments between each set of velocity determinations is sufficient to prevent any interference of electrode reaction products (hydroxyl, hydronium, or traces of palladium ions) with the electrokinetic behavior of the particles under study.

3. The electrodes are simple to construct and use. The only maintenance required is a brief daily electrolytic charging with hydrogen and an occasional anodic cleaning.

In brief, the palladium-hydrogen electrode system eliminates many of the difficulties which new users of electrophoresis equipment have but rarely report (19a,30).

It is obvious that the palladium-hydrogen electrode system could be adapted to any form of microelectrophoresis observation chamber. However, a laterally oriented flat

chamber has definite advantages over others for our work (31). Clear, undistorted images are readily obtained and phase-contrast optics can easily be used. This is important when studying small particles, such as bacteria, or poorly visible ones, such as isolated microbial cell walls. With cylindrical chambers images are distorted and focusing corrections are necessary because of a cylindrical lens effect (32,33) and an adaptation for phase contrast has not been possible thus far (34). The laterally oriented flat chamber is useful also for studying rapidly settling particles, since the electrophoretic velocity can be measured accurately as a horizontal velocity component in the presence of a considerable vertical movement due to gravity (31). The disturbing convection currents reported by some authors have not been apparent in our apparatus even with high currents. This is probably due to the good heat dissipation obtained by immersing the apparatus in a constant-temperature water bath (19b).

To use an apparatus with a flat observation chamber as an absolute instrument for measuring mobilities it is essential that the walls be planar and parallel. Although the importance of this matter was emphasized by early investigators (35), it has been neglected by some commercial fabricators in recent years. With a precision-made chamber there is no difficulty in obtaining the accepted mobility value for erythrocytes, and the questionable calibration methods used by some investigators are rendered unnecessary.

A final important consideration in fabricating a satisfactory flat chamber is the nature of the interior surfaces of the two sides. If these are not identical, the electroosmotic flows along them are likely to be unequal, and the velocity values at the front and back levels will differ. In principle, the correct mobility is obtained by averaging the results at both levels (36); in our experience this holds true only if the differences are not too large ($<25\%$). The differences can be minimized by using the same batch of glass for the front and back faces and treating them identically. It is still rare that the differences remain completely eliminated over long periods of use. Other materials might be superior to glass for chamber construction. Quartz, being a purer material, would be worth an evaluation. Our experience with a methyl methacrylate plastic chamber, although not extensive, indicated very uniform velocity readings at the two stationary levels. Differences in velocity readings at the two levels could be reduced by increasing the depth of the chamber. In our apparatus the depth could be increased to about 1 mm without exceeding the working distance of the microscope objective.

It should not be assumed that cylindrical chambers necessarily give more uniform flow conditions because they are made from one piece of glass (34). Usually there is no regular experimental check on this, because measurements are made only at the front stationary level. The correct mobility may be obtained for a test particle under conditions of neutral pH and high ionic strength, but this does not insure that asymmetric electroosmotic flows are absent at low ionic strengths or in nonneutral solutions. Inhomogeneities may exist in the glass surfaces, or the settling of particles on the bottom of the chamber could produce enough change in the charge properties of the surface to distort the normal flow conditions at the stationary level. Using flat chambers one is at least always made aware of the presence of asymmetries, because measurements must always be made at both front and back levels.

Electrophoresis is a sensitive tool for detecting differences in the surface properties of a population of microbial cells. Heterogeneous mobilities are frequently noted among cells which appear uniform by other criteria, such as size, shape, and colonial appearance. In view of this and the variety of complex materials found on cell surfaces it is surprising that homogeneous and reproducible mobilities can ever be obtained. However, pure strains of typical organisms do have uniform behavior as shown by Fig. 6. It is this fact and the further observation that surfaces of different composition have different electrical charge characteristics that make electrophoresis a useful tool in this field.

From the experimental point of view it is helpful to know that the electrophoretic behavior of microorganisms is not sensitive to trace contamination from ordinary glass containers (Tables 1 and 2).

The surfaces of all the microbial cells examined here are dominated by an electronegative charge. This is typical of nearly all organisms on which data are available (20). It is generally recognized that such a charge originates either from a surface adsorption of anions from the surrounding electrolyte or from the dissociation of negatively charged groups which are part of the surface structure of the particle. With the microbial cells examined here the adsorption of anions as a significant source of charge seems highly unlikely, because in all cases the mobilities in solutions containing the highly adsorbable anions, iodide and thiocyanate, are essentially the same as they are in chlorides or Veronal buffer (Table 3) (15). Information about the kind of groups which might dissociate to contribute a negative surface charge can be obtained from a comparison of the pH-mobility behavior with that of particles of known constitution (15,37,38). Thus, the surface of *Micrococcus lysodeikticus* and *Escherichia coli* appears to carry only carboxyl groups. With *Bacillus megaterium*, *Bacillus subtilis*, and *Saccharomyces cerevisiae* the negative charge persists down to a pH of 2 or less, where carboxyl groups would ordinarily not be ionized. This suggests the presence of a stronger acid group, such as mono- or diesters of phosphate. The mobility maximum observed in the acid region with *Bacillus subtilis* is unusual. James and Brewer (39), working with other species of organisms, have attributed this kind of behavior to a reversible rearrangement of an acidic phosphate polymer, teichoic acid, at the surface. Further studies of the origin of the negative charge on microbial surfaces will be presented in a subsequent report.

Inspection of the alkaline region of the pH-mobility curves of the organisms studied here indicates that positively charged amino groups are absent from their surfaces. The presence of such groups would be readily evident by an increase in mobility at about pH 9 or above as a result of the repression of their ionization and the consequent increase in net negative charge. This is in contrast to the observation that free amino groups are present in considerable numbers in the bulk structure of bacterial cell walls (40,41). This has been demonstrated in *Micrococcus lysodeikticus* walls in this laboratory by direct acid-base titrations (42). It must be concluded that there is a nonhomogeneous distribution of amino groups in the cell-wall structure. This interesting observation will be further considered in later reports.

A comparison of the electrophoretic behavior of microbial cells with their respective cell walls shows striking similarity. One must conclude that no drastic changes in surface properties have occurred as a result of the cell-wall isolation procedures. It can also be inferred that flagella, pili, or capsules could not have been important mobility determinants for the particular intact cells used here, because their almost certain removal during wall preparation would have resulted in greater mobility differences in some cases at least. Electron micrographs confirm the absence from intact cells of these easily removable surface features. Although motility was observed in some unwashed cultures of the *Escherichia coli* and *Bacillus subtilis* species, the flagella responsible probably were removed during the high-speed centrifugation used in the washing process.

The differences in electrophoretic behavior between the variety of intact bacterial cells studied and their respective cell walls, though small, are surprisingly constant. In neutral and alkaline solutions at all ionic strengths the mobility of walls is always slightly less than that of the corresponding cells. At low pH, on the other hand, the walls assume a higher mobility than the cells. The explanation for these results is not yet clear, but it appears probable that it is due to some common difference shared by all walls with respect to the intact cells rather than to a change in surface constitution. One such factor might be the lower conductivity of cell walls compared to the intact cells (40).

The only data which have appeared in the literature on the electrophoresis of isolated cell walls is that of Roberson and Schwab (43). They attempted to use the moving boundary method as a method of assessing the homogeneity of a streptococcal wall preparation. No fruitful comparisons can be made with the data presented in this report, because only one pH and one ionic strength were used, the walls were highly fragmented by ultrasonic treatment, and no mobilities on intact cells were obtained. Eddy and Rudin (44) have compared the microelectrophoretic behavior of intact cells and isolated walls of several yeast strains. Although the data were somewhat scattered, they demonstrated a general agreement between the mobilities of cells and walls and showed that phosphate groups were probably responsible for the negative charge carried by yeast cells at low pH.

Although further experimental work is required to elucidate the details of our findings, it seems reasonable to make the tentative conclusion that studies on the surface properties of isolated cell walls can be considered valid for intact cells. Thus, walls might be used in studies involving harsh chemical or physical treatments which would lyse intact cells. Walls might also be useful for the study of wall surfaces of pathogenic organisms where the use of intact living cells would be a hazard to the investigator.

REFERENCES

1. Ruhenstroth-Bauer, G., "Cell Electrophoresis," E.J. Ambrose, ed., Boston:Little and Brown, 1965

2. Neihof, R.A., "Electrophoretic Studies on Bacteria, Part 1 - Design and Performance of an Improved Apparatus for Electrophoresis by the Microscope Method," NRL Report 5495, Aug. 15, 1960

3. Neihof, R., and Schuldiner, S., Nature 185:526-527 (1960)

4. Douglas, H.W., Trans. Faraday Soc. 55:850-856 (1959)

5. Gittens, G.J., and James, A.M., Biochim. Biophys. Acta 66:237-249 (1963)

6. James, A.M., "Cell Electrophoresis," E.J. Ambrose, ed., Boston:Little and Brown, 1965

7. Madeley, J.R., Korngold, R.R., Kushner, D.J., and Gibbons, N.E., Can. J. Microbiol. 13:45-55 (1967)

8. Cornish, R.J., Proc. Roy. Soc., Ser A, 120:697 (1928)

9. White, P., Phil. Mag. 23:811-823 (1937)

10. Bangham, A.D., Flemans, R., Heard, D.H., and Seaman, G.V.F., Nature 182:642-644 (1958)

11. Hoare, J.P., and Schuldiner, S., J. Electrochem. Soc. 102:485 (1955)

12. Morrison, G.H., and Freiser, H., "Solvent Extraction in Analytical Chemistry," New York:Wiley (1957)

13. Feigl, F., "Spot Tests in Inorganic Analyses," 5th ed., Amsterdam:Elsevier (1958)

14. Douglas, H.W., and Parker, F., Trans. Faraday Soc. 53:1494-1499 (1957)

15. Davies, J.T., Haydon, D.A., and Rideal, E., Proc. Roy. Soc. B145:375-383 (1956)

16. Proctor, C.M., Anal. Chem. 28:2032-2034 (1956)

17. Komagata, S., Res. Electrotech. Lab. (Tokyo), No. 348 (1933)

18. Lerche, C., Acta Pathol. Microbiol. Scand. (Suppl.) 98:1-194 (1953)

19. Brody, O.V., "Microelectrophoretic Studies on Human Erythrocytes," Ph.D. Thesis, Harvard, 1954

    a. p. 26
    b. p. 27

20. James, A.M., Progr. Biophys. Chem. 8:96-142 (1957)

21. Brinton, C.C., Jr., and Lauffer, M.A., "Electrophoresis," M. Bier, ed., New York: Academic Press, p. 427, 1959

22. Holland, L., "The Properties of Glass Surfaces," New York:Wiley, 1964

23. Hampton, J.R., and Mitchell, J.R.A., Nature 209:470-472 (1966)

24. Roberts, R.B., Abelson, P.H., Cowie, D.W., Bolton, E.T., and Britten, R.J., "Studies on Biosynthesis in Escherichia Coli," Publication 607, Washington:Carnegie Institution of Washington, p. 5, 1955

25. Neihof, R.A., in preparation

26. Milton, R., J. Appl. Chem., Suppl. 1(No. 2):S126-S131 (1951)

27. Neihof, R.A., and Echols, W.H., "Biophysical Studies on Microbial Cell Walls, Part 1 - The Preparation of Isolated Cell Walls," NRL Report 6699, June 19, 1968

28. Echols, W.H., "An Aerobic-Bacteria Culture Apparatus Employing a New Foam-breaker," NRL Report 6494, Jan. 1967

29. Michaelis, L., Biochem. Z. 234:139 (1931)

30. Rottino, A., and Angers, J., "Cell Electrophoresis," E.J. Ambrose, ed., Boston: Little and Brown, p. 73, 1965

31. Hartman, R.S., Bateman, J.B., and Lauffer, M.A., Arch. Biochem. Biophys. 39:56-64 (1952)

32. Henry, D.C., J. Chem. Soc., 997-999 (1938)

33. Hall, E.S., Nature 203:1371-1372 (1964)

34. Seaman, G.V.F., "Cell Electrophoresis," E.J. Ambrose, ed., Boston:Little and Brown, p. 4, 1965

35. Abramson, H.A., "Electrokinetic Phenomena," New York:Chemical Catalog, 1934

36. Lane, T.B., and White, P., Phil. Mag. 23:824-828 (1937)

37. Kruyt, H.R., ed., "Colloid Science," Vol. 2, Amsterdam:Elsevier, 1949

38. Douglas, H.W., and Shaw, D.J., Trans. Faraday Soc. 53:512-522 (1957)

39. James, A.M., and Brewer, J.E., Biochem. J. 107:817 (1968)

40. Carstensen, E.L., and Marquis, R.E., Biophys. J. 8:536-548 (1968)

41. Marquis, R.E., J. Bacteriol. 95:775-781 (1968)

42. Echols, W.H., and Neihof, R.A., Bacteriol. Proc., 58 (1968)

43. Roberson, B.S., and Schwab, J.H., Biochem. Biophys. Acta 44:436-444 (1960)

44. Eddy, A.A., and Rudin, A.D., Proc. Roy. Soc., Ser. B, 148:419-432 (1958)

This page intentionally left blank.

Security Classification

DOCUMENT CONTROL DATA - R & D

(Security classification of title, body of abstract and indexing annotation must be entered when the overall report is classified)

1. ORIGINATING ACTIVITY *(Corporate author)*

Naval Research Laboratory
Washington, D.C. 20390

2a. REPORT SECURITY CLASSIFICATION

UNCLASSIFIED

2b. GROUP

3. REPORT TITLE

BIOPHYSICAL STUDIES OF MICROBIAL CELL WALLS, PART 2 - ELECTROPHORESIS: APPARATUS AND EXPLORATORY EXPERIMENTS

4. DESCRIPTIVE NOTES *(Type of report and inclusive dates)*

Interim report; work is continuing on the problem.

5. AUTHOR(S) *(First name, middle initial, last name)*

R.A. Neihof and W.H. Echols

6. REPORT DATE

November 15, 1968

7a. TOTAL NO. OF PAGES

26

7b. NO. OF REFS

44

8a. CONTRACT OR GRANT NO.

NRL Problem C05-21

b. PROJECT NO.

RR 001-01-43-4757

c.

d.

9a. ORIGINATOR'S REPORT NUMBER(S)

NRL Report 6795

9b. OTHER REPORT NO(S) *(Any other numbers that may be assigned this report)*

10. DISTRIBUTION STATEMENT

This document has been approved for public release and sale; its distribution is unlimited.

11. SUPPLEMENTARY NOTES

12. SPONSORING MILITARY ACTIVITY

Department of the Navy
(Office of Naval Research),
Washington, D.C. 20360

13. ABSTRACT

Electrophoresis is one of the few physicochemical methods available for the quantitative study of the nature of microbial cell surfaces. Microelectrophoretic apparatus suitable for work with both intact cells and their isolated cell walls has been constructed. Distinguishing features of the system are palladium-hydrogen electrodes, a precision-built flat observation chamber, phase contrast optics, and a water bath for the rapid dissipation of ohmic heat and maintenance of a defined temperature. The electrophoretic mobilities of selected organisms were reproducible, homogeneous, and insensitive to the presence of substances leached from glass vessels. The surfaces of the microbes chosen for this investigation were dominated by electronegative charges derived most probably from carboxyl and phosphate groups. The adsorption of anions from the suspending media made an insignificant contribution to the charge. Amino groups appeared to be entirely absent. The mobilities of isolated cell walls under varying conditions of pH and ionic strength were very similar to those of the corresponding intact cells. Thus, studies on isolated cell walls can provide a valid way of characterizing the wall surface which is especially useful under conditions where the intact cells are likely to be lysed or are pathogenic. Further work is necessary to characterize more completely the density and nature of the negatively charged surface groups and to explain the absence of surface amino groups and the small but consistent mobility differences between intact cells and their corresponding cell walls.

DD FORM 1 NOV 65 1473 (PAGE 1)

S/N 0101-807-6801

Security Classification

Security Classification

14. KEY WORDS	LINK A ROLE	LINK A WT	LINK B ROLE	LINK B WT	LINK C ROLE	LINK C WT
Cell walls						
Electrophoresis						
Microelectrophoresis						
Bacteria						
Palladium electrodes						
Microorganisms						
Surface properties						
Electrokinetics						

DD FORM 1 NOV 65 1473 (BACK)
(PAGE 2)

Security Classification