NRL Report 6764

The Waveguide Tunnel-Diode Amplifier

Design Considerations

J. J. Ayoub, Jr.

Microwave Antennas and Components Branch
Electronics Division

November 12, 1968

NAVAL RESEARCH LABORATORY
Washington, D.C.

This document has been approved for public release and sale; its distribution is unlimited.

CONTENTS

Abstract	ii
Problem Status	ii
Authorization	ii
INTRODUCTION	1
THEORY OF THE TUNNEL-DIODE REFLECTION AMPLIFIER	1
DESIGN OF THE TUNNEL-DIODE AMPLIFIER	3
The Tunnel-Diode Equivalent Circuit	3
Waveguide Admittance	4
Tuning the Tunnel Diode	4
Stability	5
APPROXIMATE DESIGN PROCEDURE	7
EXPERIMENTAL STUDY	7
Selection of Tunnel Diodes	8
Tunnel-Diode Mounting and Biasing Structure	9
Realization of G_L	10
Experimental Results	11
DISCUSSION	13
SUMMARY	15
REFERENCES	16

ABSTRACT

An analytic design procedure for waveguide tunnel diode amplifiers based on the use of commercially available packaged tunnel diodes and the manufacturer furnished specifications for these devices is outlined. This approach is found to be inadequate for the realization of an amplifier that must meet specified performance criteria. However, the waveguide structure resulting from this design procedure should be suitable for performing microwave frequency measurements that will allow a more complete characterization of the waveguide tunnel diode network and therefore a more exact design procedure.

The extreme fragility of high resistive cutoff frequency tunnel diodes requires that extreme care be used in the mounting and biasing of these devices. Pressure- and shock-absorbing devices should be used in the mounting structure to avoid destruction of the tunnel diode. It is concluded that the realization of tunnel diode amplifiers for frequencies above 26 GHz will necessitate new packaging techniques and possibly even new fabrication techniques for the tunnel diode itself.

PROBLEM STATUS

This is an interim report; work continues on other phases of the problem.

AUTHORIZATION

NRL Problem 52R01-42
Project RR 008-05-41-5701

Manuscript submitted June 24, 1968.

THE WAVEGUIDE TUNNEL-DIODE AMPLIFIER

INTRODUCTION

The use of the tunnel diode as a relatively simple means of obtaining low-noise microwave amplification is well established. Low-noise tunnel-diode amplifiers are commercially available for operation at frequencies as high as 20 GHz. However, the majority of the tunnel diode amplifiers available are built into TEM-mode transmission lines such as coax or stripline. Microwave devices for use at frequencies above 26 GHz are best realized in waveguide if optimum performance is to be attained. Successful waveguide operation of a tunnel-diode amplifier has been demonstrated at 85 GHz (1), though little has been done since to fully exploit the tunnel diode in the region above 26 GHz. Furthermore, little information has been disclosed concerning design procedures and problems encountered with waveguide tunnel-diode amplifiers. These subjects are the main concern of this report.

A straightforward analytic approach to the design of a waveguide circulator-coupled, tunnel-diode reflection amplifier will be outlined. The use of commerical, packaged tunnel diodes will be considered, the physical and electrical problems will be discussed, and experimental results will be described.

THEORY OF THE TUNNEL-DIODE REFLECTION AMPLIFIER

A circulator-coupled tunnel-diode reflection amplifier is shown in Fig. 1. Signals entering Port 1 travel to Port 2, which is terminated by a properly biased tunnel diode exhibiting a negative resistance. The negative resistance causes an increase in the power of the reflected signal which then emerges from Port 3. The circulator is necessary since the tunnel diode is a single-port device, and external means must be provided to separate the input and output signals. The circulator also aids stability by maintaining a constant impedance load on the tunnel diode.

A simple shunt-tuned reflection amplifier can be represented by a transmission line terminated at one end by a load admittance equal to the characteristic admittance of the line and terminated at the other end by a tunnel diode and its tuning elements as shown in Fig. 2.

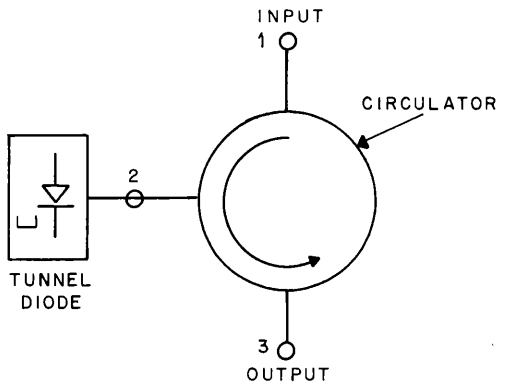

Fig. 1 - Circulator-coupled tunnel-diode reflection amplifier

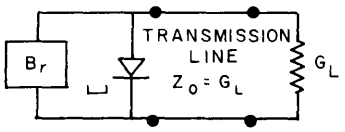

Fig. 2 - Simplified representation of tunnel-diode reflection amplifier

The power gain of a reflection amplifier is given by

$$PG = |\Gamma|^2 = \left|\frac{Y_0 - Y_{TD}}{Y_0 + Y_{TD}}\right|^2 , \tag{1}$$

where Γ is the reflection coefficient, Y_0 is the characteristic admittance of the transmission line, and Y_{TD} is the total admittance of the tunnel diode and tuning element. The admittance of the circulator is equal to the characteristic admittance of the transmission line in the passband of the circulator.

Y_0 is real for frequencies above the waveguide cutoff frequency and can be represented as a conductance G_L. If the tunnel diode is parallel resonated, its admittance becomes G_{TD}. G_{TD} is negative for frequencies below the resistive cutoff frequency f_{ro}* of the tunnel diode. Now the expression for gain can be written

$$PG_{\text{resonance}} = |\Gamma|^2 = \left|\frac{G_L + G_{TD}}{G_L - G_{TD}}\right|^2 . \tag{2}$$

For a given value of G_{TD}, the gain is a function of waveguide admittance.

The noise figure for the reflection amplifier described is given (2) by

$$NF = \frac{1 + K}{\left(1 - \frac{r_s}{|-R_j|}\right)\left[1 - \left(\frac{f}{f_{ro}}\right)^2\right]}, \tag{3}$$

where K is a constant dependent on the particular tunnel diode, r_s is the series resistance of the diode, $-R_j$ is the negative resistance of the diode, f is the frequency of operation, and f_{ro} is the resistive cutoff frequency for the diode; f_{ro} should be at least twice the operating frequency, f, to achieve a low noise figure.

---

*f_{ro} is that frequency where the real part of the tunnel diode impedance becomes zero and is given by

$$f_{ro} = \frac{1}{2\pi|-R_j|C_j}\sqrt{\frac{|-R_j|}{r_s} - 1}.$$

Below f_{ro} the real part of the impedance is negative, above f_{ro} it is positive.

This expression is completely valid only for the lossless, infinite-gain case of the tunnel-diode reflection amplifier. For most practical cases, its use is reasonably accurate in predicting noise figure for a practical amplifier.

DESIGN OF THE TUNNEL-DIODE AMPLIFIER

The design of microwave tunnel-diode amplifiers at any frequency and in any type of transmission line requires knowledge of the equivalent circuit of the tunnel diode, the realization of a suitable circuit and its elements, and a knowledge of the stability of the circuit. Various design techniques for TEM-mode transmission line tunnel-diode amplifiers are available; however, no comprehensive design technique is available for waveguide tunnel-diode amplifiers. In addition, there are problems encountered in the design of waveguide circuits which are not found in TEM-mode transmission line circuits. There are also problems which make operation at the higher microwave frequencies more difficult.

The Tunnel-Diode Equivalent Circuit

The generally accepted equivalent circuit for the tunnel diode when biased in the negative resistance region is shown in Fig. 3. The circuit element values are usually determined through low-frequency measurements and are supplied by the tunnel diode manufacturer. This form of the equivalent circuit is believed to be valid well into the microwave region. However, the values of the circuit elements become doubtful at microwave frequencies.

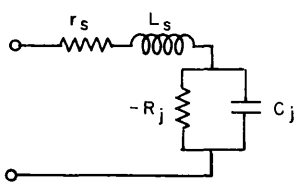

Fig. 3 - Tunnel diode equivalent circuit

A more exact representation of the tunnel diode at microwave frequencies can be obtained by making measurements at the frequencies of interest. A most useful method is to measure the microwave properties of the tunnel diode when it is mounted in the structure which will become part of the network. The characterization of devices, such as tunnel diodes, in waveguide structures has been the subject of several papers (3, 4). These papers also take into account the manner in which the diode is coupled to the waveguide. Although the techniques described in these papers have not been applied here, it would appear that such measurements would be of great benefit. However, it would also appear that realizing a suitable waveguide structure for measurement purposes would involve the identical problems to be described in this report.

As a first approximation for diode selection, application, and initial design, the parameters furnished by the manufacturer can be used.

Waveguide Admittance

Three expressions for waveguide characteristic admittance (5) are as follows:

$$Y_{vi} = \frac{2}{377\pi} \frac{a\lambda}{b\lambda_g} , \tag{4}$$

$$Y_{pv} = \frac{1}{754} \frac{a\lambda}{b\lambda_g} , \tag{5}$$

$$Y_{pi} = \frac{8}{377\pi^2} \frac{a\lambda}{b\lambda_g} . \tag{6}$$

where a is the waveguide width, b is the waveguide height, λ is the free-space wavelength, and λ_g is the waveguide wavelength.

These expressions differ by a numerical constant as a result of the basis for definition of each. Y_{vi} is based on a voltage-current definition, Y_{pv} on power-voltage, and Y_{pi} on power-current. Y_{pv} yields the smallest value of admittance for a given waveguide size and wavelength. It will be shown later that the use of Y_{pv} can be considered as a worst-case design when stability is considered. Furthermore, evidence is furnished in Refs. (3) and (4) that Y_{pv} is the correct expression to be used in any event.

Regardless of which definition is used, all three expressions result in a very small value of admittance for standard-height waveguide. The most practical means of increasing waveguide admittance to a value suitable for use with tunnel diodes is to reduce the height of the waveguide.

The transition between the standard-height and reduced-height waveguide can be accomplished through the use of a taper or a quarter-wave step transformer. The step transformer, though more difficult to fabricate than a taper, does provide a better match over a broader band in a much shorter length of waveguide.

Tuning the Tunnel Diode

It will be shown in a later section that a tunnel diode suitable for use as a microwave amplifier must have a reactive cutoff frequency f_{xo}* greater than the resistive cutoff frequency f_{ro}. Such a tunnel diode will exhibit an admittance $G_{TD} + jB_{TD}$, where B_{TD} is a capacitive susceptance. Therefore, an inductive susceptance is required in shunt with the tunnel diode to obtain resonance. This susceptance can be obtained by placing a short circuit behind the tunnel diode at a distance less than a quarter wavelength at the frequency of operation. The susceptance of such a shorted transmission line is given by

$$B = \frac{1}{\omega L} = Y_0 \cot \beta\ell, \quad \text{for } \ell < \frac{\lambda_g}{4} , \tag{7}$$

---

*f_{xo} is that frequency at which the imaginary part of the tunnel diode impedance is zero and is given by

$$f_{xo} = \frac{1}{2\pi} \sqrt{\frac{1}{L_s C_j} - \left(\frac{1}{|-R_j| C_j}\right)^2} .$$

Below f_{xo} it is capacitive, above f_{xo} it is inductive.

where

$$\beta = \frac{2\pi}{\lambda_g} . \tag{8}$$

The short can be varied in position to facilitate tuning.

Stability

The stability of any tunnel-diode circuit must be insured for all frequencies for which the tunnel diode exhibits a negative resistance. The stability analysis for a tunnel-diode circuit is usually separated into an analysis of bias-circuit stability and a separate analysis of rf-circuit stability. However, it is also necessary to insure the inherent stability of the tunnel diode itself if the circuit is to be kept simple and the use of stabilizing networks is to be avoided.

Inherent Tunnel-Diode Stability—A stability analysis of the tunnel-diode equivalent circuit shown in Fig. 3 reveals that the tunnel diode is a short-circuit, stable device subject to the conditions

$$|-R_j| > r_s > \frac{L_s}{|-R_j| C_j} \tag{9}$$

for stable operation. This criteria can also be interpreted to state that

$$|-R_j| > r_s \tag{10}$$

and

$$f_{xo} > f_{ro}, \tag{11}$$

where f_{xo} is the self-resonant frequency of the diode and f_{ro} is the resistive cutoff frequency of the diode. If f_{xo} is less than f_{ro}, then the tunnel diode will oscillate at f_{xo} and possibly at other frequencies because of violation of the condition

$$r_s > \frac{L_s}{|-R_j| C_j} . \tag{12}$$

If this condition is violated by a particular tunnel diode, it may be possible to stabilize the diode by adding an external resistance in series with the diode or by incorporating a stabilizing network of some sort. The addition of series resistance will reduce the resistive cutoff frequency f_{ro} to a value less than the reactive cutoff frequency f_{xo}, thus forcing the condition $f_{xo} > f_{ro}$. However, this technique is not desirable, because it introduces additional loss, reduces the frequency of operation for good noise performance, and furthermore is difficult to do in a waveguide circuit. The tunnel diode is mounted directly in the waveguide and, ideally, should be isolated from any external circuitry.

Bias Circuit Stability—The bias circuit for the tunnel diode is shown in Fig. 4. R_I is much greater than R_b and can thus be ignored. The stability conditions then require that

$$|-R_j| > (r_s + R_b) > \frac{(L_s + L_b)}{|-R_j| C_j} \tag{13}$$

(L_b should be kept as small as possible).

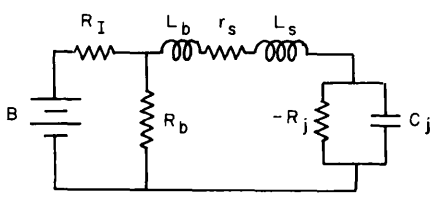

Fig. 4 - Bias circuit

RF Stability—The rf-equivalent circuit of the tunnel-diode reflection amplifier is shown in Fig. 5. The stability analysis of this circuit is quite complex and is usually carried out for a particular set of parameters. A Nyquist plot is ordinarily made to investigate stability. However, if the circuit is examined from another point of view, such as that in Fig. 6, a statement concerning stability for the general case can be made. For this circuit the requirements that (6)

$$Re\,[Y(\omega)] > |-G_j|, \quad \text{or}$$

if $\quad Re\,[Y(\omega)] \leq |-G_j|$

then $\quad Im\,[Y(\omega)] \neq 0$

are sufficient to insure stability. These conditions must be true for all frequencies up to the cutoff frequency f_{ro} of the tunnel diode.

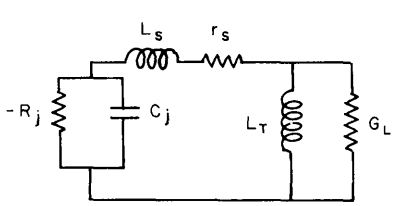

Fig. 5 - Rf equivalent circuit

The difficulties in insuring rf stability lie in the fact that G_L and L_T are frequency sensitive, and since the cutoff frequency of the tunnel diode is more than twice the frequency of operation, multiple resonance can occur in the circuit. The tuning circuit can be constructed so as to prevent multiple resonances by decreasing the admittance of the tuning circuit (by increasing guide height), and by moving the short closer to the tunnel diode, thus shortening the line length between the tunnel diode and the short.

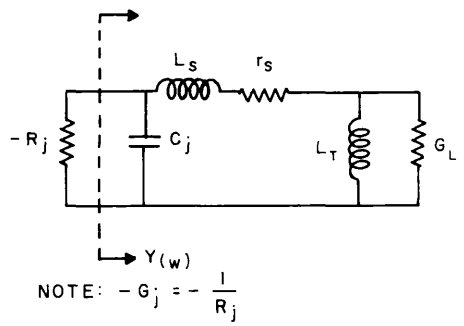

Fig. 6 - Rf equivalent circuit for stability analysis

APPROXIMATE DESIGN PROCEDURE

The analytic design of a tunnel-diode, circulator-coupled reflection amplifier based on the manufacturer's specifications for tunnel diodes proceeds as follows:

1. Select a tunnel diode, insuring that $f_{ro} > 2f$ and $f_{xo} > f_{ro}$.
2. Calculate $Y_{TD} = G_{TD} + jB_{TD}$ at the frequency of interest f.
3. Calculate G_L for the desired amount of gain from

$$|\Gamma|^2 = \left|\frac{G_L + G_{TD}}{G_L - G_{TD}}\right|^2$$

4. Investigate the stability of the complete rf circuit.
5. Design a transformer to get G_L.
6. Design a mounting and biasing structure. Insure bias-circuit stability.
7. Adjust the short to tune the tunnel diode.

EXPERIMENTAL STUDY

The major experimental study of waveguide tunnel-diode reflection amplifiers was conducted at X-band frequencies because of the availability of suitable commercial tunnel diodes.

One of the systems used to evaluate the tunnel-diode amplifiers is shown in Fig. 7. This system is used to evaluate the standard, circulator-coupled, reflection amplifier. The waveguide switches are used to bypass the amplifier, including the circulator and isolators, so that gain can be measured by comparing detector output with and without the amplifier in the circuit. The isolators are used to provide additional source and load isolation above that provided by the circulator. The circulator VSWR at the amplifier port is 1.11 or better over the frequency range of 8.2 to 9.5 GHz.

The second system used to test tunnel-diode reflection amplifiers is shown in Fig. 8. The signal is introduced to the tunnel-diode circuit through a directional coupler, and the reflected amplified signal is detected either through another directional coupler or at the end of the main line. This circuit does away with any mismatches other than those from the transformer section.

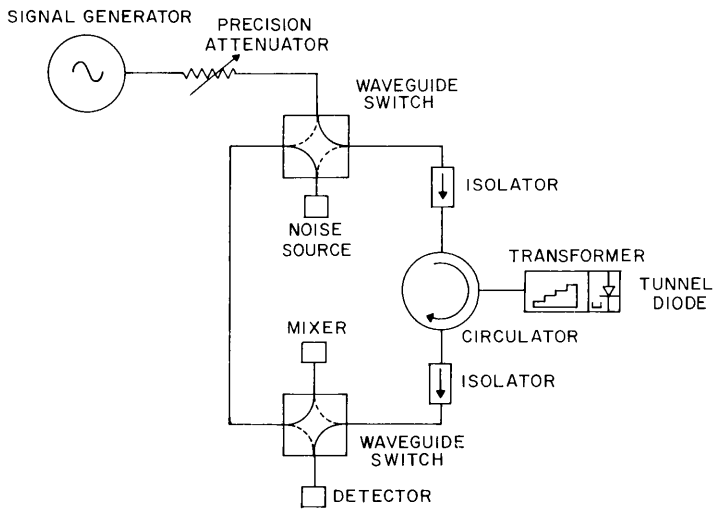

Fig. 7 - Gain-measuring system

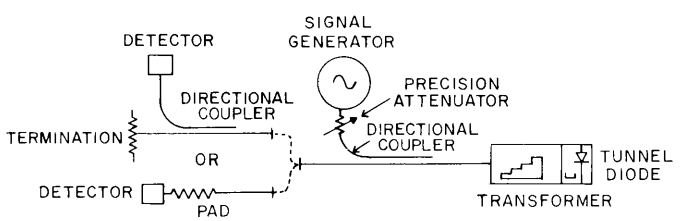

Fig. 8 - Alternate gain-measuring system

Selection of Tunnel Diodes

The choice of a suitable tunnel diode for amplifier operation at frequencies up to 20 GHz is not difficult. Tunnel diodes are commercially available with resistive cutoff frequencies in excess of 50 GHz, thus satisfying the requirement that $f_{ro} > 2f$ for good noise performance. The tunnel diode should also have a reactive cutoff frequency f_{xo} such that $f_{xo} > f_{ro}$. This requirement is highly dependent on the package used for the tunnel diode. Most tunnel diodes in the micropill package, Fig. 9, will satisfy this requirement for resistive cutoff frequencies up to about 50 GHz.

The factor K in the expression for the noise figure is a function of the diode material. Tunnel diodes made from gallium antimonide have the smallest K and are capable of the best noise figure. Germanium has a slightly greater K but is satisfactory for most applications. Gallium arsenide tunnel diodes have the poorest noise figure but have a wider dynamic range and greater power output capabilities.

Tunnel diodes with peak currents ranging from 1 to 2 milliamperes exhibit negative resistances ranging from approximately 130 to 40 ohms. These tunnel diodes are most easily used in microwave amplifiers, since the characteristic impedances of most transmission lines fall within this range.

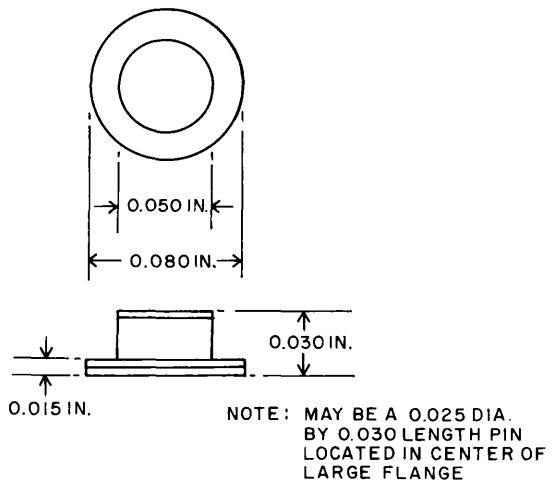

Fig. 9 - Micropill package

Germanium tunnel diodes from several manufacturers were used in this study. Resistive cutoff frequencies ranged from 20 to 45 GHz, and $|-R_j|$ ranged from 80 to 123 ohms. The diodes were all packaged in the micropill type of package. The entire analytical design was based on the specifications furnished by the manufacturers. The most doubtful parameter for the diodes was the series inductance L_s; thus a range of inductances from 0.2 to 0.05nH was used in analytic designs for each diode. A plot of G_{TD} versus frequency is shown in Fig. 10 for several diodes typical of those used. Based on these curves, a value of G_L to allow stable operation was determined.

Tunnel-Diode Mounting and Biasing Structure

The design of a mounting and biasing structure for the tunnel diode proved to be a particularly difficult problem. The structure must support a very fragile diode without damaging it, must provide a means for biasing the diode in a stable manner, and should isolate the bias circuit from the rf circuit as much as possible. Several different configurations were tested, but the one which appeared to perform best and was ultimately used in all further work is shown in Fig. 11.

The conically shaped contact is isolated from the remainder of the mount by a 0.0005- or 0.001-inch-thick piece of Mylar. The peak of the conical section is flush with the top waveguide wall and contacts the diode. A disk resistor is placed on the base of the conical section and is attached to the conical section by a screw. The outer diameter of the disk resistor is pressure contacted by the threaded piece which also holds the conical plug in place. The bias voltage is applied between the conical plug and ground.

On the other broad face of the waveguide, a hole is drilled through and the diode is inserted with the smaller-diameter contact against the conical plug. The diode is held in place by a metal cushion which protects the diode from damage due to mounting pressure and also connects the diode to ground.

Stability of the bias circuit is checked by inserting a shim in the reduced-height-waveguide portion of the mount so that the entire waveguide portion of the mount is filled except for a hole in the center of the shim which allows the tunnel diode to be inserted and biased in the normal manner. Since the tunnel diode is now isolated from the waveguide portion of the mount, it "sees" only the bias circuitry. The voltage-current characteristic of the tunnel diode is then examined to insure the absence of oscillation,

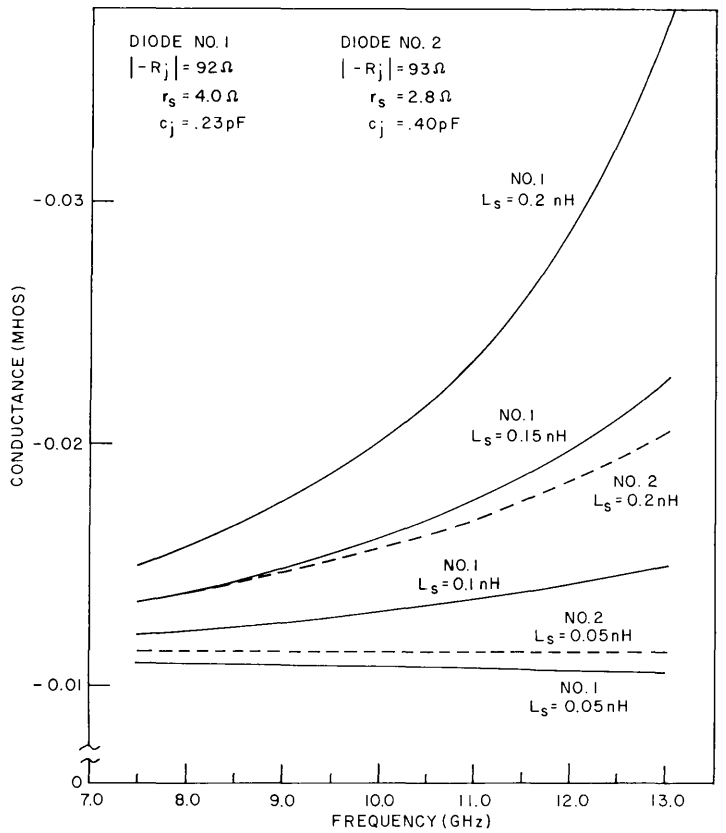

Fig. 10 - G_{TD} of several tunnel diodes for several different values of series inductance L_s

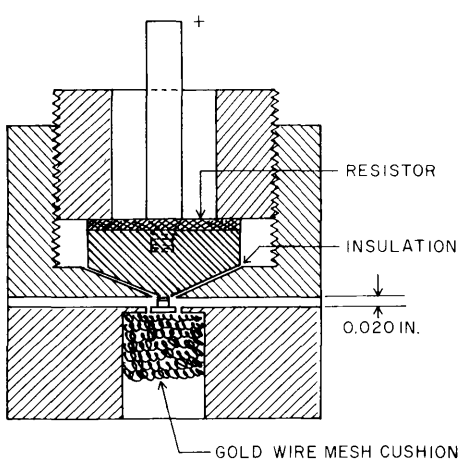

Fig. 11 - Tunnel-diode mounting and biasing structure (side section (simplified))

which if present, would be apparent by a distortion of the voltage-current curve in the negative resistance region.

Realization of G_L

It was determined that a reduced waveguide height of 0.020 inch would result in a value of admittance greater than the admittance of the tunnel diodes used in the study. This height is approximately the same height as the diodes and facilitates mounting the

diodes. This height was used throughout the experimental study with the intention to tailor it for gain only after the other problems had been solved. Figure 12 shows the admittance of the 0.020-inch-high X-band waveguide for each definition of admittance, Y_{pv}, Y_{pi}, and Y_{vi}.

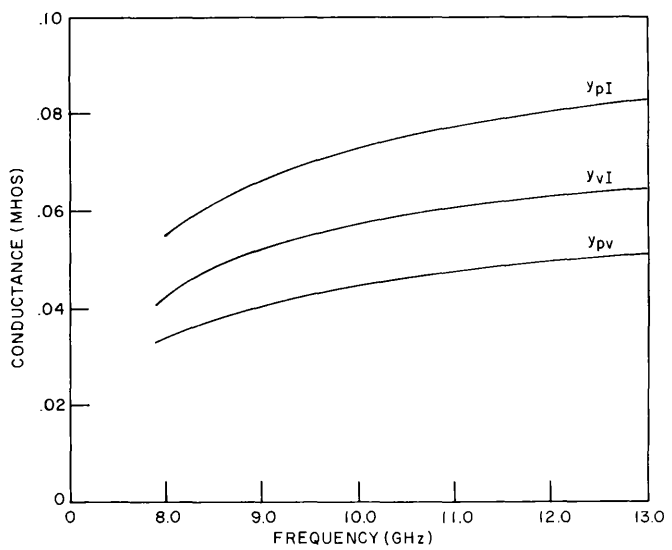

Fig. 12 - Admittance of 0.020-inch high X-band waveguide

Initially, linear tapers 2 to 3 wavelengths long were used to transform from standard-height waveguide to the reduced-height waveguide. However, use of these tapers resulted in relatively narrow bands of good match. Additional investigation indicated that tapers would become impractically long for good broadband match.

The use of quarter-wave step transformers was next considered. These would result in a much shorter transformer section than tapers, and furthermore, bandwidth and match could be tailored to needs. The design of the step transformers was based on tables and procedures found in Ref. 7. It was determined that for a 20-to-1 reduction in waveguide height, the use of a four-step transformer would result in a good match over a fairly broad band. However, the physical realization of the quarter-wave transformers turned out to be a problem. Difficulty was encountered in maintaining the dimensions of the steps, since the difference between step heights became very small. Initially the transformers were designed with steps only on one broad face of the waveguide. These transformers did not meet the predicted performance parameters. Transformers were then constructed with steps on both broad faces of the waveguide. These transformers came closest to meeting the desired performance. The VSWR of the best transformer is 1.1 or better over the frequency range of 8.2 to 9.8 GHz. A sketch of this transformer, with the tunnel diode mount attached, is shown in Fig. 13.

Experimental Results

Most tunnel diodes which satisfied the condition $f_{xo} > f_{ro}$, as computed from the manufacturer's specifications, were capable of stable operation in 0.020-inch-high waveguide. However, stability was very critically dependent on the position of the rf short circuit. Theoretically, the tunnel diode should be stable when in a short-circuited condition; therefore, the waveguide circuit should be stable when the short is as close as possible to the tunnel diode. Then, as the short is moved away from the tunnel diode, a position is found where instability should be noted. However, the circuit was unstable

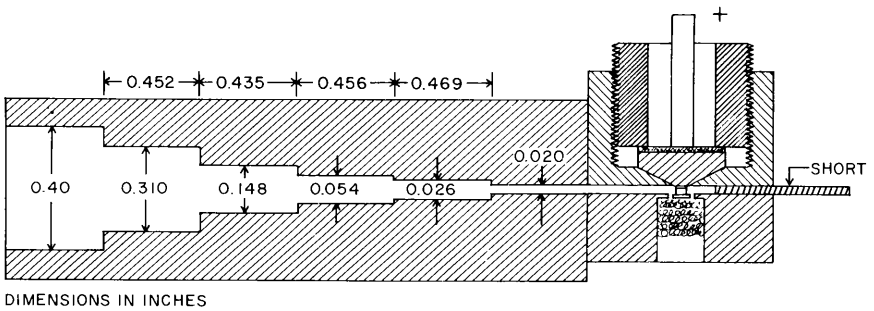

Fig. 13 - X-Band step transformer with tunnel-diode mount

if the short was either too close or too far from the tunnel diode. The position of the short for stability varied, of course, from diode to diode, but always the short had to be at some point away from the diode if stable operation were to be obtained. The range of the short adjustment about this point was very small and therefore limited the ranges over which the amplifier could be tuned.

It should be noted that a good variable short circuit in 0.020-inch-high waveguide is difficult to realize. For example, in reduced-height waveguide with a height of 0.020 inch, the obvious short is a piece of shim stock 0.020 inch or 0.019 inch thick. However, ensuring a low-resistance contact between the waveguide and the short is a problem. The shim stock can be slightly bent to provide a type of spring contact, but even this is not really enough to insure a good short. The electrical position of the short may vary in a fashion different from the physical variation of the short, and varying losses may also be introduced. Of course, any type of electrical choke type of short is virtually impossible to realize in the reduced-height waveguide. An alternate solution is to increase the height of the waveguide behind the tunnel diode and then use either spring fingers or a choke type of short. This has another advantage in that now for a given value of susceptance the short can be moved closer to the diode and thus reduce the chance of multiple resonances occurring.

When a stable short position was located, the possibility of achieving amplification was investigated. The X-band signal was varied in frequency until some sign of increased signal output was noted. A swept-frequency generator was used, and care was taken to prevent saturation of the tunnel diode. Amplification was noted with most of the diodes used. However, when tapers were used to provide the transition from standard-height waveguide to reduced-height waveguide, the frequency of amplification did not correspond to the frequency where good match of the taper had been noted. There was no way to predict the frequency of amplification or the amount of gain. Gains from 6 to 35 dB were noted with bandwidths ranging from approximately 300 MHz to 30 MHz, with the higher gains occurring in the narrow bandwidths (Fig. 14). A sliding-screw tuner was inserted between the taper and the circulator and could be used to control gain over a wide range.

The totally unpredictable amplifier performance was one factor which led to the decision to use quarter-wave step transformers. The problems with the step transformers have been previously discussed.

Use of the step transformers limited amplifier performance to within the passband of the transformers, and little activity was noted outside the passband. Gain and bandwidth performance was similar to that obtained with tapers. However, neither the exact frequency of operation nor the amount of gain could be predicted by using only the diode manufacturer's specifications and calculated waveguide parameters.

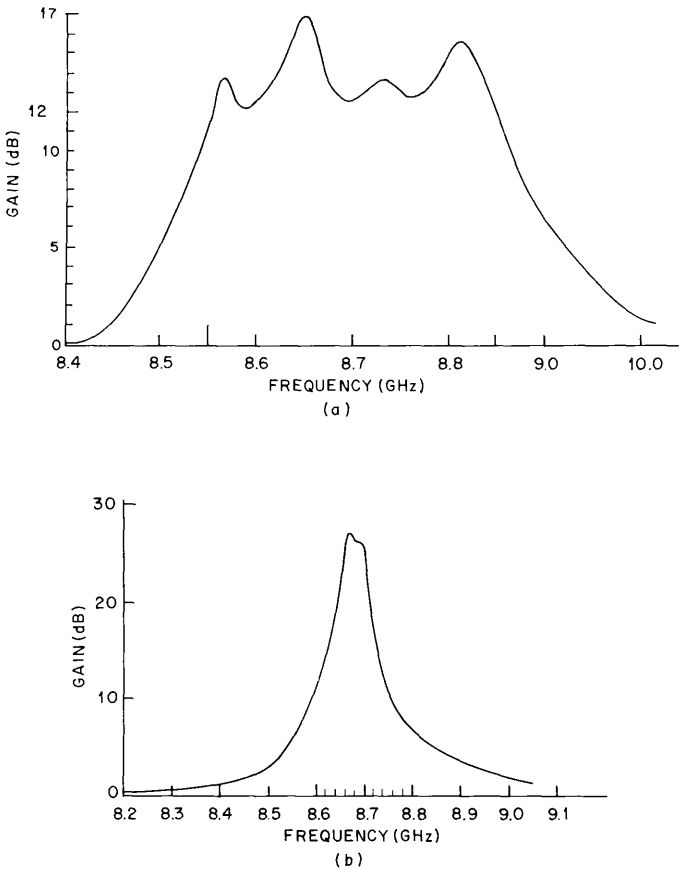

Fig. 14 - Typical gain characteristics noted in experimental study: (a) Bandwidth ≈ 300 MHz and (b) bandwidth ≈ 50 MHz

The realization of a reasonably well matched and fairly broadband transition between standard-height and reduced-height waveguide coupled with a stable tunnel-diode waveguide circuit will allow microwave frequency measurements which will characterize the entire network. Adjustments can then be made to the transformer section and the tuning element to obtain a desired amount of gain at a particular frequency.

DISCUSSION

Fabrication and packaging techniques presently employed tend to limit the use of the tunnel diode at frequencies above 20 GHz.

The majority of tunnel diodes available use a dot-alloyed junction which is then etched to obtain a desired value of peak current. A sketch of a typical dot-alloyed tunnel diode before and after etching is shown in Fig. 15. The junction region is very small in diameter and very fragile upon completion of the etching process. Packaging of this device requires that contact be made to the top of the junction and is usually accomplished by a thin metal ribbon or a wire mesh; the completely packaged diode is shown in Fig. 16. The common means of mounting and biasing the tunnel diode is to place the package between pressure contacts. Unless extreme care is taken, the junction may be destroyed because of excessive pressure or the concentration of mounting pressure at a point on the package contact surface rather than distributed over the entire contact surface.

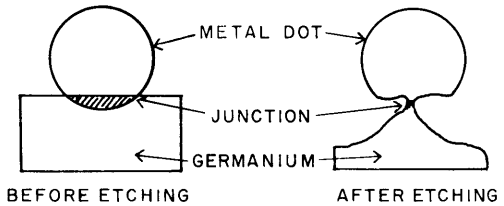

Fig. 15 - Fabrication of tunnel-diode junction

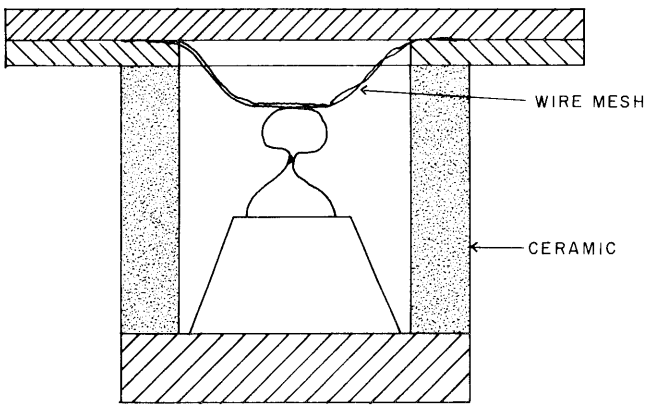

Fig. 16 - Internal construction of packaged tunnel diode

The junction capacity, which is a strong factor in realizing a high resistive cut-off frequency, is a function of junction area. Thus, a high f_{ro} also necessitates a small-diameter junction. Therefore the higher the f_{ro}, the more fragile the tunnel diode becomes.

Figure 17 shows the voltage-current characteristics of a tunnel diode before and after excessive mounting pressure was applied. The appearance of the curve after the application of the excessive pressure indicates that a parallel resistance was added to the diode. As more pressure is applied, the diode either becomes an open or a short circuit, thus indicating destruction of the diode.

This problem can be alleviated somewhat through the use of a cushion to support the diode and absorb mounting pressure. Fine wire mesh cushions have been used, and fewer failures due to pressure have been noted. However, care is still required to avoid damaging the tunnel diode. The use of cushions does complicate the mounting structure both physically and electrically.

The packaging of the tunnel diode introduces a parasitic circuit element, namely package capacitance C_p, and is the principal source of the series inductance L_s. These parasitics tend to limit both the bandwidth and the frequency of operation of tunnel-diode amplifiers. Also, L_s is a prime factor in the possible instability of tunnel-diode circuits.

Tunnel diodes have been fabricated that operated well into the millimeter wave region. Amplification at 85 GHz (1) and oscillations at 103 GHz (8) have been reported. However, the tunnel diodes used in these applications were of point-contact construction and were fabricated directly in the waveguide. This type of construction has its problems but presently is the only way to obtain satisfactory performance in the millimeter wave region.

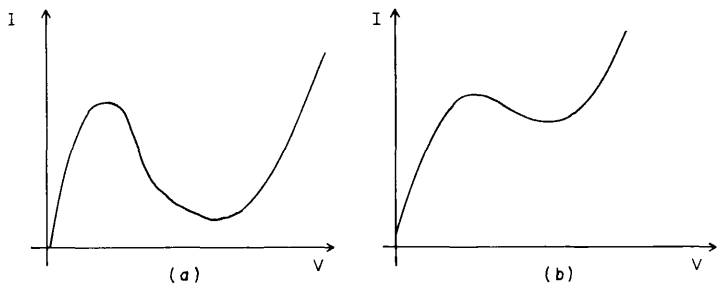

Fig. 17 - Effect of pressure on voltage-current characteristic of tunnel diode: (a) Normal characteristic (b) effect of pressure

SUMMARY

Waveguide operation of tunnel-diode reflection amplifiers using commercially available, packaged tunnel diodes has been achieved at X-band frequencies. A comprehensive design procedure, based on the tunnel diode specifications furnished by the manufacturer, has not been achieved. However, these specifications can be used to select a tunnel diode and to design a mounting and biasing structure and waveguide circuit suitable for making measurements that will characterize the entire network at microwave frequencies. Knowledge of these characteristics would allow adjustment of the transformer and tuning element in order to obtain a desired amount of gain at a particular frequency.

Operation at frequencies between 26 and 40 GHz should be possible with commercially packaged diodes. However, the problem of diode fragility is serious; new fabrication and packaging techniques are needed. Furthermore, stability will become an even greater problem, since the higher resistive cutoff frequencies necessary will most likely exceed the reactive cutoff frequencies achievable in the micropill package. Lower-inductance packages will be required. Circuit elements such as variable shorts and transformers are more difficult to realize above 26 GHz. For example, if a waveguide height reduction ratio of 20 to 1 is required at K_a band, then the standard K_a-band waveguide height must be reduced from 0.140 inch to 0.007 inch. The tolerances for a step transformer to provide this transition become exceedingly critical and almost impossible to maintain by standard shop techniques.

Operation at frequencies greater than 40 GHz appears to be possible only if the tunnel diode can be integrated in a suitable waveguide structure which will eliminate, as much as possible, the parasitic circuit elements associated with the present form of packaging. This may necessitate fabrication of the tunnel diode in a structure that includes the bias network and possibly even the waveguide transformer as an integral part of the structure. Although the details are beyond the scope of this report, consideration should be given to the application of state-of-the-art developments in microminiature, integrated microwave circuits to this problem. Such techniques as have been developed in this area could be used advantageously throughout the millimeter wave region.

REFERENCES

1. Burrus, C. A., and Trambarulo, R., Proc. IRE 49 (No. 6):1075 (June 1961)

2. Nielsen, E. G., Proc. National Electronics Conference 16:785, 1960

3. Getsinger, W. J., IEEE Trans. MTT 14 (No. 2):58 (Feb. 1966)

4. Scanlan, J. O., and Kodali, V. P., Proc. IEE 114 (No. 12):1844 (Dec. 1967)

5. Schelkunoff, S. A., "Electromagnetic Waves," New York:Van Nostrand, 1963

6. Chow, W. F., "Principles of Tunnel Diode Circuits," New York:Wiley, 1964

7. Matthaei, G. L., Young, L., Jones, E. M. T., "Microwave Filters, Impedance-Matching Networks, and Coupling Structures," New York:McGraw-Hill, 1964

8. Burrus, C. A., Proc. IRE 48 (No. 12):2024 (Dec. 1960)

Security Classification

DOCUMENT CONTROL DATA - R & D

(Security classification of title, body of abstract and indexing annotation must be entered when the overall report is classified)

1. ORIGINATING ACTIVITY *(Corporate author)* Naval Research Laboratory Washington, D.C. 20390	2a. REPORT SECURITY CLASSIFICATION Unclassified 2b. GROUP

3. REPORT TITLE

THE WAVEGUIDE TUNNEL DIODE AMPLIFIER: DESIGN CONSIDERATIONS

4. DESCRIPTIVE NOTES *(Type of report and inclusive dates)*

An interim report on one phase of the problem.

5. AUTHOR(S) *(First name, middle initial, last name)*

J. J. Ayoub, Jr.

6. REPORT DATE November 12, 1968	7a. TOTAL NO. OF PAGES 20	7b. NO. OF REFS 8
8a. CONTRACT OR GRANT NO. NRL Problem R01-42 b. PROJECT NO. RR 008-05-41-5701 c. d.	9a. ORIGINATOR'S REPORT NUMBER(S) NRL Report 6764 9b. OTHER REPORT NO(S) *(Any other numbers that may be assigned this report)*	

10. DISTRIBUTION STATEMENT

This document has been approved for public release and sale; its distribution is unlimited.

11. SUPPLEMENTARY NOTES	12. SPONSORING MILITARY ACTIVITY Office of Naval Research, Department of the Navy, Washington, D.C. 20360

13. ABSTRACT

An analytic design procedure for waveguide tunnel diode amplifiers based on the use of commercially available packaged tunnel diodes and the manufacturer furnished specifications for these devices is outlined. This approach is found to be inadequate for the realization of an amplifier that must meet specified performance criteria. However, the waveguide structure resulting from this design procedure should be suitable for performing microwave frequency measurements that will allow a more complete characterization of the waveguide tunnel diode network and therefore a more exact design procedure.

The extreme fragility of high resistive cutoff frequency tunnel diodes requires that extreme care be used in the mounting and biasing of these devices. Pressure- and shock-absorbing devices should be used in the mounting structure to avoid destruction of the tunnel diode. It is concluded that the realization of tunnel diode amplifiers for frequencies above 26 GHz will necessitate new packaging techniques and possibly even new fabrication techniques for the tunnel diode itself.

DD FORM 1 NOV 65 1473 (PAGE 1)

S/N 0101-807-6801

Security Classification

Security Classification

14. KEY WORDS	LINK A ROLE	LINK A WT	LINK B ROLE	LINK B WT	LINK C ROLE	LINK C WT
Millimeter waves						
Reflection amplifier						
Tunnel diode, tuning						
Tunnel diode, stability						
Waveguide amplifier						
Tunnel diode, amplifier						

DD FORM 1 NOV 65 1473 (BACK)
(PAGE 2)

Security Classification