NRL Report 6710
Cyclotron Report No. 4

FORTRAN Programs for First Order Calculation of Properties of Beam Transport Systems

PHILIP SHAPIRO

Cyclotron Branch
Nuclear Physics Division

June 20, 1968

NAVAL RESEARCH LABORATORY
Washington, D.C.

This document has been approved for public release and sale; its distribution is unlimited.

CONTENTS

Abstract ii
Problem Status ii
Authorization ii

INTRODUCTION 1

BASIC FUNCTIONS AND SUBROUTINES 2

Matrix Manipulation Functions and Subroutines 2
Beam Transport Matrices 3
Maximum Excursion in Magnetic Elements 6
Focal Plane Function and Waist Function 9

SUBRØUTINE TWØ QUAD (R,TØL,S,XL,ACD,ADC,B,H1,H2,PCD,PDC) 12

ILLUSTRATIVE CODING EXAMPLE 16

PRØGRAM RUN QUAD 4 18

Subroutine QUAD 4 (NARR,NPRINT,I) 19
Data Input to PRØGRAM RUN QUAD 4 22

PRØGRAM QUAD MAG 2 23

ACKNOWLEDGMENTS 26

REFERENCES 27

APPENDIX A - List of Functions and Subroutines 28

APPENDIX B - Listing of Basic Functions and Subroutines 29

APPENDIX C - Listing of PRØGRAM RUN QUAD 4 and Sample Run 41

APPENDIX D - Minimum Dispersion Arrangement of Quadrupoles and Bending Magnet 46

APPENDIX E - Listing of PRØGRAM QUAD MAG 2 and Sample Run 49

ABSTRACT

A set of FORTRAN functions and subroutines has been written to facilitate calculations, using matrix techniques, of the first order properties of ion-optical systems for particle accelerators. These functions and subroutines generate matrices for various magnetic elements used in ion-optical systems and also program various matrix manipulations. A subroutine to calculate the strength of magnetic quadrupoles required to achieve prescribed focal conditions is available. Functions used to calculate the maximum excursion of a particle trajectory from the optic axis in a magnetic element, to calculate the waist of a particle beam if the emittance satisfies certain conditions, and to calculate the location of the focal plane for an arbitrary ion-optical arrangement have been written.

Programs can be written, using these functions and subroutines, to calculate the properties of particular ion-optical systems. Illustrative coding shows how such programs are written.

PRØGRAM RUN QUAD 4 may be used to calculate the properties of an arrangement of two quadrupole doublets. It has been useful for calculations on the NRL Cyclotron Beam Transport System. Included in PRØGRAM RUN QUAD 4 is a subroutine, SUBRØUTINE QUAD 4, which can be used as a building block for writing programs for a system which includes two quadrupole doublets in succession. PRØGRAM QUAD MAG 2 is used to calculate the properties of a system of two quadrupole doublets, preceding a bending magnet, which is followed by two more quadrupole doublets. This arrangement of quadrupoles and a bending magnet can be used in both a dispersive mode and a minimum-dispersion mode.

PROBLEM STATUS

This is a final report on one phase of the problem; work on other phases continues.

AUTHORIZATION

NRL Problem H01-23
Project RR 002-06-41-5008

Manuscript submitted February 14, 1968.

FORTRAN PROGRAMS FOR FIRST ORDER CALCULATION OF PROPERTIES OF BEAM TRANSPORT SYSTEMS

INTRODUCTION

It is convenient to calculate the path of a particle to first order through an ion-optical system using matrix techniques (1). The coordinates that describe a particle at some point in an ion-optical system are the displacement x from the optic axis, the angle x' the trajectory makes with the optic axis, and the fractional deviation in momentum $\Delta p/p$ of the particular particle from the central momentum of the particle beam. In matrix notation the particle is described by the column vector

$$\begin{pmatrix} x \\ x' \\ \Delta p/p \end{pmatrix} . \tag{1}$$

The change in coordinates of a particle passing through an ion-optical system is described by the matrix transformation

$$\begin{pmatrix} x_f \\ x'_f \\ \Delta p/p \end{pmatrix} = \begin{pmatrix} M_{11} & M_{12} & M_{13} \\ M_{21} & M_{22} & M_{23} \\ M_{31} & M_{32} & M_{33} \end{pmatrix} \begin{pmatrix} x_0 \\ x'_0 \\ \Delta p/p \end{pmatrix} . \tag{2}$$

The matrix indicated in Eq. (2) may be the transformation matrix for a single ion-optical element or the matrix product of the transformation matrices representing various elements in sequence.

It is generally necessary to trace the properties of a particle beam in two perpendicular planes. These calculations can be performed separately for each plane using 3 x 3 matrices, or the calculations for both planes can be performed simultaneously using 6 x 6 matrices. The programs described in this report use 3 x 3 matrices.

A set of functions and subroutines has been written in FORTRAN-63 (a Control Data Corporation version of FORTRAN) to generate matrices for the various elements of an ion-optical system, to program various matrix manipulations, and to calculate various properties of the system. A list of these functions and subroutines with their arguments is given in Appendix A for the convenience of programmers.

Programs for the investigation of particular ion-optical systems can be written using these functions and subroutines. The technique for writing such programs will be explained by a detailed discussion of the coding for a particular example. A description of two programs which have been useful for calculations on the NRL Cyclotron Beam Transport System will be given, along with instructions for using these programs.

BASIC FUNCTIONS AND SUBROUTINES

All programs which call on the basic functions and subroutines must contain the declarative statements

TYPE REAL MX

and

CØMMØN/MX/MX (100,3,3).

The array MX which is in the labeled CØMMØN block MX is intended to be one-hundred 3 x 3 matrices. For the element MX (I,J,K), I is the index for the particular matrix; J is the row index, and K is the column index for that matrix.

The usual FORTRAN convention for the variable type of the arguments of functions and subroutines, real or integer, is used in the descriptions of functions and subroutines in this report. All the real arguments are single-precision variables, and all the real functions are single-precision functions. In a few cases the internal arithmetic of the routine is done in double precision for greater precision.

Some checks are made for illegal arguments in a routine. If an illegal argument is detected, an error message is printed and the computation is terminated by a STØP command.

It is important that consistent units be used in all calculations. All lengths must be in the same units, inches for example, and the quantity x' in Eq. (1) must be in radians. The routines for bending magnets are coded so that the arguments representing the deflection angle and the angle the particle trajectory makes with the entrance-pole face and the exit-pole face of the magnet must be given in degrees.

Matrix Manipulation Functions and Subroutines

SUBRØUTINE MX MULT (I,J,K) — The subroutine MX MULT (I,J,K) multiplies the matrix I by the matrix J and puts the result into matrix K. The order for this multiplication is

$$(I) \times (J) = (K) . \tag{3}$$

SUBRØUTINE ACCUMULT (I,J,K) — The subroutine ACCUMULT (I,J,K) does successive multiplication of a string of matrices having indices starting with I and going to J in steps of 1. The result of the multiplication is put into matrix K, i.e.,

$$(I) \times (I + 1) \times \ldots \times (J) = (K) . \tag{4}$$

This routine is valid only for $J > I$. There is an error stop for $I \geqq J$ with the error message: ERRØR IN ACCUMULT (I,J,K).

SUBRØUTINE DACCUMUL (I,J,K) — The subroutine DACCUMUL (I,J,K) is the same as ACCUMULT, except that the internal arithmetic is done in double precision. There is an error stop for $I \geqq J$ with the error message: ERRØR IN DACCUMUL (I,J,K).

SUBRØUTINE MX ZERØ (I) — The subroutine MX ZERØ (I) puts zeros into all the elements of matrix I.

SUBRØUTINE PUT MX (I,J) — The subroutine PUT MX (I,J) transfers the elements of matrix I to the corresponding locations in matrix J.

SUBRØUTINE PT MX (I) — The subroutine PT MX (I) generates the printout of the contents of matrix I. The printout begins with MX I, followed by the elements of the matrix printed in E13.6 format, in three rows of three elements each.

FUNCTIØN DETR (I) — The function DETR (I) is used to calculate the value of the determinant of matrix I.

FUNCTIØN DØDETR (I) — The function DØDETR (I) calculates the value of the determinant of matrix I using double-precision arithmetic.

SUBRØUTINE INVERSE (I,J) — The subroutine INVERSE (I,J) calculates the inverse of matrix I and puts the result into matrix J. There is an error stop if the determinant of matrix I is zero. The associated error message is:

ERRØR IN INVERSE (I), DETR = 0.

SUBRØUTINE DINVERSE (I,J) — The subroutine DINVERSE (I,J) calculates the inverse of matrix I, using double-precision arithmetic, and puts the result into matrix J. There is an error stop if the determinant of matrix I is zero. The associated error message is:

ERRØR IN DINVERSE (I), DETR = 0.

Beam Transport Matrices

A derivation and more complete discussion of the matrices used in the subroutines described in this section is given by Penner (1).

SUBRØUTINE VECTOR (X,XP,DELP,I) — The subroutine VECTOR (X,XP,DELP,I) generates the column vector representing the coordinates of a particle and puts it into matrix I. A matrix with zeros in columns 2 and 3 is used as a column vector. This matrix is

$$\begin{pmatrix} X & 0 & 0 \\ XP & 0 & 0 \\ DELP & 0 & 0 \end{pmatrix}. \tag{5}$$

The correspondence between the notations of Eqs. (1) and (5) is obvious.

SUBRØUTINE F SPACE (X,I) — the subroutine F SPACE (X,I) places the matrix representing a field-free region of length X into matrix I. This matrix is

$$\begin{pmatrix} 1 & X & 0 \\ 0 & 1 & 0 \\ 0 & 0 & 1 \end{pmatrix}. \tag{6}$$

SUBRØUTINE QUAD C (XK,XL,I) — The subroutine QUAD C (XK,XL,I) places the matrix representing the converging plane of a magnetic quadrupole into matrix I. Here XK is the quadrupole strength parameter $k = (\nabla B/B\rho)^{1/2}$, where ∇B is the field gradient of the magnetic quadrupole and $B\rho$ is the magnetic rigidity of the particle. The quantity XL is the effective length ℓ of the quadrupole. This matrix is

$$\begin{pmatrix} \cos k\ell & \frac{1}{k}\sin k\ell & 0 \\ -k\sin k\ell & \cos k\ell & 0 \\ 0 & 0 & 0 \end{pmatrix}. \tag{7}$$

SUBRØUTINE QUAD D (XK,XL,I) — The subroutine QUAD D (XK,XL,I) places the matrix representing the diverging plane of a magnetic quadrupole lens into matrix I. The notation is the same as for QUAD C. This matrix is

$$\begin{pmatrix} \cosh k\ell & \frac{1}{k}\sinh k\ell & 0 \\ k\sinh k\ell & \cosh k\ell & 0 \\ 0 & 0 & 1 \end{pmatrix}. \tag{8}$$

SUBRØUTINE MAG R (XN,THETA,R,E1,E2,I) — The subroutine MAG R (XN,THETA, R,E1,E2,I) places the matrix representing the radial plane (the plane with dispersion) of a bending magnet into matrix I. Here XN is the field index n. The magnetic field in the magnet is assumed to have a radial dependence given by

$$B(R') = B(R) \times (R'/R)^{-n}. \tag{9}$$

The quantity R is the radius of the central trajectory in the magnet. This trajectory has radial-plane coordinates $x = 0$ and $x' = 0$. Note that x is positive if the particle is outside the central trajectory in the magnet ($R' > R$). The geometry of the magnet which bends the central trajectory through the angle ϑ (THETA in the subroutine) is shown in Fig. 1. The arguments E1 ($\equiv \epsilon_1$) and E2 ($\equiv \epsilon_2$) of the subroutine are the angles the incident trajectory and the exiting trajectory, respectively, make with the normal to the pole edge of the magnet. The angles ϵ_1 and ϵ_2 are positive if the path outside the magnet lies on the same side of the normal to the pole edge as the center of curvature of the particle's deflection (ϵ_1 and ϵ_2 are both positive, as shown in Fig. 1). This sign convention means that positive ϵ_1 or positive ϵ_2 implies focusing in the axial plane of the magnet at the respective pole edges.

In the subroutine the angles THETA, E1, and E2 are in degrees. The field index n is restricted to values such that $0 \leqq n < 1$.

The matrix for the radial plane of the magnet is

$$\begin{pmatrix} \cos\theta + \frac{\sin\theta\tan\epsilon_1}{(1-n)^{1/2}} & \frac{R}{(1-n)^{1/2}}\sin\theta & \frac{R}{1-n}(1-\cos\theta) \\ M_{21} & \cos\theta + \frac{\sin\theta\tan\epsilon_2}{(1-n)^{1/2}} & M_{23} \\ 0 & 0 & 1 \end{pmatrix}, \tag{10}$$

where

$$M_{21} = -\frac{1}{R}\left\{\sin\theta\left[(1-n)^{1/2} - \frac{\tan\epsilon_1 \tan\epsilon_2}{(1-n)^{1/2}}\right] - \cos\theta\,(\tan\epsilon_1 + \tan\epsilon_2)\right\},$$

$$M_{23} = \frac{\sin\theta}{(1-n)^{1/2}} + \frac{\tan\epsilon_2}{1-n}(1-\cos\theta),$$

and

$$\theta = (1-n)^{1/2}\,\vartheta.$$

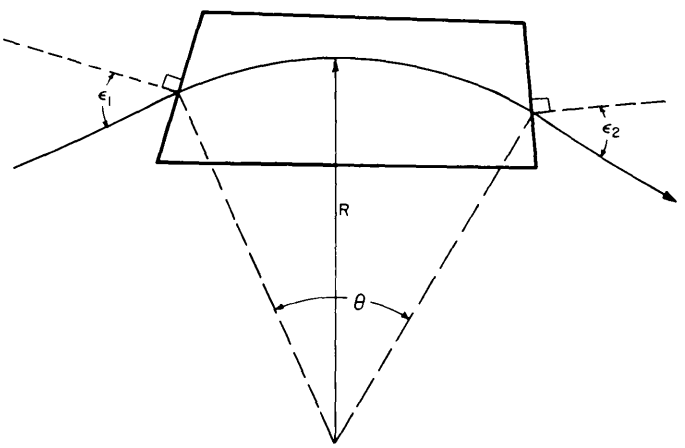

Fig. 1 - Geometry of the central trajectory in a bending magnet. The angles ϵ_1 and ϵ_2 are positive for the case illustrated.

SUBRØUTINE MAG Z (XN,THETA,R,E1,E2,I) — The subroutine MAG Z (XN,THETA, R,E1,E2,I) places the matrix representing the axial plane of a bending magnet into matrix I. The arguments of the subroutine are the same as those for MAG R. The matrix generated by this subroutine depends on whether $n = 0$ (uniform field magnet) or $0 < n < 1$.

For $n = 0$, the matrix is

$$\begin{pmatrix} 1 - \vartheta\tan\epsilon_1 & R\vartheta & 0 \\ M_{21} & 1 - \vartheta\tan\epsilon_2 & 0 \\ 0 & 0 & 1 \end{pmatrix}, \tag{11}$$

where

$$M_{21} = -\frac{1}{R}\left[(\tan\epsilon_1 + \tan\epsilon_2) - \vartheta\tan\epsilon_1\tan\epsilon_2\right].$$

For $0 < n < 1$, the matrix is

$$\begin{pmatrix} \cos n^{1/2}\,\vartheta - \frac{1}{n^{1/2}}\sin n^{1/2}\,\vartheta \tan\epsilon_1 & \frac{R}{n^{1/2}}\sin n^{1/2}\,\vartheta & 0 \\ M_{21} & \cos n^{1/2}\,\vartheta - \frac{1}{n^{1/2}}\sin n^{1/2}\,\vartheta \tan\epsilon_2 & 0 \\ 0 & 0 & 1 \end{pmatrix}, \tag{12}$$

where

$$M_{21} = -\frac{1}{R}\left[\sin n^{1/2}\,\vartheta\left(n^{1/2} - \frac{1}{n^{1/2}}\tan\epsilon_1 \tan\epsilon_2\right) + \cos n^{1/2}\,\vartheta\,(\tan\epsilon_1 + \tan\epsilon_2)\right].$$

SUBRØUTINE REVERS (I) — Many beam transport systems have several bending magnets, some of these magnets deflecting the beam to the right and others deflecting the beam to the left in the radial plane. When the matrix transformations are applied to such a system, it must be remembered that x was defined as positive for a particle trajectory with radius greater than R. Hence, it is necessary to define an *inverted bending magnet* as one in which the direction for positive x is opposite to the direction assigned as positive in the main portion of the system. This is equivalent to a reflection of the coordinate system about the central axis in the inverted magnet, with $\Delta p/p$ unchanged. This reflection, which is generated by the matrix

$$R = \begin{pmatrix} -1 & 0 & 0 \\ 0 & -1 & 0 \\ 0 & 0 & 1 \end{pmatrix} \tag{13}$$

must be done at the entrance and at the exit of the inverted magnet; therefore, the matrix for an inverted magnet is

$$M_I = \begin{pmatrix} -1 & 0 & 0 \\ 0 & -1 & 0 \\ 0 & 0 & 1 \end{pmatrix} (\text{MAG R}) \begin{pmatrix} -1 & 0 & 0 \\ 0 & -1 & 0 \\ 0 & 0 & 1 \end{pmatrix}, \tag{14}$$

where (MAG R) is the matrix for the motion in the radial plane for the magnet which bends the beam in the normal direction. Clearly, the inversion of a magnet does not affect the matrix representing the beam trajectory in the axial plane.

SUBRØUTINE REVERS(I) — The subroutine REVERS (I) puts the matrix R of Eq. (13) into matrix I.

Maximum Excursion in Magnetic Elements

Several functions have been written to determine the maximum excursion of a particle trajectory from the optic axis in magnetic focusing elements. This information is important to assure correct design or selection of the magnetic elements so that no particles in the beam will strike the poles of the magnet.

FUNCTIØN C QUAD MAX (XK,XL,I) — The function C QUAD MAX (XK,XL,I) is used to calculate the maximum excursion of a particle trajectory from the optic axis in the converging plane of a quadrupole. Here the arguments XK and XL have the same meaning as in the subroutine QUAD C, and the argument I refers to the matrix containing the vector representing the coordinates of the particle at the entrance to the quadrupole.

From Eq. (7), the equation of motion in the quadrupole is

$$x = x_0 \cos k\lambda + \frac{x_0'}{k} \sin k\lambda , \tag{15}$$

where x_0 and x_0' are the coordinates of the particle at the entrance to the quadrupole, and λ is the distance from the entrance to the quadrupole. A possible maximum in this trajectory occurs at the value of λ where $dx/d\lambda = 0$, i.e.,

$$\bar{\lambda} = \frac{1}{k} \tan^{-1} \frac{x_0'}{kx_0} . \tag{16}$$

This possible maximum is only of interest if $0 \leqq \bar{\lambda} \leqq \ell$, where ℓ is the effective length of the quadrupole. Since $x(\bar{\lambda})$ is not necessarily the maximum excursion in the quadrupole, the function C QUAD MAX compares $x(\bar{\lambda})$, if $\bar{\lambda}$ is within the quadrupole, and x at the entrance and exit of the quadrupole, and it selects whichever of these quantities has the maximum absolute value as the maximum excursion in the quadrupole.

The function C QUAD MAX is coded so that it is valid only for $k\ell < \pi/2$. There is an error stop if MX(I,2,1) > 0.3. The associated error message is: QUAD MAX ERRØR,MX(I,2,1) GREATER THAN 0.3. This error stop has been included in the maximum excursion functions because, if the slope of a trajectory is as large as 0.3 radian, either the parameters used in the calculations are nonsensical or there has been an error in writing the program which includes these functions.

FUNCTIØN D QUAD MAX (XK,XL,I) — The function D QUAD MAX (XK,XL,I) is used to calculate the maximum excursion of a particle trajectory from the central trajectory in the diverging plane of a quadrupole. The notation for the arguments is the same as that for C QUAD MAX.

Since there are no focusing forces in the diverging plane of a quadrupole, the maximum excursion will occur at either the entrance or the exit of the quadrupole. This function compares x at the entrance and at the exit of the quadrupole and selects the one having maximum absolute value as the maximum excursion in the quadrupole.

There is an error stop if MX(I,2,1) > 0.3. The associated error message is: QUAD MAX ERRØR, MX(I,2,1) GREATER THAN 0.3.

FUNCTIØN R MAG MAX (XN,THETA,R,E1,I) — The function R MAG MAX (XN,THETA, R,E1,I) is used to calculate the maximum excursion from the central trajectory in the radial plane of a bending magnet. Here the arguments XN, THETA, R, and E1 have the same meaning as in the subroutine MAG R, and the argument I refers to the matrix containing the vector representing the coordinates of the particle at the entrance to the bending magnet.

From Eq. (10) the trajectory of the particle in the radial plane of the bending magnet is given by

$$x = \left[\cos (1 - n)^{1/2} \alpha + \frac{\sin (1 - n)^{1/2} \alpha \tan \epsilon_1}{(1 - n)^{1/2}}\right] x_0$$

$$+ \left[\frac{R}{(1 - n)^{1/2}} \sin (1 - n)^{1/2} \alpha\right] x_0' + \frac{R}{(1 - n)} \left[1 - \cos (1 - n)^{1/2} \alpha\right] \frac{\Delta p}{p} , \quad (17)$$

where x_0, x_0', and $\Delta p/p$ are the coordinates of the particle at the entrance to the magnet, and α is the angular displacement of the particle along its trajectory, as indicated in Fig. 2. A possible maximum in this trajectory occurs at $\bar{\alpha}$ where $dx/d\alpha = 0$, i.e., where

$$\bar{\alpha} = \frac{1}{(1 - n)^{1/2}} \tan^{-1} \left[\frac{x_0 \tan \epsilon_1 + Rx_0'}{(1 - n)^{1/2} x_0 - \frac{R}{(1 - n)^{1/2}} \frac{\Delta p}{p}}\right] . \quad (18)$$

This possible maximum is only of interest if $0 \leqq \bar{\alpha} \leqq \vartheta$, where ϑ is the deflection angle of the magnet.

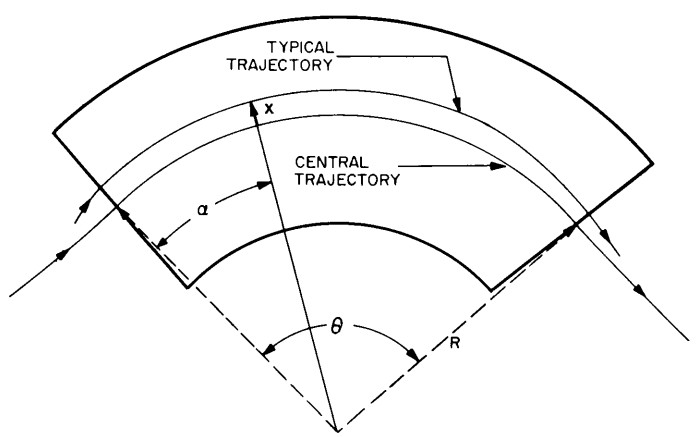

Fig. 2 - Illustration of the coordinates used in the discussion of the function R MAG MAX and the function Z MAG MAX. These functions determine the maximum excursion of a trajectory from the optic axis in a bending magnet.

FUNCTIØN R MAG MAX compares $x(\bar{\alpha})$, if $0 \leqq \bar{\alpha} \leqq \vartheta$, and x at the entrance and at the exit of the magnet and selects whichever of these quantities has maximum absolute value as the maximum excursion in the magnet.

This function is coded so that it is only valid for $(1 - n)^{1/2} \vartheta < \pi$, with $n < 1$. There is an error stop if MX(I,2,1) > 0.3. The associated error message is: R MAG MAX ERRØR, MX(I,2,1) GREATER THAN 0.3.

FUNCTIØN Z MAG MAX (XN,THETA,R,E1,I) — The function Z MAG MAX (XN, THETA,R,E1,I) is used to calculate the maximum excursion of a particle trajectory from the central trajectory in the axial plane of a bending magnet. The notation for the arguments of the function is the same as that for FUNCTIØN R MAG MAX.

The two cases treated are (a) $n = 0$, in which there are no focusing forces in the axial plane, and (b) $n \neq 0$, in which there are focusing forces in the axial plane and the treatment is analogous to that given in FUNCTIØN R MAG MAX, with (1 - n) replaced by n.

If $n = 0$, the values of x at the entrance and at the exit of the magnet are compared, and the maximum excursion is whichever of these quantities has maximum absolute value.

If $n \neq 0$, the equation of motion of the particle, Eq. (12), is

$$x = \left(\cos n^{1/2}\,\alpha - \frac{1}{n^{1/2}}\,\sin n^{1/2}\,\alpha \tan \epsilon_1\right) x_0 + \left(\frac{R}{n^{1/2}}\,\sin n^{1/2}\,\alpha\right) x_0' \,. \tag{19}$$

A possible maximum occurs at $\bar{\alpha}$ where $dx/d\alpha = 0$, i.e., where

$$\bar{\alpha} = \frac{1}{n^{1/2}}\,\tan^{-1}\left[\frac{Rx_0' - x_0 \tan \epsilon_1}{n^{1/2} x_0}\right] . \tag{20}$$

This possible maximum is only of interest if $0 \leqq \bar{\alpha} \leqq \vartheta$.

In this case $n \neq 0$, and the function Z MAG MAX compares $x(\bar{\alpha})$, if $0 \leqq \bar{\alpha} \leqq \vartheta$, and x at the entrance and at the exit of the magnet and selects whichever of these quantities has maximum absolute value as the maximum excursion in the magnet.

The coding for this function is only valid for $n^{1/2}\,\vartheta < \pi$ when $n \neq 0$.

There is an error stop if MX(I,2,1) > 0.3. The associated error message is: Z MAG MAX ERRØR, MX(I,2,1) GREATER THAN 0.3.

Focal Plane Function and Waist Function

FUNCTIØN FØCAL PL(I) — The function FØCAL PL is used to determine the location of the focal plane of an ion-optical system. This function may be used to check for errors when writing ion-optics programs. It can also be used to determine the focal properties of an ion-optical element or system when the parameters of the element or system are given.

Consider the ion-optical system indicated schematically in Fig. 3. The matrix M represents the transfer matrix from the object up to and including the last focusing

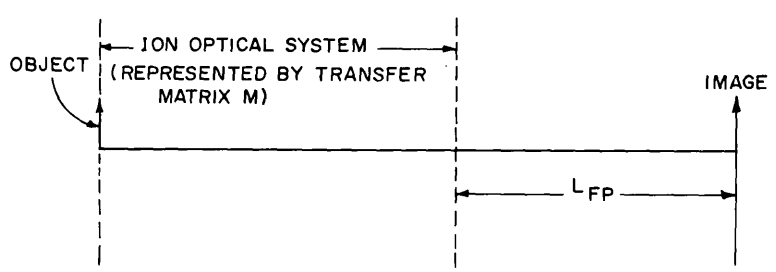

Fig. 3 - Schematic representation of the ion-optical system discussed in connection with the function FØCAL PL. This function determines the location of the focal plane L_{FP} from the transfer matrix M.

element preceding the image. The image is located a distance L_{FP} from this last focusing element. The distance L_{FP} is determined from the matrix M, which in turn may be calculated for the ion-optical system using the matrix subroutines described earlier.

If the coordinates of the object are x_0, x_0', and $\Delta p/p$ and the coordinates of the image are x, x', and $\Delta p/p$, the image and object vectors are related by

$$\begin{pmatrix} x \\ x' \\ \Delta p/p \end{pmatrix} = \begin{pmatrix} 1 & L_{FP} & 0 \\ 0 & 1 & 0 \\ 0 & 0 & 1 \end{pmatrix} \begin{pmatrix} M_{11} & M_{12} & M_{13} \\ M_{21} & M_{22} & M_{23} \\ M_{31} & M_{32} & M_{33} \end{pmatrix} \begin{pmatrix} x_0 \\ x_0' \\ \Delta p/p \end{pmatrix}, \tag{21}$$

where the transfer matrix M has been written out explicitly and multiplied by the matrix representing the field-free region of length L_{FP}. When the matrix multiplication has been performed,

$$\begin{pmatrix} x \\ x' \\ \Delta p/p \end{pmatrix} = \begin{pmatrix} M_{11} + L_{FP} M_{21} & M_{12} + L_{FP} M_{22} & M_{13} + L_{FP} M_{23} \\ M_{21} & M_{22} & M_{23} \\ M_{31} & M_{32} & M_{33} \end{pmatrix} \begin{pmatrix} x_0 \\ x_0' \\ \Delta p/p \end{pmatrix}; \tag{22}$$

then

$$x = (M_{11} + L_{FP} M_{21})x_0 + (M_{12} + L_{FP} M_{22})x_0' + (M_{13} + L_{FP} M_{23}) \frac{\Delta p}{p} . \tag{23}$$

The condition for a first order focus is that the coefficient of x_0' equal zero. Hence,

$$L_{FP} = - \frac{M_{12}}{M_{22}} . \tag{24}$$

FUNCTIØN FØCAL PL(I) evaluates L_{FP} using Eq. (24) for the matrix denoted by index I in the argument of the function. *One must remember that the matrix denoted by the index I represents the entire ion-optical system up to but not including the last field-free region preceding the image.*

FUNCTION WAIST (X,XP,I) — Many accelerator users have noted that the location of the focal plane of an ion-optical system, as determined experimentally, often differs from the location theoretically predicted. This discrepancy is usually explained by saying that an experimental focus is determined by finding the minimum in the beam size, or waist, which may be at a different location from the first order focus computed from theory.

The location of such a waist may be easily calculated when the beam emittance boundary at the source is an ellipse in phase space; i.e., the values of x and x' of the individual rays in the beam are within the boundaries of an ellipse, as indicated in Fig. 4a. The boundary of the ellipse is given by

$$x = x_0 \cos \theta \tag{25a}$$

and

$$x' = x_0' \sin \theta . \tag{25b}$$

The ellipse is assumed to be imaged by an ion-optical system represented by the matrix M, followed by a field-free region of length L, in complete analogy with the treatment given for FUNCTIØN FØCAL PL. The ellipse will be rotated with its area unchanged, as shown in Fig. 4b. The apparent size of the beam downstream from the source is x_{max}, as indicated in the figure, and the waist occurs at that value of L for which x_{max} is a minimum.

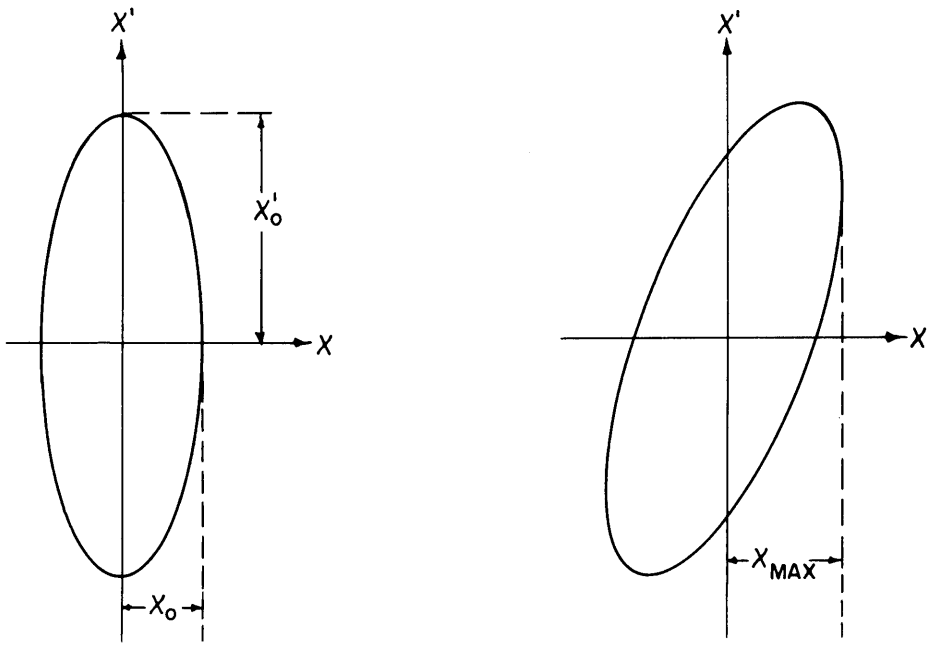

(a) Phase-space ellipse at the source

(b) Phase-space ellipse downstream from the source

Fig. 4 - Representation of the particle beam by an ellipse in phase space

The image vector for the rotated ellipse is given by

$$\begin{pmatrix} x \\ x' \\ \Delta p/p \end{pmatrix} = \begin{pmatrix} 1 & L & 0 \\ 0 & 1 & 0 \\ 0 & 0 & 1 \end{pmatrix} \begin{pmatrix} M_{11} & M_{12} & M_{13} \\ M_{21} & M_{22} & M_{23} \\ M_{31} & M_{32} & M_{33} \end{pmatrix} \begin{pmatrix} x_0 \cos\theta \\ x'_0 \sin\theta \\ \Delta p/p \end{pmatrix} , \tag{26}$$

so that

$$x = (M_{11} + LM_{21})x_0 \cos\theta + (M_{12} + LM_{22})x'_0 \sin\theta + (M_{13} + LM_{23}) \frac{\Delta p}{p} . \tag{27}$$

The angle θ_{max} at which x_{max} occurs may be determined by differentiating Eq (27) with respect to θ and setting the result equal to zero. That is,

$$\frac{dx}{d\theta} = - (M_{11} + LM_{21})x_0 \sin\theta + (M_{12} + LM_{22})x'_0 \cos\theta = 0 , \tag{28}$$

giving

$$\tan \theta_{max} = \frac{(M_{12} + LM_{22})x_0'}{(M_{11} + LM_{21})x_0} . \tag{29}$$

Substituting this result into Eq. (27) gives

$$x_{max} = \left\{(M_{11} + LM_{21})^2 x_0^2 + \left[M_{12} + (M_{12} + LM_{22})\right]^2 x_0'^2\right\}^{1/2} . \tag{30}$$

The location of the waist will be that value of L for which x_{max} is a minimum. Differentiating Eq. (30) with respect to L and setting the result equal to zero yields

$$\frac{dx_{max}}{dL} = \frac{M_{21}\, x_0^2 (M_{11} + LM_{21}) + M_{22}\, x'^2 (M_{12} + LM_{22})}{x_{max}} = 0 . \tag{31}$$

It can be assumed that $x_{max} \neq 0$, because the problem becomes trivial in this case. Solving Eq. (31) for L yields

$$L_{waist} = - \frac{M_{11}\, M_{21}\, x_0^2 + M_{12}\, M_{22}\, x_0'^2}{M_{21}^2\, x_0^2 + M_{22}^2\, x_0'^2} . \tag{32}$$

Another approach to finding the location of the waist is to determine where the major and minor axes of the phase-space ellipse are parallel to the major and minor axes of the source phase-space ellipse. It can be shown that an identical result is obtained for L_{waist} as was obtained by minimizing x_{max}. It might be noted that, for a point source ($x_0 = 0$),

$$L_{waist} = - \frac{M_{12}}{M_{22}} ,$$

which is exactly the expression for L_{FP} given in Eq. (24), the distance for a first order focus.

The location of the waist from the last ion-optical focusing element is calculated by the function WAIST for the matrix denoted by the index I. The arguments X and XP are the semiaxes of the phase-space ellipse denoted by x_0 and x_0', respectively, in Fig. 4a. *It is important to remember that the matrix denoted by the index I represents the entire ion-optical system up to but not including the last field-free region preceding the image.*

SUBRØUTINE TWØ QUAD (R,TOL,S,XL,ACD,ADC,B,H1,H2,PCD,PDC)

The subroutine TWØ QUAD (R,TØL,S,XL,ACD,ADC,B,H1,H2, PCD,PDC) is used to calculate the values of the strength parameters k_1 and k_2 of a quadrupole doublet when the image and object distances are specified. Enge (2) has shown that the quadrupole strength parameters may be determined by solving a pair of simultaneous transcendental equations. These equations, specialized to the arrangement shown in Fig. 5a, are

$$\frac{1}{k_1} \coth (k_1 L + \Phi_1) = \frac{1}{k_2} \cot (k_2 L - \Phi_2) - S , \tag{33a}$$

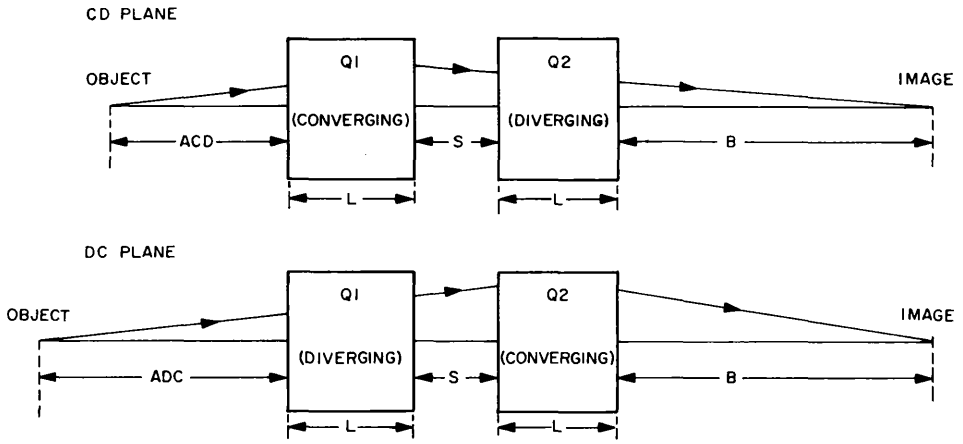

(a) Real object

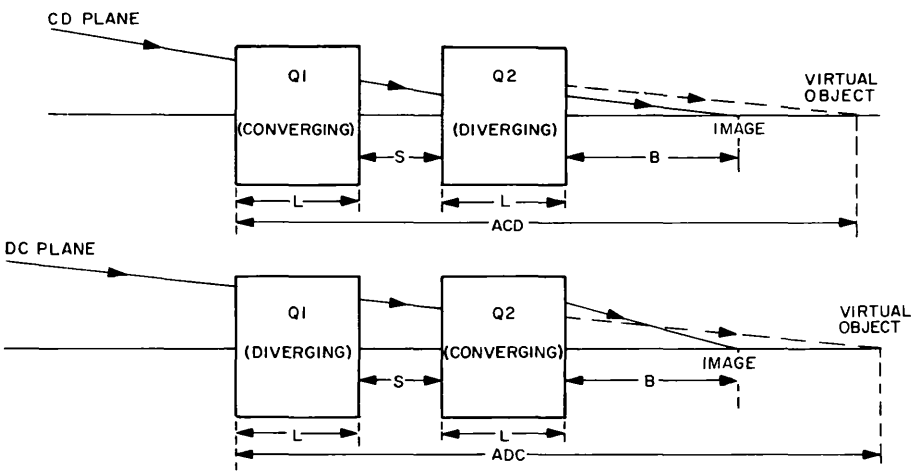

(b) Virtual object

Fig. 5 - Schematic representation of a quadrupole doublet, illustrating the coordinate system used in the subroutine TWØ QUAD

where

$$\coth \Phi_1 = k_1 A_{DC}$$

and

$$\cot \Phi_2 = k_2 B ,$$

and

$$\frac{1}{k_1} \cot (k_1 L + \Phi_1') - S = \frac{1}{k_2} \coth (k_2 L - \Phi_2') , \tag{33b}$$

where

$$\cot \Phi_1' = -k_1 A_{CD}$$

and

$$\coth \Phi_2' = k_2 B .$$

Here the object distances A_{CD} in the CD plane (converging quadrupole first) and A_{DC} in the DC plane (diverging quadrupole first) are not necessarily the same, but the quadrupole doublet is double-focusing; the image distance B is the same in both planes. Object and image distances are measured from the effective entrance-field and exit-field boundary of the first and second quadrupoles, respectively. The quadrupole strength parameters for the first and second quadrupoles are k_1 and k_2, respectively; the effective pole length of each quadrupole is L; and S is the spacing between the effective pole edges of each element of the doublet.

Equations (33a) and (33b) are valid only when $k_1 A_{DC} > 1$ and $k_2 B > 1$, since the absolute value of the hyperbolic cotangents must be greater than unity. Enge gives another set of equations for the case where $k_1 A_{DC} < 1$ and $k_2 B < 1$. However, it will be shown that these equations can be recast so that both cases are covered by one set of equations.

Sometimes the beam transport system preceding the quadrupole doublet focuses the beam beyond the doublet, and it is desired to refocus the beam closer to the doublet, as indicated in Fig. 5b. This situation is called the virtual-object case, to be distinguished from the real-object case already discussed. Following the procedure given by Enge (2) for the real-object case, the following equations to be satisfied by the quadrupole strength parameters for the virtual-object case can be derived:

$$\frac{1}{k_1} \coth (k_1 L + \Phi_1) = \frac{1}{k_2} \cot (k_2 L - \Phi_2) - S , \tag{34a}$$

where

$$\coth \Phi_1 = -k_1 A_{DC}$$

and

$$\cot \Phi_2 = k_2 B ,$$

and

$$\frac{1}{k_1} \cot (k_1 L + \Phi_1') - S = \frac{1}{k_2} \coth (k_2 L - \Phi_2') , \tag{34b}$$

where

$$\cot \Phi_1' = k_1 A_{CD}$$

and

$$\coth \Phi_2' = -k_2 B .$$

Again, these equations are given for $k_1 A_{DC} > 1$ and $k_2 B > 1$. *These equations for the virtual-object case are valid only if* $A_{CD} > S + 2L$ *and* $A_{DC} > S + 2L$.

Equations (33) and (34) can be combined by introducing the variable R, where R *equals* +1 *for a real object and* -1 *for a virtual object.* The equations then become

$$\frac{1}{k_1} \coth (k_1 L + \Phi_1) = \frac{1}{k_2} \cot (k_2 L - \Phi_2) - S , \tag{35a}$$

where

$$\coth \Phi_1 = R k_1 A_{DC}$$

and

$$\cot \Phi_2 = k_2 B ,$$

and

$$\frac{1}{k_1} \cot (k_1 L + \Phi_1') - S = \frac{1}{k_2} \coth (k_2 L - \Phi_2') , \tag{35b}$$

where

$$\cot \Phi_1' = -Rk_1 A_{CD}$$

and

$$\coth \Phi_2' = -k_2 B .$$

Substituting the expressions for Φ_1, Φ_2, Φ_1', and Φ_2' into the arguments of the trigonometric and the hyperbolic functions and expanding these functions into functions of a single argument yields

$$\frac{1}{k_1} \times \frac{k_1 A_{DC} + R \tanh k_1 L}{k_1 A_{DC} \tanh k_1 L + R} = \frac{1}{k_2} \times \frac{k_2 B + \tan k_2 L}{k_2 B \tan k_2 L - 1} - S \tag{36a}$$

and

$$\frac{1}{k_1} \times \frac{k_1 A_{CD} + R \tan k_1 L}{k_1 A_{CD} \tan k_1 L - R} - S = \frac{1}{k_2} \times \frac{k_2 B + \tanh k_2 L}{k_2 B \tanh k_2 L + 1} . \tag{36b}$$

Recasting the equations into this form eliminates the necessity of using different equations depending on whether $k_1 A_{DC}$ and $k_2 B$ are less than or greater than unity. The subroutine TWØ QUAD obtains the quadrupole parameters k_1 and k_2 by solving Eqs. (36) by an iterative technique until the differences in k_1 and k_2 obtained by further iteration are less than a prescribed tolerance.

Expressions for the magnification M, where M = Image Size/Object Size, have been given by Enge* (2) for the real-object case, and expressions for the magnification for the virtual-object case can be derived by the method Enge used for the real-object case. Again, introducing the variable R makes it possible to use one set of expressions for both cases, and the magnifications are given by

$$M_{DC} = \frac{\cos k_2 L - k_2 B \sin k_2 L}{\cosh (k_1 L) + Rk_1 A_{DC} \sinh k_1 L} \tag{37a}$$

and

$$M_{CD} = \frac{\cosh k_2 L + k_2 B \sinh k_2 L}{\cos k_1 L - Rk_1 A_{CD} \sin k_1 L} , \tag{37b}$$

where R *equals* +1 *for a real object and* -1 *for a virtual object.*

The arguments R, ACD, ADC, B, and XL are input parameters for the subroutine TWØ QUAD, corresponding to the parameters R, A_{CD}, A_{DC}, B, and L, respectively, previously defined. The argument TØL is the tolerance to be allowed in determining k_1 and k_2 (TØL = 1.0E-6 has generally been used in practical calculations). The arguments

*The definition used by Enge for the magnification is the negative of the definition given here.

H1, H2, PCD, and PDC are outputs from the subroutine corresponding to the parameters k_1, k_2, M_{CD}, and M_{DC}, previously defined.

The method used to solve for k_1 and k_2 is valid only for $k_1 L < \pi/2$ and $k_2 L < \pi/2$. There is an error stop if $|R| \neq 1$. The associated error message is: ABSØLUTE VALUE ØF R NØT EQ 1.0, TWØ QUAD (R,TØL,S,XL,ACD,B). There is an additional error stop if the solution of Eqs. (36) does not converge after 100 iterations. Experience in using this subroutine with a tolerance of 1×10^{-6} has indicated that this error stop is reached only when incorrect arguments have been used in the subroutine, particularly if the restriction $A_{CD} > S + 2L$ and $A_{DC} > S + 2L$ for the virtual-object case is violated. The solution for the quadrupole parameters will usually converge to a tolerance of 1×10^{-6} in eight to ten iterations. The associated error message for this error stop is: DØES NØT CØNVERGE FØR TWØ QUAD (R,TØL,S,XL,ACD,ADC,B).

A listing of the basic functions and subroutines, as well as the subroutine TWØ QUAD, is given in Appendix B.

ILLUSTRATIVE CODING EXAMPLE

Use of the various basic functions and subroutines to build up a program for a specific ion-optical system will be illustrated by programming the tracing of a trajectory through a quadrupole doublet. When coding PRØGRAM EXAMPLE, comments were included at essentially every step to guide the reader in understanding the program.

The geometry of the quadrupole doublet is shown in Fig. 6, along with the indices of the matrices used to represent the various elements of the system in each plane. The input data are given in the data statement. The various lengths are defined in Fig. 6, and

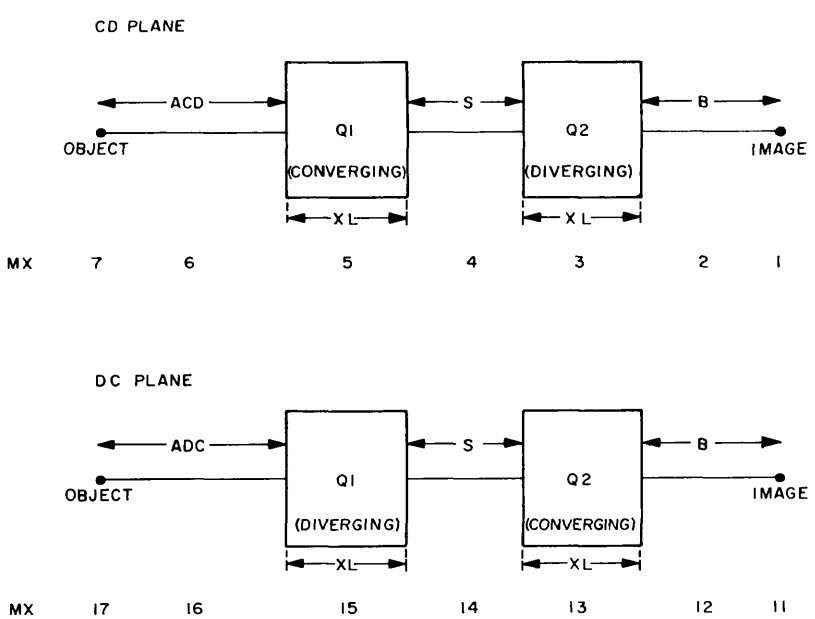

Fig. 6 - Schematic representation of a quadrupole doublet to show the notation used in the program EXAMPLE. The indices representing the locations of the matrices representing each quadrupole, each field-free region, and the object and image vectors are given below each of these elements.

the initial coordinates of the trajectory to be traced, x_{in} and x'_{in}, are XCD and XPCD, respectively, in the CD plane, and XDC and XPDC, respectively, in the DC plane; $\Delta p/p = 0$.

The subroutine TWØ QUAD permits the quadrupole strength parameters for Q1 and Q2 to be computed and stored in XK1 and XK2, respectively, and the magnifications in the CD plane and DC plane are computed and stored in PCD and PDC, respectively. Using the subroutines for the beam transport matrices, the matrices representing the initial coordinates of the particle, quadrupoles, and field-free regions are put into the locations indicated in Fig. 6. Since these matrices are stored in consecutive locations, the vector representing the image can be easily obtained using the subroutine ACCUMULT. The ratio x_{out}/x_{in} can then be determined and compared with the magnification computed in the subroutine TWØ QUAD. The maximum excursion in the quadrupole is obtained by first computing the vector representing the ray at the entrance to the particular quadrupole and then using the function C QUAD MAX or the function D QUAD MAX, whichever is appropriate, to compute the maximum excursion.

As an overall check on the programming, the function FØCAL PL has been used to calculate the distance of the image from the exit of Q2. To do this the matrices representing the beam transport system, up to and including Q2, are first multiplied using the subroutine ACCUMULT to obtain the transfer matrix up to the exit of Q2, as required for input to the function FØCAL PL.

The first four columns of the printout are the values of x_{in}, x'_{in}, x_{out}, and x'_{out}, respectively. The ratio x_{out}/x_{in}, computed by ray tracing, and the magnification obtained using the subroutine TWØ QUAD, are compared in columns 5 and 6, respectively. The results of the focal plane calculations, given in column 7, agree with the input data for B, as they should for a correct calculation. The maximum excursions of the ray from the optic axis in Q1 and Q2 are given in columns 8 and 9, respectively.

```
      PROGRAM EXAMPLE
      TYPE REAL MX
      COMMON/MX/MX(100,3,3)
      DATA (ACD=100.0),(ADC=150.0),(B=50.0),(XCD=.02),(XDC=.04),
     1(XPCD=.01),(XPDC=.001),(S=6.0),(XL=10.0)
C**DIMENSION QUAD STRENGTH PARAMETERS
      XK1=XK2=0
C**DIMENSION MAGNIFICATION OUTPUT FOR SUBROUTINE TWO QUAD
      PCD=PDC=0
C**CALCULATE XK1 AND XK2
      CALL TWO QUAD(1.0,1.0E-6,S,XL,ACD,ADC,B,XK1,XK2,PCD,PDC)
C**PREPARE MATRICES FOR CD PLANE
      CALL VECTOR(XCD,XPCD,0,7)
      CALL F SPACE(ACD,6)
      CALL QUAD C(XK1,XL,5)
      CALL F SPACE(S,4)
      CALL QUAD D(XK2,XL,3)
      CALL F SPACE(B,2)
C**PREPARE MATRICES FOR DC PLANE
      CALL VECTOR(XDC,XPDC,0,17)
      CALL F SPACE(ADC,16)
      CALL QUAD D(XK1,XL,15)
      CALL F SPACE(S,14)
      CALL QUAD C(XK2,XL,13)
      CALL F SPACE(B,12)
C*******************
C**START CALCULATION--CD PLANE
C*******************
C**COMPUTE IMAGE VECTOR AND PUT IN MX 1
      CALL ACCUMULT(2,7,1)
```

```
C**COMPUTE X OUT/X IN
      RATIO CD=MX(1,1,1)/XCD
C**COMPUT ENTRANCE VECTOR TO Q1 AND PUT IN MX 20
      CALL MX MULT(6,7,20)
C**COMPUTE MAXIMUM EXCURSION IN Q1
      Q1CDMAX=C QUAD MAX(XK1,XL,20)
C**COMPUTE ENTRANCE VECTOR TO Q2 AND COMPUTE MAXIMUM EXCURSION IN Q2
      CALL ACCUMULT(4,7,20)
      Q2CDMAX=D QUAD MAX(XK2,XL,20)
C**FOCAL PLANE CHECK--MX 20 WILL CONTAIN ENTIRE TRANSPORT SYSTEM EXCEPT MX 2
      CALL ACCUMULT(3,6,20)
      FPCD=FOCAL PL(20)
C*******************
C**START CALCULATION--DC PLANE
C*******************
C**COMPUTE IMAGE VECTOR AND PUT IN MX 11
      CALL ACCUMULT(12,17,11)
C**COMPUTE X OUT/X IN
      RATIO DC=MX(11,1,1)/XDC
C**COMPUTE ENTRANCE VECTOR TO Q1 AND PUT IN MX 20
      CALL MX MULT(16,17,20)
C**COMPUTE MAXIMUM EXCURSION IN Q1
      Q1DCMAX=D QUAD MAX(XK1,XL,20)
C**COMPUTE ENTRANCE VECTOR TO Q2 AND COMPUTE MAXIMUM EXCURSION IN Q2
      CALL ACCUMULT(14,17,20)
      Q2DCMAX=C QUAD MAX(XK2,XL,20)


C**FOCAL PLANE CHECK--MX 20 WILL CONTAIN ENTIRE TRANSPORT SYSTEM EXCEPT MX 12
      CALL ACCUMULT(13,16,20)
      FPDC=FOCAL PL(20)
C*******************
C**START PRINTOUT
C*******************
      PRINT 1
    1 FORMAT(1H1,11X,*X IN  XP IN   X OUT  XP OUT XOUT/XIN    MAG  FOC P
     1L  Q1 MAX  Q2 MAX*/)
      PRINT 2,XCD,XPCD,MX(1,1,1),MX(1,2,1),RATIO CD,PCD,FPCD,Q1CDMAX,
     1 Q2CDMAX
    2 FORMAT(1X,*CD PLANE*,2(1X,F6.3),4(1X,F7.4),3(1X,F7.3))
      PRINT 3,XDC,XPDC,MX(11,1,1),MX(11,2,1),RATIO DC,PDC,FPDC,Q1DCMAX,
     1Q2DCMAX
    3 FORMAT(1X,*DC PLANE*,2(1X,F6.3),4(1X,F7.4),3(1X,F7.3))
      END
```

	X IN	XP IN	X OUT	XP OUT	XOUT/XIN	MAG	FOC PL	Q1 MAX	Q2 MAX
CD PLANE	0.020	0.010	-0.0230	-0.0092	-1.1500	-1.1499	50.000	1.030	0.659
DC PLANE	0.040	0.001	-0.0074	-0.0068	-0.1854	-0.1854	50.000	0.248	0.348

PRØGRAM RUN QUAD 4

Many beam transport systems use a combination of two quadrupole doublets to form an image of a source at some distance downstream from the source. The quadrupoles can be adjusted to form an intermediate image between the doublets, or not, according to various requirements. If an intermediate image is used the variation in the location of the intermediate image makes it possible to change the magnification of this quadrupole arrangement by adjusting the currents in the quadrupoles rather than by physically moving the quadrupoles. There is sometimes another consideration in choosing whether or not to use an intermediate focus. Every time a particle beam goes through a focal plane

of the system the momentum dispersion perpendicular to the optic axis is reversed. If dispersive magnetic elements precede and follow the system of two quadrupole doublets, the choice of whether or not to use an intermediate focus may be dictated by considerations of maximizing or minimizing the momentum dispersion perpendicular to the optic axis.

The subroutine QUAD 4 has been written to facilitate writing programs for beam transport systems which use two quadrupole doublets as a subsystem. In addition, the program RUN QUAD 4 has been written so that data can be read into the subroutine QUAD 4 from data cards to ray trace through the system of two quadrupole doublets by itself.

Subroutine QUAD 4 (NARR,NPRINT,I)

The subroutine QUAD 4 (NARR,NPRINT,I) requires the same declarative statements as are required for the basic functions and subroutines, plus the additional labeled CØMMØN block Q4. Thus, every program which calls on the subroutine must begin with

TYPE REAL MX

and

CØMMØN/MX/MX(100,3,3)/Q4/TABLE(50,12),PARAM(8),N TABLE, XKK(4).

The geometrical arrangement of the quadrupoles is shown in Fig. 7. All notations for the various quantities on this figure correspond to the notations used on the printout for the subroutines. The vectors shown above the object, intermediate image, and image indicate the notation for the coordinates of a particle trajectory at these points. All quadrupoles have the pole length LQUAD, and each doublet has the spacing SQUAD between the individual quadrupoles.

Because the radial and the axial virtual sources of many cyclotrons are not in the same plane, the distances from the object to the entrance of the first quadrupole, L1H in the horizontal plane and L1V in the vertical plane, need not be identical. However, it is assumed that the system is double focusing, so that only one quantity L3 is required to specify the distance from the exit of the last quadrupole to the image.

The quantity L2 is the distance between the exit of the second quadrupole and the entrance of the third quadrupole. If focusing with an intermediate image is used, the

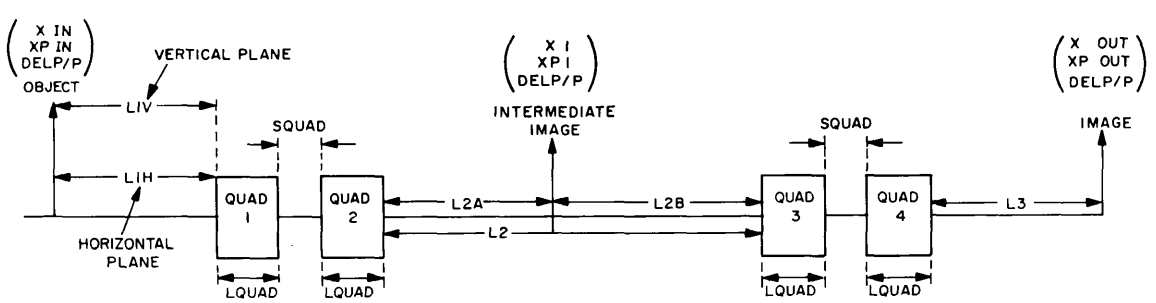

Fig. 7 - Schematic representation of the beam transport system consisting of two quadrupole doublets, illustrating the notation used in the subroutine QUAD 4. The vectors shown above the object, intermediate image, and image give the notation for the coordinates of the particle trajectory at these points.

intermediate image is located at a distance L2A downstream from the second quadrupole and a distance L2B upstream from the third quadrupole. Thus, for an intermediate image,

$$L2A + L2B = L2 . \tag{38}$$

When no intermediate image is desired a large value ($\approx 10^{13}$) is used for L2A and L2B; the first quadrupole doublet essentially focuses at infinity, and the object for the second quadrupole doublet is taken to essentially be at infinity.

The argument NARR of the subroutine can have only the values 0 or 1. If NARR = 0, the arrangement of quadrupoles in the horizontal plane is CDDC, and if NARR = 1, the arrangement in the horizontal plane is CDCD, as indicated in Table 1.

Table 1
Arrangements of Quadrupoles for Various Values of NARR

		QUAD 1	QUAD 2	QUAD 3	QUAD 4
NARR = 0 (CDDC)	Horizontal Plane	Converging	Diverging	Diverging	Converging
	Vertical Plane	Diverging	Converging	Converging	Diverging
NARR = 0 (CDCD)	Horizontal Plane	Converging	Diverging	Converging	Diverging
	Vertical Plane	Diverging	Converging	Diverging	Converging

The argument NPRINT can also have only the values 0 or 1. If NPRINT = 0, there is no printout from the subroutine; if NPRINT = 1, there is printout of the results from the subroutine. This option is included, because the programmer using the subroutine to calculate the properties of a subsystem of a beam transport system may not want all the results printed out, or he may want the results printed out in a different format combined with results from calculations on other parts of the beam transport system.

There is an error stop if the input values of NARR and NPRINT are neither 0 nor 1. The associated error message is: QUAD 4 INPUT ERRØR.

This subroutine uses the fourteen matrices I to I + 13, where I is the third argument of the subroutine, during execution of the subroutine. The programmer must choose a value of I (of course, $I \leqq 87$) such that any matrices previously stored and required later in the calling program are not disturbed.

Input data from and output data to the program calling for the subroutine are handled through the variables dimensioned in the labeled CØMMØN block Q4.

The various distances involved have to be stored in the array PARAM before calling the subroutine. The correspondences between the elements of the array PARAM and the distances shown in Fig. 7 are given in Table 2.

The quadrupole strength parameters K1, K2, K3, and K4 are computed from the input data stored in PARAM, and these results are stored in XKK(1), XKK(2), XKK(3), and XKK(4), respectively, where they are available for further computation or printout. The quadrupole strength parameters depend on $B\rho$, which is proportional to p, the momentum of the particle; corrected values of the quadrupole strength parameters which depend on the actual $\Delta p/p$ of the individual ray, i.e.,

Table 2
Correspondences Between Array PARAM and
Quantities Shown in Fig. 7 and in the Printout

Array Element	Distance	Array Element	Distance
PARAM (1)	SQUAD	PARAM (5)	L2
PARAM (2)	LQUAD	PARAM (6)	L2A
PARAM (3)	L1H	PARAM (7)	L2B
PARAM (4)	L1V	PARAM (8)	L3

$$K1(\text{corrected}) = K1 \times \left(1 - \frac{1}{2}\ \frac{\Delta p}{p}\right) \tag{39}$$

(and so forth for each quadrupole strength parameter), are used in the calculations.

The input and output data associated with the individual trajectories to be traced are handled through the array TABLE. The NTABLE/2 trajectories are traced in the horizontal and vertical planes, where NTABLE must be less than 50 and must be an even number. The correspondences between the elements of the array TABLE, the notations in Fig. 7, and the printout are shown in Table 3. The initial coordinates of the trajectories to be computed have to be stored in TABLE (N,1), TABLE (N,2), and TABLE (N,3), where N goes from 1 to NTABLE, with N odd for the initial coordinates in the horizontal plane and N even for the corresponding coordinates in the vertical plane. After execution of the subroutine, the computational results are stored in TABLE (N,4) through TABLE (N,12), where MAG ØUT = X ØUT/X IN, and MAX 1, MAX 2, MAX 3, and MAX 4 are the maximum excursions of the particular trajectory in the quadrupoles Q1 to Q4, respectively.

Table 3
Correspondences Between Array TABLE and
Quantities Shown in Fig. 7 and in the Printout

Array Element	Quantity	Array Element	Quantity
TABLE (N,1)	X IN	TABLE (N,7)	XP OUT
TABLE (N,2)	XP IN	TABLE (N,8)	MAG OUT
TABLE (N,3)	DELP/P	TABLE (N,9)	MAX 1
TABLE (N,4)	X1	TABLE (N,10)	MAX 2
TABLE (N,5)	XP1	TABLE (N,11)	MAX 3
TABLE (N,6)	X OUT	TABLE (N,12)	MAX 4

During execution a check is made to determine whether the input parameters imply an intermediate focus or not. If the condition

$$0.9 \times L2 \leqq L2A + L2B \leqq 1.1 \times L2 \tag{40}$$

is satisfied by the input parameters, an intermediate focus is assumed, and the results for X1 and XP1 are transferred to TABLE (N,4) and TABLE (N,5). If this condition is not satisfied, it is assumed that there is no intermediate focus; no results are stored in TABLE (N,4) and TABLE (N,5), and ******** is printed in the printout for X1 and XP1.

In this case the programmer should exercise caution when extracting the results, because meaningless data may be stored in TABLE (N,4) and TABLE (N,5).

After execution of the subroutine, the complete transfer matrix from the object to the image in the horizontal plane for $\Delta p/p = 0$ is stored in matrix I, and the corresponding transfer matrix in the vertical plane is stored in matrix I + 1. These matrices are then available to the programmer for use in further calculations.

A sample printout from the subroutine is shown in Appendix C. The notation used in the printout should be clear from the preceding discussion. A focal plane check is made, using the function FØCAL PL, to see that the data have been read in correctly and the system focuses at the required distance L3 from Q4. The quantities HFØCAL PL and VFØCAL PL in the printout should be in reasonable agreement with L3 ($\approx$a few parts in 10^4). The values of K1 to K4 that are printed out are for $\Delta p/p = 0$; a tolerance of 1×10^{-6} is used in the subroutine when these quantities are computed.

Data Input to PRØGRAM RUN QUAD 4

The program RUN QUAD 4 was written so that the subroutine QUAD 4 can be run from data read into the computer on data cards. The order and the format of the required data cards is given in Table 4. After the data are read in, the subroutine is executed NPARAM times, each time computing NTABLE/2 trajectories in both the horizontal and the vertical plane for the same sets of initial conditions. Prior to each execution, a new set of distances is read into PARAM from the NPARAM sets of data on the data cards.

The output from a sample run with this program is given in Appendix C.

Table 4
Order and Format of Data Cards for the Program RUN QUAD 4

Column	1	11	21	31	41	51	61	71
Quantity Format	NTABLE I2	NPARAM I2	–	–	–	–	–	–
There are NPARAM sets of the following two data cards.								
Quantity Format	SQUAD E10.4	LQUAD E10.4	L1H E10.4	L1V E10.4	L2 E10.4	L2A E10.4	L2B E10.4	L3 E10.4
Quantity Format	NARR I1	–	–	–	–	–	–	–
There are NTABLE/2 of the following cards.								
Quantity Format	X IN E10.4	XP IN E10.4	DELP/P E10.4	For the Horizontal Plane				
There are NTABLE/2 of the following cards.								
Quantity Format	X IN E10.4	XP IN E10.4	DELP/P E10.4	For the Vertical Plane				

Note: Each item of data is written in the specified format starting in the indicated column. The values of NTABLE and NPARAM are restricted to NTABLE $\leqq$ 50 and NPARAM $\leqq$ 10.

PRØGRAM QUAD MAG 2

The program QUAD MAG 2 was written to trace particle trajectories through the beam transport system for the initial beam paths to be activated at the NRL Cyclotron Facility. Two sets of quadrupole doublets transport the beam to the analyzing magnet, and two other sets of quadrupole doublets transport the beam from the magnet to form the image at an experiment. The notation for the various quantities used in the program, illustrated in Fig. 8, are similar to those discussed for the subroutine QUAD 4 and the program RUN QUAD 4. In fact, the subroutine QUAD 4 is used to trace the particle trajectories through the quadrupole subsystems preceding and following the analyzing magnet. The radial plane of the analyzing magnet is assumed to be in the horizontal plane.

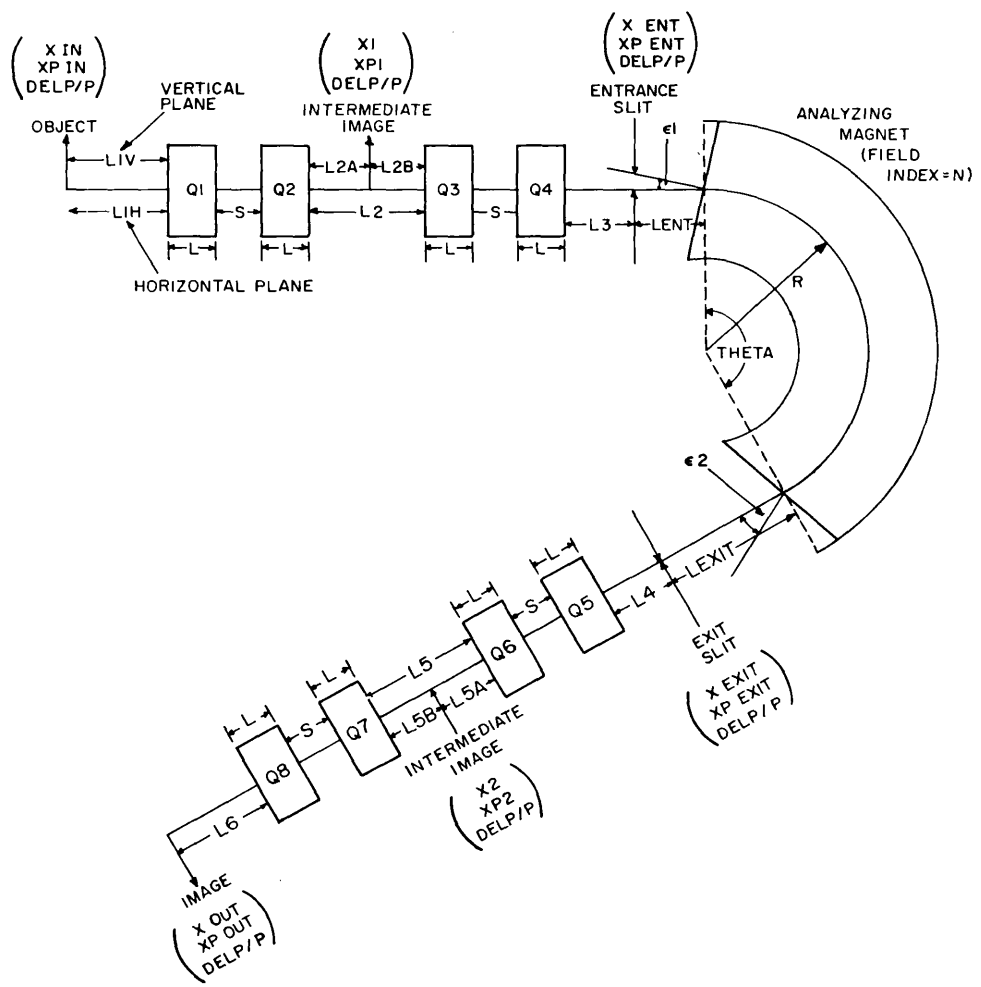

Fig. 8 - Schematic representation of the beam transport system treated in the program QUAD MAG 2. The notation used is identical to the notation on the printout from this program. The vectors shown at the object, and the various images, give the notation for the coordinates of the trajectory at these points.

Again, as in the discussion for the subroutine QUAD 4, there is the option of using or not using an intermediate image between the first and second quadrupole doublets of each of the quadrupole subsystems. For an intermediate image between the quadrupole doublets at the input to the analyzing magnet,

$$L2A + L2B = L2, \tag{41}$$

and for no intermediate image L2A and L2B are taken to be a large number ($\approx 10^{13}$). Similarly, for an intermediate image between the quadrupole doublets following the analyzing magnet,

$$L5A + L5B = L5, \tag{42}$$

and for no intermediate image L5A and L5B are taken to be a large number ($\approx 10^{13}$). The test made in the program for an intermediate focus and the convention for printout of the results at the intermediate images have been described in the preceding section.

The quadrupoles preceding the analyzing magnet can have the arrangement CDDC or CDCD, according to whether NARR (Q1-Q4) is 0 or 1; similarly, the quadrupoles following the analyzing magnet can have the arrangement CDDC or CDCD, according to whether NARR (Q5-Q8) is 0 or 1. In the printout the first entry following the word ARRANGEMENT refers to Q1 to Q4, and the second entry refers to Q5 to Q8.

The analyzing magnet has radius of curvature of the optic axis R, field index N ($0 \leqq N < 1$), and angle of deflection THETA. The angles the incident trajectory and the exiting trajectory make with the normal to the pole edge of the magnet are ϵ_1 and ϵ_2, respectively, with the same sign convention as described in the discussion of the subroutine MAG R. There are two modes of operation for this beam transport system. In the dispersive mode NDISP = 0, the quadrupoles preceding the analyzing magnet produce an image on the entrance slit, and the magnet produces an image on the exit slit, which is, in turn, focused by the quadrupoles following the analyzing magnet to produce the final image. It is implicitly assumed that the input data for L ENT and L EXIT are chosen so that the analyzing magnet will produce an image of the entrance slit at the exit slit. For reference, these relations (3,4) are given below for the case $\epsilon_1 = \epsilon_2 = 0$. In these equations L ENT is denoted by ℓ_0 and L EXIT is denoted by ℓ_i. In the horizontal plane (radial plane of the magnet)

$$\ell_i = -\frac{R}{(1-n)^{1/2}} \tan\left[(1-n)^{1/2}\,\vartheta + \tan^{-1}\frac{\ell_0}{R}(1-n)^{1/2}\right], \tag{43}$$

and, in the vertical plane (axial plane of the magnet)

$$\ell_i = -\frac{R}{n^{1/2}} \tan\left[n^{1/2}\,\vartheta + \tan^{-1}\frac{\ell_0}{R}\,n^{1/2}\right], \tag{44}$$

for $n \neq 0$. If $n = 0$ the analyzing magnet has no focusing properties in the axial plane. For the symmetric case $\ell_0 = \ell_i$, and, with $\epsilon_1 = \epsilon_2 = 0$, these relations reduce to

$$\ell_0 = \ell_i = \frac{R}{(1-n)^{1/2}} \cot\left[(1-n)^{1/2}\,\frac{\vartheta}{2}\right] \tag{45}$$

in the horizontal plane and

$$\ell_0 = \ell_i = \frac{R}{n^{1/2}} \cot \left(n^{1/2} \frac{\vartheta}{2}\right) \tag{46}$$

in the vertical plane, for $n \neq 0$. The complete relationships for $\epsilon_1 \neq 0$ and $\epsilon_2 \neq 0$ are given by Bretscher (4). An error in input data for L ENT and L EXIT will be detected by the focal plane check during execution of the program. In this case, HFØCAL PL and VFØCAL PL in the printout will not be in agreement with L6 (≈a few parts in 10^4).

The other mode of system operation is the minimum dispersion mode, NDISP = 1. In this case the quadrupoles preceding the analyzing magnet produce an image of the source at the first principal plane of the magnet in the radial plane. It is shown in Appendix D that, if the object is a point source, all the trajectories of particles leaving the magnet appear to originate from the same point on the optic axis at the second principal plane of the magnet, irrespective of their momenta. Hence, if the object distance for the quadrupoles following the analyzing magnet is taken to be the distance from the second principal plane of the magnet to the entrance of Q5, the beam transport system will have zero dispersion if the object is a point source. In the practical case of an object with small but finite dimensions, calculations show that the dispersion at the image is negligible when the system is operated in the minimum-dispersion mode. This mode is useful when large, well-focused beam currents are required to be transported to an experiment with a potentially highly dispersive system and energy spread at the target is of no consequence.

The coding in this program for the minimum-dispersion mode is valid only if the field index n of the analyzing magnet is 1/2 and if $\epsilon_1 = \epsilon_2 = 0$. There are various options in the way the quadrupoles can be adjusted, so that the beam transport system produces a final image in the vertical plane at the required location without affecting the minimum-dispersion operation of the system. In this program the quadrupoles preceding the magnet are adjusted to produce an image in the vertical plane at the first principal plane of the analyzing magnet, and the object distance in the vertical plane for the quadrupoles following the magnet is taken to be the distance from the entrance of Q5 to the second principal plane of the analyzing magnet.

There is an error stop if NDISP = 1 and $n \neq 1/2$. The associated error message is: MINIMUM DISPERSIØN NØT VALID — N NØT EQ 1/2. There is an additional error stop if NDISP = 1 and n = 1/2 but ϵ_1 and ϵ_2 are not both equal to zero. In this case the error message is: MINIMUM DISPERSIØN NØT VALID — EPS 1 or EPS 2 NØT ZERØ.

Most of the notation in the printout should be clear from the preceding discussion. The phrase MINIMUM DISPERSION is printed below the heading on each page when this mode is selected; the phrase is omitted when the dispersive mode is selected.

The various magnifications printed out are (a) MAG IN = X ENT/X IN, (b) MAG ØUT = X ØUT/X EXIT, and (c) MAG TØTAL = X ØUT/X IN. The maximum excursions of the trajectory in the various quadrupoles are printed out under MAX Q1, etc., and the maximum excursion in the analyzing magnet is printed out under MAX MAG. As before, the various quadrupole strength parameters are printed out for $\Delta p/p = 0$.

The order and format of the data cards for this program are given in Table 5. Particle trajectories are traced NPARAM times in both the horizontal and the vertical planes for NTABLE/2 sets of initial conditions at the object — for each of the NPARAM sets of parameters characterizing the arrangement of quadrupoles and analyzing magnet in the beam transport system. *It is required that NTABLE* ≤ 50 *and even, and NPARAM* ≤ 20.

Table 5
Order and Format of Data for the Program QUAD MAG 2

Column	1	11	21	31	41	51	61	71
Quantity Format	NTABLE I2	NPARAM I2	–	–	–	–	–	–
There are NPARAM sets of the following three data cards.								
Quantity Format	S E10.4	L E10.4	L1H E10.4	L1V E10.4	L2 E10.4	L2A E10.4	L2B E10.4	L3 E10.4
Quantity Format	L4 E10.4	L5 E10.4	L5A E10.4	L5B E10.4	L6 E10.4	NARR (Q1-Q4) I1	NARR (Q5-Q8) I1	NDISP I1
Quantity Format	N E10.4	THETA E10.4	R E10.4	E1 E10.4	E2 E10.4	L ENT E10.4	L EXIT E10.4	
There are NTABLE/2 of the following data cards.								
Quantity Format	X IN E10.4	XP IN E10.4	DELP/P E10.4	For Horizontal Plane				
There are NTABLE/2 of the following data cards.								
Quantity Format	X IN E10.4	XP IN E10.4	DELP/P E10.4	For Vertical Plane				

Note: Each item of data is written in the specified format starting in the indicated column. The values of NTABLE and NPARAM are restricted to NTABLE $\leqq$ 50 and NPARAM $\leqq$ 20. NARR (Q1-Q4) or NARR (Q5-Q8) = 0 refers to arrangement CDDC for the particular quadrupoles, and NARR (Q1-Q4) or NARR (Q5-Q8) = 1 refers to the arrangement CDCD for the particular quadrupoles. NDISP = 0 refers to operation in the dispersive mode, and NDISP = 1 refers to operation in the minimum dispersion mode.

A sample run for this program is shown in Appendix E. All lengths for this run are in inches, so that the units for the quadrupole strength parameters are inches^{-1}. The input data for Parameter Set 1 is for operation of the system in the normal or dispersive mode, and Parameter Set 2 is for operation of the system in the minimum-dispersion mode.

ACKNOWLEDGMENTS

Some of the functions and subroutines in this report are based on earlier versions which were coded (in NELIAC-N) in collaboration with Mr. R. B. Theus. Mr. S. Podgor developed the method used to solve the simultaneous equations in the subroutine TWØ QUAD, and he also coded the subroutine.

Many useful discussions were held with Dr. R. O. Bondelid, and his encouragement and support during the course of this work are greatly appreciated.

REFERENCES

1. Penner, S., Rev. Sci. Inst. 32:150 (1961). Some general references on this subject are: "Focusing of Charged Particles," Vols. I and II, Albert Septier, ed., New York and London:Academic Press, 1967; Banford, A.P., "The Transport of Charged Particle Beams," London:E. and F. N. Spon Limited, 1966; Steffen, K.G., "High Energy Beam Optics," Interscience Publishers, New York, 1965

2. Enge, H.A., Rev. Sci. Instr. 30:248 (1959)

3. Judd, D.L., Rev. Sci. Instr. 21:213 (1950)

4. Bretscher, M.M., "Focusing Properties of Inhomogeneous Magnetic Sector Fields," ORNL-2884, Apr. 20, 1960

Appendix A

LIST OF FUNCTIONS AND SUBROUTINES

SUBRØUTINE MX MULT (I,J,K)
SUBRØUTINE ACCUMULT (I,J,K)
SUBRØUTINE DACCUMUL (I,J,K)
SUBRØUTINE MX ZERØ (I)
SUBRØUTINE PUT MX (I,J)
SUBRØUTINE PT MX (I)
FUNCTIØN DETR (I)
FUNCTIØN DØDETR (I)
SUBRØUTINE INVERSE (I,J)
SUBROUTINE DINVERSE (I,J)
SUBRØUTINE VECTØR (X,XP,DELP,I)
SUBRØUTINE F SPACE (X,I)
SUBRØUTINE QUAD C (XK,XL,I)
SUBRØUTINE QUAD D (XK,XL,I)
SUBRØUTINE MAG R (XN,THETA,R,E1,E2,I)
SUBRØUTINE MAG Z (XN,THETA,R,E1,E2,I)
SUBRØUTINE REVERS (I)
FUNCTIØN C QUAD MAX (XK,XL,I)
FUNCTIØN D QUAD MAX (XK,XL,I)
FUNCTIØN R MAG MAX (XN,THETA,R,E1,I)
FUNCTIØN Z MAG MAX (XN,THETA,R,E1,I)
FUNCTIØN FØCAL PL (I)
FUNCTIØN WAIST (X,XP,I)
SUBRØUTINE TWØ QUAD (R,TØL,S,XL,ACD,ADC,B,H1,H2,PCD,PDC)
SUBRØUTINE QUAD 4 (NARR,NPRINT,I)

Appendix B

LISTING OF BASIC FUNCTIONS AND SUBROUTINES

```
      FUNCTION DETR(I)
C   ENTIRE PACKAGE UPDATED 9/18/67
C   SINGLE PRECISION FUNCTION
      TYPE REAL MX
      COMMON/MX/MX(100,3,3)
      DETR=
     U      MX(I,1,1)*(MX(I,2,2)*MX(I,3,3)-MX(I,2,3)*MX(I,3,2))
     1-MX(I,1,2)*
     1 (MX(I,2,1)*MX(I,3,3)-MX(I,2,3)*MX(I,3,1))+MX(I,1,3)*(MX(I,2,1)*
     1MX(I,3,2)-MX(I,2,2)*MX(I,3,1))
      END


      SUBROUTINE  INVERSE(I,J)
C      SINGLE PRECISION INVERSE
      TYPE REAL MX
      COMMON/MX/MX(100,3,3)
      A=  DETR(I)
      IF(A.NE.0)1,2
    1 MX(J,1,1)=(MX(I,2,2)*MX(I,3,3)-MX(I,2,3)*MX(I,3,2))/A
      MX(J,1,2)=(MX(I,1,3)*MX(I,3,2)-MX(I,1,2)*MX(I,3,3))/A
      MX(J,1,3)=(MX(I,1,2)*MX(I,2,3)-MX(I,1,3)*MX(I,2,2))/A
      MX(J,2,1)=(MX(I,2,3)*MX(I,3,1)-MX(I,2,1)*MX(I,3,3))/A
      MX(J,2,2)=(MX(I,1,1)*MX(I,3,3)-MX(I,1,3)*MX(I,3,1))/A
      MX(J,2,3)=(MX(I,1,3)*MX(I,2,1)-MX(I,1,1)*MX(I,2,3))/A
      MX(J,3,1)=(MX(I,2,1)*MX(I,3,2)-MX(I,2,2)*MX(I,3,1))/A
      MX(J,3,2)=(MX(I,1,2)*MX(I,3,1)-MX(I,1,1)*MX(I,3,2))/A
      MX(J,3,3)=(MX(I,1,1)*MX(I,2,2)-MX(I,2,1)*MX(I,1,2))/A
      RETURN
    2 PRINT 3,I
    3 FORMAT(5X,17HERROR IN INVERSE(,I3,8H),DETR=0)
      STOP
      END


      SUBROUTINE MX MULT(I,J,K)
      TYPE REAL MX
      COMMON/MX/MX(100,3,3)
      CALL MX ZERO(K)
      DO1 M=1,3
      DO1 L=1,3
      DO1 N=1,3
    1 MX(K,L,M)=MX(K,L,M)+MX(I,L,N)*MX(J,N,M)
      END
```

```
      SUBROUTINE MX ZERO(I)                                             ION   41
      TYPE REAL MX                                                      ION   42
      COMMON/MX/MX(100,3,3)                                             ION   43
      DO1 J=1,3                                                         ION   44
      DO1 K=1,3                                                         ION   45
    1 MX(I,J,K)=0                                                       ION   46
      END                                                               ION   47

      SUBROUTINE PUT MX(I,J)                                            ION   48
      TYPE REAL MX                                                      ION   49
      COMMON/MX/MX(100,3,3)                                             ION   50
      DO1 L=1,3                                                         ION   51
      DO1 M=1,3                                                         ION   52
    1 MX(J,L,M)=MX(I,L,M)                                               ION   53
      END                                                               ION   54

      SUBROUTINE ACCUMULT(I,J,K)                                        ION   55
C     SINGLE PRECISION SUBROUTINE                                       ION   56
      TYPE REAL MX                                                      ION   57
      COMMON/MX/MX(100,3,3)                                             ION   58
      DIMENSION B(3,3),C(3,3)                                           ION   59
      IF(J.GT.I)1,2                                                     ION   60
    1 DO3 L=1,3                                                         ION   61
      DO3 M=1,3                                                         ION   62
    3 C(L,M)=MX(I,L,M)                                                  ION   63
      L=J-I                                                             ION   64
      DO8 NN=1,L                                                        ION   65
      DO6 IJ=1,3                                                        ION   66
      DO6 IK=1,3                                                        ION   67
      B(IJ,IK)=0                                                        ION   68
      DO6 IL=1,3                                                        ION   69
    6 B(IJ,IK)=B(IJ,IK)+C(IJ,IL)*MX(I+NN,IL,IK)                         ION   70
      DO8 IA=1,3                                                        ION   71
      DO8 IB=1,3                                                        ION   72
    8 C(IA,IB)=B(IA,IB)                                                 ION   73
      DO9 IA=1,3                                                        ION   74
      DO9 IB=1,3                                                        ION   75
    9 MX(K,IA,IB)=C(IA,IB)                                              ION   76
      RETURN                                                            ION   77
    2 PRINT10,I,J,K                                                     ION   78
   10 FORMAT(10X,18HERROR IN ACCUMULT(,2(I3,1H,),I3,1H))                ION   79
      STOP                                                              ION   80
      END                                                               ION   81

      SUBROUTINE PT MX(I)                                               ION   82
      TYPE REAL MX                                                      ION   83
      COMMON/MX/MX(100,3,3)                                             ION   84
      PRINT 1,I,((MX(I,J,K),K=1,3)J=1,3)                                ION   85
    1 FORMAT(5X,3HMX ,I3,5X,3(E13.6,2X)/2(16X,3(E13.6,2X)/)/)           ION   86
      END                                                               ION   87

      FUNCTION DODETR(I)                                                ION   88
C     DOUBLE PRECISION FUNCTION                                         ION   89
C     ALSO CONTAINS FOCAL PL                                            ION   90
      TYPE REAL MX                                                      ION   91
      TYPE DOUBLE B                                                     ION   92
      DIMENSION B(3,3)                                                  ION   93
```

```
      COMMON/MX/MX(100,3,3)                                             ION   94
      DO1 J=1,3                                                         ION   95
      DO1 K=1,3                                                         ION   96
    1 B(J,K)=MX(I,J,K)                                                  ION   97
      DODETR=                                                           ION   98
     1      B(1,1)*(B(2,2)*B(3,3)-B(2,3)*B(3,2))                        ION   99
     Z-B(1,2)*(B(2,1)*B(3,3)-B(2,3)*B(3,1))                             ION  100
     Z+B(1,3)*(B(2,1)*B(3,2)-B(2,2)*B(3,1))                             ION  101
      RETURN                                                            ION  102
      ENTRY FOCAL PL                                                    ION  103
      DODETR  =-MX(I,1,2)/MX(I,2,2)                                     ION  104
      END                                                               ION  105

      SUBROUTINEDINVERSE(I,J)                                           ION  106
C     DOUBLE PRECISION SUBROUTINE                                       ION  107
      TYPE REAL MX                                                      ION  108
      TYPE DOUBLE B                                                     ION  109
      DIMENSION B(3,3) $COMMON/MX/MX(100,3,3)                           ION  110
      A=DODETR(I)                                                       ION  111
      IF(A.NE.0)1,2                                                     ION  112
    1 DO4 K=1,3                                                         ION  113
      DO4 L=1,3                                                         ION  114
    4 B(K,L)=MX(I,K,L)                                                  ION  115
      MX(J,1,1)=(B(2,2)*B(3,3)-B(2,3)*B(3,2))/A                         ION  116
      MX(J,1,2)=(B(1,3)*B(3,2)-B(1,2)*B(3,3))/A                         ION  117
      MX(J,1,3)=(B(1,2)*B(2,3)-B(1,3)*B(2,2))/A                         ION  118
      MX(J,2,1)=(B(2,3)*B(3,1)-B(2,1)*B(3,3))/A                         ION  119
      MX(J,2,2)=(B (1,1)*B(3,3)-B(1,3)*B(3,1))/A                        ION  120
      MX(J,2,3)=(B(1,3)*B(2,1)-B(1,1)*B(2,3))/A                         ION  121
      MX(J,3,1)=(B(2,1)*B(3,2)-B(2,2)*B(3,1))/A                         ION  122
      MX(J,3,2)=(B(1,2)*B(3,1)-B(1,1)*B(3,2))/A                         ION  123
      MX(J,3,3)=(B(1,1)*B(2,2)-B(2,1)*B(1,2))/A                         ION  124
      RETURN                                                            ION  125
    2 PRINT 3,I                                                         ION  126
    3 FORMAT(5X,18HERROR IN DINVERSE(,I3,8H),DETR=0)                    ION  127
      STOP                                                              ION  128
      END                                                               ION  129

      SUBROUTINE REVERS(I)                                              ION  130
      TYPE REAL MX                                                      ION  131
      COMMON/MX/MX(100,3,3)                                             ION  132
      CALL MX ZERO(I)                                                   ION  133
      MX(I,1,1)=MX(I,2,2)=-1.0                                          ION  134
      MX(I,3,3)=1.0                                                     ION  135
      END                                                               ION  136

      SUBROUTINE TWO QUAD(R,TOL,SI,XL,ACDI,ADCI,BI,H1I,H2I,PCD,PDC)     ION  137
       SHF(X) =(EXPF(X)**2 -1.0)/(2.0*EXPF(X))                          ION  138
       CHF(X) =(EXPF(X)**2 +1.0)/(2.0*EXPF(X))                          ION  139
      IF(ABSF(R).EQ.1.0)100,101                                         ION  140
  100 S=SI/XL                                                           ION  141
      ACD=ACDI/XL                                                       ION  142
      B=BI/XL                                                           ION  143
      ADC=ADCI/XL                                                       ION  144
      V=0.5 $ CUT=100.0 $ RUN=0                                         ION  145
      H1=V  $  H2=V                                                     ION  146
C     ITERATE                                                           ION  147
C     EQLAT1                                                            ION  148
   15 TER=0                                                             ION  149
```

```
      C=(H1*ADC+R*TANHF(H1))/(H1*(H1*ADC*TANHF(H1)+R))*S                 ION  150
C     WALK1                                                              ION  151
   17 TH2E=H2*(B+C)/(C*B*H2*H2-1.0) $ H2E=ATANF(TH2E)                    ION  152
      X=(H2E-H2)/H2E $ Y=ABSF(X)                                         ION  153
      IF(Y.GT.TOL)19,21                                                  ION  154
   19 H2=0.5*(H2+H2E) $ TER=TER+1.0 $ GO TO 17                           ION  155
   21 H2=H2E                                                             ION  156
C     EQUAT2                                                             ION  157
      TER=0                                                              ION  158
      D=(H2*B+TANHF(H2))/(H2*(H2*B*TANHF(H2)+1.0))*S                     ION  159
      H1H=H1                                                             ION  160
C     WALK2                                                              ION  161
   23 TH1E=H1*(ACD+R*D)/(H1*H1*ACD*D-R)                                  ION  162
      H1E=ATANF(TH1E)                                                    ION  163
      X=(H1E-H1)/H1E $ Y=ABSF(X)                                         ION  164
      IF(Y.GT.TOL)25,27                                                  ION  165
   25 H1=0.5*(H1+H1E) $ TER=TER+1.0 $ GO TO 23                           ION  166
   27 H1=H1E                                                             ION  167
        RUN=RUN+1.0                                                      ION  168
      X=(H1H-H1)/H1  $ Y=ABSF(X)                                         ION  169
        IF(Y.GT.TOL)29,31                                                ION  170
   29   IF(RUN.LE.CUT)15,77                                              ION  171
C       MAGNIFICATION                                                    ION  172
   31 PDC=   (COSF(H2)-B*H2*SINF(H2))/(CHF(H1)+R*ADC*H1*SHF(H1))         ION  173
      PCD=   (CHF(H2)+B*H2*SHF(H2))/(COSF(H1)-R*ACD*H1*SINF(H1))         ION  174
      H1I=H1/XL                                                          ION  175
      H2I=H2/XL                                                          ION  176
        GO TO 99                                                         ION  177
  101 PRINT 102,R,TOL,SI,XL,ACDI,ADCI,BI                                 ION  178
  102 FORMAT(6X,*ABSOLUTE VALUE OF R NOT EQ 1.0,*                        ION  179
     1/6X,*TWO QUAD(*F4.1,*,*5(E10.3,1H,),E10.3,2H,))                    ION  180
      STOP                                                               ION  181
   77 PRINT 79,R,TOL,SI,XL,ACDI,ADCI,BI                                  ION  182
   79 FORMAT (22H DOES NOT CONVERGE FOR ,3X,                             ION  183
     3    10H TWOQUAD (,7(X,E11.2), 1H),X)                               ION  184
      STOP                                                               ION  185
   99         END                                                        ION  186

      FUNCTION R MAG MAX(XN,THETA,R,E1,I)                                ION  187
C    Z MAG MAX CORRECTED 9/18/67                                         ION  188
C     CONTAINS Z MAG MAX                                                 ION  189
C     THETA,E1, IN DEGREES                                               ION  190
      TYPE REAL MX                                                       ION  191
      COMMON/MX/MX(100,3,3)                                              ION  192
      DIMENSION T(2),X(3)                                                ION  193
      DATA(C1=.1745329252E-01),(C2=.1570796327E01),(C3=.3141592654E01)   ION  194
      IF(MX(I,2,1 ),LT.0.3)1,2                                           ION  195
    1 W3=MX(I,1,1)*TANF(C1*E1)+R*MX(I,2,1)                               ION  196
      W4=SQRTF(1.-XN)*MX(I,1,1)-R*MX(I,3,1)/SQRTF(1.-XN)                 ION  197
      IF(W4.EQ.0)3,4                                                     ION  198
    3 IF(W3.EQ.0)5,6                                                     ION  199
    5 T(1)=0                                                             ION  200
      GO TO 7                                                            ION  201
    6 T(1)=C2                                                            ION  202
      GO TO 7                                                            ION  203
    4 T(1)=ATANF(W3/W4)                                                  ION  204
    7 IF(T(1))8,9,9                                                      ION  205
    8 T(1)=T(1)+C3                                                       ION  206
    9 T(2)=SQRTF(1.-XN)*C1*THETA                                         ION  207
      IF(T(1).GT.T(2))10,11                                              ION  208
   10 J=2 $X(1)=0 $GO TO 20                                              ION  209
   11 J=1                                                                ION  210
   20 X(3)=MX(I,1,1)                                                     ION  211
```

```
      DO 12 K=J,2                                                       ION  212
      C=COSF(T(K))                                                      ION  213
      S=SINF(T(K))                                                      ION  214
   12 X(K)=(C+S*TANF(C1*E1)/SQRTF(1.-XN))*MX(I,1,1)                     ION  215
     C+(R/SQRTF(1.-XN))*S*MX(I,2,1)+(R/(1.-XN))*(1.-C)*MX(I,3,1)        ION  216
      IF(ABSF(X(1)).GT.ABSF(X(2))) 13,14                                ION  217
   13 XMAX=X(1)                                                         ION  218
      GO TO 15                                                          ION  219
   14 XMAX=X(2)                                                         ION  220
   15 IF(ABSF(X(3)).GT.ABSF(X MAX))16,17                                ION  221
   16 XMAX=X(3)                                                         ION  222
   17 RMAGMAX=XMAX                                                      ION  223
      RETURN                                                            ION  224
    2 PRINT 18,I                                                        ION  225
   18 FORMAT(5X,19HR MAG MAX ERROR,MX(,I3,22H,2,1) GREATER THAN 0.3,//  ION  226
     C)                                                                 ION  227
      STOP                                                              ION  228
          ENTRY Z MAG MAX                                               ION  229
      IF(MX(I,2,1).LT.0.3)21,22                                         ION  230
   21 IF(XN.EQ.0)23,24                                                  ION  231
   23 YMAX=(1.-THETA*C1*TANF(E1*C1))*MX(I,1,1)+R*THETA*C1*MX(I,2,1)     ION  232
      IF(ABSF(YMAX).GT.ABSF(MX(I,1,1)))25,26                            ION  233
   25 R MAG MAX=Y MAX                                                   ION  234
      RETURN                                                            ION  235
   26 R MAG MAX=MX(I,1,1)                                               ION  236
      RETURN                                                            ION  237
   24 T(2)=C1*THETA*SQRTF(XN)                                           ION  238
      W3=R*MX(I,2,1)-MX(I,1,1)*TANF(C1*E1)                              ION  239
      W4=SQRTF(XN)*MX(I,1,1)                                            ION  240
      IF(W3.EQ.0 .AND.W4.EQ.0)40,41                                     ION  241
   40 T(1)=0                                                            ION  242
      GO TO 29                                                          ION  243
   41 IF(W4.EQ.0)42,43                                                  ION  244
   42 T(1)=C2                                                           ION  245
      GO TO 28                                                          ION  246
   43 T(1)=ATAN(W3/W4)                                                  ION  247
      IF(T(1))27,28,28                                                  ION  248
   27 T(1)=T(1)+C3                                                      ION  249
   28 IF(T(1).GT.T(2))29,30                                             ION  250
   29 J=2 $X(1)=0 $GO TO 31                                             ION  251
   30 J=1                                                               ION  252
   31 X(3)=MX(I,1,1)                                                    ION  253
      DO 32 K=J,2                                                       ION  254
      S=SINF(T(K))                                                      ION  255
   32 X(K)=(COSF(T(K))-S*TANF(C1*E1)/SQRTF(XN))*MX(I,1,1)               ION  256
     C +R*S*MX(I,2,1)/SQRTF(XN)                                         ION  257
      IF(ABSF(X(1)).GT.ABSF(X(2)))33,34                                 ION  258
   33 YMAX=X(1) $GO TO 35                                               ION  259
   34 YMAX=X(2)                                                         ION  260
   35 IF(ABSF(X(3)).GT.ABSF(YMAX))36,37                                 ION  261
   36 YMAX=X(3)                                                         ION  262
   37 R MAG MAX=YMAX                                                    ION  263
      RETURN                                                            ION  264
   22 PRINT 38,I                                                        ION  265
   38 FORMAT(5X,19HZ MAG MAX ERROR,MX(,I3,22H,2,1) GREATER THAN 0.3,//  ION  266
     C)                                                                 ION  267
      STOP                                                              ION  268
      END                                                               ION  269
```

```
      SUBROUTINE DACCUMUL(I,J,K)                                        I0N  270
      TYPE REAL MX                                                      I0N  271
      COMMON/MX/MX(100,3,3)                                             I0N  272
      DIMENSION A(3,3),B(3,3),C(3,3)                                    I0N  273
      TYPE DOUBLE A,B,C                                                 I0N  274
      IF(J.GT.I)1,2                                                     I0N  275
    1 DO3 L=1,3                                                         I0N  276
      DO3 M=1,3                                                         I0N  277
    3 C(L,M)=MX(I,L,M)                                                  I0N  278
      L=J-I                                                             I0N  279
      DO8 NN=1,L                                                        I0N  280
      DO11 II=1,3                                                       I0N  281
      DO11 JJ=1,3                                                       I0N  282
   11 A(II,JJ)=MX(I+NN,II,JJ)                                           I0N  283
      DO6 IJ=1,3                                                        I0N  284
      DO6 IK=1,3                                                        I0N  285
      B(IJ,IK)=0                                                        I0N  286
      DO6 IL=1,3                                                        I0N  287
    6 B(IJ,IK)=B(IJ,IK)+C(IJ,IL)*A(IL,IK)                               I0N  288
      DO8 IA=1,3                                                        I0N  289
      DO8 IB=1,3                                                        I0N  290
    8 C(IA,IB)=B(IA,IB)                                                 I0N  291
      DO9 IA=1,3                                                        I0N  292
      DO9 IB=1,3                                                        I0N  293
    9 MX(K,IA,IB)=C(IA,IB)                                              I0N  294
      RETURN                                                            I0N  295
    2 PRINT 10,I,J,K                                                    I0N  296
   10 FORMAT(10X,18HERROR IN DACCUMUL(,2(I3,1H,),I3,1H))                I0N  297
      STOP                                                              I0N  298
      END                                                               I0N  299

      SUBROUTINE QUAD C(XK,XL,I)                                        I0N  300
C     CONTAINS QUAD C AND QUAD D                                        I0N  301
      TYPE REAL MX                                                      I0N  302
      COMMON/MX/MX(100,3,3)                                             I0N  303
      SINH(X)=(EXPF(X)-EXPF(-X))*0.5                                    I0N  304
      COSH(X)=(EXPF(X)+EXPF(-X))*0.5                                    I0N  305
      MX(I,1,1)=MX(I,2,2)=COSF(XK*XL)                                   I0N  306
      MX(I,1,2)=(SINF(XK*XL))/XK                                        I0N  307
      MX(I,2,1)=-XK*SINF(XK*XL)                                         I0N  308
    1 MX(I,3,3)=1.                                                      I0N  309
      DO2 J=1,2                                                         I0N  310
    2 MX(I,3,J)=MX(I,J,3)=0                                             I0N  311
      RETURN                                                            I0N  312
      ENTRY QUAD D                                                      I0N  313
      MX(I,1,1)=MX(I,2,2)=COSH(XK*XL)                                   I0N  314
      MX(I,1,2)=SINH(XK*XL)/XK                                          I0N  315
      MX(I,2,1)=XK*SINH(XK*XL)                                          I0N  316
      GO TO 1                                                           I0N  317
      END                                                               I0N  318

      SUBROUTINE F SPACE (X,I)                                          I0N  319
      TYPE REAL MX                                                      I0N  320
      COMMON/MX/MX(100,3,3)                                             I0N  321
      CALL MX ZERO(I)                                                   I0N  322
      DO1 J=1,3                                                         I0N  323
    1 MX(I,J,J)=1.0                                                     I0N  324
      MX(I,1,2)=X                                                       I0N  325
      END                                                               I0N  326
```

```
      SUBROUTINE VECTOR(X,THETA,DELP,I)                                 ION  327
      TYPE REAL MX                                                      ION  328
      COMMON/MX/MX(100,3,3)                                             ION  329
      CALL MX ZERO(I)                                                   ION  330
      MX(I,1,1)=X                                                       ION  331
      MX(I,2,1)=THETA                                                   ION  332
      MX(I,3,1)=DELP                                                    ION  333
      END                                                               ION  334

      SUBROUTINE MAG R(XN,THETA,R,E1,E2,I)                              ION  335
C     CONTAINS MAG Z                                                    ION  336
C     THETA,E1,E2,IN DEGREES                                            ION  337
      TYPE REAL MX                                                      ION  338
      COMMON/MX/MX(100,3,3)                                             ION  339
      DATA(C1=.1745329252E-01)                                          ION  340
      SQ=SQRTF(1.-XN)                                                   ION  341
      S=SINF(SQ*C1*THETA)                                               ION  342
      C=COSF(SQ*C1*THETA)                                               ION  343
      TE1=TANF(E1*C1)                                                   ION  344
      TE2=TANF(E2*C1)                                                   ION  345
      MX(I,1,1)=C+S*TE1/SQ                                              ION  346
      MX(I,1,2)=R*S/SQ                                                  ION  347
      MX(I,1,3)=R*(1.-C)/(1.-XN)                                        ION  348
      MX(I,2,1)=-(S*(SQ-TE1*TE2/SQ)-C*(TE1+TE2))/R                      ION  349
      MX(I,2,2)=C+S*TE2/SQ                                              ION  350
        MX(I,2,3)=S/SQ+TE2*(1.-C)/(1.-XN)                               ION  351
    3 MX(I,3,1)=MX(I,3,2)=0                                             ION  352
      MX(I,3,3)=1.                                                      ION  353
      RETURN                                                            ION  354
      ENTRY MAG Z                                                       ION  355
      SQ=SQRTF(XN)                                                      ION  356
      S=SINF(SQ*C1*THETA)                                               ION  357
      C=COSF(SQ*C1*THETA)                                               ION  358
      TE1=TANF(C1*E1)                                                   ION  359
      TE2=TANF(C1*E2)                                                   ION  360
      MX(I,1,3)=MX(I,2,3)=0                                             ION  361
      IF(XN.NE.0)1,2                                                    ION  362
    1 MX(I,1,1)=C-S*TE1/SQ                                              ION  363
      MX(I,1,2)=R*S/SQ                                                  ION  364
      MX(I,2,1)=-(S*(SQ-TE1*TE2/SQ)+C*(TE1+TE2))/R                      ION  365
      MX(I,2,2)=C-S*TE2/SQ                                              ION  366
      GO TO 3                                                           ION  367
    2 MX(I,1,1)=1.-THETA*C1*TE1                                         ION  368
      MX(I,1,2)=R*THETA*C1                                              ION  369
      MX(I,2,1)=-(TE1+TE2-THETA*C1*TE1*TE2)/R                           ION  370
      MX(I,2,2)=1.-C1*THETA*TE2                                         ION  371
      GOTO3                                                             ION  372
      END                                                               ION  373

      FUNCTION CQUADMAX(XK,XL,I)                                        ION  374
C     CONTAINS D QUAD MAX                                               ION  375
      TYPE REAL MX                                                      ION  376
      COMMON/MX/MX(100,3,3)                                             ION  377
      SINH(X)=(EXPF(X)-EXP(-X))*0.5                                     ION  378
      COSH(X)=(EXPF(X)+EXP(-X))*0.5                                     ION  379
      IF(MX(I,2,1).LT.0.3)1,2                                           ION  380
    1 S=SINF(XK*XL)                                                     ION  381
      C=COSF(XK*XL)                                                     ION  382
      XMAX=MX(I,1,1)*C+MX(I,2,1)*S/XK                                   ION  383
      IF(ABSF(MX(I,1,1)).GT.ABSF(XMAX))3,4                              ION  384
```

```
    3 XMAX=MX(I,1,1)                                                    I0N  385
    4 IF(MX(I,1,1).NE.0)5,10                                            I0N  386
    5 XLMX=ATANF(MX(I,2,1)/(XK*MX(I,1,1)))/XK                           I0N  387
      IF(XLMX.GT.0.AND.XLMX.LT.XL)7,10                                  I0N  388
    7 A=MX(I,1,1)*COSF(XK*XLMX)+MX(I,2,1)*SINF(XK*XLMX)/XK              I0N  389
      IF(ABSF(A).GT.ABSF(XMAX))9,10                                     I0N  390
    9 XMAX=A                                                            I0N  391
   10 CQUAD MAX=XMAX                                                    I0N  392
    6 RETURN                                                            I0N  393
    2 PRINT 11,I                                                        I0N  394
   11 FORMAT(5X,20HC QUAD MAX ERROR,MX(,I3,22H,2,1) GREATER THAN 0.3,//)I0N  395
      STOP                                                              I0N  396
      ENTRY D QUAD MAX                                                  I0N  397
      IF(MX(I,2,1).LT.0.3) 12,13                                        I0N  398
   12 XMAX=MX(I,1,1)*COSH(XK*XL)+MX(I,2,1)*SINH(XK*XL)/XK               I0N  399
      IF(ABSF(MX(I,1,1)).GT.ABSF(XMAX))14,10                            I0N  400
   14 CQUAD MAX=MX(I,1,1)                                               I0N  401
      RETURN                                                            I0N  402
   13 PRINT 15,I                                                        I0N  403
   15 FORMAT(5X,20HD QUAD MAX ERROR,MX(,I3,22H,2,1) GREATER THAN 0.3,//)I0N  404
      STOP                                                              I0N  405
      END                                                               I0N  406


      FUNCTION WAIST(X,XP,I)                                            I0N  407
      TYPE REAL MX                                                      I0N  408
      COMMON/MX/MX(100,3,3)                                             I0N  409
      XSQ=X*X                                                           I0N  410
      XPSQ=XP*XP                                                        I0N  411
      WAIST=-(MX(I,1,1)*MX(I,2,1)*XSQ+MX(I,1,2)*MX(I,2,2)*XPSQ)/        I0N  412
     1(MX(I,2,1)*MX(I,2,1)*XSQ+MX(I,2,2)*MX(I,2,2)*XPSQ)                I0N  413
      END                                                               I0N  414


      SUBROUTINE QUAD 4(NARR,NPRINT,I)                                  I0N  415
      DATA((NC(J),J=1,2)=4HCDDC,4HCDCD),(ND=8H********),                I0N  416
     1 ((JK(J),J=1,2)=2H0H,2H V)                                        I0N  417
      TYPE REAL MX                                                      I0N  418
      COMMON/MX/MX(100,3,3)/Q4/TABLE(50,12),PARAM(8),NTABLE,XKK(4)      I0N  419
      DIMENSION XK(4),        NC(2),JK(2)                               I0N  420
      IF(NARR.EQ.0.OR.NARR.EQ.1.AND.NPRINT.EQ.0.OR.NPRINT.EQ.1)1,100    I0N  421
    1 S =PARAM(1)                                                       I0N  422
      XL=PARAM(2)                                                       I0N  423
      XL1H=PARAM(3)                                                     I0N  424
      XL1V=PARAM(4)                                                     I0N  425
      XL2=PARAM(5)                                                      I0N  426
      XL2A=PARAM(6)                                                     I0N  427
      XL2B=PARAM(7)                                                     I0N  428
      XL3=PARAM(8)                                                      I0N  429
      R=1.0                                                             I0N  430
      TOL=1.0E-6                                                        I0N  431
      W1=W2=0                                                           I0N  432
      CALL TWO QUAD(R,TOL,S,XL,XL1H,XL1V,XL2A,XKK(1),XKK(2),W1,W2)      I0N  433
      CALL TWO QUAD(R,TOL,S,XL,XL2B,XL2B,XL3,XKK(3),XKK(4),W1,W2)       I0N  434
      CALL FSPACE(XL1H,I+12)                                            I0N  435
      CALL FSPACE(S,I+10)                                               I0N  436
      CALL FSPACE(S,I+5)                                                I0N  437
      CALL FSPACE(XL3,I+3)                                              I0N  438
C CHECK FOR INT FOCUS                                                   I0N  439
      IF(XL2A+XL2B.GT.0.9*XL2.AND.XL2A+XL2B.LT.1.1*XL2)3,4              I0N  440
C  INT FOCUS                                                            I0N  441
```

```
    3 CALL FSPACE(XL2A,I+8)                                          I0N  442
      CALL FSPACE(XL2B,I+7)                                          I0N  443
      GO TO 5                                                        I0N  444
C   NO INT FOCUS                                                     I0N  445
    4 CALL MXZERO(I+7)                                               I0N  446
      DO 6 J=1,3                                                     I0N  447
    6 MX(I+7,J,J)=1.0                                                I0N  448
      CALL F SPACE(XL2,I+8)                                          I0N  449
C   START H-PLANE                                                    I0N  450
    5 K=NTABLE-1                                                     I0N  451
      DO 7 J=1,K,2                                                   I0N  452
      DO 14 JJ=1,4                                                   I0N  453
   14 XK(JJ)=XKK(JJ)*(1.0-0.5*TABLE(J,3))                            I0N  454
      CALL QUAD C(XK(1),XL,I+11)                                     I0N  455
      CALL QUAD D(XK(2),XL,I+9)                                      I0N  456
      J3=I+6-2*NARR                                                  I0N  457
      J4=I+4+2*NARR                                                  I0N  458
      CALL QUAD D(XK(NARR+3),XL,J3)                                  I0N  459
      J3=4-NARR                                                      I0N  460
      CALL QUAD C(XK(J3),XL,J4)                                      I0N  461
      CALL VECTOR(TABLE(J,1),TABLE(J,2),TABLE(J,3),I+13)             I0N  462
      CALL MX MULT(I+12,I+13,I)                                      I0N  463
      TABLE(J,9)=CQUADMAX(XK(1),XL,I)                                I0N  464
      CALL MX MULT(I+10,I+11,I+2)                                    I0N  465
      CALL MX MULT(I+2,I,I+13)                                       I0N  466
      TABLE(J,10)=DQUADMAX(XK(2),XL,I+13)                            I0N  467
C   CHECK FOR INT FOCUS                                              I0N  468
      IF(XL2A+XL2B.GT.0.9*XL2.AND.XL2A+XL2B.LT.1.1*XL2)8,9           I0N  469
C   INT FOCUS                                                        I0N  470
    8 CALL MXMULT(I+8,I+9,I)                                         I0N  471
      CALL MXMULT(I,I+13,I+2)                                        I0N  472
      TABLE(J,4)=MX(I+2,1,1)                                         I0N  473
      TABLE(J,5)=MX(I+2,2,1)                                         I0N  474
      CALL MXMULT(I+7,I+2,I)                                         I0N  475
      GO TO 10                                                       I0N  476
C   NO INT FOCUS                                                     I0N  477
    9 CALL ACCUMULT(I+7,I+9,I+2)                                     I0N  478
      CALL MXMULT(I+2,I+13,I)                                        I0N  479
   10 IF(NARR.EQ.0)11,12                                             I0N  480
C   H-PLANE IS CDDC                                                  I0N  481
   11 TABLE(J,11)=D QUADMAX(XK(3),XL,I)                              I0N  482
      CALL MXMULT(I+5,I+6,I+13)                                      I0N  483
      CALL MXMULT(I+13,I,I+2)                                        I0N  484
      TABLE(J,12)=C QUADMAX(XK(4),XL,I+2)                            I0N  485
      GO TO 13                                                       I0N  486
C   H-PLANE IS CDCD                                                  I0N  487
   12 TABLE(J,11)=C QUADMAX(XK(3),XL,I)                              I0N  488
      CALL MX MULT(I+5,I+6,I+13)                                     I0N  489
      CALL MX MULT(I+13,I,I+2)                                       I0N  490
      TABLE(J,12)=D QUADMAX(XK(4),XL,I+2)                            I0N  491
   13 CALL ACCUMULT(I+3,I+12,I)                                      I0N  492
      CALL VECTOR(TABLE(J,1),TABLE(J,2),TABLE(J,3),I+13)             I0N  493
      CALL MX MULT(I,I+13,I+2)                                       I0N  494
      TABLE(J,6)=MX(I+2,1,1)                                         I0N  495
      TABLE(J,7)=MX(I+2,2,1)                                         I0N  496
    7 TABLE(J,8)=TABLE(J,6)/MX(I+13,1,1)                             I0N  497
      CALL QUAD C(XKK(1),XL,I+11)                                    I0N  498
      CALL QUAD D(XKK(2),XL,I+9)                                     I0N  499
      J3=I+6-2*NARR                                                  I0N  500
      J4=I+4+2*NARR                                                  I0N  501
       CALL QUAD D(XKK(NARR+3),XL,J3)                                I0N  502
```

```
      J3=4*NARR                                                         I0N  503
      CALL QUAD C(XKK(J3),XL,J4)                                        I0N  504
      CALL ACCUMULT(I+4,I+12,I+13)                                      I0N  505
      HFP=F0CAL PL(I+13)                                                I0N  506
      CALL MXMULT(I+ 3,I+13,I)                                          I0N  507
C  FINISH H-PLANE                                                       I0N  508
C  START V-PLANE                                                        I0N  509
      D0 15 J=2,NTABLE,2                                                I0N  510
      CALL VECT0R(TABLE(J,1),TABLE(J,2),TABLE(J,3),I+13)                I0N  511
      D0 16 J3=1,4                                                      I0N  512
   16 XK(J3)=XKK(J3)*(1.0-0.5*TABLE(J,3))                               I0N  513
      CALL QUAD D(XK(1),XL,I+11)                                        I0N  514
      CALL QUAD C(XK(2),XL,I+9)                                         I0N  515
      J3=I+6+2*NARR                                                     I0N  516
      J4=I+4+2*NARR                                                     I0N  517
      CALL QUADC(XK(NARR+3),XL,J3)                                      I0N  518
      J3=4*NARR                                                         I0N  519
      CALL QUAD D(XK(J3),XL,J4)                                         I0N  520
      CALL FSPACE(XL1V,I+12)                                            I0N  521
      CALL MXMULT(I+12,I+13,I+1)                                        I0N  522
      TABLE(J,9)=DQUADMAX(XK(1),XL,I+1)                                 I0N  523
      CALL MXMULT(I+10,I+11,I+2)                                        I0N  524
      CALL MXMULT(I+2,I+1,I+13)                                         I0N  525
      TABLE(J,10)=CQUADMAX(XK(2),XL,I+13)                               I0N  526
C  CHECK F0R INT F0CUS                                                  I0N  527
      IF(XL2A+XL2B.GT.0.9*XL2.AND.XL2A+XL2B.LT.1.1*XL2)17,18            I0N  528
C  INT F0CUS                                                            I0N  529
   17 CALL MXMULT(I+8,I+9,I+1)                                          I0N  530
      CALL MXMULT(I+1,I+13,I+2)                                         I0N  531
      TABLE(J,4)=MX(I+2,1,1)                                            I0N  532
      TABLE(J,5)=MX(I+2,2,1)                                            I0N  533
      CALL MXMULT(I+7,I+2,I+1)                                          I0N  534
      G0 T0 19                                                          I0N  535
C  N0 INT F0CUS                                                         I0N  536
   18 CALL ACCUMULT(I+7,I+9,I+2)                                        I0N  537
      CALL MXMULT(I+2,I+13,I+1)                                         I0N  538
   19 IF(NARR.EQ.0)20,21                                                I0N  539
C  H-PLANE IS CDDC                                                      I0N  540
   20 TABLE(J,11)=CQUADMAX(XK(3),XL,I+1)                                I0N  541
      CALL MXMULT(I+5,I+6,I+13)                                         I0N  542
      CALL MXMULT(I+13,I+1,I+2)                                         I0N  543
      TABLE(J,12)=DQUADMAX(XK(4),XL,I+2)                                I0N  544
      G0 T0 22                                                          I0N  545
C  N0 INT F0CUS                                                         I0N  546
   21 TABLE(J,11)=DQUADMAX(XK(3),XL,I+1)                                I0N  547
      CALL MXMULT(I+5,I+6,I+13)                                         I0N  548
      CALL MXMULT(I+13,I+1,I+2)                                         I0N  549
      TABLE(J,12)=CQUADMAX(XK(4),XL,I+2)                                I0N  550
   22 CALL ACCUMULT(I+3,I+12,I+1)                                       I0N  551
      CALL VECT0R(TABLE(J,1),TABLE(J,2),TABLE(J,3),I+13)                I0N  552
      CALL MXMULT(I+1,I+13,I+ 2)                                        I0N  553
      TABLE(J,6)=MX(I+2,1,1)                                            I0N  554
      TABLE(J,7)=MX(I+2,2,1)                                            I0N  555
   15 TABLE(J,8)=TABLE(J,6)/MX(I+13,1,1)                                I0N  556
      CALL QUAD D(XKK(1),XL,I+11)                                       I0N  557
      CALL QUAD C(XKK(2),XL,I+9)                                        I0N  558
      J3=I+6+2*NARR                                                     I0N  559
      J4=I+4+2*NARR                                                     I0N  560
       CALL QUAD C(XKK(NARR+3),XL,J3)                                   I0N  561
      J3=4*NARR                                                         I0N  562
```

```
      CALL QUAD D(XKK(J3),XL,J4)                                        I0N  563
      CALL ACCUMULT(I+4,I+12,I+13)                                      I0N  564
      VFP=F0CAL PL(I+13)                                                I0N  565
      CALL MXMULT(I+ 3,I+13,I+1)                                        I0N  566
C  FINSIH V-PLANE                                                       I0N  567
      IF(NPRINT.EQ.0)23,24                                              I0N  568
   23 RETURN                                                            I0N  569
   24 PRINT 25,NC(NARR+1)                                               I0N  570
   25 F0RMAT(1H1,8HH PLANE=,A4)                                         I0N  571
      PRINT 26,(PARAM(K),K=3,8)                                         I0N  572
   26 F0RMAT(1X,4HL1H=,E13.6,2X,4HL1V=,E13.6,2X,3HL2=,E13.6,2X,4HL2A=,  I0N  573
     1 E13.6,2X,4HL2B=,E13.6,2X,3HL3=,E13.6)                            I0N  574
      PRINT 27,HFP,VFP                                                  I0N  575
   27 F0RMAT(1X,10HHF0CAL PL=,E13.6,3X,10HVF0CAL PL=,E13.6)             I0N  576
      PRINT 28,XL,S,(XKK(J),J=1,4)                                      I0N  577
   28 F0RMAT(1X,6HLQUAD=,F7.3,2X,6HSQUAD=,F7.3,2X,3HK1=,F9.7,2X,3HK2=,  I0N  578
     1 F9.7,2X,3HK3=,F9.7,2X,3HK4=,F9.7)                                I0N  579
      PRINT 29                                                          I0N  580
   29 F0RMAT(1H0,3X,4HX IN,4X,5HXP IN,7X,6HDELP/P,7X,3HX 1,7X,4HXP 1,6X,I0N  581
     1 5HX 0UT,6X,6HXP 0UT,4X,7HMAG 0UT,3X,5HMAX 1,2X,5HMAX 2,2X,       I0N  582
     2 5HMAX 3,2X,5HMAX 4)                                              I0N  583
      K=NTABLE-1                                                        I0N  584
C  CHECK F0R INT F0CUS                                                  I0N  585
      IF(XL2A+XL2B.GT.0.9*XL2.AND.XL2A+XL2B.LT.1.1*XL2)30,31            I0N  586
   30 D0 33 J=1,K,2                                                     I0N  587
      PRINT 32,JK(1),(TABLE(J,M),M=1,12)                                I0N  588
   33 PRINT 32,JK(2),(TABLE(J+1,M),M=1,12)                              I0N  589
      RETURN                                                            I0N  590
   32 F0RMAT(A2,F8.5,1X,2(E11.4,1X),2(F8.5,1X,E11.4,1X),E10.3,1X,       I0N  591
     1  4(F6.3,1X))                                                    I0N  592
   31 D0 34 J=1,K,2                                                     I0N  593
      PRINT 35,JK(1),(TABLE(J,M),M=1,3),ND,ND,(TABLE(J,M),M=6,12)       I0N  594
   34 PRINT 35,JK(2),(TABLE(J+1,M),M=1,3),ND,ND,(TABLE(J+1,M),M=6,12)   I0N  595
      RETURN                                                            I0N  596
   35 F0RMAT(A2,F8.5,1X,2(E11.4,1X),A8,2X,A8,2X,F8.5,1X,E11.4,1X,E10.3, I0N  597
     1  1X,4(F6.3,1X))                                                 I0N  598
  100 PRINT 101                                                         I0N  599
  101 F0RMAT(1X,*QUAD 4 INPUT ERR0R*)                                   I0N  600
      ST0P                                                              I0N  601
      END                                                               I0N  602
```

This page intentionally left blank.

Appendix C

LISTING OF PRØGRAM RUN QUAD 4 AND SAMPLE RUN

This page intentionally left blank.

```
      PROGRAM RUN QUAD 4                                                RQ 4   1
      TYPE REAL MX                                                      RQ 4   2
      COMMON/MX/MX(100,3,3)/Q4/TABLE(50,12),PARAM(8),NTABLE,XKK(4)      RQ 4   3
      DIMENSION XPARAM(10,8),NARR(10)                                   RQ 4   4
      NPARAM=0                                                          RQ 4   5
      READ 1,NTABLE,NPARAM                                              RQ 4   6
    1 FORMAT(2(I2,8X))                                                  RQ 4   7
      DO 2 I=1,NPARAM                                                   RQ 4   8
      READ 3,(XPARAM(I,J),J=1,8)                                        RQ 4   9
    3 FORMAT(8E10.4)                                                    RQ 4  10
    2 READ 4,NARR(I)                                                    RQ 4  11
    4 FORMAT(I1)                                                        RQ 4  12
      K=NTABLE-1                                                        RQ 4  13
      DO 5 I=1,K,2                                                      RQ 4  14
    5 READ 6,(TABLE(I,J),J=1,3)                                         RQ 4  15
    6 FORMAT (3E10.4)                                                   RQ 4  16
      DO 11 I=2, NTABLE, 2                                              RQ 4  17
   11 READ 6,(TABLE(I,J),J=1,3)                                         RQ 4  18
      DO 7 I=1,NPARAM                                                   RQ 4  19
      DO 8 J=1,8                                                        RQ 4  20
    8 PARAM(J)=XPARAM(I,J)                                              RQ 4  21
      CALL QUAD4(NARR(I),1,1)                                           RQ 4  22
      CALL DINVERSE(4,15)                                               RQ 4  23
      CALL MX MULT(15,1,16)                                             RQ 4  24
      HW=WAIST(TABLE(NTABLE-1,1),TABLE(NTABLE-1,2),16)                  RQ 4  25
      CALL MX MULT(15,2,16)                                             RQ 4  26
      VW=WAIST(TABLE(NTABLE,1),TABLE(NTABLE,2),16)                      RQ 4  27
      PRINT 9,TABLE(NTABLE-1,1),TABLE(NTABLE-1,2),HW                    RQ 4  28
    9 FORMAT(1H0,*HWAIST(*E11.4*,*E11.4*)=*E11.4)                       RQ 4  29
    7 PRINT 10,TABLE(NTABLE,1),TABLE(NTABLE,2),VW                       RQ 4  30
   10 FORMAT(1X,*VWAIST(*E11.4*,*E11.4*)=*E11.4)                        RQ 4  31
      END                                                               RQ 4  32
```

H PLANE=CDDC
L1H= 1,033750+002 L1V= 8,013750+002 L2= 2,425000+002 L2A= 1,395000+002 L2B= 1,030000+002 L3= 4,800000+001
HF@CAL PL= 4,799990+001 VF@CAL PL= 4,800055+001
LQUAD= 10,000 SQUAD= 6,000 K1=0,0603652 K2=0,0575107 K3=0,0690860 K4=0,0737387

	X IN	XP IN	DELP/P	X 1	XP 1	X OUT	XP OUT	MAG OUT	MAX 1	MAX 2	MAX 3	MAX 4
H	0.00000	9,0000-003	-0,0000+000	-0,00001	-4,0499-003	0,00000	1,6216-002	0,000+000	0,942	0,704	-0,565	-0.809
V	0.00000	6,0000-004	-0,0000+000	0,00000	-5,4807-003	-0,00000	4,9853-003	-0,000+000	0,577	0,770	-0,570	-0,362
H	0.04900	9,0000-003	-0,0000+000	-0,10890	-4,9572-003	0,02720	2,4100-002	5,550-001	0,991	0,734	-0,827	-1,176
V	0.09800	6,0000-004	-0,0000+000	-0,01073	-6,6517-003	0,01179	6,3341-003	1,203-001	0,694	0,924	-0,702	-0,445
H	0.04900	9,0000-003	8,0000-004	-0,10511	-4,9339-003	0,02463	2,3820-002	5,026-001	0,991	0,734	-0,819	-1,164
V	0.09800	6,0000-004	8,0000-004	-0,00916	-6,6388-003	0,00815	6,2517-003	8,316-002	0,694	0,924	-0,700	-0,443
H	0.04900	9,0000-003	-8,0000-004	-0,11269	-4,9805-003	0,02980	2,4381-002	6,082-001	0,991	0,734	-0,835	-1,187
V	0.09800	6,0000-004	-8,0000-004	-0,01229	-6,6647-003	0,01545	6,4169-003	1,577-001	0,694	0,925	-0,705	-0,446
H	0.04900	9,0000-003	5,0000-005	-0,10866	-4,9558-003	0,02704	2,4082-002	5,518-001	0,991	0,734	-0,826	-1,175
V	0.09800	6,0000-004	5,0000-005	-0,01063	-6,6509-003	0,01156	6,3290-003	1,180-001	0,694	0,924	-0,702	-0,445
H	0.04900	9,0000-003	-5,0000-005	-0,10914	-4,9587-003	0,02736	2,4117-002	5,583-001	0,991	0,734	-0,827	-1,177
V	0.09800	6,0000-004	-5,0000-005	-0,01082	-6,6525-003	0,01202	6,3393-003	1,226-001	0,694	0,924	-0,703	-0,445

HWAIST(4,9000-002, 9,0000-003)= 4,7340+001
VWAIST(9,8000-002, 6,0000-004)= 4,7404+001

H PLANE=CDDC
L1H= 1.033750+002 L1V= 8.013750+002 L2= 2.425000+002 L2A= 1.000000+013 L2B= 1.000000+013 L3= 4.800000+001
HF@CAL PL= 4.799998+001 VF@CAL PL= 4.800003+001
LQUAD= 10.000 SQUAD= 6.000 K1=0.0509522 K2=0.0449194 K3=0.0586736 K4=0.0671556

V	X IN	XP IN	DELP/P	X 1	XP 1	X OUT	XP OUT	MAG OUT	MAX 1	MAX 2	MAX 3	MAX 4
H	0.00000	9.0000-003	-0.0000+000	********	********	-0.00000	-2.1802-002	-0.000+000	0.947	0.807	0.861	1.096
V	0.00000	6.0000-004	-0.0000+000	********	********	0.00000	-6.4039-003	0.000+000	0.551	0.703	0.703	0.448
H	0.04900	9.0000-003	-0.0000+000	********	********	-0.02023	-1.8348-002	-4.128-001	0.995	0.842	0.714	0.903
V	0.09800	6.0000-004	-0.0000+000	********	********	-0.00918	-7.6394-003	-9.368-002	0.662	0.843	0.823	0.523
H	0.04900	9.0000-003	8.0000-004	********	********	-0.01885	-1.8426-002	-3.846-001	0.995	0.842	0.718	0.908
V	0.09800	6.0000-004	8.0000-004	********	********	-0.00744	-7.6202-003	-7.595-002	0.662	0.843	0.823	0.524
H	0.04900	9.0000-003	-8.0000-004	********	********	-0.02160	-1.8269-002	-4.408-001	0.995	0.842	0.710	0.898
V	0.09800	6.0000-004	-8.0000-004	********	********	-0.01092	-7.6586-003	-1.114-001	0.662	0.843	0.822	0.523
H	0.04900	9.0000-003	5.0000-005	********	********	-0.02014	-1.8353-002	-4.111-001	0.995	0.842	0.714	0.903
V	0.09800	6.0000-004	5.0000-005	********	********	-0.00907	-7.6382-003	-9.257-002	0.662	0.843	0.823	0.524
H	0.04900	9.0000-003	-5.0000-005	********	********	-0.02031	-1.8343-002	-4.146-001	0.995	0.842	0.714	0.902
V	0.09800	6.0000-004	-5.0000-005	********	********	-0.00929	-7.6406-003	-9.479-002	0.662	0.843	0.823	0.523

HWAIST(4.9000-002, 9.0000-003)= 4.8143+001
VWAIST(9.8000-002, 6.0000-004)= 4.7733+001

Appendix D

MINIMUM DISPERSION ARRANGEMENT OF QUADRUPOLES AND BENDING MAGNET

Draper* has shown that an arrangement of quadrupoles and a uniform-field bending magnet ($n = 0$) can be used as a dispersionless beam transport system. To achieve this objective Draper adjusts the quadrupoles preceding the magnet to form an image of a point source at the center of the magnet; this image is then the object for the quadrupoles following the magnet. It will be shown that Draper's analysis can be generalized for $n \neq 0$. In this case the quadrupoles preceding the magnet form an image of a point source at the first principal plane of the magnet, and the particles leaving the magnet appear to come from a point source at the second plane of the magnet.

The matrix transformation for the radial plane of the magnet with $\epsilon_1 = \epsilon_2 = 0$ is

$$\begin{pmatrix} X \\ X' \\ \Delta p/p \end{pmatrix} = \begin{pmatrix} \cos\theta & \frac{R}{(1-n)^{1/2}}\sin\theta & \frac{R}{(1-n)}[1-\cos\theta] \\ -\frac{(1-n)^{1/2}}{R}\sin\theta & \cos\theta & \frac{\sin\theta}{(1-n)^{1/2}} \\ 0 & 0 & 1 \end{pmatrix} \begin{pmatrix} X_0 \\ X_0' \\ \Delta p/p \end{pmatrix}, \tag{D1}$$

where $\theta = (1 - n)^{1/2}\,\vartheta$. Consider the trajectory of two particles at the exit of the magnet, as indicated schematically in Fig. D1. The ray described at the exit by

$$\begin{pmatrix} \bar{X} \\ \bar{X}' \\ 0 \end{pmatrix}$$

had initial coordinates at the entrance to the magnet described by

$$\begin{pmatrix} X \\ X_0' \\ 0 \end{pmatrix}.$$

The trajectory described at the exit by

*J.E. Draper, "A Dispersionless Combination of Quadrupole and Wedge Magnets for Deflecting a Beam," CNL-UCD-37, Crocker Nuclear Laboratory, University of California, Davis, Nov. 22, 1965.

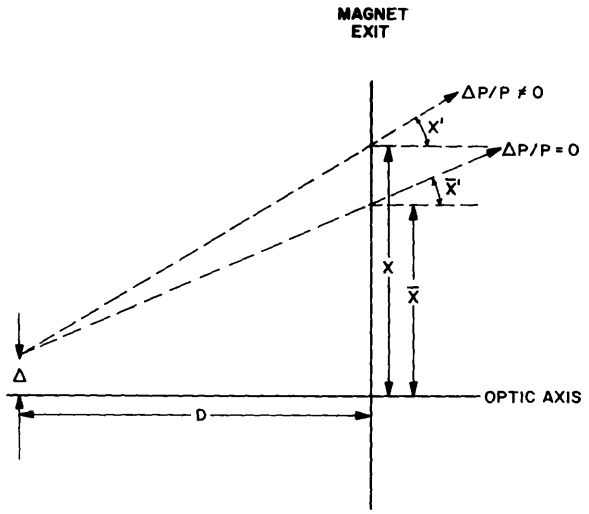

Fig. D1 - Illustration of the quantities used in the discussion of the minimum-dispersion arrangement of a bending magnet and quadrupoles. The particle trajectories with $\Delta p/p = 0$ and $\Delta p/p \neq 0$ appear to come from a common point at a distance D upstream from the exit of the magnet.

$$\begin{pmatrix} X \\ X' \\ \Delta p/p \end{pmatrix}$$

had initial coordinates at the entrance to the magnet described by

$$\begin{pmatrix} X \\ X'_0 \\ \Delta p/p \end{pmatrix}.$$

From Eq. (D1),

$$X = \bar{X} + \frac{\Delta p}{p} \frac{R}{(1 - n)} \left[1 - \cos (1 - n)^{1/2} \vartheta\right] \tag{D2}$$

and

$$X' = \bar{X}' + \frac{\Delta p}{p} \frac{\sin (1 - n)^{1/2} \vartheta}{(1 - n)^{1/2}} . \tag{D3}$$

Extending the two trajectories upstream until they meet at a distance D upstream from the exit of the magnet, as shown in Fig. D1, the relation

$$X - DX' = \bar{X} - D\bar{X}' \tag{D4}$$

is obtained. Thus,

$$D = \frac{X - \bar{X}}{X' - \bar{X}'} = \frac{R}{(1 - n)^{1/2}} \tan \frac{(1 - n)^{1/2} \vartheta}{2} \tag{D5}$$

This result shows that D is identically equal to the distance from the exit of the magnet to the second principal plane of the magnet (4). Thus, any two exit trajectories having the same initial conditions, except that $\Delta p/p = 0$ in one case, and $\Delta p/p \neq 0$ in the other case, when extended upstream from the exit, cross at the second principal plane.

The displacement Δ from the optic axis will now be evaluated. From Fig. D1,

$$\Delta = \bar{X} - D\bar{X}' . \tag{D6}$$

Substituting for $\bar{X}$ and $\bar{X}'$ using Eq. (D1) with $\Delta p/p = 0$ yields

$$\Delta = X_0 + DX_0' . \tag{D7}$$

Now, $\Delta = 0$ for $X = -DX_0'$. This relation will be satisfied for all trajectories at the entrance to the magnet if a point source upstream from the magnet is focused to form a point image at a distance D downstream from the entrance of the magnet, or at the first principal plane of the magnet (3).

Consider all the trajectories that satisfy the condition given in the previous paragraph. The matrix equation for these trajectories in the magnet is

$$\begin{pmatrix} X \\ X' \\ \Delta p/p \end{pmatrix} = (M) \begin{pmatrix} -DX_0' \\ X_0' \\ \Delta p/p \end{pmatrix}, \tag{D8}$$

where the matrix M is the matrix given in Eq. (D1). Carrying out the indicated matrix multiplication, the result can be written

$$X = D \left(X_0' + \frac{\Delta p}{p} \frac{\sin (1 - n)^{1/2} \vartheta}{(1 - n)^{1/2}} \right) \tag{D9}$$

and

$$X' = X_0' + \frac{\Delta p}{p} \frac{\sin (1 - n)^{1/2} \vartheta}{(1 - n)^{1/2}} . \tag{D10}$$

Thus, $X = DX'$ for all $\Delta p/p$. Hence, all trajectories appear to originate at a distance D upstream from the exit of the magnet, on the optic axis of the system, with X' depending on $\Delta p/p$. The various values of $\Delta p/p$ increase the angular divergence for trajectories leaving the magnet, as indicated in Eq. (D10), but they do not introduce dispersion, as the apparent point source inside the magnet can be imaged to a point focus by quadrupoles following the magnet.

In practice, the source is not a point source but is usually quite small. Hence, the conditions for a dispersionless system cannot be exactly achieved. Calculations for examples of interest at the NRL Cyclotron show that dispersion at the image is negligible if the focusing conditions described above are met (see the sample run in Appendix E). Hence, this system is called a "minimum-dispersion system" in our programs.

Appendix E

LISTING OF PRØGRAM QUAD MAG 2 AND SAMPLE RUN

```
      PRØGRAM QUAD MAG 2                                                QM2    1
C     MINIMUM DISPERSIØN ØNLY APPLICABLE TØ N=1/2 AND EPS 1=EPS 2=0     QM2    2
      TYPE REAL MX                                                      QM2    3
      CØMMØN/MX/MX(100,3,3)/Q4/TABLE(50,12),PARAM(8),NTABLE,XKK(4)      QM2    4
      DATA((NRR(I),I=1,2)=4HCDDC,4HCDCD),((ND(J),J=1,2)=2H H,2H V)      QM2    5
     1,(CNRAD=.01745329252)                                             QM2    6
      DIMENSIØN PAR IN(20,8),PAR ØUT(20,8),PAR MAG(20,7),TAB IN(50,12), QM2    7
     1TAB ØUT(50,12),NARR(50,2),XMAG MAX(50),XMAG(50),NRR(2),XXK(8),    QM2    8
     2ND(2),NØDP(20)                                                    QM2    9
C READ IN DATA TØ PARAM TABLES                                          QM2   10
      NDISP=0                                                           QM2   11
      NPARAM=0                                                          QM2   12
      READ 1,NTABLE,NPARAM                                              QM2   13
    1 FØRMAT(2(I2,8X))                                                  QM2   14
      DØ 2 I=1,NPARAM                                                   QM2   15
      READ 3,(PAR IN(I,J),J=1,8)                                        QM2   16
    3 FØRMAT(8E10.4)                                                    QM2   17
      READ 4,(PAR ØUT(I,J),J=4,8),(NARR(I,K),K=1,2),NØDP(I)             QM2   18
    4 FØRMAT(5E10.4,I1,9X,I1,9X,I1)                                     QM2   19
      PAR ØUT(I,3)=PAR ØUT(I,4)                                         QM2   20
      PAR ØUT(I,1)=PAR IN(I,1)                                          QM2   21
      PAR ØUT(I,2)=PAR IN(I,2)                                          QM2   22
    2 READ 5,(PAR MAG(I,J),J=1,7)                                       QM2   23
    5 FØRMAT(7E10.4)                                                    QM2   24
C READ IN H-PLANE INPUT                                                 QM2   25
      K=NTABLE-1                                                        QM2   26
      DØ 6 I=1,K,2                                                      QM2   27
    6 READ 7,(TAB IN(I,J),J=1,3)                                        QM2   28
    7 FØRMAT(3E10.4)                                                    QM2   29
C READ IN V-PLANE INPUT                                                 QM2   30
      DØ 8 I=2,NTABLE,2                                                 QM2   31
    8 READ 7,(TAB IN(I,J),J=1,3)                                        QM2   32
      DØ 101 J=1,NTABLE                                                 QM2   33
  101 TAB ØUT(J,3)=TAB IN(J,3)                                          QM2   34
      DØ 100 I=1,NPARAM                                                 QM2   35
      NDISP=NØDP(I)                                                     QM2   36
C START CALCULATIØN Q1-Q4                                               QM2   37
      DØ 9 L=1,NTABLE                                                   QM2   38
      DØ 9 J=1,3                                                        QM2   39
    9 TABLE(L,J)=TAB IN(L,J)                                            QM2   40
      DØ 10 J=1,8                                                       QM2   41
   10 PARAM(J)=PAR IN(I,J)                                              QM2   42
      IF(NDISP.EQ.0)200,201                                             QM2   43
  201 IF(PAR MAG(I,1).EQ.0.5) 202,203                                   QM2   44
  203 PRINT 204                                                         QM2   45
  204 FØRMAT(* MINIMUM DISPERSIØN NØT VALID--N NØT EQ 1/2*)             QM2   46
      GØ TØ 100                                                         QM2   47
  202 XX=SQRTF(2.0)                                                     QM2   48
      DD       =PAR MAG(I,3)*XX*TANF(PAR MAG(I,2)*XX*CNRAD/4.0)         QM2   49
      PARAM(8)=DD+PAR IN(I,8) + PAR MAG (I,6)                           QM2   50
  220 IF(PAR MAG(I,4).EQ.0.AND.PAR MAG(I,5).EQ.0)200,221                QM2   51
  221 PRINT 222                                                         QM2   52
  222 FØRMAT(* MINIMUM DISPERSIØN NØT VALID--EPS 1 ØR EPS 2 NØT ZERØ*)  QM2   53
      GØ TØ 100                                                         QM2   54
  200 CALL QUAD 4(NARR(I,1),0,1)                                        QM2   55
      DØ 23 J=1,4                                                       QM2   56
```

```
   23 XXK(J)=XKK(J)                                                     QM2   57
      DO 11 L=1,NTABLE                                                  QM2   58
      DO 11 J=4,12                                                      QM2   59
   11 TAB IN(L,J)=TABLE(L,J)                                            QM2   60
      IF(NDISP.EQ.0)206,207                                             QM2   61
  207 CALL DINVERSE(4,100)                                              QM2   62
C     MX 100 INV FSPACE(DD+L3+LENT)                                     QM2   63
      CALL MX MULT(100,1,91)                                            QM2   64
      CALL MX MULT(100,2,92)                                            QM2   65
      CALL FSPACE(PAR IN(I,8),4)                                        QM2   66
      CALL MXMULT( 4 ,91,1)                                             QM2   67
      CALL MXMULT( 4 ,92,2)                                             QM2   68
      DO 205 L=1,NTABLE                                                 QM2   69
      CALL VECTOR(TABLE(L,1),TABLE(L,2),TABLE(L,3),14)                  QM2   70
      CALL VECTOR(TABLE(L,6),TABLE(L,7),TABLE(L,3),3)                   QM2   71
      CALL MX MULT(100,3,80)                                            QM2   72
      CALL F SPACE(PAR IN(I,8),82)                                      QM2   73
      CALL MX MULT(82,80,83)                                            QM2   74
      TAB IN(L,6)=MX(83,1,1)                                            QM2   75
      TAB IN(L,7)=MX(83,2,1)                                            QM2   76
  205 TAB IN(L,8)=TAB IN(L,6)/TAB IN(L,1)                               QM2   77
C START CALCULATION IN MAGNET                                           QM2   78
  206 CALL FSPACE(PARMAG(I,6),39)                                       QM2   79
      CALL PUT MX(39,49)                                                QM2   80
      CALL FSPACE(PAR MAG(I,7),37)                                      QM2   81
      CALL PUT MX(37,47)                                                QM2   82
      CALL MAG R(PAR MAG(I,1),PAR MAG(I,2),PAR MAG(I,3),PAR MAG(I,4),   QM2   83
     1 PAR MAG(I,5),38)                                                 QM2   84
      CALL MAG Z(PAR MAG(I,1),PAR MAG(I,2),PAR MAG(I,3),PAR MAG(I,4),   QM2   85
     A PAR MAG(I,5),48)                                                 QM2   86
      CALL ACCUMULT(37,39,100)                                          QM2   87
      CALL ACCUMULT(47,49,99)                                           QM2   88
C  MX100 CONTAINS H MATRIX                                              QM2   89
C  MX 99 CONTAINS V MATRIX                                              QM2   90
C  START H PLANE                                                        QM2   91
      K=NTABLE-1                                                        QM2   92
      DO 12 J=1,K,2                                                     QM2   93
      CALL VECTOR(TAB IN(J,6),TAB IN(J,7),TAB IN(J,3),40)               QM2   94
      CALL MXMULT(39,40,98)                                             QM2   95
      XMAG MAX(J)=RMAG MAX(PAR MAG(I,1),PAR MAG(I,2),PAR MAG(I,3),      QM2   96
     1 PAR MAG(I,4),98)                                                 QM2   97
      CALL MX MULT(100,40,36)                                           QM2   98
      TAB OUT(J,1)=TABLE(J,1)=MX(36,1,1)                                QM2   99
   12 TAB OUT(J,2)=TABLE(J,2)=MX(36,2,1)                                QM2  100
C START V PLANE                                                         QM2  101
      DO 13 J=2,NTABLE,2                                                QM2  102
      CALL VECTOR(TAB IN(J,6),TAB IN(J,7),TAB IN(J,3),50)               QM2  103
      CALL MX MULT(49,50,98)                                            QM2  104
      XMAG MAX(J)=ZMAG MAX(PAR MAG(I,1),PAR MAG(I,2),PAR MAG(I,3),      QM2  105
     1 PAR MAG(I,4),98)                                                 QM2  106
      CALL MX MULT(99,50,46)                                            QM2  107
      TAB OUT(J,1)=TABLE(J,1)=MX(46,1,1)                                QM2  108
   13 TAB OUT(J,2)=TABLE(J,2)=MX(46,2,1)                                QM2  109
C START CALCULATION Q5-Q8                                               QM2  110
      DO 102 J=1,8                                                      QM2  111
  102 PARAM(J)=PAR OUT(I,J)                                             QM2  112
      IF(NDISP.EQ.0)208,209                                             QM2  113
  209 PARAM(3)=PARAM(4)=DD + PAR OUT(I,3) + PAR MAG(I,7)                QM2  114
  208 CALL QUAD 4(NARR(I,2),0,21)                                       QM2  115
      DO 24 J=1,4                                                       QM2  116
   24 XXK(J+4)=XKK(J)                                                   QM2  117
      DO 14 L=1,NTABLE                                                  QM2  118
      DO 14 J=4,12                                                      QM2  119
   14 TAB OUT(L,J)=TABLE(L,J)                                           QM2  120
```

```
      IF(NDISP.EQ.0)224,223                                             QM2  121
C  START V-PLANE--MIN DISPERSION                                        QM2  122
C  USES SAME LOCATIONS FOR QUAD 4 AS NORMALLY USED                      QM2  123
  223 CALL DINVERSE(33,91)                                              QM2  124
      CALL F SPACE(PAR OUT(I,3),33)                                     QM2  125
      XL=PAR OUT(I,2)                                                   QM2  126
      SUML=PAR OUT(I,6)+PAR OUT(I,7)                                    QM2  127
      XL5=PAR OUT(I,5)                                                  QM2  128
      IF(SUML.LT.1.1*XL5.AND.SUML.GT.0.9*XL5)230,231                    QM2  129
  230 CALL FSPACE(PAR OUT(I,6),29)                                      QM2  130
      CALL F SPACE(PAR OUT(I,7),28)                                     QM2  131
      GO TO 232                                                         QM2  132
  231 CALL F SPACE(XL5,28)                                              QM2  133
      CALL MX ZERO(29)                                                  QM2  134
      DO 233 JJ=1,3                                                     QM2  135
  233 MX(29,JJ,JJ)=1.0                                                  QM2  136
  232 DO 210 L=2,NTABLE,2                                               QM2  137
      DO 225 J=1,4                                                      QM2  138
  225 XKK(J)=XXK(J+4)*(1.0-0.5*TAB IN(I,3))                             QM2  139
      CALL VECTOR(TAB OUT(L,1),TAB OUT(L,2),TAB OUT(L,3),34)            QM2  140
      CALL QUAD D(XKK(1),XL,32)                                         QM2  141
      CALL QUAD C(XKK(2),XL,30)                                         QM2  142
      NP=27-2*NARR(I,2)                                                 QM2  143
      NQ=3+NARR(I,2)                                                    QM2  144
      CALL QUAD C(XKK(NQ),XL,NP)                                        QM2  145
      NP=25+2*NARR(I,2)                                                 QM2  146
      NQ=4-NARR(I,2)                                                    QM2  147
      CALL QUAD D(XKK(NQ),XL,NP)                                        QM2  148
      CALL ACCUMULT(29,34,51)                                           QM2  149
      TAB OUT(L,4)=MX(51,1,1)                                           QM2  150
      TAB OUT(L,5)=MX(51,2,1)                                           QM2  151
      CALL ACCUMULT(24,28,52)                                           QM2  152
      CALL MXMULT(52,51,23)                                             QM2  153
      TAB OUT(L,6)=MX(23,1,1)                                           QM2  154
      TAB OUT(L,7)=MX(23,2,1)                                           QM2  155
      TAB OUT(L,8)=TAB OUT(L,6)/TAB OUT(L,1)                            QM2  156
      CALL MX MULT(33,34,60)                                            QM2  157
C   MX 60 IS VECTOR ENT Q5                                              QM2  158
      CALL MX MULT(31,32,70)                                            QM2  159
      CALL MX MULT(70,60,61)                                            QM2  160
C   MX 61 IS VECTOR ENT Q6                                              QM2  161
      CALL ACCUMULT(28,30,70)                                           QM2  162
      CALL MX MULT(70,61,62)                                            QM2  163
C   MX 62 IS VECTOR ENT Q7                                              QM2  164
      CALL MX MULT(26,27,70)                                            QM2  165
      CALL MX MULT(70,62,63)                                            QM2  166
C   MX 63 IS VECTOR ENT Q8                                              QM2  167
      TAB OUT(L,9)=D QUAD MAX(XKK(1),XL,60)                             QM2  168
      TAB OUT(L,10)=C QUAD MAX(XKK(2),XL,61)                            QM2  169
      IF(NARR(I,2).EQ.0)211,212                                         QM2  170
  211 TAB OUT(L,11)=C QUAD MAX(XKK(3),XL,62)                            QM2  171
      TAB OUT(L,12)=D QUAD MAX(XKK(4),XL,63)                            QM2  172
      GO TO 210                                                         QM2  173
  212 TAB OUT(L,11)=D QUAD MAX(XKK(3),XL,62)                            QM2  174
      TAB OUT(L,12)=C QUAD MAX(XKK(4),XL,63)                            QM2  175
  210 CONTINUE                                                          QM2  176
      CALL MX MULT(22,91,92)                                            QM2  177
      CALL MX MULT(92,33,22)                                            QM2  178
C  START H-PLANE--MIN DISPERSION                                        QM2  179
      NN=NTABLE-1                                                       QM2  180
      DO 215 L=1,NN,2                                                   QM2  181
      DO 226 J=1,4                                                      QM2  182
  226 XKK(J)=XXK(J+4)*(1.0-0.5*TAB IN(I,3))                             QM2  183
      CALL QUAD C(XKK(1),XL,32)                                         QM2  184
      CALL QUAD D(XKK(2),XL,30)                                         QM2  185
      NP=NARR(I,2)+3                                                    QM2  186
      NQ=27-2*NARR(I,2)                                                 QM2  187
      CALL QUAD D(XKK(NP),XL,NQ)                                        QM2  188
      NP=4-NARR(I,2)                                                    QM2  189
```

```
      NQ=25+2*NARR(I,2)                                                 QM2  190
      CALL QUAD C(XKK(NP),XL,NQ)                                        QM2  191
      CALL ACCUMULT(24,28,52)                                           QM2  192
      CALL VECTOR(TAB OUT(L,1),TAB OUT(L,2),TAB OUT(L,3),34)            QM2  193
      CALL ACCUMULT(29,34,51)                                           QM2  194
      TAB OUT(L,4)=MX(51,1,1)                                           QM2  195
      TAB OUT(L,5)=MX(51,2,1)                                           QM2  196
      CALL MX MULT(52,51,23)                                            QM2  197
      TAB OUT(L,6)=MX(23,1,1)                                           QM2  198
      TAB OUT(L,7)=MX(23,2,1)                                           QM2  199
      TAB OUT(L,8)=TAB OUT(L,6)/TAB OUT(L,1)                            QM2  200
      CALL MX MULT(33,34,60)                                            QM2  201
C  MX 60 IS VECTOR ENT Q5                                               QM2  202
      CALL MX MULT(31,32,70)                                            QM2  203
      CALL MX MULT(70,60,61)                                            QM2  204
C  MX 61 IS VECTOR ENT Q6                                               QM2  205
      CALL ACCUMULT(28,30,70)                                           QM2  206
      CALL MX MULT(70,61,62)                                            QM2  207
C  MX 62 IS VECTOR ENT Q7                                               QM2  208
      CALL MX MULT(26,27,70)                                            QM2  209
      CALL MX MULT(70,62,63)                                            QM2  210
C  MX 63 IS VECTOR ENT Q8                                               QM2  211
      TAB OUT(L,9)=C QUAD MAX(XKK(1),XL,60)                             QM2  212
      TAB OUT(L,10)=D QUAD MAX(XKK(2),XL,61)                            QM2  213
      IF(NARR(I,2).EQ.0)216,217                                         QM2  214
  216 TAB OUT(L,11)=D QUAD MAX(XKK(3),XL,62)                            QM2  215
      TAB OUT(L,12)=C QUAD MAX(XKK(4),XL,63)                            QM2  216
      GO TO 215                                                         QM2  217
  217 TAB OUT(L,11)=C QUAD MAX(XKK(3),XL,62)                            QM2  218
      TAB OUT(L,12)=D QUAD MAX(XKK(4),XL,63)                            QM2  219
  215 CONTINUE                                                          QM2  220
      CALL MX MULT(21,91,92)                                            QM2  221
      CALL MX MULT(92,33,21)                                            QM2  222
  224 DO 15 J=1,NTABLE                                                  QM2  223
   15 XMAG(J)=TABIN(J,8)*TAB OUT(J,8)*TAROUT(J,1)/TAB IN (J,6)          QM2  224
      CALL DINVERSE(24,90)                                              QM2  225
      CALL MX MULT(100,1,91)                                            QM2  226
      CALL MX MULT(21,91,92)                                            QM2  227
      CALL MX MULT(90,92,93)                                            QM2  228
      HFP=FOCAL PL(93)                                                  QM2  229
      CALL MX MULT(99,2,93)                                             QM2  230
      CALL MX MULT(22,93,91)                                            QM2  231
      CALL MX MULT(90,91,92)                                            QM2  232
      VFP=FOCAL PL(92)                                                  QM2  233
C START PRINTOUT                                                        QM2  234
      NLINE=0                                                           QM2  235
      NPAGE=1                                                           QM2  236
   46 PRINT 16,I,NPAGE                                                  QM2  237
   16 FORMAT(15H1PARAMETER SET ,I2,3X,5HPAGE ,I2)                       QM2  238
      PRINT 17,(PAR IN(I,J),J=3,8),PAR MAG(I,6)                         QM2  239
   17 FORMAT(5H L1H=,E13.6,2X*L1V =*F13.6,2X,*L2=*E13.6,2X,*L2A=*E13.6, QM2  240
     1 2X,*L2B=*E13.6,2X,*L3=*E13.6,2X,*L ENT=*E13.6)                   QM2  241
      PRINT 18,PAR MAG(I,7),(PAR OUT(I,J),J=4,8)                        QM2  242
   18 FORMAT(8H L EXIT=E13.6,2X,*L4=*E13.6,2X,*L5=*E13.6,2X,*L5A=*E13.6,QM2  243
     A 2X,*L5B=*E13.6,2X,*L6=*E13.6)                                    QM2  244
      N1=NARR(I,1)                                                      QM2  245
      N2=NARR(I,2)                                                      QM2  246
      PRINT 19,PAR IN(I,1),PAR IN(I,2),NRR(N1+1),NRR(N2+1)              QM2  247
   19 FORMAT(9H QUAD--S=,F7.3,2X,*L=*F7.3,2X,*ARRANGEMENT-*A4*,*A4)     QM2  248
      PRINT 20,PAR MAG(I,3),PAR MAG(I,2),PAR MAG(I,1),PAR MAG(I,4),     QM2  249
     1 PAR MAG(I,5)                                                     QM2  250
   20 FORMAT(11H MAGNET--R=,F8.3,2X,*THETA=*F8.3,2X,*N=*F6.3,2X,        QM2  251
     1 *EPSILON 1=*F7.3,2X,*EPSILON 2=*F7.3)                            QM2  252
      PRINT 21,HFP,VFP                                                  QM2  253
```

```
 21 FORMAT(3X,*H FOCAL PL=*E13.6,3X,*V FOCAL PL=*E13.6)                QM2  254
    PRINT 22,(XXK(J),J=1,8)                                            QM2  255
 22 FORMAT(1X,*K1=*F10.6,2X,*K2=*,F10.6,2X,*K3=*F10.6,2X,*K4=*F10.6,2XQM2  256
   A *K5=*F10.6,2X*K6=*F10.6,2X,*K7=*F10.6,2X,*K8=*F10.6)              QM2  257
    IF(NDISP.EQ.0)44,218                                               QM2  258
218 PRINT 219                                                          QM2  259
219 FORMAT(1H0,47X,10(1H*),18HMINIMUM DISPERSION,10(1H*)/)             QM2  260
 44 PRINT 25                                                           QM2  261
 25 FORMAT(1H0,  5X,*X IN*5X*XP IN*6X*DELP/P*5X*X1*8X*XP1*7X*X ENT*4X QM2  262
   1 *XP ENT*4X*X EXIT*4X*XP EXIT*7X*X2*7X*XP2*5X*X OUT*4X*XP OUT*).   QM2  263
    XL2A=PAR IN(I,6)                                                   QM2  264
    XL2B=PAR IN(I,7)                                                   QM2  265
    XL2=PAR IN(I,5)                                                    QM2  266
    XL5=PAR OUT(I,5)                                                   QM2  267
    XL5A=PAR OUT(I,6)                                                  QM2  268
    XL5B=PAR OUT(I,7)                                                  QM2  269
    DO 31 KK=1,2                                                       QM2  270
    JJ=NLINE=NLINE+1                                                   QM2  271
    IF(XL2A+XL2B.LT.1.1*XL2.AND.XL2A+XL2B.GT.0.9*XL2)26,27             QM2  272
 26 IF(XL5A+XL5B.LT.1.1*XL5.AND.XL5A+XL5B.GT.0.9*XL5)28,29             QM2  273
 28 PRINT 30,ND(KK),(TAB IN(JJ,J),J=1,7),(TAB OUT(JJ,J),J=1,2),        QM2  274
   1(TAB OUT(JJ,J),J=4,7)                                              QM2  275
 30 FORMAT(A2,1X,F8.5,1X,2(E10.3,1X),5(F8.5,1X,E10.3,1X))              QM2  276
    GO TO 31                                                           QM2  277
 29 PRINT 32,ND(KK),(TAB IN(JJ,J),J=1,7),(TAB OUT(JJ,J),J=6,7)         QM2  278
 32 FORMAT(A2,1X,F8.5,1X,2(E10.3,1X),3(F8.5,1X,E10.3,1X),8H********,1XQM2  279
   1,10H**********,1X,F8.5,E10.3)                                      QM2  280
    GO TO 31                                                           QM2  281
 27 IF(XL5A+XL5B.LT.1.1*XL5.AND.XL5A+XL5B.GT.0.9*XL5)33,34             QM2  282
 33 PRINT 35,ND(KK),(TAB IN(JJ,K),K=1,3),(TABIN(JJ,K),K=6,7),          QM2  283
   1(TAB OUT(JJ,K),K=1,2),(TAB OUT(JJ,K),K=4,7)                        QM2  284
 35 FORMAT(A2,1X,F8.5,1X,2(E10.3,1X),8H********,1X,10H**********,1X,   QM2  285
   14(F8.5,1X,E10.3,1X))                                               QM2  286
    GO TO 31                                                           QM2  287
 34 PRINT 36,ND(KK),(TAB IN(JJ,K),K=1,3),(TAB IN(JJ,K),K=6,7),         QM2  288
   1(TAB OUT(JJ,K),K=1,2),(TAB OUT(JJ,K),K=6,7)                        QM2  289
 36 FORMAT(A2,1X,F8.5,1X,2(E10.3,1X ),8(1H*),1X,10(1H*),1X,2(F8.5,1X, QM2  290
   A E10.3,1X),                                                        QM2  291
   B     8(1H*),1X,10(1H*),1X,F8.5,1X,E10.3)                           QM2  292
 31 CONTINUE                                                           QM2  293
    PRINT 37                                                           QM2  294
 37 FORMAT(1H0,5X,*MAG IN*,5X,*MAG OUT*,2X,*MAG TOTAL MAX Q1 MAX Q2 MAQM2  295
   1X Q3 MAX Q4  MAX MAG  MAX Q5 MAX Q6 MAX Q7 MAX Q8*)                QM2  296
    NLINE=NLINE-2                                                      QM2  297
    DO 38 KK=1,2                                                       QM2  298
    JJ=NLINE=NLINE+1                                                   QM2  299
 38 PRINT 39,ND(KK),TAB IN(JJ,8),TAB OUT(JJ,8),XMAG(JJ),(TAB IN(JJ,K),QM2  300
   1 K=9,12),XMAGMAX(JJ),(TAB OUT(JJ,K),K=9,12)                        QM2  301
 39 FORMAT(A2,1X,3(E10.3,1X),4(F6.3,1X),1X,F7.3,2X,4(F6.3,1X))         QM2  302
    PRINT 50                                                           QM2  303
 50 FORMAT(1H0,130(1H-))                                               QM2  304
    IF(NLINE.LT.NTABLE)43,100                                          QM2  305
 43 IF(XMODF(NLINE,10).EQ.0)45,44                                      QM2  306
 45 NPAGE=NPAGE+1                                                      QM2  307
    GO TO 46                                                           QM2  308
100 CONTINUE                                                           QM2  309
    END                                                                QM2  310
```

PARAMETER SET 1 PAGE 1
L1H= 1.033750+002 L1V = 8.013750+002 L2= 2.425000+002 L2A= 1.000000+013 L2B= 1.000000+013 L3= 4.800000+001 L ENT= 1.388335+002
L EXIT= 1.388335+002 L4= 3.600000+001 L5= 2.850000+002 L5A= 2.090000+002 L5B= 7.600000+001 L6= 7.000000+001
QUAD--S= 6.000 L= 10.000 ARRANGEMENT-CDDC,CDDC
MAGNET--R= 108.000 THETA= 135.000 N= 0.500 EPSILON 1= 0.000 EPSILON 2= 0.000
H FOCAL PL= 6.999984+001 V FOCAL PL= 7.000314+001
K1= 0.050952 K2= 0.044919 K3= 0.058674 K4= 0.067156 K5= 0.076321 K6= 0.066788 K7= 0.069488 K8= 0.069961

	X IN	XP IN	DELP/P	X1	XP1	X ENT	XP ENT	X EXIT	XP EXIT	X2	XP2	X OUT	XP OUT
H	0.04900	0.000+000	-0.000+000	********	**********	-0.02023	3.454-003	0.02023	-3.322-003	-0.19362	-5.728-004	0.08853	7.160-003
V	0.09800	0.000+000	-0.000+000	********	**********	-0.00918	-1.235-003	0.00918	1.295-003	-0.01998	-7.753-004	0.03798	9.923-004

	MAG IN	MAG OUT	MAG TOTAL	MAX Q1	MAX Q2	MAX Q3	MAX Q4	MAX MAG	MAX Q5	MAX Q6	MAX Q7	MAX Q8
H	-4.128-001	4.377+000	1.807+000	0.049	0.035	-0.147	-0.193	0.699	-0.108	-0.085	-0.303	-0.425
V	-9.369-002	4.136+000	3.875-001	0.111	0.140	0.120	0.075	-0.261	0.087	0.143	-0.080	-0.050

	X IN	XP IN	DELP/P	X1	XP1	X ENT	XP ENT	X EXIT	XP EXIT	X2	XP2	X OUT	XP OUT
H	0.04900	0.000+000	8.000-004	********	**********	-0.02041	3.443-003	0.36601	-2.184-003	-3.49945	-1.640-002	1.58537	1.424-001
V	0.09800	0.000+000	8.000-004	********	**********	-0.00892	-1.233-003	0.00892	1.291-003	-0.01877	-7.648-004	0.03539	9.481-004

	MAG IN	MAG OUT	MAG TOTAL	MAX Q1	MAX Q2	MAX Q3	MAX Q4	MAX MAG	MAX Q5	MAX Q6	MAX Q7	MAX Q8
H	-4.166-001	4.331+000	3.235+001	0.049	0.035	-0.147	-0.193	0.771	0.287	0.088	-6.115	-8.625
V	-9.102-002	3.967+000	3.611-001	0.111	0.140	0.120	0.075	-0.261	0.087	0.142	-0.078	-0.049

	X IN	XP IN	DELP/P	X1	XP1	X ENT	XP ENT	X EXIT	XP EXIT	X2	XP2	X OUT	XP OUT
H	0.04900	0.000+000	-8.000-004	********	**********	-0.02004	3.465-003	-0.32556	-4.460-003	3.12265	1.530-002	-1.44102	-1.289-001
V	0.09800	0.000+000	-8.000-004	********	**********	-0.00944	-1.238-003	0.00944	1.300-003	-0.02120	-7.858-004	0.04060	1.037-003

	MAG IN	MAG OUT	MAG TOTAL	MAX Q1	MAX Q2	MAX Q3	MAX Q4	MAX MAG	MAX Q5	MAX Q6	MAX Q7	MAX Q8
H	-4.090-001	4.426+000	-2.941+001	0.049	0.035	-0.147	-0.193	0.653	-0.490	-0.257	5.529	7.806
V	-9.636-002	4.299+000	4.143-001	0.111	0.140	0.120	0.075	-0.262	0.088	0.144	-0.082	-0.051

	X IN	XP IN	DELP/P	X1	XP1	X ENT	XP ENT	X EXIT	XP EXIT	X2	XP2	X OUT	XP OUT
H	0.04900	9.000-003	-0.000+000	********	**********	-0.02023	-1.835-002	0.02023	1.848-002	-0.19362	-2.850-003	0.08853	1.214-002
V	0.09800	6.000-004	-0.000+000	********	**********	-0.00918	-7.639-003	0.00918	7.699-003	-0.01998	-3.718-003	0.03797	2.541-003

	MAG IN	MAG OUT	MAG TOTAL	MAX Q1	MAX Q2	MAX Q3	MAX Q4	MAX MAG	MAX Q5	MAX Q6	MAX Q7	MAX Q8
H	-4.128-001	4.377+000	1.807+000	0.995	0.842	0.714	0.903	-3.801	0.727	0.526	-0.544	-0.781
V	-9.368-002	4.136+000	3.875-001	0.662	0.843	0.823	0.523	-1.583	0.459	0.759	-0.307	-0.203

	X IN	XP IN	DELP/P	X1	XP1	X ENT	XP ENT	X EXIT	XP EXIT	X2	XP2	X OUT	XP OUT
H	0.04900	9.000-003	8.000-004	********	**********	-0.01885	-1.843-002	0.36445	1.968-002	-3.47521	-1.857-002	1.57376	1.464-001
V	0.09800	6.000-004	8.000-004	********	**********	-0.00744	-7.620-003	0.00744	7.669-003	-0.01275	-3.653-003	0.02319	2.283-003

	MAG IN	MAG OUT	MAG TOTAL	MAX Q1	MAX Q2	MAX Q3	MAX Q4	MAX MAG	MAX Q5	MAX Q6	MAX Q7	MAX Q8
H	-3.846-001	4.318+000	3.212+001	0.995	0.842	0.718	0.908	-3.762	1.103	0.700	-6.315	-8.922
V	-7.595-002	3.115+000	2.366-001	0.662	0.843	0.823	0.524	-1.578	0.454	0.753	-0.295	-0.196

PARAMETER SET 1 PAGE 2

L1H= 1.033750+002 L1V = 8.013750+002 L2= 2.425000+002 L2A= 1.000000+013 L2B= 1.000000+013 L3= 4.800000+001 L ENT= 1.388335+002

L EXIT= 1.388335+002 L4= 3.600000+001 L5= 2.850000+002 L5A= 2.090000+002 L5B= 7.600000+001 L6= 7.000000+001

QUAD--S= 6.000 L= 10.000 ARRANGEMENT-CDDC,CDDC

MAGNET--R= 108.000 THETA= 135.000 N= 0.500 EPSILON 1= 0.000 EPSILON 2= 0.000

H FOCAL PL= 6.999984+001 V FOCAL PL= 7.000314+001

K1= 0.050952 K2= 0.044919 K3= 0.058674 K4= 0.067156 K5= 0.076321 K6= 0.066788 K7= 0.069488 K8= 0.069961

	X IN	XP IN	DELP/P	X1	XP1	X ENT	XP ENT	X EXIT	XP EXIT	X2	XP2	X OUT	XP OUT
H	0.04900	9.000-003	-8.000-004	********	**********	-0.02160	-1.827-002	-0.32400	1.728-002	3.09849	1.292-002	-1.42925	-1.230-001
V	0.09800	6.000-004	-8.000-004	********	**********	-0.01092	-7.659-003	0.01092	7.730-003	-0.02726	-3.784-003	0.05296	2.801-003

	MAG IN	MAG OUT	MAG TOTAL	MAX Q1	MAX Q2	MAX Q3	MAX Q4	MAX MAG	MAX Q5	MAX Q6	MAX Q7	MAX Q8
H	-4.408-001	4.411+000	-2.917+001	0.995	0.842	0.710	0.898	-3.844	0.374	0.399	5.246	7.392
V	-1.114-001	4.851+000	5.404-001	0.662	0.843	0.822	0.523	-1.588	0.463	0.766	-0.320	-0.210

	X IN	XP IN	DELP/P	X1	XP1	X ENT	XP ENT	X EXIT	XP EXIT	X2	XP2	X OUT	XP OUT
H	0.04900	9.000-003	5.000-005	********	**********	-0.02014	-1.835-002	0.04174	1.855-002	-0.39903	-3.834-003	0.18231	2.056-002
V	0.09800	6.000-004	5.000-005	********	**********	-0.00907	-7.638-003	0.00907	7.697-003	-0.01952	-3.714-003	0.03704	2.524-003

	MAG IN	MAG OUT	MAG TOTAL	MAX Q1	MAX Q2	MAX Q3	MAX Q4	MAX MAG	MAX Q5	MAX Q6	MAX Q7	MAX Q8
H	-4.111-001	4.368+000	3.721+000	0.995	0.842	0.714	0.903	-3.798	0.750	0.537	-0.905	-1.291
V	-9.257-002	4.083+000	3.780-001	0.662	0.843	0.823	0.524	-1.583	0.458	0.759	-0.307	-0.203

	X IN	XP IN	DELP/P	X1	XP1	X ENT	XP ENT	X EXIT	XP EXIT	X2	XP2	X OUT	XP OUT
H	0.04900	9.000-003	-5.000-005	********	**********	-0.02031	-1.834-002	-0.00129	1.841-002	0.01182	-1.866-003	-0.00538	3.722-003
V	0.09800	6.000-004	-5.000-005	********	**********	-0.00929	-7.641-003	0.00929	7.701-003	-0.02043	-3.723-003	0.03890	2.557-003

	MAG IN	MAG OUT	MAG TOTAL	MAX Q1	MAX Q2	MAX Q3	MAX Q4	MAX MAG	MAX Q5	MAX Q6	MAX Q7	MAX Q8
H	-4.146-001	4.178+000	-1.097-001	0.995	0.842	0.714	0.902	-3.803	0.704	0.515	-0.183	-0.271
V	-9.479-002	4.188+000	3.970-001	0.662	0.843	0.823	0.523	-1.583	0.459	0.760	-0.308	-0.203

PARAMETER SET 2 PAGE 1
L1H= 1.033750+002 L1V = 8.013750+002 L2= 2.425000+002 L2A= 1.000000+013 L2B= 1.000000+013 L3= 4.800000+001 L ENT= 1.388335+002
L EXIT= 1.388335+002 L4= 3.600000+001 L5= 2.850000+002 L5A= 2.090000+002 L5B= 7.600000+001 L6= 7.000000+001
QUAD--S= 6.000 L= 10.000 ARRANGEMENT-CDDC,CDDC
MAGNET--R= 108.000 THETA= 135.000 N= 0.500 EPSILON 1= 0.000 EPSILON 2= 0.000
H FOCAL PL= 6.999934+001 V FOCAL PL= 6.999887+001
K1= 0.050952 K2= 0.044919 K3= 0.038125 K4= 0.038967 K5= 0.049618 K6= 0.050303 K7= 0.069488 K8= 0.069961

**********MINIMUM DISPERSION**********

	X IN	XP IN	DELP/P	X1	XP1	X ENT	XP ENT	X EXIT	XP EXIT	X2	XP2	X OUT	XP OUT
H	0.04900	0.000+000	-0.000+000	********	**********	-0.16351	-3.806-005	0.16351	1.104-003	0.16121	6.370-005	-0.07371	-5.058-003
V	0.09800	0.000+000	-0.000+000	********	**********	0.07179	-3.608-004	-0.07179	-1.070-004	0.01646	5.866-004	-0.03129	-7.901-004

	MAG IN	MAG OUT	MAG TOTAL	MAX Q1	MAX Q2	MAX Q3	MAX Q4	MAX MAG	MAX Q5	MAX Q6	MAX Q7	MAX Q8
H	-3.337+000	-4.508-001	-1.504+000	0.049	0.035	-0.135	-0.162	-0.169	0.204	0.166	0.208	0.289
V	7.325-001	4.358-001	-3.193-001	0.111	0.140	0.120	0.100	-0.057	-0.086	-0.107	0.062	0.039

	X IN	XP IN	DELP/P	X1	XP1	X ENT	XP ENT	X EXIT	XP EXIT	X2	XP2	X OUT	XP OUT
H	0.04900	0.000+000	8.000-004	********	**********	-0.16327	-3.890-005	0.50887	2.229-003	0.16279	-1.153-003	-0.07427	-2.442-003
V	0.09800	0.000+000	8.000-004	********	**********	0.07196	-3.598-004	-0.07196	-1.091-004	0.01606	5.865-004	-0.03031	-7.759-004

	MAG IN	MAG OUT	MAG TOTAL	MAX Q1	MAX Q2	MAX Q3	MAX Q4	MAX MAG	MAX Q5	MAX Q6	MAX Q7	MAX Q8
H	-3.332+000	-1.460-001	-1.516+000	0.049	0.035	-0.134	-0.161	0.199	0.591	0.468	0.082	0.103
V	7.343-001	4.212-001	-3.093-001	0.111	0.140	0.120	0.100	-0.057	-0.087	-0.107	0.061	0.039

	X IN	XP IN	DELP/P	X1	XP1	X ENT	XP ENT	X EXIT	XP EXIT	X2	XP2	X OUT	XP OUT
H	0.04900	0.000+000	-8.000-004	********	**********	-0.16374	-3.720-005	-0.18186	-2.182-005	0.16171	1.289-003	-0.07476	-7.766-003
V	0.09800	0.000+000	-8.000-004	********	**********	0.07162	-3.618-004	-0.07162	-1.050-004	0.01685	5.867-004	-0.03227	-8.043-004

	MAG IN	MAG OUT	MAG TOTAL	MAX Q1	MAX Q2	MAX Q3	MAX Q4	MAX MAG	MAX Q5	MAX Q6	MAX Q7	MAX Q8
H	-3.342+000	4.111-001	-1.526+000	0.049	0.035	-0.135	-0.162	-0.179	-0.183	-0.135	0.339	0.482
V	7.308-001	4.505-001	-3.292-001	0.111	0.140	0.120	0.100	-0.057	-0.086	-0.106	0.062	0.039

	X IN	XP IN	DELP/P	X1	XP1	X ENT	XP ENT	X EXIT	XP EXIT	X2	XP2	X OUT	XP OUT
H	0.04900	9.000-003	-0.000+000	********	**********	0.60897	-2.555-003	-0.60897	-1.414-003	0.16122	2.799-003	-0.07371	-1.104-002
V	0.09800	6.000-004	-0.000+000	********	**********	0.53518	-1.871-003	-0.53518	-1.617-003	0.01646	4.159-003	-0.03129	-2.670-003

	MAG IN	MAG OUT	MAG TOTAL	MAX Q1	MAX Q2	MAX Q3	MAX Q4	MAX MAG	MAX Q5	MAX Q6	MAX Q7	MAX Q8
H	1.243+001	1.210-001	-1.504+000	0.995	0.842	0.651	0.735	-0.413	-0.660	-0.508	0.498	0.717
V	5.461+000	5.846-002	-3.193-001	0.662	0.843	0.823	0.692	-0.311	-0.685	-0.857	0.338	0.224

	X IN	XP IN	DELP/P	X1	XP1	X ENT	XP ENT	X EXIT	XP EXIT	X2	XP2	X OUT	XP OUT
H	0.04900	9.000-003	8.000-004	********	**********	0.61350	-2.555-003	-0.26790	-3.174-004	0.15612	1.571-003	-0.07050	-8.184-003
V	0.09800	6.000-004	8.000-004	********	**********	0.53626	-1.865-003	-0.53626	-1.631-003	0.01359	4.156-003	-0.02463	-2.571-003

	MAG IN	MAG OUT	MAG TOTAL	MAX Q1	MAX Q2	MAX Q3	MAX Q4	MAX MAG	MAX Q5	MAX Q6	MAX Q7	MAX Q8
H	1.252+001	2.632-001	-1.439+000	0.995	0.842	0.655	0.739	0.259	-0.279	-0.211	0.362	0.516
V	5.472+000	4.594-002	-2.514-001	0.662	0.843	0.823	0.693	-0.310	-0.687	-0.859	0.335	0.223

PARAMETER SET 2 PAGE 2
L1H= 1.033750+002 L1V = 8.013750+002 L2= 2.425000+002 L2A= 1.000000+013 L2B= 1.000000+013 L3= 4.800000+001 L ENT= 1.388335+002
L EXIT= 1.388335+002 L4= 3.600000+001 L5= 2.850000+002 L5A= 2.090000+002 L5B= 7.600000+001 L6= 7.000000+001
QUAD--S= 6.000 L= 10.000 ARRANGEMENT-CDDC,CDDC
MAGNET--R= 108.000 THETA= 135.000 N= 0.500 EPSILON 1= 0.000 EPSILON 2= 0.000
H FOCAL PL= 6.999934+001 V FOCAL PL= 6.999887+001
K1= 0.050952 K2= 0.044919 K3= 0.038125 K4= 0.038967 K5= 0.049618 K6= 0.050303 K7= 0.069488 K8= 0.069961

**********MINIMUM DISPERSION**********

	X IN	XP IN	DELP/P	X1	XP1	X ENT	XP ENT	X EXIT	XP EXIT	X2	XP2	X OUT	XP OUT
H	0.04900	9.000-003	-8.000-004	********	**********	0.60443	-2.556-003	-0.95003	-2.510-003	0.16836	4.036-003	-0.07858	-1.399-002
V	0.09800	6.000-004	-8.000-004	********	**********	0.53409	-1.877-003	-0.53409	-1.604-003	0.01932	4.162-003	-0.03796	-2.769-003

	MAG IN	MAG OUT	MAG TOTAL	MAX Q1	MAX Q2	MAX Q3	MAX Q4	MAX MAG	MAX Q5	MAX Q6	MAX Q7	MAX Q8
H	1.234+001	8.271-002	-1.604+000	0.995	0.842	0.647	0.730	-0.602	-1.042	-0.805	0.638	0.923
V	5.450+000	7.107-002	-3.873-001	0.662	0.843	0.822	0.691	-0.311	-0.683	-0.854	0.341	0.226

	X IN	XP IN	DELP/P	X1	XP1	X ENT	XP ENT	X EXIT	XP EXIT	X2	XP2	X OUT	XP OUT
H	0.04900	9.000-003	5.000-005	********	**********	0.60925	-2.555-003	-0.58765	-1.345-003	0.16084	2.722-003	-0.07346	-1.086-002
V	0.09800	6.000-004	5.000-005	********	**********	0.53524	-1.871-003	-0.53524	-1.618-003	0.01628	4.159-003	-0.03087	-2.663-003

	MAG IN	MAG OUT	MAG TOTAL	MAX Q1	MAX Q2	MAX Q3	MAX Q4	MAX MAG	MAX Q5	MAX Q6	MAX Q7	MAX Q8
H	1.243+001	1.250-001	-1.499+000	0.995	0.842	0.651	0.735	-0.401	-0.637	-0.489	0.490	0.704
V	5.462+000	5.768-002	-3.150-001	0.662	0.843	0.823	0.692	-0.311	-0.685	-0.857	0.338	0.224

	X IN	XP IN	DELP/P	X1	XP1	X ENT	XP ENT	X EXIT	XP EXIT	X2	XP2	X OUT	XP OUT
H	0.04900	9.000-003	-5.000-005	********	**********	0.60869	-2.555-003	-0.63029	-1.482-003	0.16160	2.876-003	-0.07397	-1.122-002
V	0.09800	6.000-004	-5.000-005	********	**********	0.53511	-1.871-003	-0.53511	-1.616-003	0.01664	4.159-003	-0.03171	-2.676-003

	MAG IN	MAG OUT	MAG TOTAL	MAX Q1	MAX Q2	MAX Q3	MAX Q4	MAX MAG	MAX Q5	MAX Q6	MAX Q7	MAX Q8
H	1.242+001	1.174-001	-1.510+000	0.995	0.842	0.651	0.734	-0.425	-0.684	-0.526	0.507	0.729
V	5.460+000	5.925-002	-3.235-001	0.662	0.843	0.823	0.692	-0.311	-0.685	-0.857	0.338	0.224

This page intentionally left blank.

Security Classification

DOCUMENT CONTROL DATA - R & D

(Security classification of title, body of abstract and indexing annotation must be entered when the overall report is classified)

1. ORIGINATING ACTIVITY *(Corporate author)* Naval Research Laboratory Washington, D.C. 20390	2a. REPORT SECURITY CLASSIFICATION Unclassified 2b. GROUP

3. REPORT TITLE

FORTRAN PROGRAMS FOR FIRST ORDER CALCULATION OF PROPERTIES OF BEAM TRANSPORT SYSTEMS

4. DESCRIPTIVE NOTES *(Type of report and inclusive dates)*

A final report on one phase of the problem.

5. AUTHOR(S) *(First name, middle initial, last name)*

Philip Shapiro

6. REPORT DATE June 20, 1968	7a. TOTAL NO. OF PAGES 62	7b. NO. OF REFS 4
8a. CONTRACT OR GRANT NO. NRL Problem H01-23 b. PROJECT NO. RR 002-06-41-5008 c. d.	9a. ORIGINATOR'S REPORT NUMBER(S) NRL Report 6710 9b. OTHER REPORT NO(S) *(Any other numbers that may be assigned this report)* Cyclotron Report 4	

10. DISTRIBUTION STATEMENT

This document has been approved for public release and sale; its distribution is unlimited.

11. SUPPLEMENTARY NOTES	12. SPONSORING MILITARY ACTIVITY Department of the Navy (Office of Naval Research), Washington, D.C. 20360

13. ABSTRACT

A set of FORTRAN functions and subroutines has been written to facilitate calculations, using matrix techniques, of the first order properties of ion-optical systems for particle accelerators. These functions and subroutines generate matrices for various magnetic elements used in ion-optical systems and also program various matrix manipulations. A subroutine to calculate the strength of magnetic quadrupoles required to achieve prescribed focal conditions is available. Functions used to calculate the maximum excursion of a particle trajectory from the optic axis in a magnetic element, to calculate the waist of a particle beam if the emittance satisfies certain conditions, and to calculate the location of the focal plane for an arbitrary ion-optical arrangement have been written.

Programs can be written, using these functions and subroutines, to calculate the properties of particular ion-optical systems. Illustrative coding shows how such programs are written.

PRØGRAM RUN QUAD 4 may be used to calculate the properties of an arrangement of two quadrupole doublets. It has been useful for calculations on the NRL Cyclotron Beam Transport System. Included in PRØGRAM RUN QUAD 4 is a subroutine, SUBRØUTINE QUAD 4, which can be used as a building block for writing

(over)

DD FORM 1 NOV 65 1473 (PAGE 1)

S/N 0101-807-6801

Security Classification

Security Classification

14. KEY WORDS	LINK A ROLE	LINK A WT	LINK B ROLE	LINK B WT	LINK C ROLE	LINK C WT
Cyclotron						
Beam transport system						
Ion-optical system						
Fortran programs						
Bending magnets						
Quadrupole magnets						
Particle beams						
Ion beams						
Focusing						
Energy analysis						

programs for a system which includes two quadrupole doublets in succession. PROGRAM QUAD MAG 2 is used to calculate the properties of a system of two quadrupole doublets, preceding a bending magnet, which is followed by two more quadrupole doublets. This arrangement of quadrupoles and a bending magnet can be used in both a dispersive mode and a minimum-dispersion mode.