NRL Report 6676

The Effect of a Second Mode and Nearby Structures on Shock Design Values

G. J. O'Hara and L. P. Petak

Ocean Structures Branch
Ocean Technology Division

April 5, 1968

NAVAL RESEARCH LABORATORY
Washington, D.C.

This document has been approved for public release and sale; its distribution is unlimited.

CONTENTS

Abstract	ii
Problem Status	ii
Authorization	ii
SYMBOLS	1
INTRODUCTION	1
Shock Spectra	1
Derivation of Design-Shock Spectrum Values	2
Present Investigation	3
INVESTIGATION OF DESIGN SHOCK VALUES	4
Basic Problem	4
Two-Mode Structure	7
A Nearby Structure	14
SUMMARY	19
REFERENCES	21
APPENDIX A — Analysis of a Subsystem with Base-Motion Input	22

ABSTRACT

A dynamic design-analysis method developed at NRL for shipboard equipment requires the use of design-shock spectrum values, which provide appropriate input data. These design values are derived from measured data of a number of realistic shock tests. Theoretical and experimental investigations of the past provided insight which has resulted in a set of design data for use with the design-analysis method; these are the presently specified inputs, and studies continue to improve them. The investigation reported here attempts to show the effects upon design-shock spectrum values of a second mode and a nearby structure. This is done by comparing the design-shock spectrum value of a simple, single-degree-of-freedom structure with the design spectrum values obtained for a two-mode structure and with the design value obtained when another simple structure is placed adjacent to the original one. The results indicate that for a wide range of weight and frequency parameters the design spectrum value obtained using a simple model is not greatly sensitive to the effects of multimodes and adjacent structures and, thus, sufficiently defines the appropriate input value. However, for certain ranges of the weight and frequency parameters, gross differences can occur between the design values for the simple system and those of the more complex systems.

PROBLEM STATUS

This is an interim report; work on the problem is continuing.

AUTHORIZATION

NRL Problem F02-05
Project SF013-10-05-11655

Manuscript submitted November 29, 1967.

THE EFFECT OF A SECOND MODE AND NEARBY STRUCTURES ON SHOCK DESIGN VALUES

SYMBOLS

α, β, γ	subsystem frequencies
p, ω_i, ϕ_i	system frequencies
ω	frequency of tunable oscillator used for calculating shock spectra
q	nondimensional frequency
m_1, m_2, M_1, M_2	subsystem masses
M_0	base mass
μ, n, θ, w	nondimensional mass ratios
k_i, K_i	spring constants
Y_i	absolute displacement of subsystem masses
Z	absolute displacement of base
X_i	relative displacement between subsystem masses and base
r	relative displacement of tunable oscillator used for calculating shock spectra
R, S	ratio of design-shock spectrum values
I_0	impulse applied to base mass
V_0	velocity step of base mass due to impulse
t	time

INTRODUCTION

Shock Spectra

For many years engineers have used shock spectra as an aid in understanding the damaging potential of shock and as a tool for stress-checking a structure whose base was subjected to the transient for which the spectrum was found. The shock spectrum gives, in convenient graphical form, the maximum responses of single-degree-of-freedom systems to the applied foundation motion, and these responses are directly related to the modal responses of multidegree-of-freedom real structures.

In 1943 Biot (1) attempted to clarify the then-present thinking among engineers interested in the effects of an earthquake upon large structures by defining a quantity called "effective acceleration of the earthquake for the period T." This definition helped the present-day concept of an earthquake spectrum to evolve. Sometime later, in 1948, Walsh and Blake (2) considered mechanical shock using the concept of an earthquake spectrum, and the result has generally come to be known as shock spectrum.

Since shock spectrum is a term which various authors have used in different ways, it is perhaps necessary to state explicitly its meaning as used in this report. A shock spectrum is the plot of the maximum absolute values of the relative displacements, multiplied by appropriate scaling factors, of a set of either damped or undamped single-degree-of-freedom oscillators with negligible mass, which have been subjected to a base shock motion, the values being plotted as a function of the natural frequencies of the simple oscillators. These graphs can be constructed with units of displacement, velocity, or equivalent static acceleration by the choice of the scaling factors unity, ω, or ω^2/g, respectively, where ω is the angular frequency of the oscillator. The reason these shock spectra are defined in terms of relative response is due to their ultimate use — the determination of the stresses or stresses or strains in the flexible members of the system. In this report, undamped shock spectra in velocity units are used.

Since the introduction of this idea, the use of shock spectra has spread, and several theories for the use of these spectra have arisen.

NRL has developed a Dynamic Design Analysis Method (DDAM) (3) for the calculation of the stresses and deflections that would be produced in a contemplated equipment by a shock of assigned characteristics. The equipment of most concern is that which is impractical to shock test for reasons of weight, shape, size, etc. The DDAM is basically a modal analysis method with shock design inputs empirically derived from data obtained during underwater-explosion tests on realistic ship and submarine installations and reinforced by information from theoretical and experimental studies in the laboratory. It is assumed that an equipment and its foundation together make up a system which responds as a linear elastic structure to an excitation at its base.* The modal responses are calculated using the response spectrum technique, with the required spectral inputs specified by design shock values, which are obtained from the shock spectra of test data.

The design shock spectrum is an array of the input values which enables an analyst using the DDAM to predict the stresses, etc., in a contemplated structure for a specific type of excitation, such as depth charge attack. The set of input values from which the array is obtained is evolved empirically and is composed of appropriate values obtained from the shock spectra resulting from a number of real shocks to similar equipments. This spectrum (array) of design values is then a concept rather than a measurable quantity. It should not be confused with the ordinary, "measured" shock spectrum which was defined previously.

Derivation of the Design-Shock Spectrum Values

Great difficulty has plagued those who have sought to use shock spectra obtained from realistic shock tests when some sort of combinatorial analysis of these spectra has been employed to provide design values representing many possible shocks to more or less similar equipments and bases. A popular type of combinatorial analysis is to first form classes of shock spectra as to severity of excitation and to subdivide these classes into groups according to equipment weight and location. For each group the maxima of its shock spectra are plotted (fly-speck style), and an envelope curve drawn. However,

*Appendix A contains background on this concept.

this type of analysis is incorrect; it defines a shock input which is extremely severe and which few structures could withstand. Even though in-place structures survived the field trials from which the shock spectra were obtained, the design curves derived from these shock spectra by an envelope-type analysis indicate that they should have failed.

The major assumption employed in this use of experimentally obtained shock spectra to synthesize a design shock spectrum is that the spectra for the same classes of shock are unaffected by variations of the stiffnesses of structures being subjected to the shock as long as the weights of the structures remain reasonably close. Inherent in this assumption is the following idea: the mobility of the base is negligible over the entire frequency range when compared with the structure's mobility. This assumption means that the dynamic reaction of the structure upon its base is unable to affect the motion of the base and that dissimilar structures will have to respond to the same input motion. This assumption is not valid for the shipboard situation, where equipments have relatively flexible supporting structures. Also, it is assumed that over a wide range of possible shocks to these structures the most severe condition to which a structure would ever be subjected is the envelope of the maxima of all possible shock spectra or some lesser value determined by the use of statistical fiducial limit curves. The design-shock spectrum values based on these assumptions are so severe that few structures could withstand the shock corresponding to these inputs.

The problem of the overconservatism associated with this type of analysis was investigated at NRL, and it was noted that the normal-mode theory of dynamic response requires only the shock spectrum values at the fixed-base natural frequencies* of the structure in place during the shock motion to compute stresses in that structure. An examination of individual shock spectra in this regard showed deep valleys in the region of these fixed-base frequencies. This effect was labeled "shock spectrum dip" and was investigated (4-7) theoretically and experimentally.

Now, consider again the problem of trying to formulate a set of design-shock spectrum values. Theoretically, the only values of a shock spectrum obtained from shock test data which are meaningful for dynamic response calculations are those which correspond to the fixed-base natural frequencies of the structure which was in place during the shock motion. However, an analyst requires some shock design value (or values) to design-check a contemplated structure which has never been subjected to a shock and for which, consequently, no shock spectrum exists. It would seem that the first step in obtaining the desired shock design values might be to compare the shock-spectrum magnitude at the fixed-base natural frequencies of structures in place during a measured shock motion with the magnitudes of the spectrum in general. The knowledge acquired from this comparison might then allow the designer to obtain input values which could be useful in future designs. An attempt to do this analysis on an imaginary class of structures subjected to the same type of shock was the subject of an NRL report (8). The insight gained from these theoretical and experimental investigations was applied to considerable field data and has resulted in the design inputs (9) presently specified by the Navy for use with the NRL-developed DDAM. Continuing studies are being performed so that these design values may be improved as the state of the art advances.

Present Investigation

One of the simple structures analyzed in Ref. 8 "Shock Spectra and Design Shock Spectra," was used as the basis for this investigation. The analysis demonstrating the

*A fixed-base natural frequency is the frequency which a structure would have if its base were infinitely stiff and heavy, so that the base motion would be unaffected by the structure's reaction.

difference between the ordinary shock spectrum and the shock spectrum values used for design is presented again for those who are unfamiliar with the concept. In this report the design value thus derived for the simple model is compared with (a) those obtained when the simple structure is replaced by one having two natural modes and (b) those obtained when a second structure is mounted adjacent to the structure of interest. This comparison is done by computing the ratio of the design value obtained from the more complex system to the design value obtained from the simple structure and then plotting this ratio for varying values of appropriate weight and frequency parameters. Observing the trends of this ratio with parameter variation provides some insight into the sensitivity of design-shock spectrum values to modal effects and effects of nearby structures.

INVESTIGATION OF DESIGN SHOCK VALUES

Basic Problem

To illustrate the difference between ordinary shock spectra and design-shock spectrum values, the simple, undamped free-free structure of Fig. 1 was chosen. M_0 is considered to be the base, and M_1 the mass of the equipment structure. Let M_0 be subjected to an impulse I_0. The problem is: What is the design-shock spectrum value for the equipment consisting of M_1 and K for the shock loading I_0?

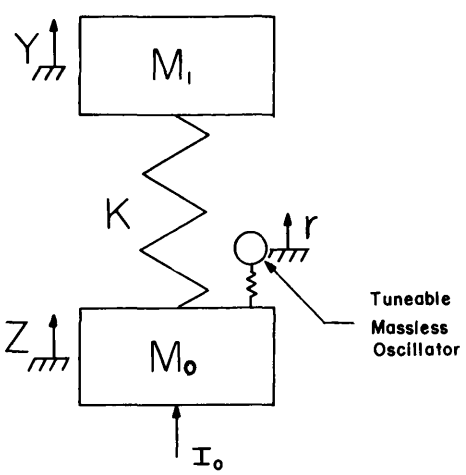

Fig. 1 - Undamped free-free system

The differential equations of motion for the system are

$$M_1 \ddot{Y} + KY - KZ = 0 \tag{1a}$$

and

$$-KY + M_0 \ddot{Z} + KZ = 0, \tag{1b}$$

for which the initial condition at $t = 0$ is

$$\dot{Z} = V_0 = \frac{I_0}{M_0} .$$

With the notations

$$X = Y - Z, \qquad \frac{M_1}{M_0} = \mu = \frac{\beta^2}{\alpha^2} ,$$

$$\frac{K}{M_0} = \beta^2, \qquad \frac{K}{M_1} = \alpha^2,$$

and

$$\alpha^2 + \beta^2 = p^2 ,$$

the solution of Eqs. (1) becomes

$$X = -\frac{V_0}{p} \sin pt . \tag{2}$$

The maximum value of this relative displacement is

$$X = \frac{V_0}{\alpha \sqrt{1 + \mu}} , \tag{3}$$

which will be the design parameter. By varying the value of M_1, the designer can keep the relative displacement X within a specified limit for a given initial velocity.

When the displacement is scaled for velocity and made dimensionless, it becomes

$$\frac{X\alpha}{V_0} = \frac{1}{\sqrt{1+\mu}}; \tag{4}$$

this scaling permits comparison with ordinary shock spectra, which are in velocity units. This parameter is seen to be independent of frequency; Fig. 2 is a plot which shows how it varies with the mass ratio μ. Once the mass distribution between the equipment and its base is known, Fig. 2 may be used to determine the value of $X\alpha/V_0$, which then becomes the design value. Since each of these values is independent of frequency, the spectra of the design shock values in the $X\alpha/V_0$-vs-frequency plane would be a family of horizontal straight lines, one line for each mass ratio. Each of these horizontal lines would provide design values for systems like Fig. 1 but differing as to K.

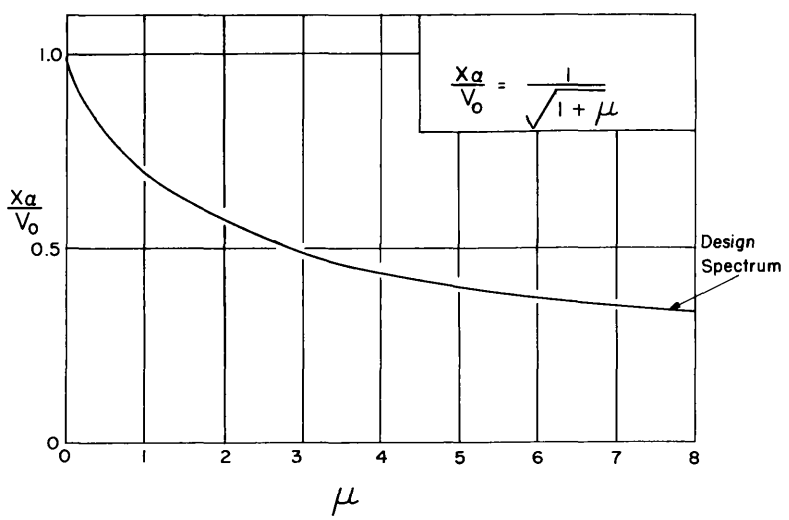

Fig. 2 - Variation of the design shock values with mass ratio for the undamped free-free system of Fig. 1

Now, suppose by means of the theoretical tuneable oscillator of negligible mass, an ordinary shock spectrum is obtained for the motion of M_0. The relative displacement of this oscillator times the angular frequency divided by the initial velocity of M_0 becomes

$$\frac{r\omega}{V_0} = \frac{\omega\beta^2}{p(\omega^2 - p^2)} \sin pt + \frac{(\alpha^2 - \omega^2)}{(\omega^2 - p^2)} \sin \omega t, \tag{5}$$

where ω is the frequency of the tuneable oscillator and r is the displacement relative to M_0. This equation can be derived by noting that the theoretical massless oscillator will not affect the base motion and by solving the Duhamel integral

$$r = -\int_0^t \dot{Z}(t) \cos \omega(t - T)\, dT. \tag{6}$$

It is of immediate interest to examine Eq. (5) closely. The oscillation is composed of two components — one of frequency p (the natural frequency of the system as a whole) and one of frequency ω (the frequency of the massless oscillator). When ω equals α, the oscillation at this frequency α (that is, the second term in Eq. 5) vanishes, which means that the massless oscillator undergoes the same motion as the mass M_1, and in this case even though the massless oscillator is tuned to the frequency α, it has no component of this frequency in its motion. It is also seen that ω equals α is the only frequency at which this occurs.

Since the shock spectrum is the envelope of Eq. (5), it may be written as

$$\left|\frac{r\omega}{V_0}\right|_{max} = \left|\frac{\omega\beta^2}{p(\omega^2 - p^2)}\right| + \left|\frac{\alpha^2 - \omega^2}{\omega^2 - p^2}\right| . \tag{7}$$

As the value of ω approaches the system is natural frequency p, the shock spectrum value becomes infinite; however, as ω approaches α, the fixed-base frequency of the equipment structure, the shock spectrum value, becomes $1/\sqrt{1+\mu}$. This is exactly the design-shock spectrum value derived previously for the equipment structure.

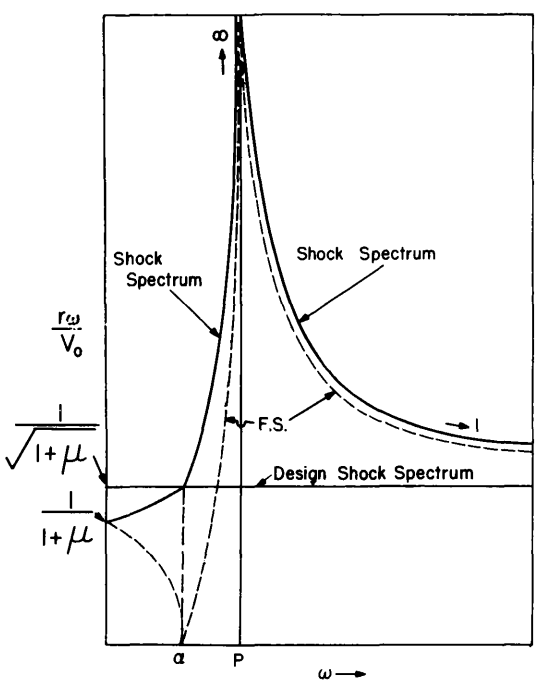

Fig. 3 - A theoretical shock spectrum and the design shock spectrum of the free-free system of Fig. 1 for a specific mass ratio

Figure 3 contains a superposed plot of the design shock spectrum for some specific mass ratio and the ordinary shock spectrum of Eq. (7) obtained for a system with that mass ratio. The curve labeled F.S. is the plot of the maximum values of the $\sin \omega t$ component of Eq. (5). The design shock spectrum is a horizontal line of height $1/\sqrt{1+\mu}$, while the ordinary shock spectrum for the system obtained on the base M_0 is below the design shock spectrum to frequency α and then is always above it. It should be noted that the design shock spectrum and the ordinary shock spectrum meet only at one point, the fixed-base natural frequency α of the upper equipment system. The shock-spectrum value at this point is the only one which is applicable to the design of the equipment system. This point occurs where the coefficient of the frequency term of the massless oscillator vanishes (curve labeled F.S.). In any system with damping the large peak would have a limit, but it could be several times higher than the design value.

Figure 4 includes a sketch of the shock spectra for two systems having the same mass ratio. The spring in system 2 was chosen so that the fixed-base natural frequency of the simulated structure α', coincided with the natural frequency p of system 1. Since the two systems have the same mass ratio μ, their design spectrum values are the same, and they lie on the horizontal line in Fig. 4. The envelope line for the two spectra is marked. This envelope is an example of the envelope obtained for design purposes by combining the shock spectra from a number of shock-tested equipments.

Now, suppose that at some time in the future one would have to design-analyze a system exactly like system 2. The shock design value is, of course, $1/\sqrt{1+\mu}$. However, if one would obtain a design value by considering the envelope of the shock spectra from equipments shock tested previously, the magnitude of the example envelope at $\omega = \alpha'$ would give a very large design-shock spectrum value for the system α'. It is clear that this very large value would not be the correct design value.

If many shock spectra were combined in the manner shown and an envelope or high fiducial limit curve drawn, it is apparent that this would represent a totally unreasonable approximation to the proper design inputs. However, as can be seen in Fig. 4, if each shock spectrum was read at the appropriate frequency, the fixed-base frequency of the equipment system, these values would constitute an array of the proper design inputs.

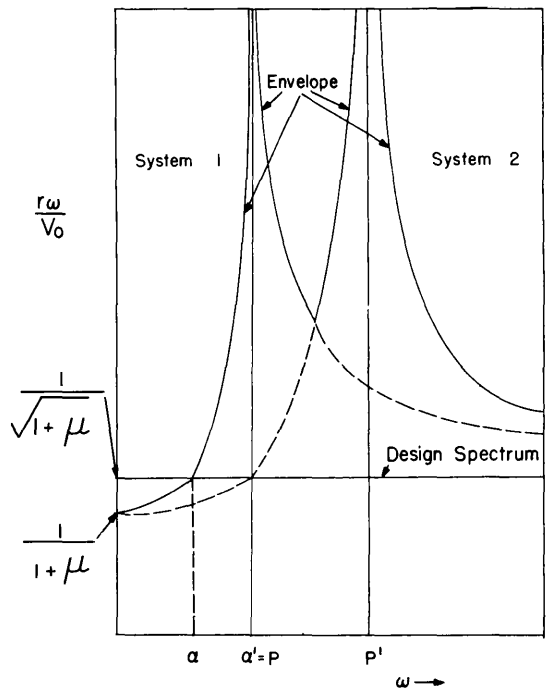

Fig. 4 - Envelope of the two theoretical shock spectra for two free-free systems having the same mass ratio compared with the design shock spectrum

Two-Mode Structure

In the preceding analysis the equipment structure was a single-degree-of-freedom system with a mass M_1 and a fixed-base frequency α. A design-shock spectrum value was derived which depended upon M_1/M_0, the ratio of equipment mass to the base mass. Suppose that the equipment structure had two natural modes instead of one. Then each mode would require its own design-shock spectrum value. However, it is possible that the only information known about the equipment would be its total weight and perhaps its fundamental frequency. The design value accordingly would be the one just developed. The question which arises is: How does the design value obtained when the equipment structure is considered to be one mass differ from the values obtained when the modal effects are considered?

A structure may be replaced by a set of simple oscillators such that the force transmitted across the base is precisely the same for the simple oscillators as for the structure (4,10). These oscillators must have the same fixed-base frequencies as the structure; so their frequencies must coincide with the normal-mode frequencies of the structure. Each oscillator must have a mass such that the time variation of the force exerted upon the foundation is the same as that of the actual structure. Thus the two-mode in-place equipment system may be modeled as shown in Fig. 5. Here, each mass-spring system represents one mode; each has a mass equal to the modal effective mass and a frequency equal to the modal frequency. The sum of the masses m_1 and m_2 is equal to the total mass M of the equipment system. Let

$$\frac{k_1}{m_1} = \beta^2 ,$$

$$\frac{k_2}{m_2} = \gamma^2 ,$$

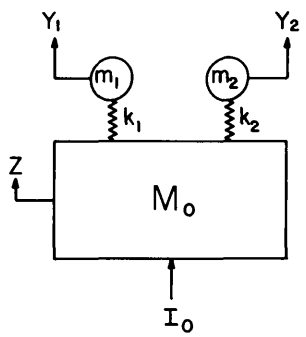

Fig. 5 - A two-mode structure replaced by simple oscillators which have the properties of the mode frequencies and effective masses

$$\frac{m_1}{M_0} = \mu ,$$

and

$$\frac{m_2}{M_0} = \eta .$$

Then, the equations of motion of the system may be written as

$$\ddot{Y}_1 + \beta^2 Y_1 - \beta^2 Z = 0 , \tag{8a}$$

$$\ddot{Y}_2 + \gamma^2 Y_2 - \gamma^2 Z = 0 , \tag{8b}$$

and

$$\ddot{Z} + (\eta\gamma^2 + \mu\beta^2) Z - \eta\gamma^2 Y_2 - \mu\beta^2 Y_1 = 0 , \tag{8c}$$

for which the initial condition at $t = 0$ is

$$\dot{Z} = V_0 = \frac{I_0}{M_0} .$$

By the usual processes, the frequency equation is

$$\omega^2 \left\{\omega^4 - \omega^2 [\gamma^2(1+\eta) + \beta^2(1+\mu)] + \gamma^2\beta^2(1+\mu+\eta)\right\} = 0 , \tag{9}$$

so the natural frequencies of the system are

$$\omega_0^2 = 0 ,$$

$$\omega_1^2, \omega_2^2 = \frac{\gamma^2(1+\eta) + \beta^2(1+\mu)}{2} \pm \frac{1}{2}\sqrt{[\gamma^2(1+\eta) + \beta^2(1+\mu)]^2 - 4\gamma^2\beta^2(1+\mu+\eta)} .$$

The quantity of interest in deriving a design-shock spectrum valve is a relative motion; so the relative displacement for each of the mode systems in Fig. 5 is obtained. Solving Eqs. (8) and letting $Y_1 - Z = X_1$ and $Y_2 - Z = X_2$ results in the relative displacements

$$X_1 = -\frac{V_0}{\omega_2^2 - \omega_1^2}\left[\frac{\gamma^2 - \omega_1^2}{\omega_1} \sin \omega_1 t + \frac{\omega_2^2 - \gamma^2}{\omega_2} \sin \omega_2 t\right] \tag{10a}$$

and

$$X_2 = -\frac{V_0}{\omega_2^2 - \omega_1^2}\left[\frac{\beta^2 - \omega_1^2}{\omega_1}\sin\omega_1 t + \frac{\omega_2^2 - \beta^2}{\omega_2}\sin\omega_2 t\right]. \tag{10b}$$

To obtain design shock spectrum values these displacements are maximized (by ignoring phase) so that

$$X_1 = \frac{V_0}{\omega_2^2 - \omega_1^2}\left[\frac{\gamma^2 - \omega_1^2}{\omega_1} + \frac{\omega_2^2 - \gamma^2}{\omega_2}\right]$$

and

$$X_2 = \frac{V_0}{\omega_2^2 - \omega_1^2}\left[\frac{\omega_1^2 - \beta^2}{\omega_1} + \frac{\omega_2^2 - \beta^2}{\omega_2}\right].$$

Since the shock spectra under discussion are velocity (unit) spectra, these design shock levels are put in dimensionless form as before to give

$$\frac{X_1\beta}{V_0} = \frac{\gamma + \beta\sqrt{1+\mu+\eta}}{\sqrt{1+\mu+\eta}\sqrt{\gamma^2(1+\eta) + \beta^2(1+\mu) + 2\gamma\beta\sqrt{1+\mu+\eta}}}$$

and

$$\frac{X_2\gamma}{V_0} = \frac{\gamma\sqrt{1+\mu+\eta} - \beta}{\sqrt{1+\mu+\eta}\sqrt{\gamma^2(1+\eta) + \beta^2(1+\mu) - 2\gamma\beta\sqrt{1+\mu+\eta}}}.$$

Finally, let

$$\frac{m_2}{m_1} = \frac{\eta}{\mu} = w, \quad \frac{m_1 + m_2}{M_0} = \mu + \eta = \theta, \quad \text{and} \quad \frac{\beta}{\gamma} = q,$$

where $q \leq 1$, since β is the lower mode frequency and γ the second mode frequency.

Now, the nondimensional design shock spectra may be written as

$$\frac{X_1\beta}{V_0} = \frac{1 + q\sqrt{1+\theta}}{\sqrt{1+\theta}\sqrt{1 + \theta - \frac{\theta}{1+w} + q^2\left(1 + \frac{\theta}{1+w}\right) + 2q\sqrt{1+\theta}}} \tag{11a}$$

and

$$\frac{X_2\gamma}{V_0} = \frac{\sqrt{1+\theta} - q}{\sqrt{1+\theta}\sqrt{1 + \theta - \frac{\theta}{1+w} + q^2\left(1 + \frac{\theta}{1+w}\right) - 2q\sqrt{1+\theta}}}. \tag{11b}$$

The design-shock spectrum value obtained when only the total weight of the equipment structure is considered is, according to the previous section,

$$\frac{1}{\sqrt{1 + \frac{m_1 + m_2}{M_0}}}$$

or

$$\frac{1}{\sqrt{1 + \theta}} \quad . \tag{12}$$

To compare this design spectrum value with those of the two-mode system the ratio of each modal design-shock spectrum value to the single-mass shock spectrum value will be used. These ratios are

$$R_1 = \frac{1 + q\sqrt{1 + \theta}}{\sqrt{1 + \theta - \frac{\theta}{1 + w} + q^2\left(1 + \frac{\theta}{1 + w}\right) + 2q\sqrt{1 + \theta}}} \tag{13a}$$

and

$$R_2 = \frac{\sqrt{1 + \theta} - q}{\sqrt{1 + \theta - \frac{\theta}{1 + w} + q^2\left(1 + \frac{\theta}{1 + w}\right) - 2q\sqrt{1 + \theta}}} \tag{13b}$$

for the design values of mode 1 and mode 2, respectively. Figure 6 shows the behavior of R_1, and Fig. 7 shows the behavior of R_2 for several values of θ.

In Fig. 6 the ratio R_1, is plotted as a family of curves, which is a function of the percentage of mass in mode 1 and of the frequency ratio q. R_1 is a monotonic function which always has a value less than 1, which means that the design value obtained from the one-mass system is greater than that obtained from the multimode analysis. For small values of θ there is little difference between the two design values, as is evidenced by the large area of the plane for $\theta = 0.1$, where agreement is better than 0.97. The difference increases as θ increases, which is evident in Fig. 6d, where $\theta = 5$. It is apparent from this graph that for large θ the ratio is more sensitive to changes in modal weight, especially when the frequency ratio q is small. When the equipment weight is greater than the weight of the base, the design value from the single-mass system may be considerably greater than that from the two-mode system. However, for values of θ less than or equal to 1, the value of the one-mass system generally is within 20% of the true value.

The ratio R_2 in Fig. 7 is plotted as a function of percentage of mass in mode 2 and of the quantity $(1 - q)$ to give a convenient coordinate. R_2 is double-valued with respect to the mass parameter and has an extremum at $q = 1/\sqrt{1 + \theta}$, the value of which is $\sqrt{1 + w}/\sqrt{w}$. Since R_2 is always greater than 1, the value obtained from the single-mass spectrum is lower than that from the multimode analysis; however, for small θ the difference is not usually very large. As θ increases, the region of large difference also increases. For smaller values of θ these large ratios occur in a narrow region, where the two modal frequencies are nearly equal; for large θ this region becomes much broader with respect to q. This series of graphs shows that great differences can occur when the percentage of mass in the second mode is small, and as θ becomes larger such error is more likely to occur.

The results in these two groups of graphs are partially summarized in Fig. 8, which presents bounds on the values of R_1 and R_2 as a function of the percentage of mass in the second mode. The line $R = 1$ is an upper bound to the mode-1 design spectrum ratio and a lower bound to the mode-2 ratio. The curves then represent lower bounds on R_1,

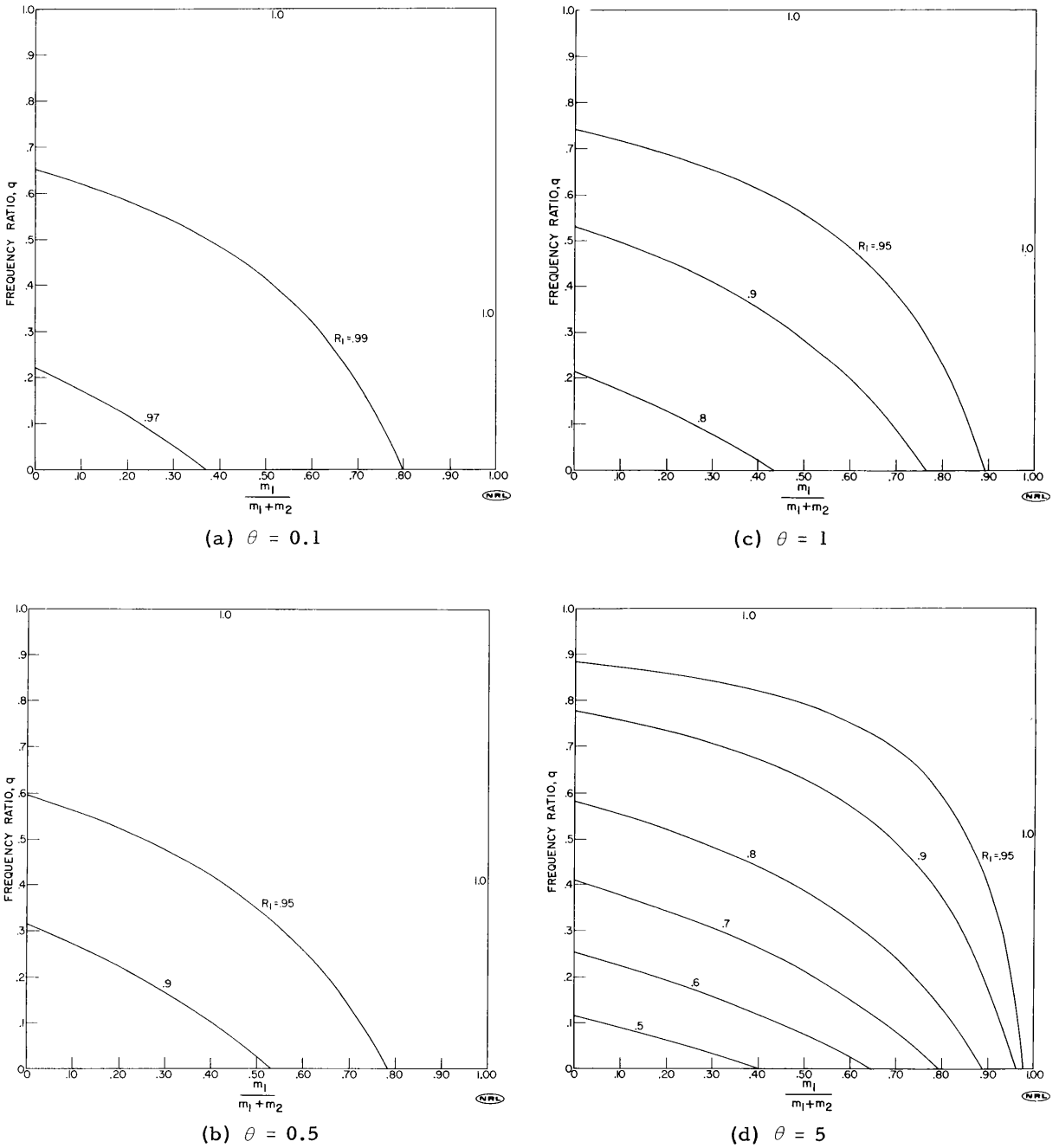

(a) θ = 0.1

(c) θ = 1

(b) θ = 0.5

(d) θ = 5

Fig. 6 - The variation of the ratio of the first-mode design-shock spectrum value to single-mass design-shock spectrum value (R_1) as a function of the percentage of mass in mode 1 $[m_1/(m_1+m_2)]$, the ratio of the mode frequencies (q), and the ratio of equipment mass to base mass (θ)

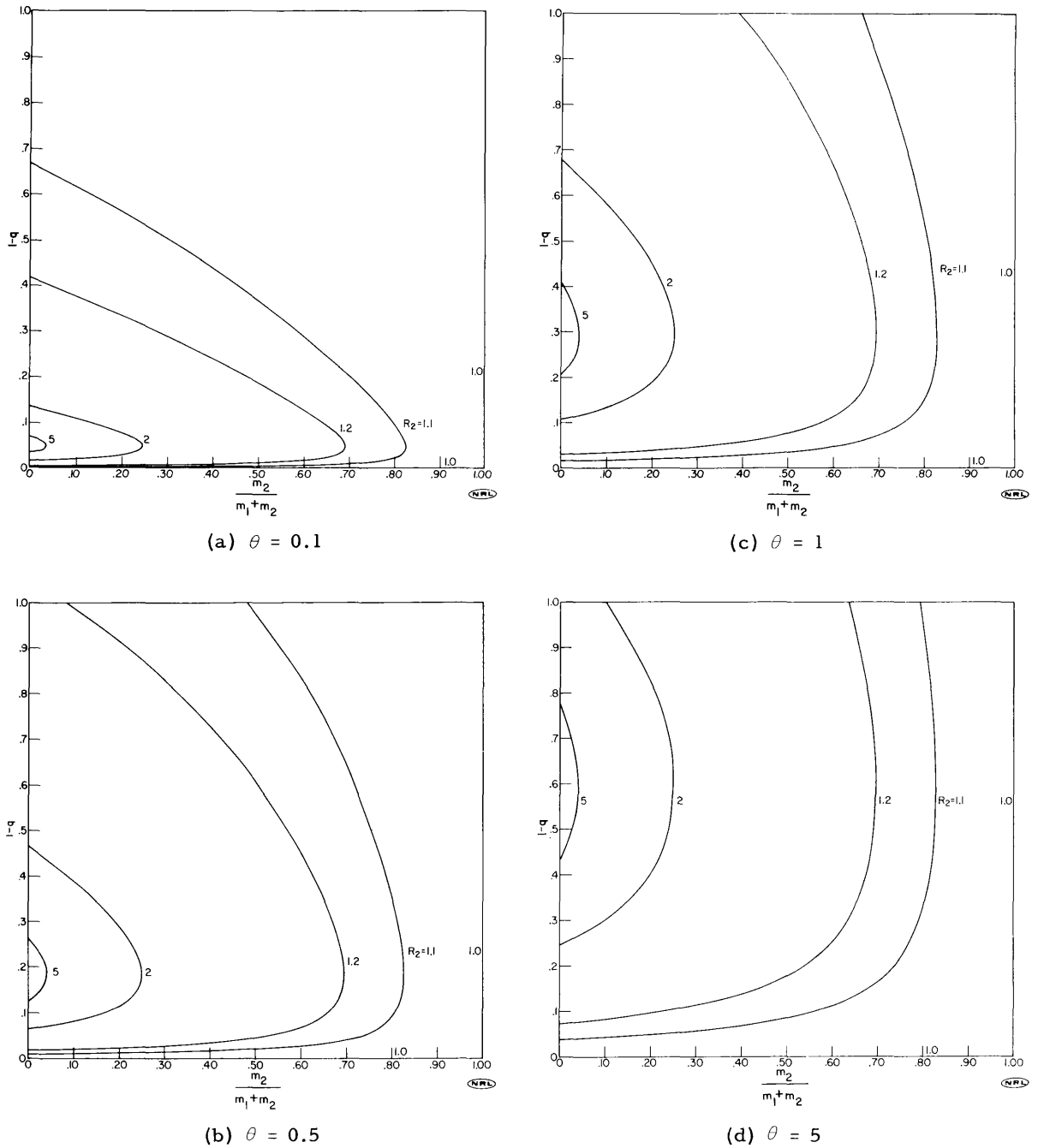

Fig. 7 - The variation of the ratio of the second-mode design-shock spectrum value to single-mass design-shock spectrum value (R_2) as a function of the percentage of mass in mode 2 $[m_2/(m_1 + m_2)]$, the ratio of the mode frequencies ($1 - q$), and the ratio of equipment mass to base mass (θ)

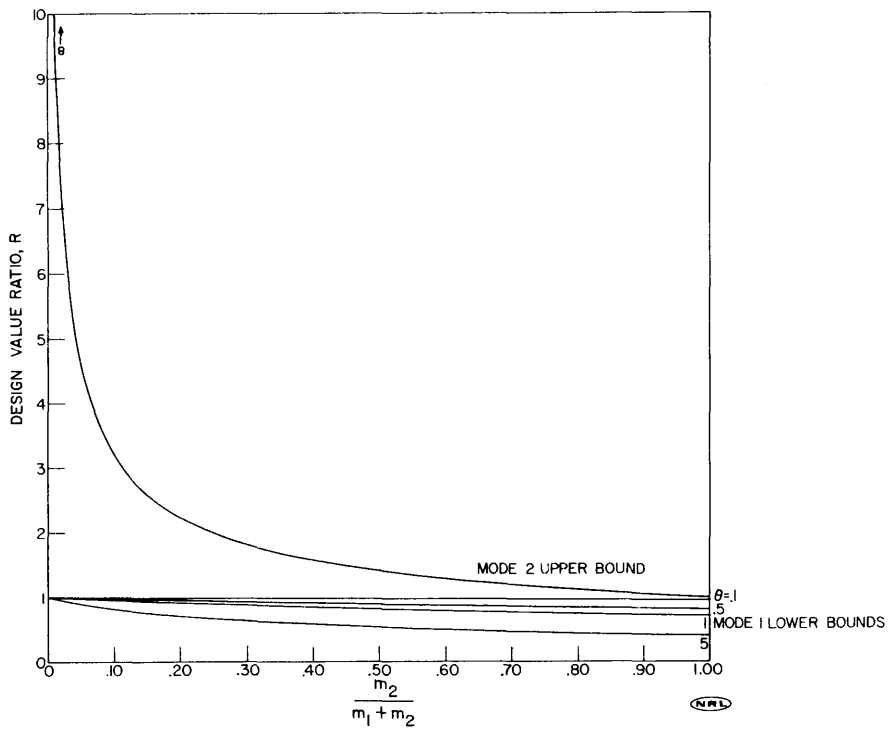

Fig. 8 The upper and lower bounds on the values of R_1 and R_2 as a function of the percentage of mass in the second mode $[m_2/(m_1 + m_2)]$ and the mass parameter θ

for the various values of θ (the region where $R < 1$) and the upper bound on R_2. The former occurs at the value of R_1 at $q = 0$ and the latter at the value of R_2 at $q = 1/\sqrt{1+\theta}$. Note that the upper bound on R_2 is independent of the value of θ.

Cross sections of the contour plots in Figs. 6 and 7 are presented in Fig. 9 and Fig. 10, so that the effects of one of the parameters may be more easily observed. In Fig. 9 each curve shows the effect on R_1 or R_2 of holding the modal masses constant while varying the frequency ratio. The values of R_1 are, of course, less than 1 and those of R_2 are greater than 1. Figure 10 does likewise for holding the frequency ratio constant and varying the modal masses. The value $\theta = 0.5$ was chosen arbitrarily. Note that the values of R for the second mode increase for increasing q until the critical q is reached and then begin to decrease. Thus, the curve for $q = 0.9$ is lower than that for the critical q ($q = 0.8165$). From this curve and the preceding one, it is apparent that the greatest difference between the single-mass design-shock spectrum value and the modal spectra values lies in the mode-2 ratio, when the percentage of mass in mode 2 is small and the frequency ratio, q is in the region of $1/\sqrt{1+\theta}$.

The values of θ used in computing the preceding series of graphs were arbitrarily chosen. It is difficult to determine exactly what these values are in the realistic shipboard situation. Indeed, the model investigated is a very rough approximation to reality. However, the curves presented do show the trends which occur with variations of the parameters. It appears that for a wide range of parameters the design spectrum is not very sensitive to the effects of multimodes. That is, for a reasonable range of difference (say ±20% in the example presented) the value of the single-mass spectrum is a fairly good approximation to the true design spectrum values obtained through the multimode analysis. However, there are ranges of the parameters where the design spectrum is

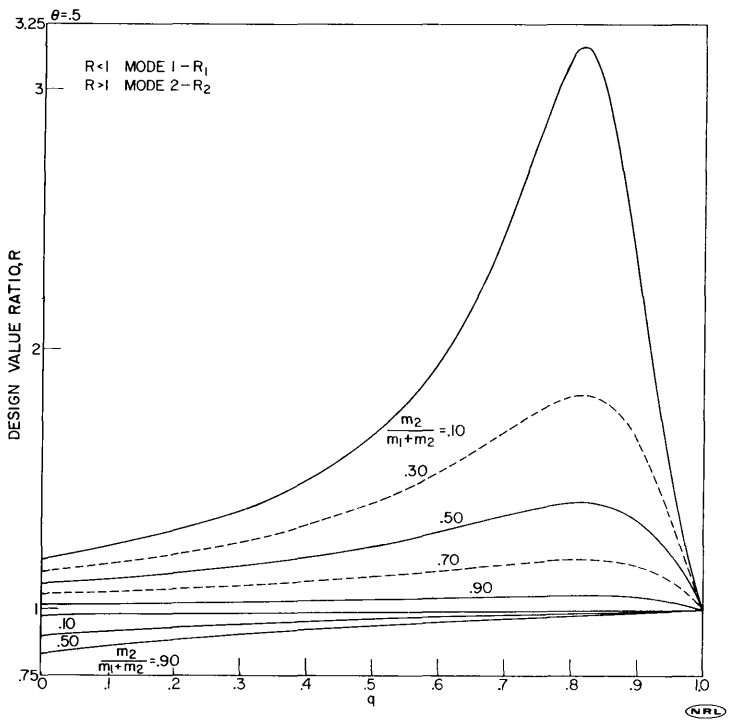

Fig. 9 - The variation of R_1 and R_2 with changes in the frequency ratio q. For each curve the modal masses are constant.

quite sensitive to modal effects, especially so for the higher mode design value. In general, as the ratio of equipment weight to base weight becomes larger, the modal effects become much more apparent, and the single-mass design-shock spectrum value may differ greatly from the true design values.

A Nearby Structure

Another situation somewhat similar to that just examined is one where the equipment-structure of interest is mounted in a location adjacent to another structure. This other structure affects the common reference base motion and, therefore, the design shock values of the equipment system of interest. This situation is shown in Fig. 11, where the mass-spring system M_1-K_1 is the structure for which a design-shock spectrum value is desired. The mass-spring system M_2-K_2 represents a nearby structure whose natural frequency may be either higher or lower than that of the first system and which may weigh more or less than the first system. Since the desired equipment system in place by itself would be considered, the design-shock spectrum value derived earlier for the one-mass system would be used. It is of interest to determine how much this design value differs from that one which would be derived from the modified base motion.

To compare the two design values, the design spectrum for the two-structure system must be known. The equations of motion for the system in Fig. 11 will be similar to those for the two-mode problem of Fig. 5 when the following substitutions are made:

$$\frac{K_1}{M_1} = \beta^2 ,$$

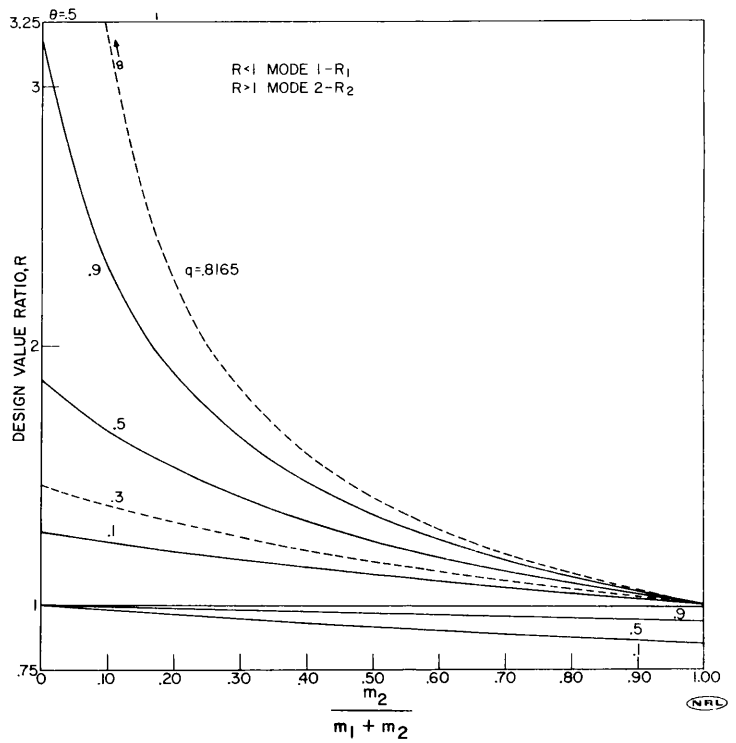

Fig. 10 - The variation of R_1 and R_2 with changes in modal masses, specifically with changes in the second-mode mass $m_2/(m_1+m_2)$. For each curve the frequency ratio is constant.

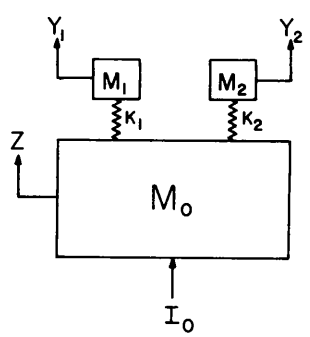

Fig. 11 - Two structures located adjacent to each other; the common base motion is affected by the reactions of both structures

$$\frac{K_2}{M_2} = \gamma^2 ,$$

$$\frac{M_1}{M_0} = \mu ,$$

and

$$\frac{M_2}{M_0} = \eta .$$

The relative displacement between M_1 and M_0 for the initial velocity V_0 is

$$X_1 = -\frac{V_0}{\omega_2^2 - \omega_1^2}\left[\frac{\gamma^2 - \omega_1^2}{\omega_1}\sin\omega_1 t + \frac{\omega_2^2 - \gamma^2}{\omega_2}\sin\omega_2 t\right] . \tag{14}$$

This displacement must be maximized to obtain the design-shock spectrum value. If $\beta < \gamma$, then it can be shown that $0 < \beta < \omega_1 < \gamma < \omega_2$; the expression for maximum displacement under this condition is

$$X_1 = \frac{V_0}{\omega_2^2 - \omega_1^2}\left[\frac{\gamma^2 - \omega_1^2}{\omega_1} + \frac{\omega_2^2 - \gamma^2}{\omega_2}\right].$$

However, if $\beta > \gamma$, then $0 < \gamma < \omega_1 < \beta < \omega_2$, and the maximum displacement becomes

$$X_1 = \frac{V_0}{\omega_2^2 - \omega_1^2}\left[\frac{\omega_1^2 - \gamma^2}{\omega_1} + \frac{\omega_2^2 - \gamma^2}{\omega_2}\right].$$

Letting $\beta/\gamma = q$, the design value can be made dimensionless as before to give

$$\frac{X_1\beta}{V_0} = \frac{1 + q\sqrt{1+\mu+\eta}}{\sqrt{1+\mu+\eta}\sqrt{1+\eta+q^2(1+\mu) + 2q\sqrt{1+\mu+\eta}}}, \quad q \le 1, \tag{15a}$$

and

$$\frac{X_1\beta}{V_0} = \frac{q\sqrt{1+\mu+\eta} - 1}{\sqrt{1+\mu+\eta}\sqrt{1+\eta+q^2(1+\mu) - 2q\sqrt{1+\mu+\eta}}}, \quad q \ge 1. \tag{15b}$$

If only the equipment system M_1-K_1, were in place, then its design-shock spectrum value would be that developed earlier:

$$\frac{1}{\sqrt{1 + \frac{M_1}{M_0}}} = \frac{1}{\sqrt{1+\mu}} .$$

To compare this design value with that which would be used if the effects of the nearby structure were considered, the ratio of the true design value to the single-equipment value is used. This ratio for the two regions of q is

$$S = \frac{(1 + q\sqrt{1+\mu+\eta})\sqrt{1+\mu}}{\sqrt{1+\mu+\eta}\sqrt{1+\eta+q^2(1+\mu) + 2q\sqrt{1+\mu+\eta}}}, \quad q \le 1, \tag{16a}$$

and

$$S = \frac{(q\sqrt{1+\mu+\eta} - 1)\sqrt{1+\mu}}{\sqrt{1+\mu+\eta}\sqrt{1+\eta+q^2(1+\mu) - 2q\sqrt{1+\mu+\eta}}}, \quad q \ge 1. \tag{16b}$$

Figure 12 presents the ratio as a function of q and $\eta/(\mu+\eta)$ for several values of μ.

Consider the region where $q \le 1$. The function is monotonic and always has a value less than 1, which means that the single-degree-of-freedom design shock value is conservative (is greater than if M_2 had been taken into account) when the equipment natural

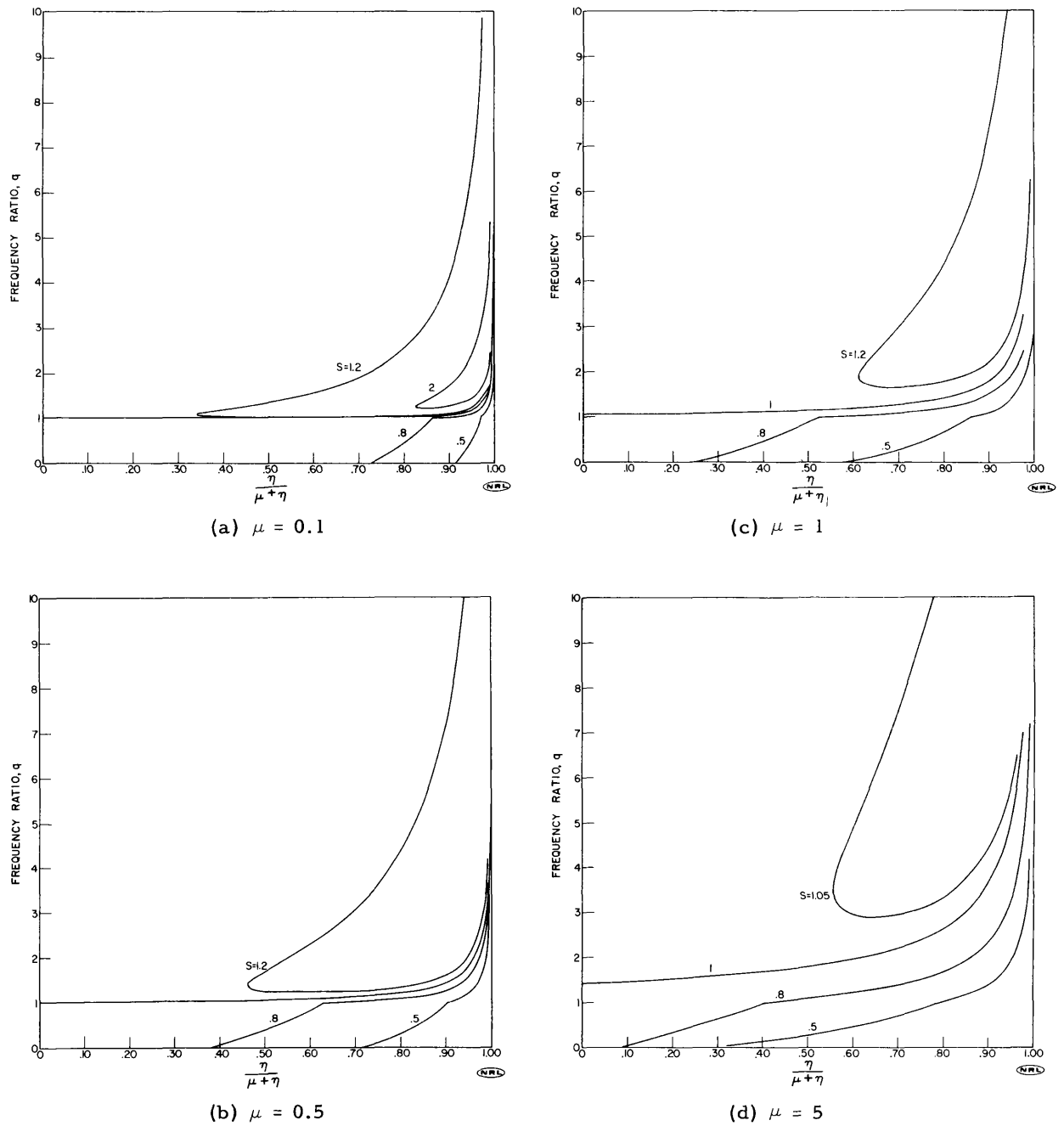

Fig. 12 - The variation of the ratio of the design value for the equipment, considering the effect of the nearby structure, to the design value for the equipment when alone (S) as a function of the percentage of total loading mass contained by the nearby structure, $[\eta/(\mu + \eta)]$, the ratio of the subsystem frequencies (q), and the ratio of the equipment mass to base mass (μ)

frequency is less than that of the nearby structure. As the weight of the nearby structure increases, the error caused by using the single-equipment design shock spectrum also increases. For small μ there is little difference until the weight of the nearby structure becomes at least as great as the structure being analyzed. For $\mu = 0.1$ the adjacent equipment must be about 3 times the weight of the structure of interest for a difference of 20% to occur. As μ increases, the error also increases for any value of η; when $\mu = 1$ the nearby equipment need weigh about half the weight of the equipment of interest for a difference of 20% to occur. It is readily apparent that in this region the ratio becomes increasingly sensitive to the weight of the nearby structure as the value of μ becomes larger; this is especially so as the frequency ratio becomes smaller.

In the region where $q \geq 1$, the design value derived from the single-equipment system might be too high or might be too low. For small μ it would probably be too low; however, for large areas of the function plane the error is not very great. Consider a 20% difference, the $S = 1.2$ contour. For $\mu = 0.1$ the area enclosed by the contour is small compared to the remaining area; for large μ this much error on the low side cannot even be attained. The double-value contours ($S > 1$) have an extremum with respect to q at $q = \sqrt{1 + \mu + \eta}$, the value of which is $\sqrt{1 + (\eta/\mu)}\ \sqrt{1 + \mu}/\sqrt{1 + \mu + \eta}$. As $\eta \to \infty$, this quantity becomes $\sqrt{(1 + \mu)/\mu}$, which is the maximum R that can be attained, and thus is an upper bound to the difference on the unsafe side between the assumed single-mass design value and true multistructure design value.

The bounds on S are shown in Fig. 13 for the various values of μ. The lowest value of S for any value of the mass parameter occurs at $q = 0$. In general, the weight of the nearby structure must be as large as that of the equipment system of interest before a very great difference between the two design values results. For small μ the range of error tends to the unsafe side, and as μ increases the error range shifts toward the safe side.

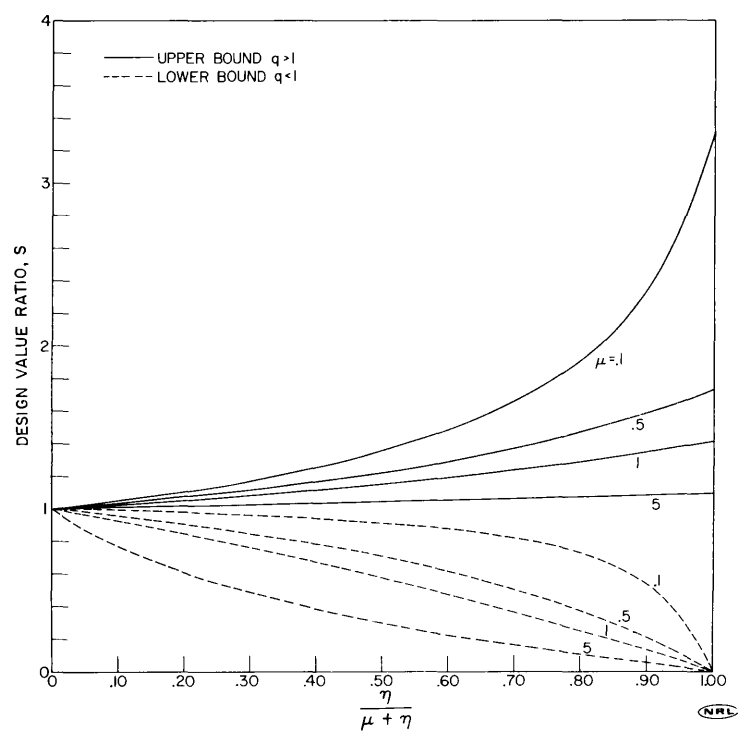

Fig. 13 - The upper bound on S when the ratio q is greater than one and the lower bound on S when the ratio q is less one, as a function of the mass parameter $\eta/(\mu + \eta)$ and μ

Figures 14 and 15 are, in effect, cross sections of the contour maps in Fig. 12 and show the variation of S with the mass and frequency parameters in a different manner. Figure 14 shows the effect of varying the frequency ratio q while holding the mass ratio constant; Fig. 15 illustrates the effect of varying the mass parameter while keeping the frequency ratio constant. The value of μ was arbitrarily chosen to be 0.5, but the families of curves for other values of μ will have the same general shape.

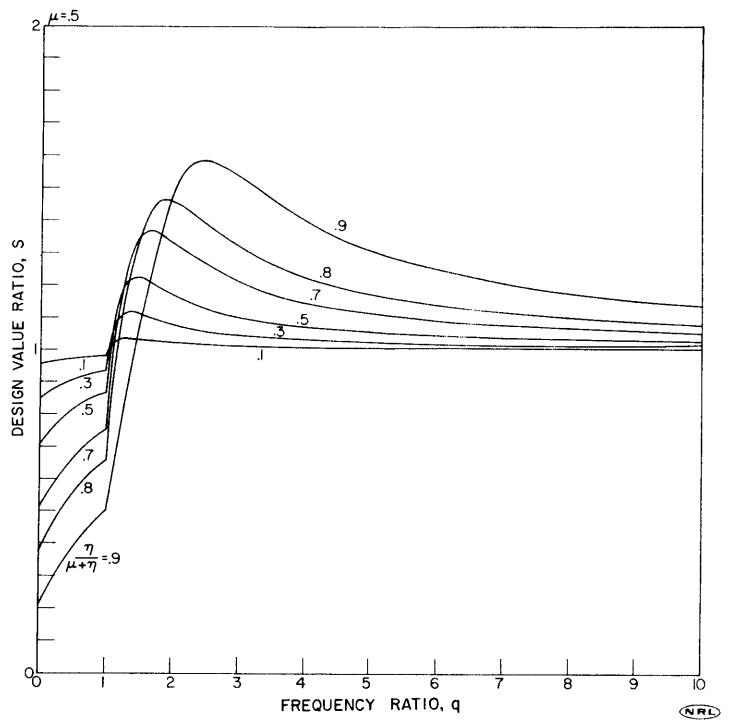

Fig. 14 - The variation of S with changes in the frequency ratio q. For each curve the mass parameter is constant.

The information in the series of graphs in this section shows that for a wide range of the parameters there is reasonably little difference between the design value obtained from the single-mass spectrum and the true design value for the equipment when it is in place adjacent to another structure. When the ratio of equipment weight to base weight μ is small, the largest difference is likely to occur when the frequency of the nearby structure is lower than that of the structure of interest, and its weight is greater than that of the structure of interest. For large μ the greatest difference is likely to occur when the frequency of the adjacent structure is higher than that of the equipment of interest. Of course, the value of μ may be difficult to determine for a realistic shipboard situation. The analysis has shown that for a fairly wide range of parameters of the simple model the single-mass design shock spectrum is relatively insensitive to the effects of a nearby structure.

SUMMARY

A design-shock spectrum value is a design-analysis input which enables an analyst to design-check a contemplated structure (which has never been subjected to a shock and

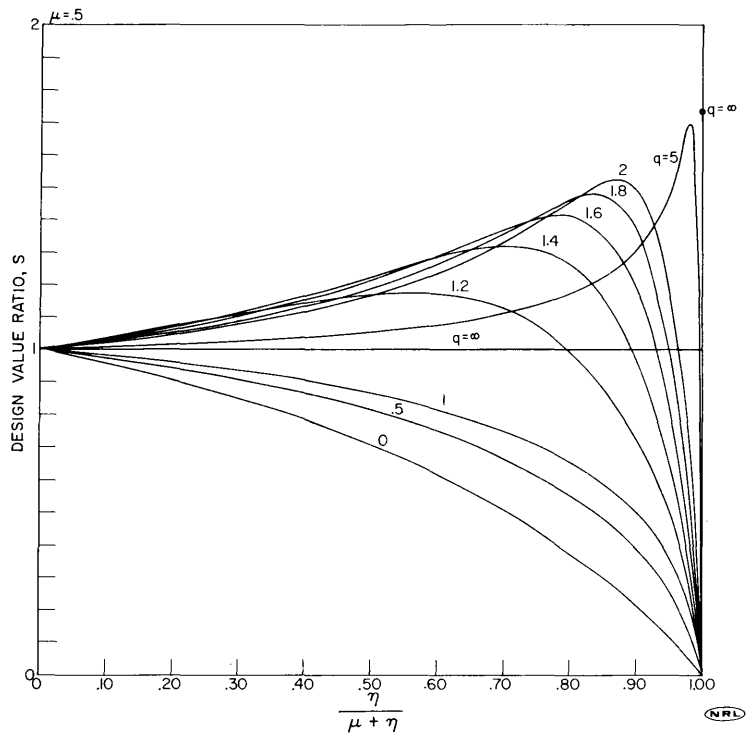

Fig. 15 - The variation of S with changes in the mass parameter. For each curve the frequency ratio is constant.

for which no measured shock spectrum exists). An NRL report (8) considered the problem of formulating design-shock spectrum values for several simple structures and demonstrated the difference between design-shock spectrum values and an ordinary shock spectrum or the envelope of several ordinary spectra for these structures. A brief review of this analysis, including the derivation of an ordinary shock spectrum and the associated design-shock spectrum value for a simple one-mass equipment structure is included in this report for those unfamiliar with the concept.

This same simple structure was used as the basic model in an investigation of the sensitivity of design values to other modes and to nearby structures. It was determined that for a fairly wide range of system parameters the single-mass design-shock spectrum value is relatively insensitive to effects of a second mode or effects of a nearby structure. However, there are certain situations where this quantity does become very sensitive to these effects. This appears to be especially so in the case of the multimode equipment system. Although the simple cases analyzed here are only rough idealizations of reality, the trends observed with the variation of the system parameters should provide some insight into the problems discussed.

REFERENCES

1. Biot, M.A., "Analytical and Experimental Methods in Engineering Seismology," Trans. ASCE 108:365 (1943)

2. Walsh, J.P., and Blake, R.E., "The Equivalent Static Accelerations of Shock Motions," NRL Report F-3302, June 1948; also published in Proc. Soc. Exp. Stress Anal. VI(No. 2):150 (1949)

3. Belsheim, R.O., and O'Hara, G.J., "Shock Design of Shipboard Equipment, Part I — Dynamic Design-Analysis Method," NRL Report 5545, Sept. 1960; also published as BuShips 250-423-30, H.B. 5723 (May 1961)

4. Belsheim, R.O., and Blake, R.E., "Effect of Equipment Dynamic Reaction on Shock Motion of Foundations," NRL Report 5009, Oct. 1957 (Confidential Report, Unclassified Title)

5. Blake, R.E., and Belsheim, R.O., "The Significance of Impedance in Shock and Vibration," Colloquium on Mechanical Impedance Methods for Mechanical Vibrations, New York, ASME, 1958

6. O'Hara, G.J., "Effect Upon Shock Spectra of the Dynamic Reaction of Structures," NRL Report 5236, Dec. 1958; also published Proc. Soc. Exp. Stress Anal. XVIII(No. 1): 145 (1961)

7. O'Hara, G.J., "Impedance and Shock Spectra," J. Acoust. Soc. Am. 31:1300-1303 (Oct. 1959)

8. O'Hara, G.J., "Shock Spectra and Design Shock Spectra," NRL Report 5386, Nov. 1959

9. BuShips, "Shock Design of Shipboard Equipment, Interim Design Inputs for Submarine and Surface Ship Equipment," NavShips 250-423-31, Oct. 1961 (Confidential Report, Unclassified Title); superseded by:

   O'Hara, G.J., and Belsheim, R.O., "Interim Design Values for Shock Design of Shipboard Equipment," NRL Memo. Rept. 1396, Feb. 1963 (Confidential Report, Unclassified Title)

10. O'Hara, G.J., and Cunniff, P.F., "Elements of Normal Mode Theory," NRL Report 6002, Nov. 1963

ANALYSIS OF A SUBSYSTEM WITH BASE-MOTION INPUT

In the text it was stated that the shock spectrum to be used in the normal-mode analysis is one which is valid for the base of the structure. The intent of this appendix is to demonstrate that the base motion is sufficient to define the input to an in-place equipment structure.

Consider the structure in Fig. A1; this system is subjected to an impulse at M_0, which results in an initial velocity V_0 at that mass. The equipment system of interest is shown in Fig. A2. It will be shown that the response of M_2, a point on the equipment, can be obtained by analyzing the system in Fig. A2, where the input motion Z is the motion Y_0 measured at the equipment base M_0 in Fig. A1.

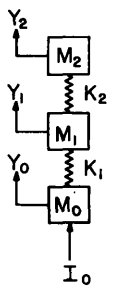

Fig. A1 - A structural system subjected to an impulse load with the equipment structure in place

Fig. A2 - The equipment structure removed from the complete structure and subjected to base-motion input

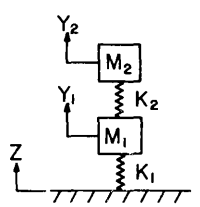

The equations of motion of the system in Fig. A1 are

$$M_2\ddot{Y}_2 + K_2(Y_2 - Y_1) = 0 ,$$

$$M_1\ddot{Y}_1 + K_2(Y_1 - Y_2) + K_1(Y_1 - Y_0) = 0 ,$$

and

$$M_0\ddot{Y}_0 + K_1(Y_0 - Y_1) = 0 .$$

Letting

$$\frac{K_2}{M_2} = \alpha^2 , \quad \frac{K_1}{M_1} = \beta^2 , \quad \frac{M_2}{M_1} = \mu , \quad \text{and} \quad \frac{M_1}{M_0} = \eta ,$$

the Laplace transform of these equations is

$$(S^2 + \alpha^2)\overline{Y}_2 - \alpha^2\overline{Y}_1 = 0 ,$$

$$-\mu\alpha^2\overline{Y}_2 + (S^2 + \beta^2 + \mu\alpha^2)\overline{Y}_1 - \beta^2\overline{Y}_0 = 0 ,$$

and

$$-\eta\beta^2\overline{Y}_1 + (S^2 + \eta\beta^2)\overline{Y}_0 = V_0 .$$

By the usual processes, the frequency equation of the three-mass free-free system is

$$O = S^2(S^2 + \omega_1^2)(S^2 + \omega_2^2) = S^2\{S^4 + S^2[(1+\eta)\beta^2 + (1+\mu)\alpha^2] + \alpha^2\beta^2(1+\eta+\mu\eta)\};$$

so that the complete system natural frequencies are

$$\omega_0^2 = 0 ,$$

$$\omega_1^2, \omega_2^2 = \frac{(1+\eta)\beta^2 + (1+\mu)\alpha^2}{2} \pm \frac{1}{2}\sqrt{[(1+\eta)\beta^2 + (1+\mu)\alpha^2 - 4\alpha^2\beta^2(1+\eta+\mu\eta)}\ .$$

The Laplace transforms of the responses of interest become

$$\overline{Y}_2 = \frac{V_0\,\alpha^2\,\beta^2}{S^2(S^2+\omega_1^2)(S^2+\omega_2^2)}$$

and

$$\overline{Y}_0 = \frac{V_0[(S^2+\alpha^2)(S^2+\beta^2+\mu\alpha^2) - \mu\alpha^4]}{S^2(S^2+\omega_1^2)(S^2+\omega_2^2)} .$$

Thus, the response of M_2 is

$$Y_2 = \frac{V_0\alpha^2\beta^2}{\omega_2^2 - \omega_1^2}\left[-\frac{1}{\omega_1^3}\sin\omega_1 t + \frac{1}{\omega_2^3}\sin\omega_2 t\right] + \frac{V_0\alpha^2\beta^2}{\omega_1^2\,\omega_2^2}\,t .$$

Now, consider the equipment system in Fig. A2. Its equations of motion are

$$M_2\ddot{Y}_2 + K_2(Y_2 - Y_1) = 0$$

and

$$M_1\ddot{Y}_1 + K_2(Y_1 - Y_2) + K_1Y_1 = K_1Z .$$

Making the same substitutions as before, the Laplace transform of these equations becomes

$$(S^2 + \alpha^2)\overline{Y}_2 - \alpha^2\overline{Y}_1 = 0$$

and

$$-\mu\alpha^2\overline{Y}_2 + (S^2 + \beta^2 + \mu\alpha^2)\overline{Y}_1 = \beta^2\overline{Z} .$$

The system's frequency equation is

$$O = (S^2 + \phi_1^2)(S^2 + \phi_2^2) = [(S^2+\alpha^2)(S^2+\beta^2+\mu\alpha^2) - \mu\alpha^4] ,$$

so the fixed-base natural frequencies of the equipment system are

$$\phi_1^2, \phi_2^2 = \frac{(1+\mu)\alpha^2 + \beta^2}{2} \pm \frac{1}{2}\sqrt{[(1+\mu)\alpha^2 + \beta^2]^2 - 4\alpha^2\beta^2} .$$

The Laplace transform of the response of M_2 is

$$\overline{Y}_2 = \frac{\alpha^2\beta^2\overline{Z}}{(S^2+\phi_1^2)(S^2+\phi_2^2)} ,$$

and if the motion at M_0 is used as the input, then this expression becomes

$$\overline{Y}_2 = \frac{\alpha^2\beta^2 V_0 [(S^2+\alpha^2)(S^2+\beta^2+\mu\alpha^2) - \mu\alpha^4]}{(S^2+\phi_1^2)(S^2+\phi_2^2)\, S^2 (S^2+\omega_1^2)(S^2+\omega_2^2)} ,$$

which reduces to

$$\overline{Y}_2 = \frac{V_0\, \alpha^2\, \beta^2}{S^2(S^2+\omega_1^2)(S^2+\omega_2^2)} .$$

This transform is exactly the same as that obtained previously in the complete system analysis, so that the response of M_2 in this case is equal to that response given earlier. This is so even though two different systems were analyzed, one being the complete system having the natural frequencies ω_0, ω_1, and ω_2 and the other being the equipment system which has the fixed-base natural frequencies ϕ_1 and ϕ_2.

Of course, the analysis could be carried further. The motion of M_1 obtained from either of the above systems could be used as the input to the one-mass system M_2-K_2, which has the fixed-base frequency α. The response of M_2 would again be the same as that derived above.

UNCLASSIFIED
Security Classification

DOCUMENT CONTROL DATA - R & D

(Security classification of title, body of abstract and indexing annotation must be entered when the overall report is classified)

1. ORIGINATING ACTIVITY *(Corporate author)* Naval Research Laboratory Washington, D.C. 20390	2a. REPORT SECURITY CLASSIFICATION Unclassified 2b. GROUP

3. REPORT TITLE

THE EFFECT OF A SECOND MODE AND NEARBY STRUCTURES ON SHOCK DESIGN VALUES

4. DESCRIPTIVE NOTES *(Type of report and inclusive dates)*

This is an interim report; work is continuing.

5. AUTHOR(S) *(First name, middle initial, last name)*

G.J. O'Hara and L.P. Petak

6. REPORT DATE April 5, 1968	7a. TOTAL NO. OF PAGES 28	7b. NO. OF REFS 10
8a. CONTRACT OR GRANT NO. NRL Problem F02-05 b. PROJECT NO. SF013-10-05-11655 c. d.	9a. ORIGINATOR'S REPORT NUMBER(S) NRL Report 6676 9b. OTHER REPORT NO(S) *(Any other numbers that may be assigned this report)*	

10. DISTRIBUTION STATEMENT

This document has been approved for public release and sale; its distribution is unlimited.

11. SUPPLEMENTARY NOTES	12. SPONSORING MILITARY ACTIVITY Department of the Navy (Office of Naval Research and Naval Ship Systems Command), Washington, D.C. 20360

13. ABSTRACT

A dynamic design-analysis method developed at NRL for shipboard equipment requires the use of design-shock spectrum values, which provide appropriate input data. These design values are derived from measured data of a number of realistic shock tests. Theoretical and experimental investigations of the past provided insight which has resulted in a set of design data for use with the design-analysis method; these are the presently specified inputs, and studies continue to improve them. The investigation reported here attempts to show the effects upon design-shock spectrum values of a second mode and a nearby structure. This is done by comparing the design-shock spectrum value of a simple, single-degree-of-freedom structure with the design spectrum values obtained for a two-mode structure and with the design value obtained when another simple structure is placed adjacent to the original one. The results indicate that for a wide range of weight and frequency parameters the design spectrum value obtained using a simple model is not greatly sensitive to the effects of multimodes and adjacent structures and, thus, sufficiently defines the appropriate input value. However, for certain ranges of the weight and frequency parameters, gross differences can occur between the design values for the simple system and those of the more complex systems.

DD FORM 1 NOV 65 1473 (PAGE 1)
S/N 0101-807-6801

UNCLASSIFIED
Security Classification

14. KEY WORDS	LINK A ROLE	LINK A WT	LINK B ROLE	LINK B WT	LINK C ROLE	LINK C WT
Dynamic design						
Shock design						
Shock design values						
Design shock spectrum						
Shock spectrum						
Multimode structures						
Adjacent structures						
Dynamic structural interaction						
Sensitivity of shock design values						
Shipboard equipment						