NRL Report 6725

Measurement of Atmospheric Dewpoint From Aircraft

ROBERT E. RUSKIN

Atmospheric Physics Branch
Ocean Sciences Division

June 12, 1968

NAVAL RESEARCH LABORATORY
Washington, D.C.

This document has been approved for public release and sale; its distribution is unlimited.

CONTENTS

Abstract	ii
Problem Status	ii
Authorization	ii
INTRODUCTION	1
AIRCRAFT DEWPOINT HYGROMETRY	2
CHARACTERISTICS OF DEWPOINT HYGROMETER	2
MIRROR CONTAMINATION	2
AMBIGUITY FROM SUPERCOOLED WATER ON MIRROR	4
CONSIDERATIONS IN EXPOSING DEWPOINT SENSORS ON AIRCRAFT	4
PRESSURE ERROR	4
EFFECTS OF SAMPLING RATE AND AIRCRAFT SPEED ON DEWPOINT DEPRESSION CAPABILITY	5
WIND-TUNNEL AND FLIGHT TESTS OF SENSOR MOUNT	7
FLIGHT IN CLOUDS AND PRECIPITATION	8
CONCLUSION	9
REFERENCES	10

ABSTRACT

By cooperative efforts of government and industry, the absolute measurement of atmospheric humidity has now become practical under operational aircraft flight conditions by use of thermoelectrically cooled dewpoint hygrometers with optical detection of condensate and automatic mirror temperature control. Effects of salt contamination can be minimized by in-flight check and adjustment of the dew thickness control level with the contamination present on the mirror. Interfacing of the sensor and aircraft is not amenable to a universal solution for all aircraft; but a mounting arrangement has been developed to permit in-flight adjustment of flow and pressure at the sensor. On Navy Constellation aircraft, a radome can be used as a rain deflector to reduce the entry of liquid water while flying in hurricanes or other precipitation. Mechanical aspiration of the sensor can remove accumulated water in rain and permit measurement of dewpoint on the ground. However, because the dynamic heating evaporates water at any aircraft surface or instrument, data in clouds or precipitation in general must indicate humidity greater than saturation with any type of hygrometer. Total evaporation of cloud water can provide useful information on the total water content of the clouds with a dewpoint instrument designed for this purpose.

PROBLEM STATUS

This is a final report on one phase of the problem; work is continuing on other phases.

AUTHORIZATION

NRL Problem A03-14
Project A37-540-000/652-1/R004-02-01

Manuscript submitted March 27, 1968.

MEASUREMENT OF ATMOSPHERIC DEWPOINT FROM AIRCRAFT

INTRODUCTION

The measurement of free-air humidity by instruments aboard aircraft is complicated by the effects of changes in the temperature and pressure of the sample as it is accelerated to the aircraft speed from free static conditions.

The dynamic temperature increase, Δt, in degrees centigrade follows approximately the formula

$$\Delta t = rS^2 \times 10^{-4} , \tag{1}$$

where S is true air speed in statute mph and r, the recovery factor, has a value of approximately 0.85 for calculating the aircraft skin temperature — slightly higher on leading edges — and 0.95 to 0.99 for instrument probe interiors operating at nearly full dynamic (or pitot) pressure rise. For S in knots, r is 1.13 to 1.32.

The maximum dynamic pressure rise h (above free stream static) in inches of water is related to the indicated air speed S_i in statute mph (1) by the expression

$$h = kS_i^2 , \tag{2}$$

where k has the value 4.92×10^{-4}. For h in millimeters of water and S_i in knots, k = 0.0166.

The true air speed S is approximately related to the indicated air speed S_i (in the same units) by the relation

$$S^2 = S_i^2 \frac{\rho_s}{\rho} , \tag{3}$$

where ρ is the air density at flight altitude and ρ_s is standard sea-level air density, 1.23 kg/m^3. As an example, the true air speed becomes $S_i \sqrt{2}$ when the air density is half of the standard sea-level value, at about 18,000 ft altitude (depending on the air temperature and to a slight extent the humidity present at flight altitude). At this altitude when flying at an indicated air speed of 180 knots (207 mph), the dynamic temperature rise in an instrument housing arranged to operate at full pitot pressure is approximately 8.5°C. The skin temperature and that of a probe operating at free-stream static pressure is then about 7.3°C above true free air temperature.

Data from any humidity instrument which responds to either vapor density or relative humidity must be corrected for the temperature rise in the housing and the ratio of the pressure in the housing to that of the free static air. Included in this group of hygrometers, the most commonly used are wet- and dry-bulb psychrometers, electrical resistance hygrometer elements, and spectral absorption (IR and UV) types. All of these types are discussed in Wexler and Ruskin (2). The temperature correction is different for each of these types and is small for the spectral types. With increased air speeds, dewpoint hygrometer data need only be corrected for housing pressure changes but are essentially unaffected by the temperature rise unless the refrigerating capability of the instrument is exceeded, for example, in dry air or at high aircraft speeds (with consequently high dynamic heating of the aircraft skin).

AIRCRAFT DEWPOINT HYGROMETRY

Except when technical personnel operated the instruments, dewpoint hygrometry aboard aircraft was impractical until the advent of small thermoelectric cooling modules to refrigerate the condensing surface (mirror) (3,4).

Dewpoint hygrometer measurement is generally based on the principle of cooling a small surface until condensation of moisture from the air sample occurs, then controlling the temperature of this surface to maintain a constant small amount of condensate (dew or frost). The surface temperature is then the dewpoint of the moisture in the air sample (or frostpoint if the condensate is frozen).

Several types of hygrometer (5,6) deduce a dewpoint readout from a determination of the temperature needed to maintain a fixed relative humidity by controlling the temperature required to maintain a constant electrical resistance through a salt or other humidity element surface. No density or temperature correction is needed for these instruments if the pressure is equal to free static. Error from contamination can be a problem in a smoky or salty atmosphere.

CHARACTERISTICS OF DEWPOINT HYGROMETER

The dewpoint hygrometer* now in use by the U.S. Navy on many of the Superconstellation aircraft of the hurricane and typhoon reconnaissance squadrons consists of a small sensor unit about 1 inch in diameter by 2 inches long and an electronic control unit 5 by 10 by 7 inches high, shown in Fig. 1. The basic operation of this instrument is as follows: a mirror surface approximately 1/8 by 1/4 inch is cooled by passage of dc current through a Peltier-effect or thermoelectric cooling module. The mirror is illuminated with a small filament-type light bulb. The direct reflection of this light is detected by a photoelectric cell which is electrically balanced against a second photocell placed to receive a small amount of light directly from the bulb and some scattered light from condensate on the mirror surface when the mirror is cooled to the dewpoint temperature. At this condition, the light level received by the "direct" photocell is reduced by the condensate. The two photocells are electrically arranged to control the cooling current to maintain the mirror temperature such that a small amount of condensate keeps its optical balance nearly constant on the mirror surface. The temperature of this surface is measured with a platinum wire resistance thermometer. This temperature is indicated or recorded as a 0 to 5 volt dc signal for -50 to +50°C frost- or dewpoint temperature. Other models of the same instrument have other types of electrical readout. A performance check of the temperature readout electronics is provided by temporarily substituting for the sensor two fixed resistors which in turn have been matched to the thermometer resistance at two given temperatures.

MIRROR CONTAMINATION

Switch positions are provided on the electronic control unit for in-flight checking of the condensate thickness in terms of the photocell unbalance while the mirror is clear. This clearing is achieved using the "Test" switch position by the automatic application of electric heating. This check is important during long flights over the ocean, particularly at altitudes below 1000 ft or through clouds (because clouds over the ocean generally contain salt particles and form in updraft regions which carry the salt aloft). Salt accumulation on the mirror generally does not produce errors greater than 1°C in dewpoint for hundreds of hours of flight above 1000 ft altitude, provided that about once or twice per day the light balance is checked and adjusted with the mirror cleared of condensate

*Model 137-C3-S3-P of Cambridge Systems, Inc., Newton, Massachusetts

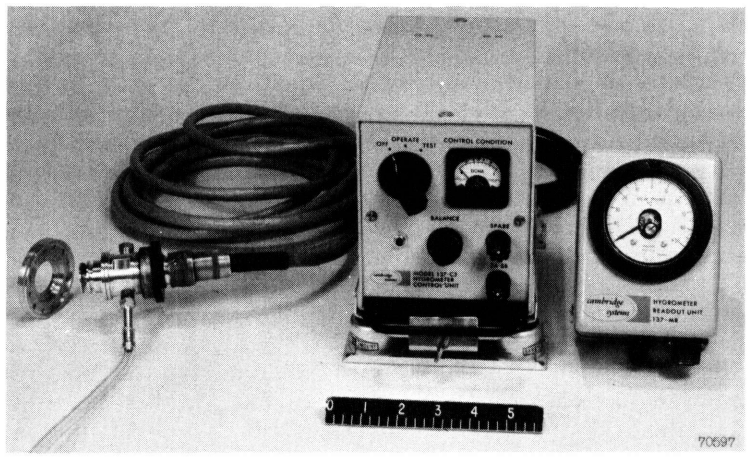

Fig. 1 - Dewpoint hygrometer system including (left to right) fuselage mounting fixed plate, sensor mount with sensor installed, electronic control unit, dewpoint temperature indicator. Hose for aspiration and water drainage is shown connected to sensor mount.

(by warming). On this model of instrument, this adjustment is made by setting the control function knob on "Test" and adjusting the photocell "Balance" knob to obtain a center-scale reading on the "Control Condition" meter. By this procedure the optical balance is established with the salt present, so that new condensate will provide additional light unbalance for the automatic control. Since dry salt scatters more light than dissolved salt (with dew present), the dew tends to be thicker after the balance is adjusted with the salt. A thicker dew layer tends to compensate for the Raoult effect of raising the condensation temperature slightly by the salt being dissolved in the dew. (For a more complete discussion, see (7).)

Prolonged periods (generally several hours) of forced aspiration of a dewpoint sensor while the aircraft is parked with engine exhaust or diesel smoke entering the instrument may require cleaning the mirror with a solvent* and wiping dry. Similarly, the mirror may require cleaning after the plane has been washed down if the washdown solvent enters the sensor. Otherwise, cleaning the mirror is generally required only after several hundred hours of flight if in clear air above 1000 ft altitude. Accumulation of sufficient salt to require cleaning is usually indicated by the inability to balance the instrument during the test procedure. With the optical type of dewpoint hygrometer, considerable oily contamination can be tolerated before a detectable dewpoint error is introduced; however, salt contamination effects are less predictable, especially if the optical parts as well as the mirror are contaminated. Being hygroscopic, the salt changes transparency with the relative humidity. If this change occurs on the photocells, the control condition may be erratic, causing dewpoint errors from -0.5 to +1.5°C. If the instrument operation or the dewpoint values appear to be in question, cleaning of the mirror and photocells is advisable. Contamination of the photocells is reduced by mounting the sensor with them at the top or side to prevent liquid salt water from settling on them.

*Cleaner, "Type A" of Cambridge Systems, Inc.

AMBIGUITY FROM SUPERCOOLED WATER ON MIRROR

Occasionally the dew deposit will not freeze when the dewpoint is a few degrees below 0°C. This possibility of supercooling causes an uncertainty of 0.5° at -5°C and about 1° at -10°C. (A dewpoint of -10°C is equivalent to a frostpoint of -9°C.) Below -10°C the mirror is generally frozen within about a minute unless the instrument is being operated with very thin dew thickness; for example, if the "Control Condition" meter on "Test" reads negative. (Larger drops of dew have a greater probability of containing freezing nuclei, and the total mass of water is greater.) After clearing the mirror, the dew droplets tend to remain quite small for a few minutes, hence are likely to remain supercooled somewhat longer.

Supercooling of the deposit is most likely to occur during the first few hours of operation after the mirror has been cleaned with a solvent. In this case the dew will frequently supercool to about -8 or -10°C, then freeze after about 5 minutes at this temperature or after about 1 minute at -10 to -12°C. When the mirror is slightly dirty, the freezing usually occurs at about -5°C within a minute or at -2°C within about 5 minutes. The freezing time can be reduced on those instruments with a "Max Cool" switch by operating it a few seconds to cool the mirror below -10°C. After the switch is returned to "Operate," the temperature tends to overshoot to above 0°C while the instrument is readjusting the frost thickness to compensate for the heavy coating accumulated while the temperature was forced below the frostpoint. During this time, it may be necessary to return momentarily to the "Max Cool" condition several times to avoid remelting the frost.

CONSIDERATIONS IN EXPOSING DEWPOINT SENSORS ON AIRCRAFT

Problems which must be considered in the measurement of dewpoint in flight are

1. Proper ventilation rate through the sensor — too high increases heat loading on mirror cooling system; too low ventilation causes slow response and/or instability,

2. Measuring and also adjusting, in flight if possible, the free-stream static pressure at the sensor inlet,

3. Minimizing of liquid water entry to the sensor mount in clouds or rain,

4. Deicing of the entry if flight is to include supercooled clouds,

5. Providing an adequate heat sink for thermoelectric cooling (heat pumping) to the aircraft frame or skin,

6. Pressurization sealing of the sensor if it is mounted in a pressurized region of the fuselage,

7. Providing means for aspirating sensor during preflight check.

An assembly (Fig. 2) was designed to include the above considerations (except deicing) in mounting the dewpoint sensor on the Superconstellation aircraft. Wind-tunnel and flight tests were performed to determine the pressure and flow characteristics of the sensor mount and the performance of the dewpoint hygrometer under various conditions.

PRESSURE ERROR

If the air sample in the hygrometer is at the same pressure as that of the outside free air, then the free air dewpoint is the same as that in the sensor housing and is essentially independent of sample temperature changes. If the pressure is different, then

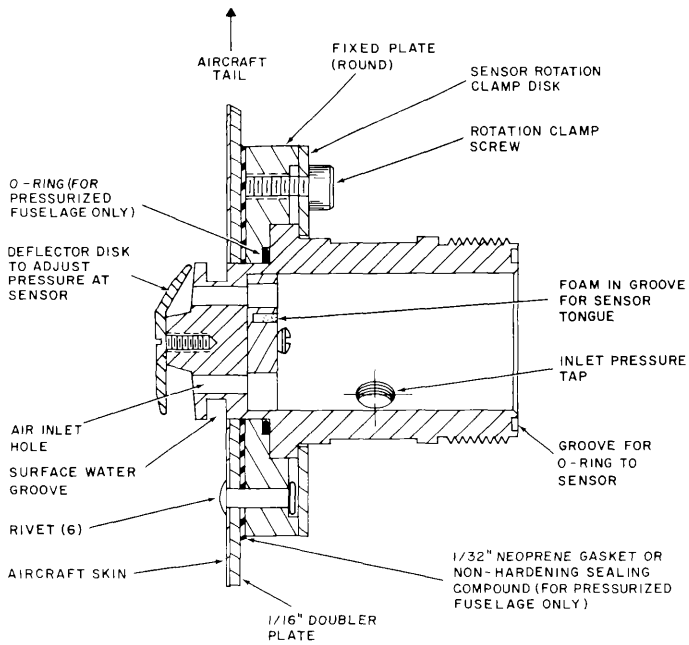

Fig. 2 - Dewpoint sensor mount, cross section (double scale), top view of installation on right-hand side of airplane

the correct outside dewpoint may be found by converting the dewpoint sensor reading to corresponding vapor pressure with a humidity slide rule or suitable tables (8), multiplying this vapor pressure by the ratio of the free-stream static pressure (absolute) to the pressure (absolute) in the sensor, then converting the new vapor pressure to the corresponding corrected dewpoint. A 10-percent error in absolute pressure produces a 10-percent error in vapor pressure (also relative humidity) and an error in the dewpoint of about 1° at -40°C and 1.5° at +20°C.

EFFECTS OF SAMPLING RATE AND AIRCRAFT SPEED ON DEWPOINT DEPRESSION CAPABILITY

When flying in a relatively dry atmosphere, it is important to check whether or not the true dewpoint depression exceeds the mirror-cooling capability of the instrument. Some of the instruments are equipped with a "Max Cool" test switch for this purpose. For those instruments not so equipped, a few seconds of maximum cooling can be obtained during operation by quickly turning the "Balance" (dew-thickness) knob fully clockwise and observing whether the temperature indication decreases beyond that present during operation (then resetting the control condition). If during this test the temperature does not drop below the dewpoint indication, then the dewpoint data should be noted as being out of range and probably too warm.

The cooling capability measured with this model of dewpoint hygrometer with no sample flow is shown by the solid curve of Fig. 3. This cooling is 34° at an ambient temperature of +20°C and 26° at -20°C. During the first minute after turning on a cold sensor (before the heat sink reaches an equilibrium temperature), the cooling capability is 5 to 10°C greater. In flight, two factors tend to reduce this cooling capability as follows:

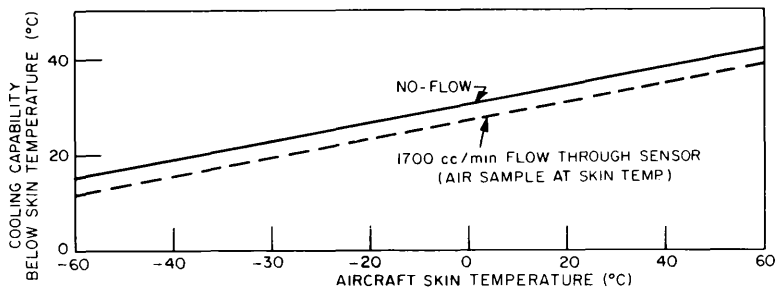

Fig. 3 - Thermoelectric dewpoint hygrometer, Model 137-C3 of CSI, equilibrium depression capability below aircraft skin temperature at various temperatures

1. The dynamic heating of the aircraft skin or other mounting structure (plus the ambient temperature) determines the effective ambient temperature of the sensor-cooling heat sink. This dynamic heating reduces the dewpoint depression capability (below free-air ambient temperature) by an amount which can be calculated from Eq. (1) and is typically 2°C at approximately 120 knots indicated air speed, S_i, at a low altitude but is 4°C at 18,000 ft (3 km) altitude; 4°C at 180 knots S_i at low altitude and 8°C at 18,000 ft. At 18,000 ft with a flight speed of 180 knots S , the frostpoint depression capability under optimum sample-flow conditions would be about 18°C, corresponding to 20 percent relative humidity at a typical ambient temperature of -5°C.

2. The maximum depression is not achieved if the sample flow through the sensor provides added thermal loading at the mirror surface. This is the case when the flow rate is excessive or when the sample air is being artificially heated above aircraft skin temperature (for example with deicing).

Laboratory tests were performed to determine an optimum flow rate with this sensor for the best compromise between maximum depression and fast response to changing dewpoint temperatures. It was found that approximately 1700 cc/min or 3.7 ft^3/hr (at standard sea-level conditions) through the sensor reduced the cooling capability about 3°C (dashed curve of Fig. 2). To determine the dewpoint depression below ambient temperatures, allowance must be made for the dynamic heating of the aircraft skin. The 1700 cc/min flow rate through the sensor is obtained when the pressure differential, Δp, across the sensor is 3 to 5 mm of water. As the dewpoint decreases, increased mass flow is desirable for a constant vapor mass flow rate, but a further loss of cooling capability would then result. As flight altitude is increased, a larger volume rate of air sample is required to maintain the fast response, but the required mass flow is essentially constant. A constant Δp produces a roughly constant mass flow. If the aircraft maintains a constant S_i with changing altitude, then the sensor mount will, in general, maintain a constant Δp across the sensor, hence, a constant mass flow. If the plane is to be operated over a wide range of S_i, then no single flow adjustment can maintain a constant mass flow rate through the sensor using only the aerodynamically produced Δp across the mount. In this case either the flow will be too slow at low S_i or the depression capability will be limited at high S_i by both a higher dynamic heating of the skin and an increased sample flow rate through the sensor. This problem can be eliminated by use of a pump of the constant-volume or preferably a constant-mass-flow type to aspirate the sample. With no flow (for example, when the plane is on the ground), the hygrometer will usually "hunt" because dew forming on the mirror reduces the amount of vapor remaining in the air in the sensor; hence, the dewpoint is lowered. The instrument follows this lowering dewpoint. When the mirror temperature gets down to the new dewpoint of the vapor-depleted air, some dew will start to evaporate, raising the dewpoint of

the air. The mirror temperature will rise toward the new dewpoint of the now wetter air, evaporating more moisture into the sample until a new equilibrium high dewpoint is reached. This hunting cycle usually continues until ventilation is provided.

WIND-TUNNEL AND FLIGHT TESTS OF SENSOR MOUNT

Arrangements were made by Cambridge Systems, Inc., for use of a 4-ft wind tunnel at Harvard University to test the flow and pressure characteristics of the sensor mount. This tunnel provides for speed adjustments up to 135 knots. Multiple water manometers were provided for several simultaneous pressure readings.

To assure comparability of results from the wind-tunnel and flight tests, a small pitot-static test probe was used to determine a profile of air speed vs distance from the wall of the tunnel. These data are shown in the bottom curve of Fig. 4. (The same test probe was later used during the flight tests, resulting in the upper curve of Fig. 4.) In order to minimize the venturi effect between the probe and the wall for pressure measurements at the smallest distances, the probe was made with static holes aligned to avoid positions facing toward the wall.

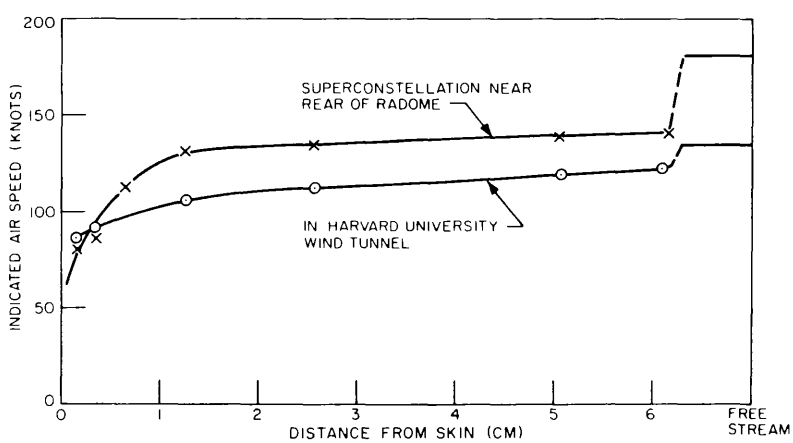

Fig. 4 - Indicated air speed (true air speed at sea level) at various distances from the aircraft skin or wind-tunnel wall

The sensor and mount of Fig. 2 were mounted through the wind-tunnel wall, protruding about 1 cm into the tunnel. The S_i at this location (from Fig. 4) was 100 knots.

The absolute pressure and Δp across the sensor can be measured by manometers in the case of wind-tunnel measurement. For flight tests, altitude and air-speed instruments can be connected to the threaded holes in the sides of the mount (inlet and outlet pressure taps) as shown in Fig. 5.

The mount was designed so that both the absolute pressure and the pressure drop (Δp) across the inlet-to-outlet holes could be adjusted by rotating the mount and thereby changing the alignment of the holes with respect to the direction of air flow. The pressure range and sensitivity to rotation can be altered by changing the angle of the external deflecting disk visible in Fig. 2 at the left end of the mount. It was found that the least sensitivity of absolute pressure to changes in angle of rotation is obtained with the

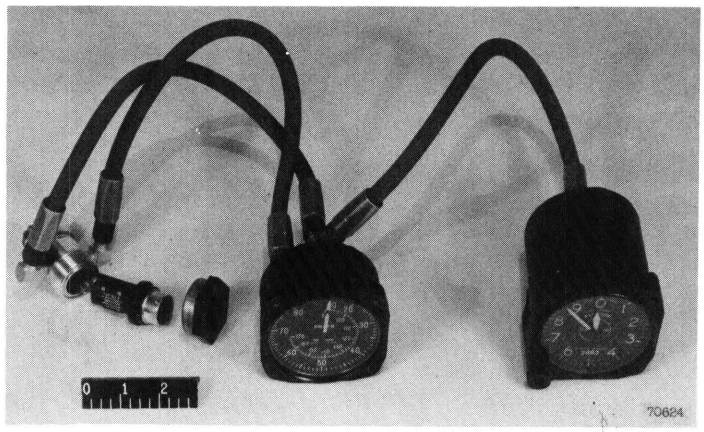

Fig. 5 - Dewpoint sensor mount with air-speed meter and altimeter connected for pressure and pressure drop measurement. The sensor is shown directly above the inch scale.

deflecting disk bend line set perpendicular to the line of the inlet and outlet holes. The most sensitivity to rotation, hence largest range of pressure change, is available with the disk set at 45 degrees to the line of the holes. With the wind tunnel operating at 135 knots, the 45-degrees setting of the disk gave absolute pressures in the mount ranging from 2 mm of water above free static to 62 mm and a Δp across the sensor from 5 to 35 mm. The highest absolute pressure, 62 mm, produces a dewpoint error of only about 0.1°C. Operation of the dewpoint hygrometer in the tunnel was optimum at a Δp of 3 to 5 mm water, similar to the optimum conditions found in the laboratory.

A flight test was then made on one of the NRL Superconstellation aircraft with several of the other cloud physics instruments also being flight tested. The air-speed profile vs distance from skin was measured at 3000 ft altitude with an air-speed meter connected across the same pitot-static probe which has been used in the wind tunnel. These data are plotted on the upper curve of Fig. 4. The mounting location was in the narrow region near the rear of the radome to minimize precipitation striking the mount. This region is adjacent to the radome vent holes in an area of nearly free-stream static pressure. Since the absolute pressure was nearly correct in this location, the sensor mount deflection disk was set to give minimum pressure buildup, with the deflection disk bend line next to the outlet hole and perpendicular to the line of the inlet and outlet holes. An altimeter was connected to the inlet side of the mount, and an air-speed meter was connected from the inlet to the outlet taps (Fig. 5). The mount was rotated to locate the outlet hole and the deflection disk bend to the rear as shown in Fig. 2, with the line of the holes sloping down at the rear about 20 degrees from horizontal. It was found that this position gave an altimeter reading within ±10 ft of the aircraft altimeter at all altitudes from 3000 to 15,000 ft. The Δp across the sensor was 5 mm of water (17 knots on the air-speed meter) for the normal cruise S_i of 180 knots. The dewpoint hygrometer gave maximum cooling depressions approximately as shown by the dashed curve of Fig. 3, when corrected for dynamic heating by Eq. (1) (or with the outside air temperature read from a skin-temperature thermometer instead of the vortex true air temperature thermometer normally used in cloud measurements).

FLIGHT IN CLOUDS AND PRECIPITATION

With the sensor mounted well behind the thick portion of the radome, the NRL flights have encountered a minimum amount of problem with water accumulating in the probe

except when the plane is parked on the ground during a rainstorm or after the plane has been washed down. In these cases the instrument reads off-scale on the hot side until either the sensor is drained or the plane takes off and flies a couple of minutes to evaporate any water in the mount. This problem can be eliminated, thereby permitting preflight dewpoint measurement by installing either a hand-operated aspirating pump or an electric pump connected to the sensor-mount outlet pressure tap inside the plane, with the pump discharge outside the pressurized compartment of the fuselage.

Several inflight experiments have been made using various humidity instruments and entry configurations in attempts to prevent cloud water from entering the instruments. In each case the small cloud droplets followed the airflow into the entry until the dynamic heating caused the evaporation of the droplets. The indicated humidity was then generally somewhere between saturation and a higher value such as that measured by the NRL cloud evaporator total-water-content instrument; this measurement includes both large raindrops and small cloud droplets, as well as ice, if any. Unless a dewpoint hygrometer or any other type of humidity instrument is measuring the heated vapor from an evaporator (9,10), the only useful data which can be obtained while flying in rain or clouds is during the occasional times when one finds unsaturated conditions (which is rare).

On installations in which the sensor cannot be mounted behind a water deflector (such as the radome), some type of raindrop separator or deflector should be incorporated in the installation. One successful type is the gasoline tank "teardrop" rain deflector used ahead of aircraft gasoline-tank vents. Any deflector will require a change in the sensor-mount pressure adjustments. A water deflector which incorporates pressure adjustment by rotating the sensor has been designed but has not yet been flight tested. If deicing is to be incorporated into a dewpoint hygrometer entry, provision must be included for dissipating the deicing heat in a manner which does not greatly degrade the cooling capability of the instrument.

CONCLUSION

Of the various types of hygrometer, the most satisfactory to date for aircraft use in determining the absolute value of humidity is the thermoelectrically cooled dewpoint hygrometer type having optical control of the mirror condensate. All hygrometers available to date have limitations in dewpoint depression capability, or in reliability of operation and components, or in engineering for flight requirements of (a) checking performance during flight and (b) adjustment to compensate for contamination of the sensor by salt. New models will soon be available which promise to reduce all of these limitations simultaneously.

The problems of interfacing the instruments with various aircraft still present a problem. The mount for which tests are described herein solves most of the problems for installation on the Navy Superconstellations if the instrument is properly adjusted and equipped with an aspirator, either manual or automatic, to withdraw any liquid water which may enter and to provide forced ventilation when operating on the ground. For installations without any type of rain deflector ahead of the mount, some type of deflector should be provided on the mount.

No present type of liquid water separator will permit meaningful humidity measurements with any type of hygrometer during flight through rain or clouds except for a few special-purpose measurements in which water evaporated into the sample does not invalidate the data. The dynamic heating of the aircraft skin and any sensor produces evaporation of some liquid water into the sample even though an efficient water separation process is employed.

Meaningful data on total water content (vapor and liquid) of the air can be obtained by using a properly designed water evaporator ahead of the hygrometer sampling inlet. This type of instrument (9,10) measures the absolute moisture content with a dewpoint hygrometer as well as the rapid fluctuation found in clouds. Rapid response is achieved by incorporation of a Lyman-alpha UV spectral absorption vapor density sensor having a time response of about 10 ms, approximately equal to the time required to change the sample in the sensor (11,10). The Navy and the Department of Commerce, Environmental Science Services Administration (ESSA), are procuring engineering models of this instrument* to determine its potential for future hurricane reconnaissance, as well as the current application to cloud physics research. A new model of dewpoint hygrometer is being developed for this instrument to incorporate a two-stage thermoelectric cooler and an overall design for flight operations.

REFERENCES

1. Eaton, H.N., Beij, K.H., Brombacher, W.G., Frymoyer, W.W., Henrickson, H.B., Seward, C.L., and Strother, D.H., "Aircraft Instruments," Ch. 2, New York:Ronald Press, 1926

2. Wexler, A., and Ruskin, R.E., editors, "Humidity and Moisture," Vol. I, "Principles and Methods of Measuring Humidity in Gases," New York:Reinhold Publishing Company, 1965

3. Francisco, C.C., and Beaubien, D.J., "An Automatic Dewpoint Hygrometer with Thermoelectric Cooling," Ch. 17 in "Humidity and Moisture," Vol. I, New York: Reinhold Publishing Company, 1965

4. Paine, L.C., and Farrah, H.R., "Design and Applications of High-Performance Dew-Point Hygrometers," Ch. 18 in "Humidity and Moisture," Vol. I, New York:Reinhold Publishing Company, 1965

5. Nelson, D.E., and Amdur, E.J., "The Mode of Operation of Saturation Temperature Hygrometers Based on Electrical Detection of a Salt-Solution Phase Transition," Ch. 63 in "Humidity and Moisture," Vol. I, New York:Reinhold Publishing Company, 1965

6. Leone, O.J., "Improvements in Dew-Point Measurements of Gases by the Use of Peltier Devices," Ch. 65 in "Humidity and Moisture," Vol. I, New York:Reinhold Publishing Company, 1965

7. Wylie, R.G., Davies, D.K., and Caw, W.A., "The Basic Process of the Dew-Point Hygrometer," Ch. 12 in "Humidity and Moisture," Vol. I, New York:Reinhold Publishing Company, 1965

8. List, R.J., "Smithsonian Meteorological Tables," Washington, D.C.:Smithsonian Institution, 1966, p. 351

9. Ruskin, R.E., "Hygrometer Developments at the U.S. Naval Research Laboratory," Ch. 66 in "Humidity and Moisture," Vol. I, New York:Reinhold Publishing Company, 1965

*Under contract by Cambridge Systems, Inc.

10. Ruskin, R.E., J. Appl. Meteorol. 6:72 (1967)

11. Randall, D.L., Hanley, T.E., and Larison, O.K., "The NRL-Lyman-Alpha Humidrometer," Ch. 44 in "Humidity and Moisture," Vol. I, New York:Reinhold Publishing Company, 1965

This page intentionally left blank.

Security Classification

DOCUMENT CONTROL DATA - R & D

(Security classification of title, body of abstract and indexing annotation must be entered when the overall report is classified)

1. ORIGINATING ACTIVITY *(Corporate author)* Naval Research Laboratory Washington, D.C. 20390	2a. REPORT SECURITY CLASSIFICATION Unclassified 2b. GROUP

3. REPORT TITLE

MEASUREMENT OF ATMOSPHERIC DEWPOINT FROM AIRCRAFT

4. DESCRIPTIVE NOTES *(Type of report and inclusive dates)*

A final report on one phase of the problem.

5. AUTHOR(S) *(First name, middle initial, last name)*

Robert E. Ruskin

6. REPORT DATE June 12, 1968	7a. TOTAL NO. OF PAGES 16	7b. NO. OF REFS 11
8a. CONTRACT OR GRANT NO. NRL Problem A03-14 b. PROJECT NO. A37-540-000/652-1/R004-02-01 c. d.	9a. ORIGINATOR'S REPORT NUMBER(S) NRL Report 6725 9b. OTHER REPORT NO(S) *(Any other numbers that may be assigned this report)*	

10. DISTRIBUTION STATEMENT

This document has been approved for public release and sale; its distribution is unlimited.

11. SUPPLEMENTARY NOTES	12. SPONSORING MILITARY ACTIVITY Department of the Navy (Naval Air Systems Command) Washington, D.C. 20360

13. ABSTRACT

By cooperative efforts of government and industry, the absolute measurement of atmospheric humidity has now become practical under operational aircraft flight conditions by use of thermoelectrically cooled dewpoint hygrometers with optical detection of condensate and automatic mirror temperature control. Effects of salt contamination can be minimized by in-flight check and adjustment of the dew thickness control level with the contamination present on the mirror. Interfacing of the sensor and aircraft is not amenable to a universal solution for all aircraft; but a mounting arrangement has been developed to permit in-flight adjustment of flow and pressure at the sensor. On Navy Constellation aircraft, a radome can be used as a rain deflector to reduce the entry of liquid water while flying in hurricanes or other precipitation. Mechanical aspiration of the sensor can remove accumulated water in rain and permit measurement of dewpoint on the ground. However, because the dynamic heating evaporates water at any aircraft surface or instrument, data in clouds or precipitation in general must indicate humidity greater than saturation with any type of hygrometer. Total evaporation of cloud water can provide useful information on the total water content of the clouds with a dewpoint instrument designed for this purpose.

DD FORM 1 NOV 65 1473 (PAGE 1)

S/N 0101-807-6801

Security Classification

Security Classification

14. KEY WORDS	LINK A		LINK B		LINK C	
	ROLE	WT	ROLE	WT	ROLE	WT
Humidity measurement						
Instrumentation for humidity						
Dewpoint hygrometer						
Aircraft dewpoint measurement						
Atmospheric dewpoint, aircraft						
Thermoelectric dewpoint hygrometer						
Automatic optical dewpoint measurement						

DD FORM 1 NOV 65 1473 (BACK)
(PAGE 2)

Security Classification