NRL Report 6625

Availability of Data on Irradiated Materials as Related to Design Requirements for Water Cooled Reactor Pressure Vessels

J. R. Hawthorne and F. J. Loss

Reactor Materials Branch
Metallurgy Division

August 1, 1967

NAVAL RESEARCH LABORATORY
Washington, D.C.

This document has been approved for public release and sale; its distribution is unlimited.

CONTENTS

Abstract	ii
Problem Status	ii
Authorization	ii
SECTION I	1
SUMMARY REVIEW OF AVAILABILITY OF DATA ON MECHANICAL PROPERTIES OF IRRADIATED MATERIALS	1
A. LOW-CYCLE FATIGUE TESTING STUDIES	1
B. HIGH-CYCLE FATIGUE TESTING STUDIES	4
C. BRITTLE FRACTURE RESISTANCE (TRANSITION TEMPERATURE CHARACTERISTICS)	5
D. STATIC LOAD STRENGTH	6
E. RECOVERY OF ORIGINAL PROPERTIES	7
SECTION II	9
SUMMARY OF IRRADIATED FRACTURE MECHANICS TESTING PROGRAMS	9
A. BACKGROUND	9
B. TYPES OF SPECIMENS - ASTM STANDARD	11
C. OTHER SPECIMEN TYPES	12
D. SUMMARY	13
REFERENCES	16
APPENDIX A - Compilation of Irradiated Fracture Mechanics Data	18
APPENDIX B - AEC Heavy Section Steel Technology Program	21

ABSTRACT

NRL has completed a survey of known experimental programs which have contributed to and are attempting to satisfy the data requirements necessary for the development of nuclear reactor pressure vessel specifications and operations. Designer requirements have been set forth in the report "Properties of Irradiated Materials Needed for the Design of Reactor Vessels," by D. W. McLaughlin which was presented as an ASME Research Committee report to the 1966 ASTM Symposium on Effects of Radiation on Structural Metals. This report was the primary reference used in weighing the presentation of data availability against designer requirements. An analysis of individual material properties and problem areas is presented rather than an extensive data compilation. The areas considered are low-cycle and high-cycle fatigue, brittle fracture resistance (transition temperature characteristics and fracture mechanics), static load strength, and recovery of original properties.

PROBLEM STATUS

This is a final report on one phase of the study; work on other phases is continuing.

AUTHORIZATION

NRL Problem 63M01-14
SF 020-01-05-0858
RR 007-01-46-5409
AEC AT(49-5)-2110
USA-ERG-3-67

Manuscript submitted August 1, 1967.

AVAILABILITY OF DATA ON IRRADIATED MATERIALS AS RELATED TO DESIGN REQUIREMENTS FOR WATER COOLED REACTOR PRESSURE VESSELS

INTRODUCTION

This constitutes a special report by NRL to the ASME Research Committee on the Effect of Radiation on Materials as requested by the committee chairman. A report by the above committee entitled, "Properties of Irradiated Materials Needed for the Design of Reactor Vessels, Part 1: Water Cooled Reactors," outlines six major areas of research in which data on irradiated materials behavior are considered essential for reactor vessel design. These areas include low-cycle fatigue, high-cycle fatigue, brittle fracture resistance as evidenced by transition temperature characteristics, brittle fracture resistance related to fracture mechanics, static load strength, and recovery of original properties. Table 1 of the referenced report (reproduced here as Table 1) outlines the range of service conditions over which the materials properties are of major interest in terms of both immediate and long range requirements for design. The following presentation is intended to review known, planned, and anticipated experimental assessments of material performance in these property areas by individual categories.

In the preparation of this report, three major factors were considered: the publication and/or impending publication of summary in-depth data compilations by others, the experimenters' desire as well as need to establish basic trends in irradiation performance (in preference to statistical testing programs), and finally, the fairly recent observation of significant differences in radiation embrittlement sensitivity between structural steels. Also one must recognize that the newer steel compositions, including A533, A543, and A542 as well as A517-E which are being actively considered for advanced reactor designs, have not been available either in time or in sufficient quantity (multiple or large tonnage heats) for extensive radiation effects studies. The studies which revealed the promise of some of these alloys are still largely in the exploratory stages.

* * *

SECTION I

SUMMARY REVIEW OF AVAILABILITY OF DATA ON MECHANICAL PROPERTIES OF IRRADIATED MATERIALS

A. LOW-CYCLE FATIGUE TESTING STUDIES

1. General Status of Research Programs — Advanced exploratory investigations have been performed. Potential problem areas have not been fully defined.

2. Laboratories Involved — The laboratories which are known to have current or previous programs in this area are as follows:

a. Naval Research Laboratory (NRL) — Reverse bend sheet-type specimens; dynamic in-reactor and X-pile testing.

Note: This report was originally presented to the ASME Research Committee on the Effects of Radiation on Materials, February 9, 1967.

Table 1
Summary of Materials Data Needed For Design of Water-Cooled Reactor Vessels

Material Behavior (Property to be Measured)	Immediate Requirement*		Future Requirement		Type of Specimen	Other Test Information*
	Irradiation Temperature	Nvt > 1 Mev	Irradiation Temperature	Nvt > 1 Mev		
Low-cycle fatigue (strain range vs cycles-to-failure)	400 → 600°F in 50°F increments 500 - 550°F	$10^{18} \rightarrow 2\times10^{19}$	650°F	$5\times10^{19} \rightarrow 9\times10^{19}$	Strain-controlled	Cycles-to-failure: 200 → 100,000 1000 → 10,000
High-cycle fatigue (stress vs cycles-to-failure)	400 → 600°F in 50°F increments 500 - 550°F	$10^{18} \rightarrow 2\times10^{19}$	650°F	$5\times10^{19} \rightarrow 9\times10^{19}$	Stress-controlled (unnotched)	Cycles-to-failure: $10^5 \rightarrow 10^7$
Brittle fracture resistance (change in transition temperature)	400 → 600°F in 50°F increments 500 - 550°F	$10^{18} \rightarrow 2\times10^{19}$ $9\times10^{18} \rightarrow 2\times10^{19}$	650°F	$2\times10^{19} \rightarrow 9.5\times10^{19}$	Transition temperature (V-notch Charpy)	Test in accordance with ASTM E-184-62
Brittle fracture resistance (fracture toughness)	400 → 600°F in 50°F increments 500 - 550°F	$10^{18} \rightarrow 2\times10^{19}$ $9\times10^{18} \rightarrow 2\times10^{19}$	650°F	$2\times10^{19} \rightarrow 9.5\times10^{19}$	Fracture mechanics (to be determined)	Plate thickness t = 2-1/2 → 10 in. Flaw size 0.01 t → 1.0 t
Static load strength (tensile and yield strength)	400 → 600°F 500 - 550°F	$10^{18} \rightarrow 2\times10^{19}$ $9\times10^{18} \rightarrow 2\times10^{19}$	650°F	$2\times10^{19} \rightarrow 9.5\times10^{19}$	Any standard tensile specimen	Record percent reduction in area
Recovery of original properties (postirradiation annealing)	400 → 600°F 500 - 550°F	$10^{18} \rightarrow 2\times10^{19}$ $9\times10^{18} \rightarrow 2\times10^{19}$			Transition temperature (V-notch Charpy), strain-controlled if required	Measure recovery after irradiation and rate of damage during re-irradiation

*Overall requirement range is listed first. The portion of the range which should receive most emphasis is listed second and underlined.

b. Bettis Atomic Power Laboratory (Bettis) — Axial tension-compression specimens; X-pile testing.

c. Idaho Nuclear Corp. (INC) — Axial tension-compression specimens; X-pile testing; in-reactor testing (planned).

d. Southwest Research Institute (SwRI) — Uniaxial tensile fatigue specimens; X-pile testing.

e. United Kingdom Atomic Energy Authority-Culcheth (UKAEA-Culcheth) — Reverse bend sheet specimens; X-pile testing.

f. Centre National d'Recherches Metallurgiques (CNRM) — Axial tension-compression specimens; reverse bend specimens; X-pile testing (planned).

3. Discussion of Programs and Availability of Data — Investigations, which have been largely exploratory in nature, are seeking to qualify both the direction of possible radiation-induced changes in low-cycle fatigue resistance and the general extent of such changes. From the design standpoint, the experimenters have set out to determine first if an engineering problem exists, and secondly if one exists, the extent of the changes in fatigue properties. Unfortunately, the pursuance of these studies is difficult from the technical standpoint since not only the singular effects of irradiation must be established but also the combined or simultaneous effects of a nuclear and a physical stress environment must be explored necessitating in-reactor testing.

The primary problem regarding the singular effects of irradiation stems from the increase in yield and tensile strength concurrent with a loss in tensile ductility. A cross-over between preirradiation and irradiation test curves representing strain versus cycles to failure could be projected as the outcome of this dual effect. Furthermore, the point of cross-over would delineate the change in competing mechanisms from that of ductility-controlled to strength-controlled fatigue resistance. Experimental results from exploratory programs suggest that this might, in fact, be the case, as follows:

a. NRL (1-4)

(1) Heavy section A212-B plate; reverse bend tests. In-reactor tests at 500°F to $\sim 1\times10^{19}$ n/cm^2 (>1 Mev) (maximum) suggest an improvement in fatigue resistance over preirradiation properties in the range of $N = 10^3$ to 10^5 cycles.

(2) Heavy section A302-B plate (2 heats); reverse bend tests. In-reactor tests at 500°F and at 550°F to a maximum neutron fluence of $\sim 1\times10^{19}$ n/cm^2 (>1 Mev) did not reveal any reduction in fatigue resistance when compared to preirradiation properties in the range of $N = 2\times10^3$ to 2×10^5 cycles.

b. Bettis — Heavy section A302-B steel (2 heats) and A212-B steel (1 heat); axial fatigue tests. Postirradiation ambient temperature tests on specimens irradiated at 450-470°F up to 10^{19} n/cm^2 (>1 Mev), using both smooth and notched specimen configurations, showed that "irradiation tended to raise the endurance limit and reduce the low-cycle fatigue life somewhat." (5)

c. INC — Heavy section A302-B steel and A212-B steel (1 heat each); axial fatigue tests. The ambient temperature fatigue properties of both steels were examined before and after irradiation at 60°C to 4×10^{17} n/cm^2 (>1 Mev). It was found that, "for A302-B steel in the region tested, the fatigue life of irradiated samples appeared to be reduced in the high strain-range region and increased slightly in the low strain-range region" (6). This laboratory also reported that "within the cycle ranges of 10,000 to 100,000 for plain and irradiated fatigue data, there is no discernible difference in the behavior of A212-B at the irradiation level tested...." (6).

d. SwRI — Heavy section A302-B and A105 Grade II steel plate and weld overlayed A105 Grade II to 304 stainless steel dissimilar weldments; uniaxial fatigue tests. Specimen irradiations are still in progress as part of the Elk River Reactor (ERR) Surveillance Specimen Program. Examination of the effects of fabrication on fatigue resistance of ERR vessel shell material is one of the objectives of the program (7).

e. UKAEA-Culcheth — COMOLO I steel; reverse bend strain controlled fatigue tests. The ambient temperature fatigue properties of this steel before and after irradiation at 140°C to a neutron fluence of 10^{19} - 10^{20} n/cm^2 (>1 Mev) were examined using 3/4 x 7 x 1/4 in. thick test specimens. Above N = 10^3 cycles, some slight improvement in fatigue resistance was observed while below N = 10^3 cycles, a slight decrease in fatigue life was found (8).

f. CNRM — Radiation studies planned. Reference 9 outlines the general program.

4. Summary of Observations — The available experimental data, though very limited due to the exploratory nature of the tests to date, appear quite consistent in suggesting that fatigue resistance improves with irradiation for the strain range corresponding to N = 10^3 to 10^4 cycles or greater. At higher strains (N less than 10^3 cycles), the data would suggest that some reduction in fatigue life occurs as commensurate with the known loss in tensile ductility. The magnitude of this reduction, however, for neutron fluences currently projected for pressure vessels in service, would appear small or insignificant from the available data. The effect of irradiation on fatigue resistance, therefore, would not seem to be a problem with regard to reactor vessel design.

The industry must recognize that the full potential for radiation-induced changes has not been explored because the majority of research programs thus far have studied only crack initiation characteristics. From a design standpoint, one usually considers a structure to contain cracks or flaws of a size equal to at least the lower threshold of the nondestructive testing means employed during fabrication or periodic in-service examination. Thus, experimental information on fatigue developed so far may not be the most critical assessment or the most useful. However, crack initiation aspects entailed one of the easiest approaches available to experimentors to point out if a greater fatigue problem exists in a nuclear environment than in a nonnuclear environment. This work was a significant beginning in a long unexplored area.

The real question which ultimately must be answered is that of crack propagation rates in a nuclear versus nonnuclear environment. Only when this is known accurately can the fatigue problem be dismissed (or design controlled), and fracture mechanics as discussed in the following sections can be applied accurately. Such information will also aid in the realistic establishment of the number of necessary component inspections during nuclear service operation. Hopefully, the studies of crack propagation rates under irradiation will be planned to allow correlation with similar studies of the unirradiated state. In particular, the separate effects of corrosion (10-12) and aging embrittlement as found by several different laboratories may influence irradiation results and must be acknowledged in such investigations.

B. HIGH-CYCLE FATIGUE TESTING STUDIES

1. General Status of Research Programs — Studies of high-cycle fatigue resistance of irradiated steels (N greater than 10^5 cycles) have not, in general, been actively or intentionally pursued by U.S. or foreign laboratories. Limited evaluations have been performed in conjunction with studies of low-cycle fatigue described in Part A above.

2. Laboratories Involved — Information on high-cycle fatigue has been developed through corollary programs at NRL (1-4), Bettis (5), INC (6), and UKAEA-Culcheth (8).

3. Discussion of Programs and Availability of Data — Specific programs for the exploration of the effects of nuclear radiation on the high-cycle fatigue resistance of structural steels have not been undertaken. Aside from problems of an experimental or technical nature, the nonperformance of such programs has stemmed from the secondary emphasis placed upon such studies as opposed to the need for studies of low-cycle fatigue. Fortunately, however, data developed in low-cycle fatigue testing in the failure range of 5×10^4 to 10^5 cycles are very indicative of material performance in the high-cycle fatigue test range. Specifically, a trend toward improvement in high-cycle fatigue life has been suggested by the results of more than one laboratory, both for in-reactor testing and for X-pile testing. While not observed in every case, these data, coupled with known concomitant increases in yield and tensile strength with irradiation, considerably reduce the uncertainties of the possible development of detrimental effects in the high-cycle fatigue range.

C. BRITTLE FRACTURE RESISTANCE AS EVIDENCED BY TRANSITION TEMPERATURE CHARACTERISTICS

1. General Status of Research Programs — Comprehensive in-depth investigations have been undertaken; however, observations of variable radiation embrittlement sensitivity among materials has hampered the generation of "handbook type" information. Efforts to isolate metallurgical factors causing variable sensitivity have been undertaken by several U.S. and foreign laboratories, but these efforts are still largely exploratory.

2. Laboratories Involved — Laboratories in the U.S. with current or previously concentrated programs in this area are NRL, ORNL, Bettis, and GE-APD. Foreign laboratories are UKAEA-Culcheth, Aktiebolaget Atomenergi and ISPRA.

3. Discussion of Programs and Availability of Data — Over the past decade, a great amount of experimental information has been generated on brittle fracture resistance of irradiated structural steels as evidenced by their transition temperature characteristics. One primary outlet for such information, as developed by both U.S. and foreign laboratories, has been the ASTM symposia and their publications. However, only a very limited number of summary reports or compilations of the data from the several laboratories have been issued. This has been due in large part to the difficulties in interpreting the various test data (specimen design; test equipment), in correlating neutron fluences described by several modes, and in some cases, in determining whether or not the steel investigated had received special metallurgical treatment. Therefore, the assemblage of data from technical journals and other media is a major, if not a most arduous task. Fortunately, the various society committees, particularly those of the ASTM, have set out to recommend standardized procedures for the procurement and reporting of data (13). Similarly, test machine intercalibrations have been undertaken by laboratories participating in the AEC Irradiation Effects on Reactor Structural Materials Program. Thus, data developed within the past 5 to 6 years are more readily analyzed, intercompared, and evaluated.

One current effort toward compilation of data on the irradiation of structural steels is the AEC sponsored "Pressure Vessel Technology Report," now in preparation at ORNL (G. Whitman, editor). As currently planned, one section of this report will deal strictly with notch ductility properties and radiation effects (14). Earlier reports, in which a serious attempt to compile existing data in these areas have appeared, include the following:

L. F. Porter, "Radiation Effects in Steel," ASTM Special Technical Publication No. 276, Materials in Nuclear Applications, 1960, pp. 147-196

F. R. Shober, "Effects of Nuclear Radiation on Structural Metals," REIC No. 20, Sept. 15, 1961, Battelle Memorial Institute, Columbus, Ohio

L. E. Steele and J. R. Hawthorne, "Neutron Embrittlement of Reactor Pressure Vessel Steels," NRL Report 5984, October 22, 1963; MIT Technology Press, Materials and Fuels for High Temperature Nuclear Energy Applications, Chapter 16, pp. 336-407, (1963)

L. P. Trudeau, Radiation Effects on Toughness of Ferritic Steels for Reactor Vessels, ASM Monograph Series on Metallurgy in Nuclear Technology (1964)

Other data summaries representing the partial efforts of a given laboratory are also found in ASTM symposia publications on this subject.

Initially, it was hoped that precise relationships between transition temperature increase and neutron fluence for given exposure temperatures could be developed which would encompass all steels, regardless of their composition or metallurgical history. Recently, increasing evidence of gross variations in radiation embrittlement sensitivity among steels or even among different heats (Fig. 1) of the same steel composition, rules out the establishment of an exact universal "formula" for predicting radiation embrittlement. Thus, the designers' request for a single set of guidelines, or alternatively, for individual material design curves, for use over the temperature and fluence increments listed in Table 1 are unrealistic as well as unattainable from current technology. A relatively large scale experimental effort, now underway, to determine the causes of variable radiation embrittlement sensitivity may allow such a request in the future. However, the combined as well as the individual effects of many metallurgical factors require assessment before a general understanding of radiation embrittlement sensitivity will be possible.

D. STATIC-LOAD STRENGTH

1. General Status of Research Programs — In-depth studies of static load strength have been underway for some time but with less emphasis than fatigue or brittle fracture resistance investigations.

2. Laboratories Involved — The primary information sources are ORNL, Bettis, BNL, General Atomic (biaxial tension test data), UKAEA-Culcheth, and Aktiebolaget Atomenergi.

3. Discussion of Programs and Availability of Data — In contrast to brittle fracture resistance studies, investigations of static load strength received a reduced emphasis after the advanced exploratory stage. Performance subsequently gravitated toward a much reduced effort because a general improvement in strength with irradiation was observed. However, a significant decrease in ductility, uniform strain, and work-hardening capability also occurred with irradiation which is magnified in the case of biaxial testing. These detrimental effects have yet to prompt an acceleration of studies to develop data trends useful in design. The promotion of stronger emphasis on irradiated tensile properties behavior by designers must necessarily be preceded by the fuller definition of the proposed use, method of evaluating the information, and the point at which their analysis will deem a critical design or safety problem to exist. As an example, in the case of severe losses in ductility in a multi-axial stress state (such as at a nozzle region or at a section-size transition), specific information on the transition from a safe to a potential problem case will be essential if experimentors are to properly program irradiation and test conditions in the best interests of design.

In judging the magnitude of changes in tensile properties of a given type of steel, it is expected that the designer will be faced with a similar problem as was encountered

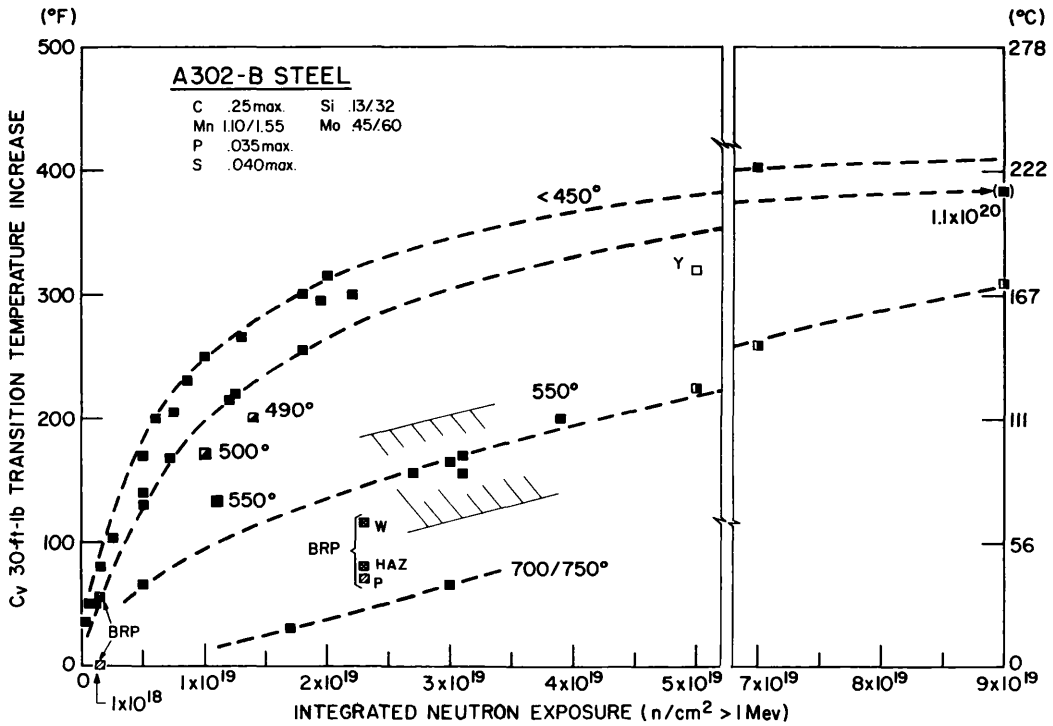

Fig. 1 - The trend in Charpy-V 30-ft-lb transition temperature increase of one heat of A302-B steel (two plate sections) is shown as a function of neutron exposure. The cross-hatched zone about the 550°F trend line and the surveillance points labeled BRP (Big Rock Point Reactor) demonstrate the degree of variation in radiation embrittlement sensitivities possible among different heats and different steel forms.

in predicting its degree of embrittlement due to variations in radiation sensitivity among steels. From studies of brittle fracture resistance, he may, in some cases, also anticipate through-thickness variations in radiation sensitivity of heavy section steel. Possible gradients in tensile properties change have not been explored in depth although some experimental information on conventional pressure-vessel steels is expected in the near future. In the area of advanced materials, the relative performance of the newer steels, including A533, A542, and A543 as well as A517-E, have yet to be established in depth. However, available data on these and the older steels for both ambient and elevated temperature test conditions will be compiled in the AEC sponsored "Pressure Vessel Technology Report."

In brief, investigations of the static-load strength of pressure vessel and other structural steels have, and will continue, in general, to receive secondary emphasis in radiation effects programs. A change in emphasis will only occur at the designer's request or if some metallurgical anomaly is observed which necessitates a more detailed study.

E. RECOVERY OF ORIGINAL PROPERTIES

1. General Status of Research Programs

a. With one exception, investigations of the potential for recovery of original properties of various steels by heat treatment or by other means are largely in the exploratory or advanced exploratory stages. Research findings of these programs may be found in ASTM symposia proceedings.

b. Annealing data generated by NRL and other laboratories have shown that annealing response and residual embrittlement is a function of: steel composition, prior irradiation temperature, prior neutron exposure, annealing temperature, and annealing duration.

c. Questions which have yet to be answered are whether or not heat-to-heat variations in steel recovery response exist, and if temper embrittlement characteristics (or susceptibility) are modified by irradiation.

2. Laboratories Involved — Intermediate and postirradiation annealing studies are being conducted as part of a research program at the following laboratories:

a. NRL — Postirradiation annealing; multicycle intermediate annealing.

b. ORNL — Postirradiation annealing.

c. Bettis — Postirradiation annealing; intermediate annealing.

d. UKAEA-Culcheth — Postirradiation annealing.

3. Discussion of Programs and Availability of Data — The potential of intermediate heat treatment for embrittlement relief of reactor pressure vessel and other structural steels is becoming more recognized. To illustrate, plans for the intermediate annealing of the Army SM-1A reactor pressure vessel were announced recently. Pending the detailed experimental assessment of the annealing response of the vessel steel, A350-LF1 (Mod.), present Army plans project the use of nuclear heat alone to achieve the vessel's heat treatment. NRL results for the exploratory <250°F irradiation of this steel with intermediate annealing at either 585°F (nuclear heat) or 700°F (auxiliary heating) are shown in Figs. 2 and 3. It may well be that the embrittlement of this steel can be easily

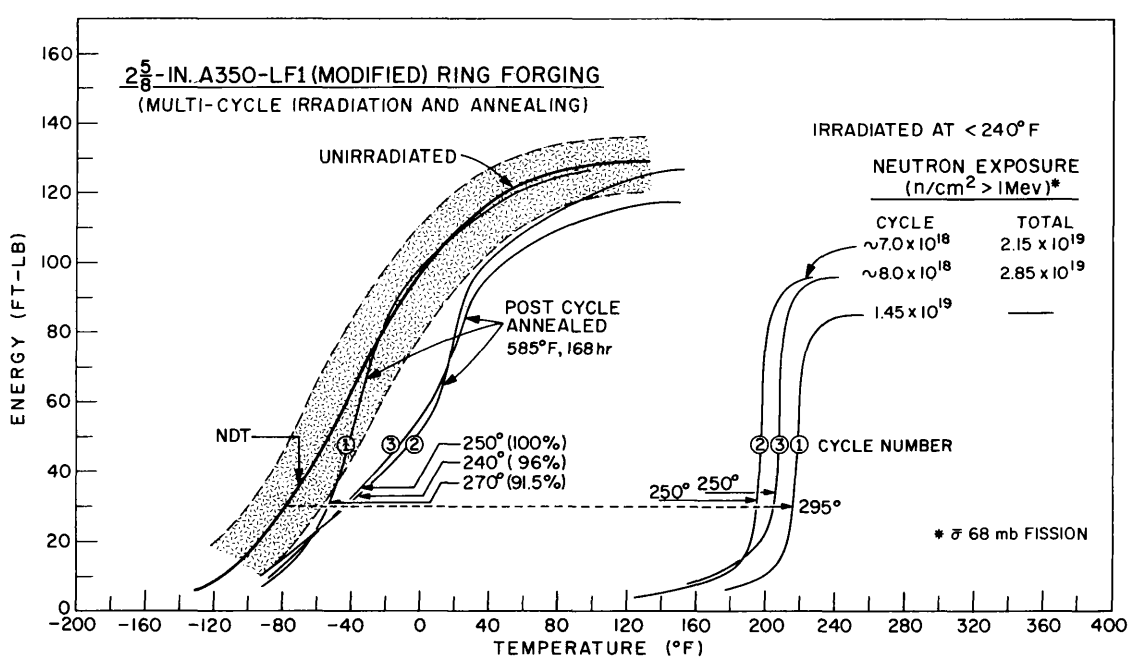

Fig. 2 - Transition temperature behavior of A350-LF1 steel with cyclic irradiation and intermediate 585°F annealing

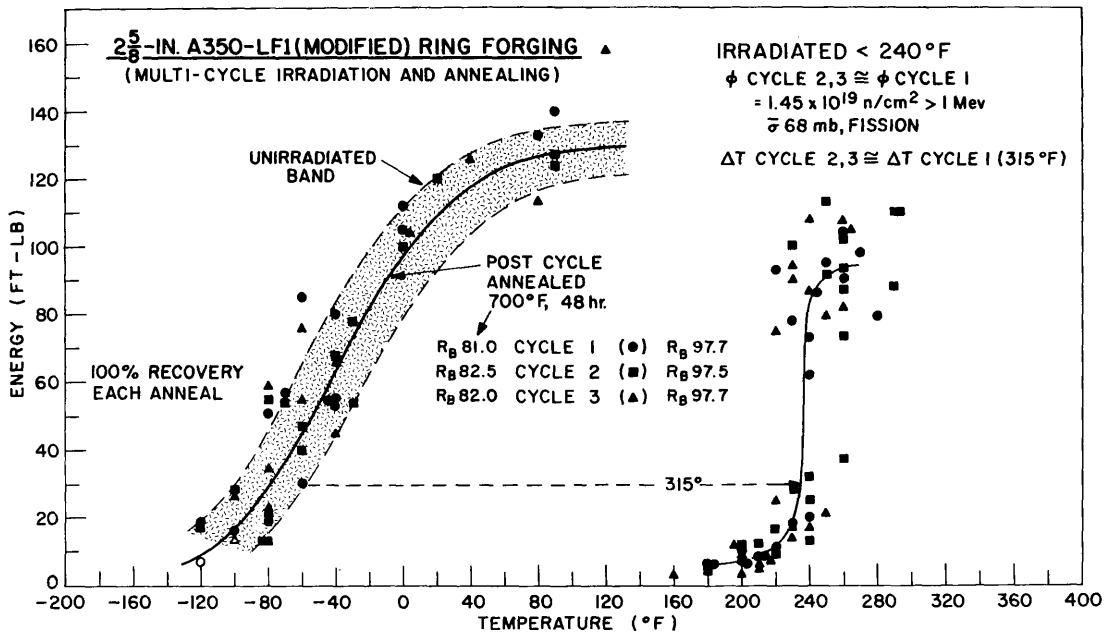

Fig. 3 - Transition temperature behavior of A350-LF1 steel with cyclic irradiation and intermediate 700°F annealing

kept below the maximum allowable value. The summary response of this steel to annealing heat treatments for <250°F and 430°F service irradiations has been presented at the ANS Meeting in San Diego, June 1967.

Although the potential for recovery of original material properties by heat treatment has been recognized, experimentors have not yet fully established trends in annealing response for all steels of interest. Specific attempts have not been made to summarize annealing data developed by the several laboratories to date. At the moment, trend development is hampered by such anomalies as in the case of the A350-LF1 (Mod.) steel which shows a relatively high radiation embrittlement sensitivity but on the other hand, a high response to postirradiation heat treatment. The state of the art, however, is such that intermediate annealing response can be fully qualified and applied in the individual case as illustrated by the SM-1A reactor.

SECTION II

SUMMARY OF IRRADIATED FRACTURE MECHANICS TESTING PROGRAMS

A. BACKGROUND

The field of linear elastic fracture mechanics in its present form has come into being only in the last decade. It was developed primarily for use with high strength materials having a yield stress to modulus ratio of about 0.006 and greater. However, high strength materials have not been used extensively in high radiation environments. Rather, low strength, high toughness steels having yield strengths under 100 ksi have been used. Difficulty is encountered when testing the latter class of materials by linear

elastic fracture mechanics methods mainly because of their high toughness in the useful temperature range. This toughness coupled with low yield strength results in a large plastic zone around the crack front in small test specimens, thereby permitting the relaxation of the plane strain conditions. This results in invalid tests. Consequently, there has been relatively little emphasis on low strength, high toughness materials in the fracture mechanics community and even less emphasis on irradiated tests of these metals. As little as five years ago, not a single irradiated test had been conducted, and even now the number of such tests made public is less than two hundred, encompassing four or five different materials. Such testing has been done primarily in the United States.

Recently, increased emphasis has been placed on the possibilities of catastrophic failure of nuclear pressure vessels. This has given the field of fracture mechanics an impetus by stimulating the designers' quest for more quantitative flaw size-stress level relationships then are currently available for structures of low strength, high toughness materials. Of these materials, A302-B and its nickel modification, A533-B, have been the most widely used steels for water cooled reactor pressure vessels being built today. Therefore, A302-B has been used almost exclusively in fracture mechanics irradiation testing. (A smaller emphasis has been placed on the irradiation of fracture mechanics specimens using fuel cladding materials such as Zircalloy-2.) The specified minimum yield strength for A302-B is 50 and 70 ksi for Classes I and II respectively. Future applications in the next 10 years may include A542 and A543, but the yield strengths will not greatly exceed 100 ksi. Thus, the class of low strength, high toughness materials will continue to receive primary emphasis in the nuclear industry.

Although fracture mechanics may provide the needed answers in the future, the extent of its applicability to nuclear pressure vessels in its current state of development is debatable. The difficulty with the above low strength, high toughness materials from the fracture mechanics testing aspect is that they all display a transition temperature behavior. Above this temperature, a rapid increase in toughness takes place which results in a loss of plane strain conditions around the crack front. Consequently, for small specimens approximately 1 inch thick, it has not been demonstrated that valid fracture mechanics K_{Ic} values can be obtained much in excess of the nil ductility transition (NDT) temperature. The difficulty can be avoided to some extent by increasing the thickness of the test specimen. Whether or not valid test conditions will be obtained by testing very large specimens (from 12-inch plate) cannot be stated with confidence until specimens of this size are actually tested.

Another difficulty with the low strength, high toughness steels is their toughness dependence on strain rate. With increased specimen loading rates above the usual "static" type loading, K_{Ic} for a mild steel can decrease by 50%. Thus, for design purposes the usefulness of all the static determinations of K_{Ic} on rate sensitive steels could be seriously impaired. This is a relatively unexplored area which is being examined by several laboratories.

When reactor structural materials are irradiated, the increase in yield strength is accompanied by a decrease in toughness or resistance to fracture. This enables valid fracture mechanics tests to be made at room temperature with irradiated specimens of 1 inch thick or less. Thus, an incentive is provided for the development of irradiation testing. Again, it is doubtful if valid data can be obtained much above the NDT temperature unless the radiation damage is so severe as to drastically lower the Charpy-V energy shelf. The new AEC Heavy Section Steel Technology Program (Appendix B) will undoubtedly answer questions along these lines, since irradiation tests of large fracture mechanics specimens will be achieved within the next several years.

B. TYPES OF SPECIMENS - ASTM STANDARD

To date there are about ten different types of fracture mechanics specimens. The task of standardizing these specimens and developing test procedures is being accomplished mainly by ASTM Committee E-24 on Fracture Testing of Metals. This committee is working on a recommended practice for plane strain fracture toughness testing of high strength metallic materials using a crack-notch bend specimen. For a given geometry, the absolute dimensions of a specimen depend on the toughness level to be measured. The geometry of the recommended ASTM specimen is shown in Fig. 4. The design is tentative pending final publication of the recommended practice by ASTM.

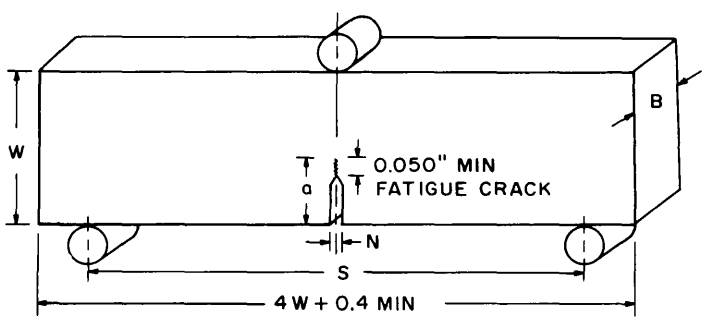

$S/W = 4$

$W/B = 2$ (ALTERNATE $1 < W/B < 4$)

$0.45 < a/W < 0.55$ (CRACK LENGTH NOMINALLY EQUAL TO THICKNESS B)

$$N = \begin{cases} 1/8 & B < 1 \\ 1/4 & 1 < B < 2 \\ 3/8 & B > 2 \end{cases}$$

$$B \text{ AND } a > 2.5 \left(\frac{K_{IC}}{\sigma_{ys}}\right)^2$$

σ_{ys}/E	MIN RECOMMENDED a AND B
0.0057 TO 0.0062	2.50 INCHES
0.0062 0.0065	2.00 INCHES
0.0065 0.0068	1.75 INCHES
0.0068 0.0071	1.50 INCHES
0.0071 0.0075	1.25 INCHES
0.0075 0.0080	1.00 INCHES
0.0080 0.0085	0.75 INCHES
0.0085 0.0100	0.50 INCHES
0.0100 OR GREATER	0.25 INCHES

Fig. 4 - The ASTM recommended crack-notch bend specimen for three-point loading. The dimensions are in inches.

Using this specimen configuration and dimensional requirements, it is interesting to speculate on the required size needed for valid tests on A302-B steel around the transition temperature. Good guesses for K_{Ic} and yield strengths (σ_{ys}) within this region might be 80 ksi-$\sqrt{\text{in.}}$ and 65 ksi respectively. The ASTM requirement states that the thickness (B) must satisfy the relation

$$B > 2.5 \left(\frac{K_{Ic}}{\sigma_{ys}}\right)^2$$

For this example, the specimen thickness would have to be almost 4-in. for a valid test in the unirradiated condition. Of course, if K_{Ic} at the NDT temperature is closer to 100 ksi-$\sqrt{\text{in.}}$, then a specimen of 6 in. thickness is required and it still would not have enough capacity to measure toughness levels above the transition temperature. Specimens of this size would weigh 1/2 ton or more and are impractical for even unirradiated testing. However, Wessel (15) has indicated that it may be possible to reduce the factor of 2.5 in the above relation to 1.5 for A302-B. On the other hand, a 2.5 or greater factor appears necessary for an 80-ksi-yield-strength forging steel in the same reference. Perhaps in time a recommended practice for testing low strength, high toughness material will evolve that may not require specimens as large as tentatively proposed by the ASTM. However, until such time there is no other standard to go by.

C. OTHER SPECIMEN TYPES

Four different fracture mechanics specimens have been irradiated to date. They are the center-cracked plate, single edge notch (SEN), double cantilever beam (DCB), and wedge opening loading (WOL) specimens. The thickest specimen irradiated has been the 1-in. WOL and the thinnest has been the 0.10-in. SEN. These specimens are illustrated in Figs. 5 through 9. Appendix A lists the irradiation conditions under which they have been examined. Only two of the above four are currently being irradiated, the WOL-1X and DCB. A third specimen, the NRL drop weight tear test (DWTT) specimen is planned for irradiation testing as is the WOL-1T specimen. Each of the four specimens that have been or will be irradiated in the near future is described briefly below.

1. DCB — The DCB specimen is shown in Fig. 5. A modified form is the contoured DCB specimen (Fig. 6). Several K_{Ic} measurements are obtainable from a single

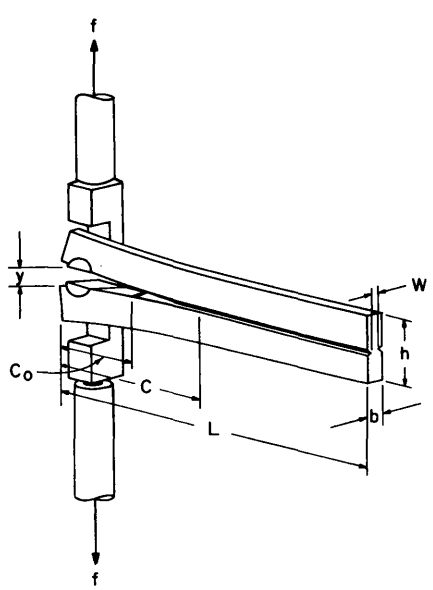

SPECIMEN DIMENSIONS
INCHES

L	h	b	W	Co
7	1	0.250	0.130	1-1/2

Fig. 5 - The DCB specimen and loading arrangement developed by Battelle-Pacific Northwest Laboratory

specimen since a crack, once initiated, will arrest itself. Therefore both initiation and arrest K_{Ic} values are obtainable. Crack front velocity may be determined from the load decay rate. Battelle-Northwest and Materials Research Laboratory are the developers and main users of the specimen.

2. WOL — The WOL-1X specimen is shown in Fig. 7. An optimized design of this type, the WOL-Type T, is shown in Fig. 8. The WOL specimen has been designed and used mainly at Westinghouse. It is a crack-line loaded specimen as is the DCB and its chief advantage lies in its compact size for irradiation purposes.

3. DWTT — The DWTT specimen conforms to the geometry of the ASTM recommended practice. It is designed to yield valid K_{Ic} values in the applicable range and also to be used as a simple engineering test to index the toughness of material both above and below the transition temperature in an impact test. NRL is developing and using the specimen. The DWTT specimen is shown in Fig. 9 along with the center-cracked plate specimen and SEN specimen.

D. SUMMARY

Application of the ASTM recommended practice results in unmanageable specimen sizes for unirradiated testing of reactor pressure steels at the NDT temperature and above. The reduced toughness of irradiated steels will permit the use of smaller size specimens. However, this does not solve the problem of correlating the toughness of irradiated steels with the toughness of unirradiated steels at a reactor operating temperature of 550°F which is far above the transition temperature for the unirradiated steel. Hopefully, the irradiations portion of the AEC Heavy Section Steel Technology Program will clarify many uncertainties. The strain rate sensitivity of pressure-vessel steels presents an added complication which is currently under investigation.

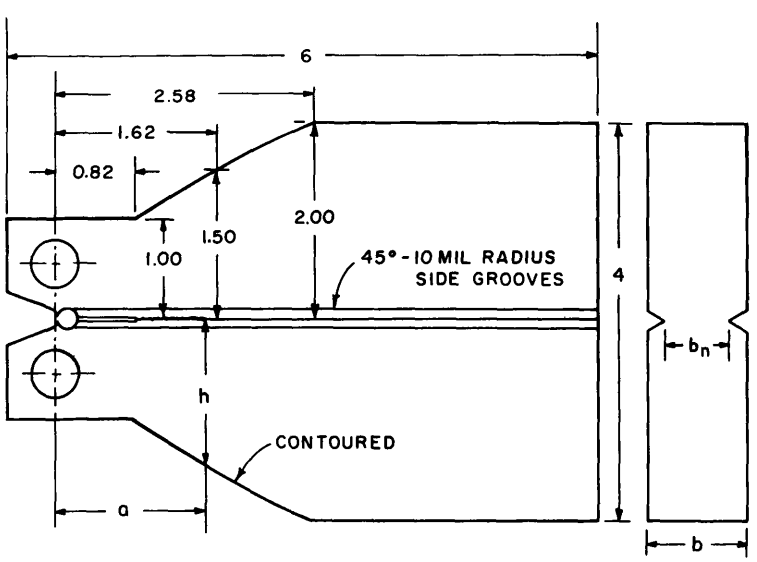

Fig. 6 - The contoured DCB specimen developed by the Materials Research Laboratory and used for testing unirradiated materials. Size for the irradiation-test specimen has not yet been determined. The dimensions are in inches.

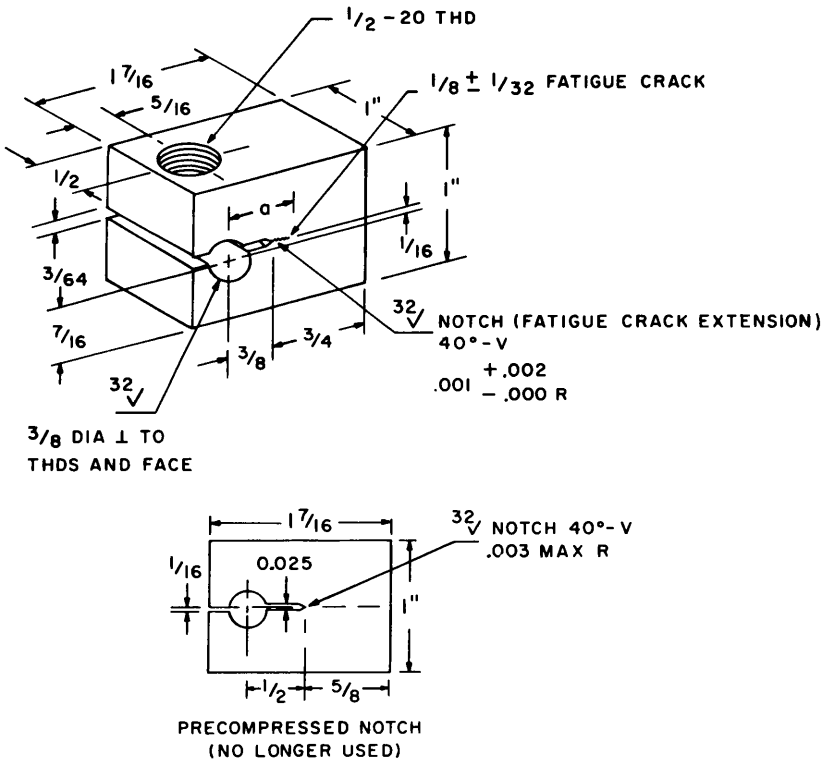

WOL SPECIMEN DIMENSIONS			
IDENTIFICATION	1X	2X	4X
THICKNESS	1.0	2.0	4.0
WIDTH	1.44	2.88	5.75
LENGTH	1.0	2.0	4.0
CRACK LENGTH (a)	0.5	1.0	2.0

Fig. 7 - The Westinghouse WOL-Type X specimen. A WOL-1X specimen is shown with the standard fatigue-cracked notch. The precompressed notch is no longer used. The dimensions are in inches.

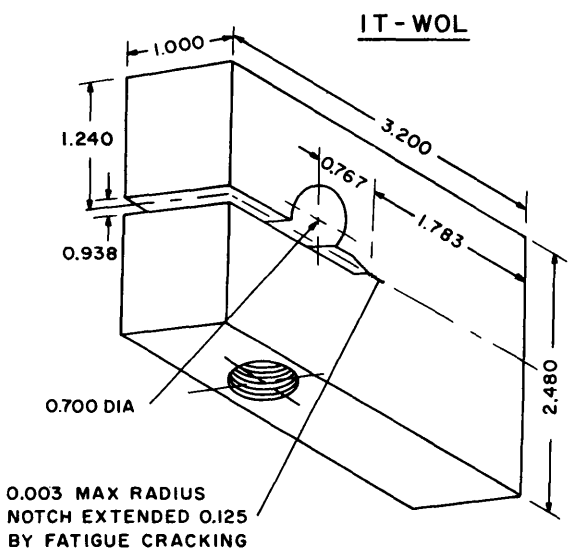

WOL T-TYPE DIMENSIONS (OPTIMUM DES.)				
IDENTIFICATION	1T	2T	3T	4T
THICKNESS	1.0	2.0	3.0	4.0
WIDTH	3.2	6.2	9.2	12.0
LENGTH	2.5	5.0	7.5	9.9
CRACK LENGTH	0.9	1.8	2.7	3.6

Fig. 8 - The WOL-Type T specimen illustrating the optimum design. A WOL-1T specimen is shown. The dimensions are in inches.

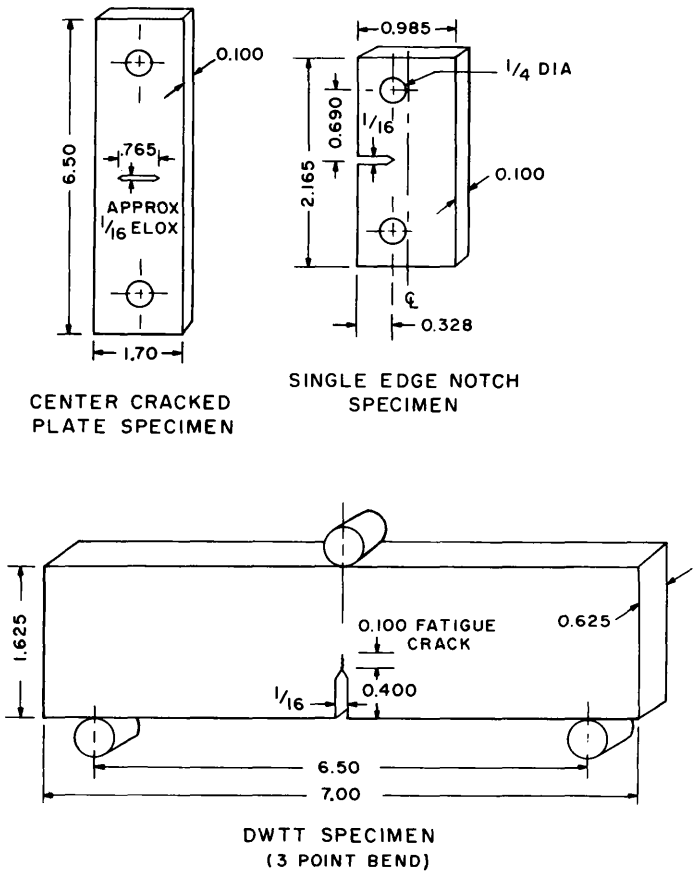

Fig. 9 - NRL center-cracked plate, single edge notch, and DWTT specimens. The dimensions are in inches.

REFERENCES

1. Hawthorne, J.R., and Steele, L.E., "In-Reactor Studies of Low Cycle Fatigue Properties of a Nuclear Pressure Vessel Steel," NRL Report 6127, July 27, 1965; ASTM STP 380, "Flow and Fracture of Metals and Alloys in Nuclear Environments," 1964, pp. 312-322

2. Hawthorne, J.R., and Steele, L.E., "The Effect of Testing During Irradiation on the Fatigue Resistance of Nuclear Reactor Pressure Vessel Steels," NRL Report of Progress, Mar. 1965, pp. 34-36

3. Hawthorne, J.R., and Steele, L.E., "In-Reactor Fatigue Tests of A302-B Steel Representing the Elk River Reactor Pressure Vessel," NRL Memo. Rept. 1596, Feb. 15, 1965

4. Steele, L.E., et al., "Irradiation Materials Evaluation and Reactor Pressure Vessel Surveillance for the Army Nuclear Power Program," NRL Memo. Rept. 1644, Sept. 1, 1965

5. Gibbons, W.G., Mikoleit, A.E., and O'Donnel, W.J., "Fatigue Properties of Irradiated Pressure Vessel Steels," WAPD-T-1864, June 1966; presented to ASTM Symposium on Effects of Radiation on Structural Metals, June 29–July 1, 1966

6. Brinkman, C.R., and Beeston, J.M., "Axial Fatigue of Pre- and Post-Irradiated A302-B and A212-B Steels," IN-105, Jan. 2, 1967 (TID-4500)

7. McDonald, J., and Watson, P.D., "Investigation of the Effects of Fabrication on the Properties of ERR Pressure Vessel Materials," SwRI 1228-4-17, Mar. 14, 1966

8. Nichols, R.W., "Effects of Irradiation on Pressure Circuit Steels," presentation at Libby-Cockcroft Exchange Meeting, Brookhaven National Laboratory, 22-24 June 1966

9. Salkin, R., "Study of Embrittlement by Plastic Fatigue of Steels for Reactor Vessels," EURAEC 1349, Apr. 1965

10. Crooker, T.W., and Lange, E.A., "Low Cycle Fatigue Crack Propagation Resistance of Material for Large Welded Structures," to be published in ASTM STP 415, "Fatigue Crack Propagation"

11. Gross, M.R., "Low Cycle Fatigue of Material for Submarine Construction," Naval Engineers Journal 75(No. 4) (Oct. 1963) pp. 783-795

12. Boblenz P.L., and Rolfe, S.T., "Corrosion Fatigue Characteristics of HY-80, 5Ni-Cr-Mo-V, 12Ni-5Cr-3Mo, and 18Ni-8Co-3Mo Steels," USS Applied Research Lab Report 39.018-002(37), (S-23308-2), Jan. 1, 1966

13. ASTM Standards, 1961, Part 3, "Methods of Testing Metals"

14. R.G. Berggren, Oak Ridge National Laboratory, Private communications to J.R. Hawthorne

15. Wessel, E.T., "State of the Art of the WOL Specimen for K_{Ic} Fracture Toughness Testing," Westinghouse Research Laboratories Report 67-1D6-BTLFR-R1, Mar. 22, 1967

Appendix A

COMPILATION OF IRRADIATED FRACTURE MECHANICS DATA

BATTELLE-NORTHWEST LABORATORY

Past and Present Work

Specimen:	Double cantilever beam (DCB) (Fig. 5)
Material:	Zircaloy-2, A302-B
Irradiation Conditions:	A302-B - 5×10^{18} to 4×10^{19} nvt (>1 Mev) at 540°F Zr-2 - 8×10^{19} to 8.7×10^{20} nvt (>1 Mev) at 280°C
Test Temperatures:	A302-B, -180 to -40°C Zr-2, -140 to 40°C
Number of Specimens:	A302-B - about 4 Zr-2 - about 25

Comments

Mainly Zr-2 has been tested in the irradiated condition to date. The effect of irradiation on the fracture toughness of Zr-2 has been investigated in the annealed, cold worked, and hydrided conditions. Future studies will include a determination of toughness profiles across welds and heat affected zones (HAZ) to assess the effects of welding practice and metallurgical variables in pressure vessel steels. Work is underway to measure toughness gradients associated with through-the-thickness variation in chemistry and microstructure caused by certain mill practices. Environmental and temperature effects on crack growth will be examined using the DCB specimen.

In the future, extensive irradiated testing is contemplated in connection with the AEC Heavy Section Steel Technology (HSST) program (Appendix B).

BETTIS ATOMIC POWER LABORATORY

Past and Present Work

Specimen:	Wedge opening loading (WOL-1X) (Fig. 7)
Material:	A302-B
Irradiation Conditions:	0.08×10^{22} to 17×10^{22} Dt barns/cm^2 at 410 - 450°F [Equivalent nvt guessed to be 0.03×10^{19} to 9×10^{19} nvt (>1 Mev)]
Test Temperature:	-300 to 500°F
Number of Specimens:	About 100 (about 1/3 with fatigue cracks, others with precompressed notch)

Comments

Several heats of A302-B were tested. Fracture toughness as a function of microstructure was examined for one heat with the material in the as-received, annealed, and Q&T conditions. The tests were run using slow ("static") loading conditions and valid results could not be obtained much in excess of the NDT temperature with the 1X specimen. All of this data will be published by Bettis in a few months. Future fracture mechanics work by this laboratory with pressure vessel steels was not obtainable.

Another organization (probably Battelle-Columbus) will test 18-1X and 2-2X specimens cut from the irradiated PM-2A pressure vessel which was tested to failure. This pressure vessel was made of A350-LF3 steel and irradiated at 510°F. Preliminary estimates indicate that the vessel fluence is about 9×10^{18} nvt (>1 Mev).

MATERIALS RESEARCH LABORATORY

Only unirradiated fracture mechanics tests have been conducted to date. However, irradiated tests are planned in conjunction with the AEC Heavy Section Steel Technology Program (Appendix B). The materials to be tested are A-533 and HY-80, and the specimen to be used is the contoured double cantilever beam specimen illustrated in Fig. 6. The size for the irradiated specimen has not been firmly established, but it is hoped to be equal in length to two C_v specimens and in cross sectional area equal to 4 to 6 C_v cross sections.

The present work is examining the effect of strain rate on fracture toughness through the use of different loading rates. The optimum side grooving for valid K_{Ic} measurements is being determined.

NAVAL RESEARCH LABORATORY

Past and Present Work

Specimen:	Center-cracked plate (not fatigue cracked) (Fig. 9)
Material:	A212-B and A350-LF3
Irradiation Conditions:	1.36×10^{20} nvt (>1 Mev) at <350°F
Test Temperature:	-120° to 80°F
Number of Specimens:	16

Specimen:	Single edge notch (SEN) specimen (fatigue cracked) (Fig. 9)
Material:	A212-B and A350-LF3
Irradiation Conditions:	2.50×10^{20} nvt (>1 Mev) at <350°F
Test Temperature:	80° to 230°F
Number of Specimens:	22

Comments

The above specimens were tested at various loading rates to determine the influence of strain rate on K_{Ic}. Future work will use the drop weight tear test (DWTT) specimen configuration shown in Fig. 9. Tests on various irradiated reactor pressure vessel steels will be conducted in a 3-point bend, fracture mechanics fashion under variable loading rates to assess variation of K_{Ic} with strain rate. DWTT using a pendulum impact will also be run with the same irradiated specimen geometry in an effort to correlate the results of an existing engineering test with K_{Ic} obtained by other means. DWTT and fracture mechanics tests with the DWTT specimen using material from the failed PM-2A pressure vessel are being planned.

WESTINGHOUSE ATOMIC POWER DIVISION

Past and Present Work

Specimen:	Wedge opening loading (WOL-1X) (Fig. 7)
Material:	A302-B and A543
Irradiation Conditions:	3 to 8×10^{19} nvt (>1 Mev) at 550°F
Test Temperature:	Up to 200°F
Number of Specimens:	About 25 (most with compressed notch, others with fatigue cracks)

Comments

The above specimens included studies on welds and HAZ. All tests were conducted using slow load application.

Future plans under the Euratom program include irradiating WOL specimens of the 1X and newer 1T (Fig. 7) types, all having fatigue cracks. Specimens will come from two heats of A533 including welds and HAZ. A European forging comparable to A508 will also be tested. The irradiation conditions for both experiments will be about 3×10^{19} nvt (>1 Mev) at 550°F.

Another study will examine the effects of stress under irradiation by placing wedges in the WOL specimens during irradiation. Westinghouse is now using the WOL-1X as a surveillance specimen in all of its new plants as standard procedure.

Appendix B

AEC HEAVY SECTION STEEL TECHNOLOGY PROGRAM

In conjunction with the recent AEC funded program on heavy section steels initiated by the PVRC, the AEC is embarking on a rather extensive study of irradiation effects in heavy section steels as part of its Heavy Section Steel Technology (HSST) Program. Under AEC auspices, the problem of irradiation effects on reactor structural materials has been under investigation for some time. The present irradiation effects program has been based primarily on the use of the Charpy V-notch impact test specimen with a somewhat lesser effort given to the irradiation of fracture mechanics specimens such as the DCB and WOL.

Up to the present time irradiated fracture mechanics specimens have been tested in thicknesses of 1 in. or less. However, lower, unirradiated values of fracture toughness (in terms of K_{Ic}), have been obtained with larger specimens, as opposed to small specimens, using material at the same temperature and metallurgical conditions. This is particularly true of low strength, high toughness materials typical of reactor pressure vessels. The experimental result is evidence of increased restraint in the larger size specimen. Thus, a heavy-walled vessel may exhibit lower fracture toughness than a thin-walled vessel. This would seem to indicate the need for large surveillance specimens, but this is impractical. Hence the alternate course is to perform check tests in the large specimen sizes and correlate them with small specimen behavior. The first of these check test specimens will be available from the irradiated PM-2A pressure vessel. This vessel is only 2-3/8 in. thick and does not provide the desired range of specimen thicknesses to thoroughly examine the restraint condition. Since no other irradiated vessel is available for testing, a heavy section program will soon be started to obtain large fracture mechanics specimens and investigate the irradiated as well as unirradiated toughness of heavy section steels. Plans are underway to irradiate a 4-in.-thick steel to a fluence of 2 to 3×10^{19} nvt (>1 Mev).

It is expected that such work may be done by Battelle-Northwest using large DCB and WOL-4X specimens. Since small specimens will be obtained from the broken larger ones, this program should result in a significant increase in the available irradiated fracture mechanics data. It will enable a comparison to be made between the fracture toughness of large section steels having irradiation and metallurgical gradients and small size specimens having little or no gradients.

This page intentionally left blank.

Security Classification

DOCUMENT CONTROL DATA - R & D

(Security classification of title, body of abstract and indexing annotation must be entered when the overall report is classified)

1. ORIGINATING ACTIVITY *(Corporate author)* Naval Research Laboratory Washington, D.C. 20390	2a. REPORT SECURITY CLASSIFICATION Unclassified 2b. GROUP

3. REPORT TITLE

AVAILABILITY OF DATA ON IRRADIATED MATERIALS AS RELATED TO DESIGN REQUIREMENTS FOR WATER COOLED REACTOR PRESSURE VESSELS

4. DESCRIPTIVE NOTES *(Type of report and inclusive dates)*
This is a final report on one phase of the program.

5. AUTHOR(S) *(First name, middle initial, last name)*

J.R. Hawthorne and F.J. Loss

6. REPORT DATE August 1, 1967	7a. TOTAL NO. OF PAGES 26	7b. NO. OF REFS 15

8a. CONTRACT OR GRANT NO. NRL Problem M01-14 b. PROJECT NO. RR 007-01-46—5409 SF 020-01-05—0858 c. USA-ERG-3-67 d. AEC-AT(49-5)-2110	9a. ORIGINATOR'S REPORT NUMBER(S) NRL Report 6625 9b. OTHER REPORT NO(S) *(Any other numbers that may be assigned this report)* Memorandum Report

10. DISTRIBUTION STATEMENT

This document has been approved for public release and sale; its distribution is unlimited.

11. SUPPLEMENTARY NOTES Also sponsored by the Atomic Energy Commission	12. SPONSORING MILITARY ACTIVITY Office of Naval Research, Naval Ship Systems Command, and Army Nuclear Power Program

13. ABSTRACT

NRL has completed a survey of known experimental programs which have contributed to and are attempting to satisfy the data requirements necessary for the development of nuclear reactor pressure vessel specifications and operations. Designer requirements have been set forth in the report "Properties of Irradiated Materials Needed for the Design of Reactor Vessels," by D. W. McLaughlin which was presented as an ASME Research Committee report to the 1966 ASTM Symposium on Effects of Radiation on Structural Metals. This report was the primary reference used in weighing the presentation of data availability against designer requirements. An analysis of individual material properties and problem areas is presented rather than an extensive data compilation. The areas considered are low-cycle and high-cycle fatigue, brittle fracture resistance (transition temperature characteristics and fracture mechanics), static load strength, and recovery of original properties.

DD FORM 1 NOV 65 1473 (PAGE 1)

S/N 0101-807-6801

Security Classification

Security Classification

14. KEY WORDS	LINK A ROLE	LINK A WT	LINK B ROLE	LINK B WT	LINK C ROLE	LINK C WT
Nuclear pressure vessels						
Low-cycle fatigue						
High-cycle fatigue						
Brittle fracture						
Fracture mechanics						
Static load strength						
Annealing						
Irradiation testing						
Transition temperature						
Designer's requirements						

DD FORM 1 NOV 65 1473 (BACK) GPO 934-245 24

(PAGE 2)

Security Classification