NRL Report 6628

Large Antenna Systems

MERRILL I. SKOLNIK

Radar Division

December 29, 1967

NAVAL RESEARCH LABORATORY
Washington, D.C.

This document has been approved for public release and sale; its distribution is unlimited.

CONTENTS

Abstract	i
INTRODUCTION	1
LIMITATIONS TO ANTENNA SIZE	3
Mechanical Limitations	3
Environmental Effects	4
Random Errors	5
Measurement Limitations	7
Beam Pointing	7
Signal Distortions Caused by Spatial Bandwidth	7
Limitations Due to Propagation Medium	8
Pattern Measurement	8
LARGE ANTENNAS	9
Dipole and Other Low-Directivity Antennas	9
Steerable Reflector Antenna	9
Reflectors with Reduced Volumetric Coverage	11
Fixed Reflector and Steerable Feeds	11
Lens Antennas	12
Traveling-Wave Antennas	12
Array Antennas	12
Arrays of Antennas	13
Multiple Flat Plates (Multiplate Antenna)	15
TIME-SHARED APERTURE	16
Aperture Synthesis	17
Synthetic Aperture	21
REFERENCES	24

ABSTRACT

Large antennas are of importance in radar, communications, and radio astronomy applications where sensitivity and/or angular resolution are important. However, several major limitations exist to the achievement of large size antennas. Among the limitations are mechanical and environmental factors, measurement limitations, spatial bandwidth, and the effects of random errors. Mechanical factors seem to limit the tolerance achievable in present practical antennas to about one part in 10,000, more or less. This tolerance results in an antenna size of less than 400 wavelengths, corresponding to beamwidths of about 1/6 degree. Larger antennas are possible, but usually with degraded performance. Many of the limitations due to the environment can be overcome by operation inside a radome, although the radome itself will impose a limit on the antenna size.

Several common antenna types can be constructed in large sizes. The parabolic reflector in one of its many forms is the most common example of large antennas, whether movable or fixed. Array antennas with low gain elements are expensive in large sizes because of the large number of elements that they must contain. However, arraying of a modest number of large directive antennas is an attractive method for achieving large aperture and is widely employed by the radio astronomer.

Aperture synthesis as practiced by the radio astronomer and synthetic aperture as employed by the radar engineer are methods for achieving the effect of a large antenna by time-sharing an aperture of modest or small size. Although they are equivalent to large physical apertures in many respects, some methods of achieving time-shared apertures result in reduced signal-to-noise ratio when compared with the "equivalent" real aperture.

Manuscript submitted August 16, 1967.

LARGE ANTENNA SYSTEMS

INTRODUCTION

Large antennas with directive radiation patterns have been widely employed in radar, land and space communications, telemetry, and radio astronomy. The basic theory and application of antennas apply to the large antenna as well as to any other antenna. This report reviews some of the special problems of large antennas and briefly describes representative types. Its purpose is primarily tutorial.

"Large" is a word not always easy to define precisely and is generally applied in a relative manner. Microwave radar antennas in World War II were large if they were tens of feet in major dimension. A little more than ten years later, large microwave antennas were those which were measured in hundreds of feet. The lower the frequency, the easier it is to achieve a large antenna. The MUSA antenna developed in the late thirties for transatlantic short wave (hf) reception was a steerable end-fire phased array of rhombic elements which extended for a distance of two miles. The beamwidth at a wavelength of 16 meters was less than one degree. It is a physically large antenna by present standards as it was then (1). The antenna for a high-power, very-low-frequency (vlf) transmitter can also be a large structure. To radiate one megawatt of power from an antenna at 15 kHz requires 58 km of one-inch-diameter wire properly distributed in a flat-top pattern of wires to give an effective area of about 3 sq km (2).

There are two measures of antenna size: the physical size and the electrical size, where the electrical size is the physical size measured in units of wavelength. Although they are related, one does not necessarily imply the other. Some of the physically largest antennas that operate at vlf are electrically short because of the long wavelength (20 km at 15 kHz frequency). At millimeter wavelengths, on the other hand, a physically small antenna can be large in electrical size.

Since the amount of energy collected by a receiving antenna is directly proportional to the area, a large physical aperture is important for applications where sensitive receiving systems are required. However, when it is desired to concentrate as much radiated energy as possible in a particular direction, as in radar or point-to-point communications, the electrical size is just as important as the physical size. The larger the electrical size the narrower the beam, and the higher the directivity. The narrow beam resulting from a large electrical size is important for good angular resolution and accuracy, desirable features for both radio astronomy and radar. (The physical size also affects angular resolution and measurement accuracy, since they depend on the signal-to-noise ratio which, in turn, is proportional to the effective receiving area of the antenna.) The parameter describing the electrical size of an antenna and its ability to concentrate energy into a directive beam is the directive gain, or directivity D. The effective area A_e is the antenna parameter proportional to the physical size. The effective area and directivity are related by

$$D = 4\pi A_e / \lambda_0^2 \tag{1}$$

where λ_0 is the wavelength.

Note: Part of this report will appear as a chapter in "Antenna Theory," edited by R. E. Collin and F. J. Zucker, to be published by McGraw-Hill Book Co.

The general requirements of an antenna for radar application may be inferred from the familiar radar range equation which states that the maximum range is given by

$$R_{max} = \left[\frac{P_t \, G A_e \, \sigma}{(4\pi)^2 \, S_{min}} \right]^{1/4} \tag{2}$$

where G is the antenna gain and A_e is the effective area. The other parameters (not under the direct control of the antenna designer) are the transmitted power P_t, the target cross section σ, and the minimum detectable signal S_{min}. (The gain G in the radar equation is the power gain. However, the substitution of the directivity D for power gain generally makes little difference in practice.) Note that frequency does not appear explicitly in this equation but enters implicitly via the relation between directivity and effective area of Eq. (1). The product GA_e in the radar equation expresses the fact that for maximum range the transmitted energy should be concentrated into a narrow beam (high directive gain) and the receiving antenna should have a large aperture (large effective area). For a given wavelength, a large aperture is consistent with a high gain.

A large GA_e product is desirable for a radar antenna which continuously illuminates or "searchlights" the target, as does a conventional tracking radar. If the radar must search out a specified angular region in a given time, the important antenna parameter in the radar equation is the antenna effective area A_e. The gain, and therefore the electrical size, of the antenna has no first-order effect on the search radar's detection ability. Since the electrical size is not important, the frequency is also not important so long as a large effective area can be realized in practice.

When a radar system must overpower the deliberate noise of a jammer by "burning through," the critical antenna parameter is the power gain or directivity. Thus it depends on the application whether the electrical or the physical size of a radar antenna is the more important. To "burn through" noise jamming, a large electrical size is required; to search a region of space a large physical size is necessary; and to track (searchlight) a target both a large physical size and a large electrical size are important.

The product GA_e should be large for maximum performance of two-way point-to-point communications for the same reason that a large product is required for a tracking radar. With some applications as, for example, tropospheric scatter communications, there is a practical limit to the antenna size that can be usefully employed due to the inhomogeneous nature of the propagating medium.

In most telemetry applications, the transmitting antenna is located on a vehicle under test and must be of limited size. An electrically small transmitting antenna eliminates the need for pointing the beam. The low gain, however, must be compensated by a receiving antenna of large aperture if sensitivity is important.

The above discussion indicates that in communications, radar, and telemetry where sensitivity is marginal, a large effective aperture is a desirable objective. However, in some applications of radio astronomy, sensitivity (and thus collecting area) is not always a limitation. The radiating sources of interest to the radio astronomer permit a long observation period. Furthermore, the statistics of the noise-like signals from astronomical sources generally do not change with time. With these conditions, the lack of a large collecting aperture can be compensated by an increase in observation time. The radio astronomer, however, is decidedly interested in angular resolution. Resolution is important since weak, distant sources must be seen in the presence of strong, close sources. Optical astronomers achieve good angular resolution, and the radio astronomer would like a similar ability. Because of the 10^5 to 10^6 factor separating the wavelengths of the optical and the radio radiations, it is not easy for the radio astronomer to do as well as his optical counterpart. The radio astronomer cannot employ the range or doppler

separation so successfully exploited by the radar engineer to sort wanted from unwanted targets. He must depend on angular resolution alone. The beamwidth must not only be narrow, but also the sidelobes cannot be too high. A goal of the radio astronomer is to achieve a beamwidth of one minute of arc. To achieve this at a wavelength of 21 cm (corresponding to the radio emission of hydrogen) requires an antenna 2400 ft in dimension.

LIMITATIONS TO ANTENNA SIZE

Although antenna theory does not explicitly dictate a fundamental limitation to the size of an antenna, there are practical reasons why an aperture cannot be made arbitrarily large. Practical limitations are basically economic ones and, in principle, can be overcome with enough time and effort if it were desired to do so. However, the cost of large antennas increases rapidly with increasing size and can quickly become economically prohibitive. In this section, the various factors which limit the size or quality of an antenna will be briefly discussed. The thorough understanding of antenna limitations, however, requires more detailed treatment than the cursory review presented here. Unless otherwise specified, the paraboloidal reflector will be taken as the example of a large antenna. It is a versatile antenna and has been widely applied.

The quality of an antenna deteriorates when the desired phase and amplitude of the aperture current cannot be maintained. Deviations from the desired radiation pattern are caused by imperfections (random or systematic) in the physical structure of the antenna, errors in establishing the necessary phase and amplitude of the aperture current distribution, or by the nonuniform properties of the medium through which the energy propagates. One of the results of the analysis of random errors in array antennas is that for a given error in amplitude or phase, the relative effect on the radiation pattern is less important the larger the antenna. However, systematic errors might be more important with large antennas and can be the dominant source of error. The effect of the systematic error is not reduced with increasing antenna size as is a random error.

Mechanical Limitations

It is difficult to maintain an antenna perfectly rigid under wind, gravitational, and dynamic (inertial) forces. In large sizes, steel beams are relatively flexible. The surface of a reflector antenna and the position of its feed can change with orientation due to the pull of gravity. Thus an antenna with a good pattern measured under ideal conditions when pointing to the zenith might have a poor pattern when pointing along the horizon. Both the gain and the pointing direction can depend on orientation. When only gravity affects the surface, experience with the radome-enclosed MIT Haystack antenna indicates it is possible to design the structure so as to compensate for gravity and make the gain essentially independent of pointing angle. This arrangement is possible because the effect of gravity on the antenna is predictable. If the antenna is computer controlled, a calibration could be provided to correct the angle "read-outs" when the electrical axis (main beam) of the antenna does not correspond to the mechanical axis because of gravitational effects. This adjustment is easier to achieve when the antenna is enclosed in a radome than when it is exposed to wind and thermal gradients. One method for calibration is to sight on known radio stars. The availability of computer control is a necessity if the ultimate in performance is to be achieved with a large antenna.

Rather than attempt to maintain large antennas perfectly rigid, the mechanical deformations may be compensated by an adjustable profile controlled by a closed loop servo. With such techniques a compliant antenna structure can have almost unlimited effective rigidity against disturbing forces, provided they do not change rapidly. Closed-loop control can adjust for manufacturing and assembly errors, aging of structural components, loading due to ice, thermal distortions, gravitational forces, slowly changing

wind loads, and inertial forces from gentle steering acceleration. Closed-loop control is not effective for rapidly varying forces as might result from turbulent wind, structural resonances, and inertial forces caused by rapid steering acceleration. Some form of measuring system is needed to determine when the surface is in error. Optical sensors are often used as the error-detecting device.

Instead of compensating the surface of the paraboloid, it may be possible to compensate for distortions by employing a Cassegrain configuration and adjusting the secondary reflector surface. With a conventional front-fed paraboloid a multi-element feed might be used with adaptive circuitry to provide the necessary compensation.

The mechanical structure on which the antenna is mounted and the equipment for positioning the antenna must be of an accuracy commensurate with that of the reflector. Generally, it is easier to achieve the desired accuracy of the mount than it is for the reflector.

Mechanical sag can be avoided if the reflector is supported by the ground. Examples of antennas scooped out of the earth are the Cornell University 1000-ft-diameter spherical-surface antenna at Arecibo, Puerto Rico, and the 400 by 600 ft parabolic cylinder at the University of Illinois (3). Limited scanning of the beam of a fixed reflector antenna is achieved by positioning of the feed. Scanning in this manner, since it is limited in angle, is not suitable for all applications, but it has been employed with success in radio astronomy and radar astronomy. The rigidity of the ground also may be taken advantage of to achieve large total apertures by using many smaller-aperture antennas spaced over a wide area and properly connected together, a technique widely exploited by the radio astronomer.

Environmental Effects

The thermal expansion of materials imposes a practical limit to the performance of large antennas exposed to the environment. A constant temperature across the aperture need present no particular design problem. Temperature differentials, however, can cause the antenna to expand or contract unevenly. The thermal coefficient of expansion for many common metals is of the order of one or two parts per 10^5 per degree Centigrade. The amount of temperature differential that can be allowed depends on the accuracy to which the surface must be maintained. In the construction of large antennas attention must be paid to such practical details as the type of paint used, if the absorption of heat from the surroundings or from the sun is to be minimized and made as uniform as possible. Even under what seem to be relatively uniform temperature conditions, temperature differences of $\pm 1^\circ$C seem to be ever present in large antennas. These differences are probably due to the microclimatic effects of thermal eddies from the ground and random cooling effects of wind gusts. Radiant heat from the sun can produce relatively severe temperature gradients in the antenna structure. On a ten-meter-diameter aluminum antenna it has been found that a temperature difference of about 15°C can exist when the antenna is exposed to the sun (4).

The wind can cause structural deformation which can degrade the radiation pattern and the beam pointing. If the wind is sufficiently great it can collapse the antenna. As the wind speed increases, the power required to steer the antenna also increases. The mechanical design of large antenna structures is complicated by the gustiness of the wind and the differences in wind strength and direction with height. Steady-state analysis and wind-tunnel testing do not always give the complete story, since wind loadings on antennas are not always smooth and uniform. In applications such as radio astronomy, the antenna can be shut down in high wind and stowed in a safe position. In military applications the antenna must be designed to operate reliably in high winds.

A mesh reflector surface is often used on large antennas to reduce the weight and the wind loading. So long as the mesh size is small compared to the wavelength, the loss in rf leakage through the mesh is small. In localities subject to icing the ice can close the reflector mesh, and the mechanical designer must design as if the surface were solid when determining the effects of wind.

The deleterious effects of wind and temperature can be removed by operating within a radome, which is either an air-inflated plastic bag or a rigid plastic structure. For the extremely large sizes necessary to enclose large antennas, the plastic skin constituting the radome surface is sometimes supported by a metal space frame. The frame intercepts and scatters a small fraction of the energy radiated by the antenna. This, plus the dielectric losses in the radome material, will result in a reduction in the gain and an increase in the antenna noise temperature. Rain on the radome can cause further degradation. Also, there may be a deflection of the radiated beam when propagating through the radome, with a subsequent error in the angle measurement. Although these effects exist, in a well-designed system degradations introduced by a radome are slight for many applications and can usually be tolerated for the advantages that result from its use. In addition to avoiding structural distortions by the wind and temperature, the absence of large wind forces within a radome results in less drive-power requirement for the antenna if the antenna need not be accelerated rapidly. Radomes several hundred feet in diameter seem to be feasible. There are economic and technical limits to the size of radomes, however, so the largest antennas might not always be able to take advantage of operation inside a protective structure. The choice of whether or not to utilize a radome depends upon the particular requirements of the antenna system, and each case must be evaluated separately.

Random Errors

The desired radiation pattern determines the current distribution (amplitude and phase) across the antenna aperture. The ability to achieve the desired radiation pattern depends on the accuracy of the mechanical construction and the accuracy with which the phase and amplitude of the aperture current can be maintained. One source of inaccuracy is the random error introduced in the manufacturing process. Nothing can be made with zero error. There is always some tolerance allowed in the precision of manufacture. It is important to know what effect random errors have on the antenna radiation pattern, so that the designer can properly specify the permitted tolerance.

The classical analysis of random errors for arrays or aperture antennas can be used as the basis for quantitatively specifying the necessary tolerance in either the mechanical construction or the aperture current (5). In assessing the accuracy requirements, it is necessary to select some criterion for describing the degradation of performance that can be tolerated. This criterion might be the reduction in gain, the rise in the sidelobe level, or the displacement of the beam from its boresight. Other criteria might also be used. Generally, in many practical situations, it is found that the deterioration of the sidelobes occurs to a relatively more significant degree than the degradation of the other antenna properties and often is the determining factor in the specification of the allowable tolerances. For purposes of illustration, however, the reduction in antenna gain (directivity) with errors is easier to examine and will be offered as an example in this section.

With certain assumptions, the directivity of a reflector antenna when errors are present is approximately (5)

$$\frac{\overline{D}}{D_0} \approx \exp\left(-\overline{\delta^2}\right) \tag{3}$$

where $\overline{D}$ is the ensemble average of the directivity of a large number of similar antennas with similar statistical errors, D_0 is the directivity in the absence of errors, and $\overline{\delta^2}$ is the mean square error in the phase of the aperture current. Since the directivity depends on the random errors, it is a statistical quantity which must be described in statistical terms. Hence Eq. (3) is the statistical average and describes the property of a collection of similar antennas rather than any individual one. For shallow reflectors in which the only contribution to the phase error is the deviation of the surface from the required shape, $\overline{\delta^2} = (4\pi/\lambda_0)^2 \overline{\Delta^2}$, where $\overline{\Delta^2}$ is the mean-square mechanical distortion of the reflector surface measured in the same units as the wavelength λ_0. (A factor of 2 is included in this expression to account for the double effect a reflecting-surface distortion has on the phase error.) It is assumed in Eq. (3) that the region of the aperture over which the errors are correlated is large compared to the wavelength; that is, the phase error is relatively unchanged over a distance equal to the wavelength. This assumption is often met in practice (4). The other assumptions required for Eq. (3) to apply are: (a) the errors are uniformly distributed over the aperture, (b) the errors over a region defined as the correlation interval C are independent of the errors in other regions of the aperture, (c) the phase errors, or deviations from the best-fit paraboloid are random and are described by a Gaussian probability density function, and (d) the amplitude illumination taper does not vary appreciably over the region in which the errors are correlated. The correlation interval C describes the average distance over which the errors are substantially constant. Equation (3) applies for $C >> \lambda_0$ but does not require that the errors be small nor that the aperture illumination be uniform. When $C << \lambda_0$, the average directivity in the presence of small reflector errors is (5)

$$\frac{\overline{D}}{D_0} \approx 1 - \frac{3}{4} \frac{C^2 \pi^2 \overline{\delta^2}}{\lambda_0^2} . \tag{4}$$

The average directivity from Eq. (3) can be written as

$$\overline{D} = \pi^2 \left(\frac{d}{\lambda_0}\right)^2 \rho_a \exp\left[-\left(\frac{4\pi}{\lambda_0}\right)^2 \overline{\Delta^2}\right] \tag{5}$$

where the no-error directivity has been written as $(4\pi A/\lambda_0^2)\rho_a$, A is the physical area of the aperture ($A = \pi d^2/4$), d is the diameter of the circular aperture, ρ_a is the aperture efficiency, and $\overline{\Delta^2}$ is the mean-square aperture distortion Δ. If no more than a 1-db reduction in directivity can be tolerated, Eq. (5) indicates that the ratio of diameter and wavelength must not exceed

$$\frac{d}{\lambda_0} \leq 0.038(\overline{\xi^2})^{-1/2} \tag{6}$$

where $\overline{\xi^2} = \overline{\Delta^2}/d^2$ is the mean-square distortion relative to the aperture dimension and is a measure of the surface precision. If the error is one part in 10,000, $(\overline{\xi^2})^{1/2} = 10^{-4}$, the aperture can be no larger than 380 wavelengths if the directivity is to decrease, on the average, no more than 1 db. The beamwidth of a 380-wavelength antenna is approximately 1/6 degree. From Eq. (6) the corresponding rms error in the distortion Δ can be no greater than 0.038 wavelength. The reduction in directivity because of mechanical errors is an important consideration in system design, since there may be little point in constructing a poor large antenna if its gain is no better than a smaller one of more precise construction. If the coefficient of thermal expansion is one part in 10^5 per degree C, Eq. (6) indicates that the temperature differentials across a 1000-wavelength aperture should be no greater than about 3° or 4°C to avoid more than a 1-db reduction in gain.

Before the availability of studies of statistical errors in antennas (5), practical antenna engineers found from experience that if the mechanical tolerance of a reflector antenna could be maintained to within $\pm \lambda_0/32$, the radiation pattern would be satisfactory for most purposes. (The tolerance in a nonreflector radiator, such as a lens or an array, would be $\pm\lambda_0/16$ by the same standard.) This is a suitable "short-hand" rule-of-thumb for antenna tolerances that can be applied when more elaborate analysis is not warranted. For an aperture with a one-degree beamwidth ($d = 65\lambda_0$) the relative rms tolerance is about one part in 2000. From Eq. (3) this corresponds to a reduction in gain of about 0.7 db.

Measurement Limitations

One of the more fundamental factors limiting the accuracy of an antenna surface is the accuracy with which the physical measurement of length can be made. Lengths of 100-ft steel tape such as are used in surveying, engineering, manufacturing, and construction can be calibrated in the U.S. National Bureau of Standards laboratory (6) to one part in 10^5. The 1000-ft Arecibo antenna and the 210-ft Australian paraboloid have an accuracy of about one part in 10^4. The MIT Lincoln Laboratory Haystack Hill antenna (120-ft diameter paraboloid operating at X band) and the antenna at the USSR Lebedev Physics Institute (72-ft diameter paraboloid operating up to 0.8 cm wavelength) both seem to have surface tolerances significantly better than one part in 10^4. It should be mentioned that it is not necessary that surface distortions be measured relative to the nominal design shape. Errors can be measured relative to the paraboloid of revolution which best fits the actual surface at any time.

Beam Pointing

Mechanical limitations as well as errors in the aperture currents can result in errors in the pointing of the antenna beam. Even if the distribution of the aperture currents of a reflector antenna could be maintained perfectly, there might still be a limit to the practical size of the antenna because of the uncertainties in the location of the antenna beam. If the beam is sufficiently narrow, it may be difficult to point accurately, and a loss in "effective" gain can result. An antenna which cannot be positioned more accurately than say half the beamwidth is probably better replaced with one of smaller size which can be accurately pointed. Pointing the beam of the 120-ft diameter Haystack antenna with its 0.05-degree beamwidth requires the aid of a high-speed digital computer. Operation within a radome eliminates most of the external forces which can limit pointing accuracy. By compensating the systematic pointing errors in the control instructions supplied by the computer, the peak uncertainty in pointing the Haystack antenna is 0.003 degree (7).

Signal Distortions Caused by Spatial Bandwidth

A signal incident at some angle other than broadside to an antenna aperture, be it a reflector, lens, or an array, will not appear simultaneously at all points on the aperture. This differential can result in a finite time for the signal to build up. By analogy to the conventional filter of circuit theory, the antenna is said to have a spatial bandwidth due to its finite response time. This factor can place a limit on the maximum signal bandwidth. The larger the antenna the greater will be the time to respond, and hence the narrower the spatial bandwidth. The difference in time between the arrival of the signal at the ends of an aperture of extent d, when the source direction is at an angle θ to the aperture-normal, is

$$t_r = (d/c) \sin \theta \tag{7}$$

where c is the velocity of propagation. For example, if the antenna were 100 meters in extent and if the angle of arrival were 45 degrees, the response time would be 0.23 μsec. Assuming that the spatial bandwidth is approximately the reciprocal of the rise time, a signal of bandwidth greater than 4.3 MHz would be distorted.

In a reflector antenna which is mechanically positioned to point in the direction of the source of radiation, the finite response time is generally small and can be ignored, since the maximum angle of interest [θ in Eq. (7)] from which energy arrives with respect to the aperture-normal is approximately equal to the beamwidth. A phased array antenna, on the other hand, is steered electrically, and the angle (with respect to the normal) from which energy arrives might be as great as 60 degrees. An array in which the rise time is of concern can be compensated by employing true time delay at each element rather than modulo 2π radian phase shifters.

Limitations Due to Propagation Medium (8)

The medium through which the electromagnetic wave propagates is not always homogeneous. Variations in the atmosphere's dielectric constant can cause differential phase changes across the wavefront, which can alter the radiation characteristics of an antenna in a manner similar to the effect of phase errors. A rise in sidelobe level, beam broadening, and displacement of the beam position can result.

For purposes of analyzing electromagnetic propagation effects, the atmosphere may be divided into two regions: (a) the troposphere, which is the region lying below an altitude of about 20 km, and (b) the ionosphere, a region lying roughly from 80 km to about 300 km. The propagation properties of the two regions are different and must be separately analyzed. The dielectric constant of the troposphere is greater than unity, while that of the ionosphere is less than unity. Propagation in the ionized portion of the atmosphere is more frequency dependent than in the troposphere. At frequencies higher than vhf the effects of the ionosphere can usually be neglected.

The precise effect of the atmosphere on an antenna radiation pattern is difficult to predict because necessary knowledge for analysis of the properties of the atmosphere is difficult to obtain. Required is the distribution of dielectric constant through the region of propagation, along with its variation with time. In most applications, other factors such as those discussed previously in this section enter to limit the size of the antenna before the propagation medium does. A common exception is the case of tropospheric scatter communications, where the atmosphere can be the major limitation to antenna size.

Pattern Measurement

Another practical problem encountered with large antennas is that of measuring the radiation pattern and gain. It is generally desired to measure the radiation pattern in the far field, at a distance of at least D^2/λ from the antenna. With a large microwave antenna, the far field might not begin for distances of several miles or even tens of miles. Ordinary pattern-measurement methods are not adequate. In such cases aircraft or satellites with active sources might be used to measure the pattern. Radio stars are sometimes used for determining the pattern of large antennas for radio astronomy. A measure of the pattern near the axis can also be obtained at distances considerably shorter than D^2/λ by focusing the antenna and measuring the pattern in the focal plane (which is the same as that in the far field, at least in the vicinity of the axis) or by properly interpreting pattern measurements in the Fresnel region.

LARGE ANTENNAS

This section reviews the more common types of antennas that have been or could be employed in physically large sizes.

Dipole and Other Low-Directivity Antennas

The dipole, monopole, loop, rhombic, helix, spiral, log periodic, horn, and similar radiators are characterized as being of low directivity and relatively small electrical size. Dimensions are comparable to wavelengths. Thus to be of large physical size they must operate in the lower frequency regions, where the wavelengths are large. At the lower end of the radio-frequency spectrum, the wavelengths are so long that a physically convenient antenna is generally short compared to a wavelength.

Some of the largest antennas are found in the very low frequency (vlf) range of the spectrum. The Navy's Jim Creek vlf transmitting antenna, located near Arlington, Washington, encompasses 725 acres, of which 435 acres are covered by active radiating elements of the antenna (9). The antenna system consists of ten catenary spans arranged in zig-zag fashion. The lengths of the catenaries varies from 5640 to 8700 ft. The antenna extends 5400 ft in the other dimension. To avoid the need for high towers the catenaries are suspended between mountain tops. This antenna radiates one megawatt of power, and in so doing requires a total antenna current of 2100 amperes. The frequency of operation is from 14.5 to 35 kHz. At the highest frequency the wavelength is 28,000 ft, which is considerably greater than the longest antenna dimension.

In the broadcast band and the medium-frequency band (0.3 to 3.0 MHz), transmitting antennas are generally vertical radiators ranging in height from one-sixth to five-eighths of a wavelength (10). At the broadcast frequency of one megacycle, a quarter-wave antenna would be 75 meters in height. The heights are such that towers may be used as radiators. By employing a capacity "hat" mounted on the tower top, an effective increase in the antenna height is obtained. This "top loading" permits the use of a physically shorter antenna to obtain a desired electrical length. In the broadcast band two or more radiators are often operated as an array to obtain directional patterns, principally to reduce the signal radiated toward other stations so as to minimize interference, and also to increase coverage over populated areas.

Because of the absence of gravitation effects in space, a large antenna deployed from a satellite can be of lighter construction than an equivalent antenna on earth. The NASA Radio Astronomy Explorer satellite is an example of a large simple antenna for space science application (11). It employs two back-to-back "V" antennas, each leg of which is 750 ft in length. Its purpose is to explore cosmic noise in the frequency range from 1 to 10 MHz. These frequencies normally do not penetrate the ionosphere, so that a satellite system can obtain information not possible with an earth-based antenna. The "V" antenna is used because it can be designed to give good performance even if mechanically distorted. Operation in space permits the use of lightweight structures and results in an antenna weighing 420 pounds. The antenna in space, however, is susceptible to differential heating when one side is illuminated by the sun while the other side is dark. The resulting temperature gradients can cause severe distortions of the antenna structure. To avoid temperature differentials care must be exercised in design, and suitable materials must be used to make the temperature across the antenna uniform.

Steerable Reflector Antenna

Just as the dipole antenna is the most common form of low-directivity antenna, the paraboloid reflector mounted so as to be readily positioned in azimuth and elevation is

the chief example of a steerable, highly directive antenna. The paraboloid reflector is a versatile antenna and has the advantage of being able to direct its beam anywhere within hemispherical coverage. Its beam is essentially symmetrical, and it can be designed to operate over a wide frequency band. However, the larger its size the more difficult it is to steer mechanically. Paraboloids 50 to 120 ft in diameter are relatively common and can be designed to operate at the higher microwave frequencies (X band and slightly beyond). The NRL 50-ft-diameter reflector that is mounted on top of the main building at the laboratory was the world's first large precision parabolic reflector used for radio astronomy. It was placed in service in 1953 and has been operated at wavelengths as short as 8 mm.

Two examples of well-designed paraboloid reflectors in this size range are the 22-meter (72-ft) diameter reflector of the Lebedev Physical Institute, USSR known as the PT-22 (Ref. 12), and the radome-enclosed 120-ft diameter Haystack antenna of the MIT Lincoln Laboratory (13). The Lebedev reflector is a precision antenna with a surface accuracy of 0.50 mm (one part in 44,000). The antenna has been operated at 8-mm wavelength, where its effective area is claimed to be 150 square meters, or an efficiency of almost 40 percent. The Haystack antenna avoids many of the mechanical problems that accompany large antennas by operating inside a 150-ft-diameter metal-space-frame radome with fiberglass panels 0.32 in. thick. The rms tolerance of the reflector is estimated as 0.05 in., which corresponds to an accuracy of one part in about 30,000. The antenna has been operated at a frequency as high as 15.5 GHz with a loss of 3.2 db attributable to the reflector tolerance. At 7.75 GHz this reflector tolerance loss is only 0.5 db.

Paraboloid reflectors from 210 to 250 ft in diameter are also in existence. One of the first of the large antennas was the 250-ft-diameter reflector at Jodrell Bank in England. Its surface tolerance does not permit operation much above 1 or 2 GHz. An interesting example of a large antenna is the 210-ft-diameter paraboloid built for the Australian National Radio Astronomy Observatory at Parkes, N.S.W. and operated by the Commonwealth Scientific and Industrial Research Organization (C.S.I.R.O.) (14). It was constructed with a number of design compromises to make it economically affordable by astronomers on a limited budget. To minimize cost, the coverage of the antenna was restricted to angles greater than 30 degrees above the horizon, the surface distortions were measured relative to the paraboloid which best fitted the surface at any time (a common practice with large paraboloid antennas), the antenna was not required to operate in high winds, and advantage was taken of the fact that a site could be found in Australia, which was free from ice and snow.

Paraboloid reflectors with diameters of 400 ft or more have been considered (15). Because of the nonlinear increase in cost with increasing size, it is not likely that paraboloids of a size significantly larger than 400 to 500 ft diameter will be constructed. Simple analysis (16) indicates that the cost of this form of antenna should vary as $v^{2/3} f_{max}^{1/3} d^{8/3}$, where v is the maximum wind velocity the antenna must withstand, f_{max} is the maximum frequency of operation, and d is the antenna diameter. The almost cubic variation of cost with diameter makes very large paraboloid antennas economically prohibitive.

The usual form of paraboloid reflector is fed from a horn or other suitable low-gain radiator located at the focus. This feed arrangement is often satisfactory for many applications, but with large antennas proper mechanical support can be a problem if sag of the feed is not to introduce an uncontrolled shift in the direction of the radiated beam. Also, the relatively long length of transmission line to the feed means added attenuation of the power available for transmission, as well as both attenuation and increased noise temperature when operating as a receiving antenna. The Cassegrain antenna configuration mitigates to a large extent the above-mentioned disadvantages of a focal-point feed paraboloid. The long lengths of transmission line to the feed are eliminated, as are the losses attendant with long lines. The Cassegrain antenna also has other advantages.

The transmitter, receiver, and any special rf equipment that might be required can be conveniently housed behind the antenna close to the feed. Furthermore, the relative ease with which different equipments can be installed and removed offers versatility for research applications. The Cassegrain antenna also results in less spillover energy illuminating the relatively hot ground, so its noise temperature can be lower than that of a conventional focus-fed paraboloid.

Reflectors with Reduced Volumetric Coverage

Steerable reflector antennas capable of hemispherical coverage become increasingly more uneconomical with increasing size. One compromise that can be employed to realize a large antenna is to sacrifice the full hemispherical coverage for something less.

At the National Radio Astronomy Observatory in Green Bank, West Virginia, an economical 300-ft-diameter paraboloid reflector was constructed by limiting the steering of the antenna to the elevation coordinate only (3). This is permissible in radio-astronomy applications, since the rotation of the earth provides the orthogonal coordinate. A one-dimensional angle-scan in which the earth's rotation supplies the other angle coordinate is called a transit mount.

Another example of a large antenna is the FIAN cross-type radio telescope employed by the Lebedev Physics Institute of the USSR (17). This antenna consists of two parabolic cylinder antennas each 40 by 1000 meters. One parabolic cylinder is situated in an east-west direction and can be mechanically positioned in elevation by rotating the antenna about the cylinder axis. The second parabolic cylinder is situated in the north-south direction and is fixed. Its beam is scanned electronically by means of phase shifters. The antenna is designed to operate over the frequency range 30 to 120 MHz. At a frequency of 100 MHz the beamwidth is estimated to be about one-sixth of a degree.

Fixed Reflector and Steerable Feeds

If the reflector is sufficiently large, movement of the entire structure is almost out of the question. When such is the case, the beam of a fixed reflector can be steered by moving the position of the feed. The beam of a paraboloid reflector can be steered a few beamwidths off axis before excessive deterioration occurs in the antenna by moving the feed from the focus. A stepped parabolic reflector can also be used to scan a beam by positioning the feed. The stepped reflector can scan to wider angles than can the continuous paraboloid.

If the reflector surface is made spherical rather than parabolic, it is possible to scan the beam to a greater angle. The aberration that results from a spherical reflector can be corrected by a properly designed line feed. The 1000-ft-diameter spherical reflector at Arecibo, Puerto Rico is an example (3). Since the antenna is used for astronomy, the beam is directed towards the zenith and the reflector can be carved out of the ground. Scanning of the beam is accomplished with an overhead movable feed capable of positioning the 1/6-degree beamwidth (at uhf) 20 degrees from the zenith.

In the Arecibo spherical reflector the entire aperture is illuminated. The spherical reflector may also be utilized in a different manner to achieve wide scan angles by illuminating only that portion of the spherical reflector which approximates a paraboloid. The beam may be continuously scanned by moving the feed so that it illuminates another portion of the spherical surface. This is called a spherical torus. When scanning in only one dimension is required, the cross section in one plane of the antenna can be parabolic (or elliptic) and that of the other plane circular. This is known as a parabolic torus. An example is the BMEWS surveillance radar, which employs a fixed parabolic torus

reflector 160 ft high by 400 ft long and utilizes an organ-pipe scanner to scan the beam. In the torus antenna the maximum scan angle is limited by self-blocking to approximately 120 degrees.

Still another example of a large fixed antenna whose beam is steered in angle by scanning of the feed is the parabolic cylinder. The University of Illinois operates for radio astronomy a 400 by 600 ft parabolic cylinder lying on its back (3). At 600 MHz the beam is 1/3 degree. The beam is steered by electronically controlling the relative phase at the linear array feed. The rotation of the earth provides scanning in the other coordinate.

Large antennas for radio astronomy such as that at Arecibo and the University of Illinois can be built economically by carving them out of the ground with earth-moving equipment and covering the shaped surface with a suitable reflector material. Since the accuracy that can be expected of earth-moving equipment might be of the order of one inch, this technique has not been used to construct antennas at the higher microwave frequencies much above 1 or 2 GHz. One of the first examples of an antenna scooped out of the earth with road-building machinery is the 263 by 220 ft paraboloid located at Stump Neck, Md. This was installed in 1951 and was used for probing the surface of the moon with radar by NRL.

Lens Antennas

The various forms of lenses have interesting properties for antenna applications, but they are generally limited in physical size as compared to reflector antennas and have not had significant application in large sizes. A lens, by its very nature, is more difficult to support mechanically than a reflector. The entire back of the reflector can be utilized for support structure, but only the periphery of the lens can usually be employed for mechanical support.

Traveling-Wave Antennas

With the exception of the long wire antenna and the rhombic antenna which are used at the lower communication frequencies, there has been little application of the traveling-wave antenna to large sizes.

Array Antennas

There are no fundamental limits to the size of an array antenna, but economic considerations often limit the number of elements that can be employed. For purposes of the present discussion it is assumed that a reasonable economic upper limit to the size of a planar array might be approximately 10,000 elements. If the elements are located on a rectangular grid with half-wavelength spacing, the aperture would be 50 wavelengths square and the beamwidth about one degree. This is a highly directive antenna by many standards, but it is of considerably less directivity than many of the reflectors discussed previously. To decrease the beamwidth to 1/3 degree requires an order of magnitude more elements. Because of the limit to the number of elements, physically large array antennas will generally be found only at the lower frequencies (uhf or less).

The radio astronomer has widely employed the array antenna at the lower frequencies to achieve large antenna apertures. An interesting example is the Jicamarca Radar Observatory near Lima, Peru, operated by the National Bureau of Standards and the Instituto Geofisico del Peru (18). This is an array of 18,432 dipoles arranged in a square aperture 290 by 290 meters with half-wavelength spacing between elements. Its nominal

frequency of operation is 50 MHz and it has a beamwidth of 1.1 degrees. The dipoles are arranged in two separate superimposed arrays. The two sets of 9,216 dipoles each are at right angles to provide orthogonal polarizations.

A rather long linear array is that of the NRL Lake Kickapoo Space Surveillance Radar Station, which went into operation in 1966. This two-mile-long array consists of 2592 dipole elements spaced half-wavelengths apart at a frequency of 216 MHz. The dipole elements are bent in the shape of an arrowhead with a 70-degree included angle so as to widen the E-plane pattern. The H-plane pattern has a beamwidth of approximately 0.025 degree.

Perhaps the largest array antennas in terms of physical dimensions are those for the seismic detection and location of earthquakes and underground explosions. Although these are not electromagnetic devices, many of the design techniques developed for electromagnetic antennas can be applied with modification to seismic arrays. The same is true for acoustic arrays. The Large Aperture Seismic Array (LASA) consists of 525 seismometers buried in 200-ft-deep holes and is arranged in 21 subarrays over an aperture of 200 km (19). The elements are connected with 500 miles of open-wire telephone line and 275 miles of microwave link. Since seismic waves can propagate with different velocities, depending on the mode and the path, an array of seismometers can be designed as a velocity filter as well as a spatial filter to sort out the desired signals. Seismic arrays must be large because of the very long wavelengths of seismic waves.

Arrays of Antennas

When the practical limit to the size of a single antenna has been reached, the gain and the effective area can be doubled simply by utilizing two such antennas and combining the outputs without loss. Further increase in antenna aperture can be obtained by combining additional antennas. Although the above assumed the largest possible antenna size as the basic element, smaller antennas can be used and still provide a total effective aperture more economical than a single large aperture.

The many large directive antennas combined as in an array relaxes the mechanical requirements of the individual antenna surfaces, since the surface tolerance must be maintained over the smaller area of each aperture rather than over one large aperture. Not only is it mechanically easier to point the many individual antennas than a single one of equivalent total area, but also the pointing requirements may be further relaxed because of the wider beamwidth of the individual antennas. This advantage, however, is compensated in part by the more stringent requirements on the phase accuracy with which the outputs of the individual antennas must be connected. The economic advantage of the simple arraying of many individual antennas results from the fact that the cost of a parabolic reflector antenna is approximately proportional to the 8/3 power of the diameter. Doubling the diameter increases the area by a factor of four, but the cost is increased by a factor of 6.4. Thus, in principle, four antennas each of diameter d will be about 60 percent as costly as a single antenna of diameter $2d$.

The individual antennas cannot be spaced too closely together if they are to be mechanically steered without physically interfering with one another or without causing aperture blocking at low angles of elevation. Thus the spacing will probably be large enough to result in a radiation pattern with grating lobes. (These are not of concern in many receiving applications as well as in some transmitting applications.) Grating lobes can be suppressed by unequal spacing between apertures or by nonlinear processing.

The arraying of moderate or large size antennas is a common procedure in radio astronomy for economically achieving good angular resolution. In radio astronomy, these arrays are usually called interferometers. Radio astronomy interferometer arrays are often employed with nonlinear processing to improve the resolution.

As the array of individual antennas grows in extent, the problem of achieving phase coherence among the subapertures becomes increasingly difficult. Phase coherence is necessary for the efficient combining of signals, and lack of coherence results in effects similar to phase errors in a conventional array. Phase incoherence can result from the propagation medium not being uniform over the physical extent of the aperture. Incoherence can also be caused by temperature differences along the transmission lines connecting the antennas. Another source is the mechanical motion of the transmission lines, which can alter their electrical length.

In some applications it may be possible to compensate for the effects of phase incoherence by operating the array of antennas as an adaptive antenna (20). An adaptive antenna is one composed of individual receiving antennas or subapertures, in which the phase of the signal at each subaperture is measured and a phase correction applied so that the signals may be added coherently (Fig. 1). The phase measurement at each subaperture must be made relative to a common reference signal. In the actual implementation of a practical adaptive antenna, the phase measurement need not be made explicitly.

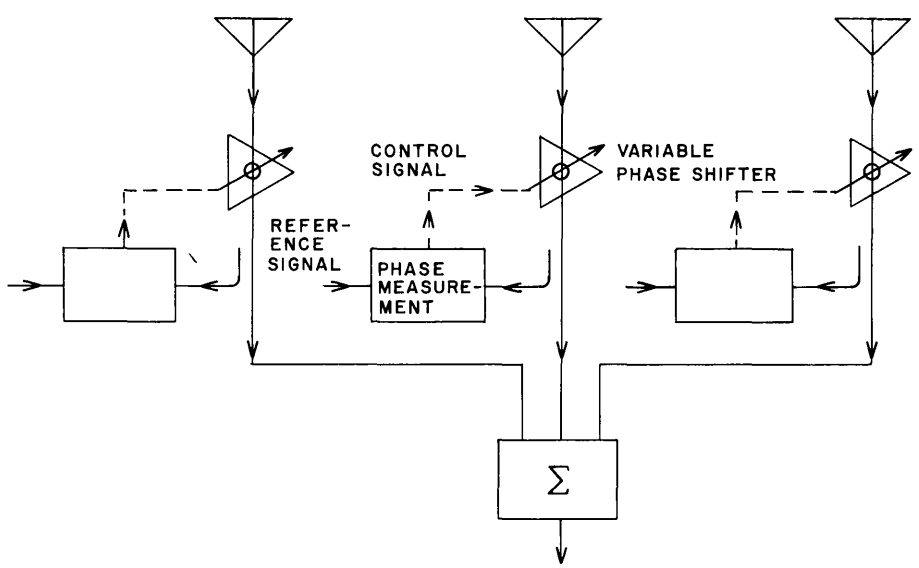

Fig. 1 - An adaptive antenna utilizing variable phase shifters and a common reference signal. A phase-locked loop with voltage-controlled oscillator and mixer can be substituted for the phase shifter.

The measurement of the relative phase of the received signal at each subaperture requires an adequate signal-to-noise ratio in order to achieve an accuracy sufficient to permit coherent combining. A 20-db signal-to-noise ratio, for example, results in an rms phase error of about 0.1 radian. If such a relatively large signal-to-noise ratio were available at an individual antenna element, there would be little need for additional antenna elements, in most cases. A signal-to-noise ratio of this magnitude would satisfy the requirements of many applications, and an adaptive antenna would be of little value. However, in certain communication applications a carrier signal, or its equivalent, can be isolated by means of a narrow-band filter to obtain the high signal-to-noise ratio necessary for the phase measurement of an adaptive system. The information-bearing, wideband modulation accompanying the carrier is of lower signal-to-noise ratio because of its wider bandwidth, assuming equal power in the pilot and the modulation channels.

The phase correction needed to combine the carrier signals coherently can be applied to the coherent combining of the wideband modulation. Since a phase correction is basically applicable at but a single frequency, the bandwidth of the modulation must not be so wide that the phase correction applicable at one part of the band may not be applicable at some other part of the band. If the band is too wide for a single phase correction to apply, it may be subdivided into smaller bands each with its own subcarrier with which to perform the phase measurement. The adaptive antenna diagrammed in Fig. 1 is meant to illustrate the principle involved rather than to indicate an actual application. In practice either the phase-lock loop or the feedback phase shifter can be employed to carry out the indicated functions.

Although it is not usually considered as such, the ordinary monopulse radar tracking antenna is an example of an adaptive antenna. The four feeds used in monopulse to obtain the angular error signals correspond to the subapertures. A relative phase measurement is made between each of the four feeds, or subapertures, and the entire antenna is positioned from the information derived. This antenna adapts to an "error" in the incident phase front so as to make the phases received at each element equal. This adaptive antenna is for a purpose other than increasing the total effective antenna aperture, the case of interest in this section.

The description of the adaptive antenna was in terms of a receiving application. Once the phase measurement of the received signals is performed and the necessary corrections made at each subaperture, the antenna can be used as a transmitter as well as a receiver, since the signals radiated from each subaperture will arrive coherently at the original source of the radiation. An array of subapertures used in this manner for two-way operation is sometimes called a self-phasing antenna, or a retrodirective antenna.

Multiple Flat Plates (Multiple Antenna)

An unusual antenna can be built with a number of independent, flat, reflecting plates individually oriented and positioned to add coherently at a common point (the focus), the energy reflected from a particular direction. The beam formed by this antenna is steered by mechanically orienting the individual plates.

As mentioned previously, there is a practical limit to the accuracy with which a single reflector antenna can be constructed. With a practical single reflector, the economical limit to the mechanical accuracy seems to be slightly better than one part in 10^4. Assuming the maximum error that can be tolerated is 0.1 wavelength, an accuracy of one part in 10^4 corresponds to a beamwidth of about 0.05 degree. In the multiplate antenna this limitation is overcome by placing the individual antenna elements (the flat plates) close to the ground and depending on the rigidity of the earth to ensure the required dimensional stability across the large aperture. Thus the accuracy requirement is placed on the relative adjustment of the elements and not on the elements themselves. The same was true of the array of antennas discussed previously, but in that case the relative adjustments were mainly electrical rather than mechanical, as in the multiplate antenna. The relative adjustment of the individual elements of the multiplate antenna may be performed by geodetic methods. An accuracy of one part in 10^6 is claimed (21).

For applications not requiring full hemisphere coverage, the multiplate antenna provides a good technique for constructing very large apertures. Its cost per unit area is low, and the instructions required for positioning the individual elements are simple and can be computer controlled. By adjusting the plates, the focus of the beam can be changed or the beam shape controlled. The multiplate antenna is fed by conventional means from the focus of the aperture.

The multiplate principle was first applied at the Pulkovo Observatory of the University of Leningrad, USSR, to a large radio astronomy telescope (21). The Pulkovo antenna is also known as a variable profile antenna. The reflecting surface consists of 90 rectangular flat elements arranged around an arc of 100 meters radius (Fig. 2). Each plate is 1.5 by 3 meters. The arc length is 140 meters, and the central angle is about 80 degrees. The plates form part of an imaginary paraboloid. At a wavelength of 3.2 cm a fan beam is formed about one minute of arc in azimuth and one degree in elevation. The area of the Pulkovo antenna is about 400 square meters, but it has been stated that the variable profile principle allows the construction of a microwave antenna with an area of about 20,000 square meters. At longer wavelengths, from 20 cm to 2 meters, it is claimed to be possible to construct an antenna with area of 100,000 square meters.

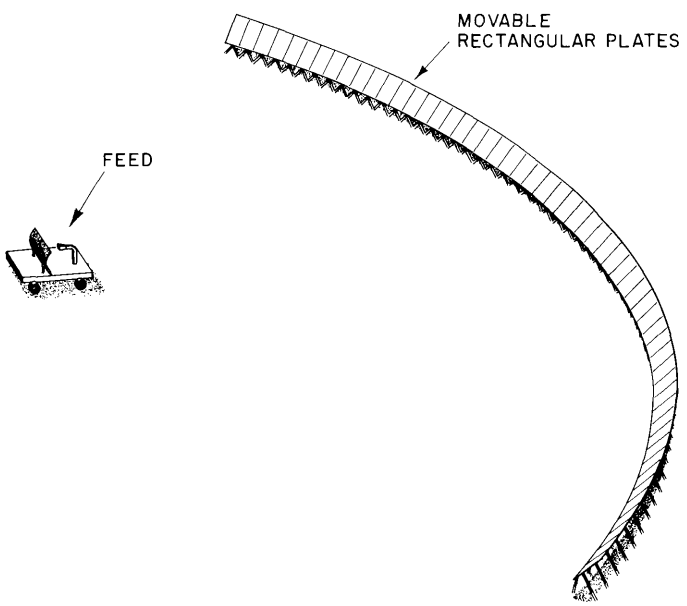

Fig. 2 - The Pulkovo variable-profile antenna

Another approach to the multiplate antenna is to mount the feed on a high tower. The beams generated are not limited to fan shapes, as is the Pulkovo variable profile antenna. A flat antenna is not as broadband as one whose plates lie on a parabolic contour, because of the transit-time differences between portions of the antenna.

TIME-SHARED APERTURE

The discussion of large antennas thus far has been concerned with physically large structures. It is possible, under certain circumstances, to achieve the equivalent of a very large aperture by utilizing a single antenna of modest size. This antenna is positioned sequentially (time shared) over a much larger area, so as to synthesize the pattern of the antenna that would occupy the much larger area. The large physical antenna aperture is traded for time. Time sharing of a receiving aperture is possible if the source of radiation is unchanged over the time taken to sample the aperture sequentially. This condition is often met in radio astronomy.

Although the radiation from a radio star may be noise-like when observed over a short time, its basic character does not usually change from day to day or from month to month. The stationarity of astronomical sources is the basis by which the radio astronomer can synthesize the effect of a large antenna by time-sharing a much smaller one. This is accomplished by sequentially positioning a single antenna throughout the entire aperture area, storing the received signals, and (after sampling the entire area) combining the signals to produce a radiation pattern like that of an antenna occupying the entire aperture. At each sampled point only the phase and amplitude need be measured and stored. In practice, the phase of the signal at the output of the sampling antenna is measured relative to that of a similar antenna fixed in location. The reconstruction of the image from the data is accomplished with a digital computer. The patient radio astronomer might take weeks or months to map the sky with this technique. Achieving the effect of a large aperture by time sharing a smaller one has been called aperture synthesis by the radio astronomer (22).

The same basic principle has also been applied by the radar engineer to the precision mapping of the ground from an airborne, side-looking radar. In this application it has been called synthetic aperture (23). An important difference between the two is that the radar usually performs its sampling of the total aperture over much shorter times than does the radio-astronomy antenna. Another difference is that the radar application involves transmission and reception, while the radio astronomer's antennas operate on receive only.

Aperture Synthesis

Figure 3 shows a rectangular aperture divided into a large number of subapertures. If the original aperture is considered as a receiving antenna of MN subapertures whose outputs are summed as in an array, the output of the antenna can be written:

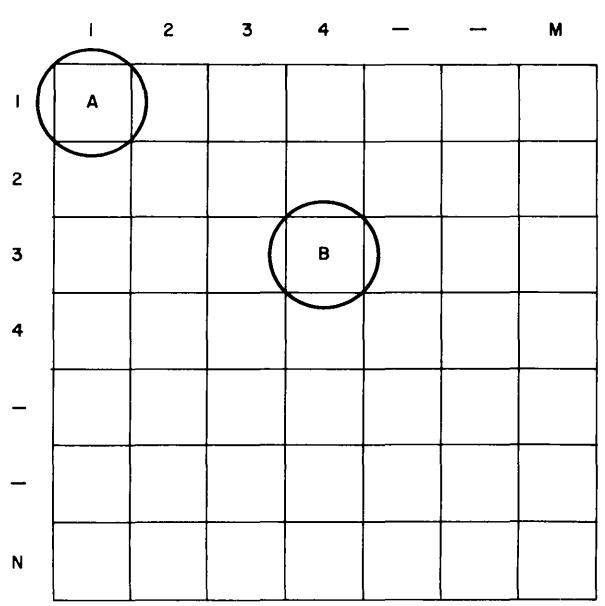

Fig. 3 - Rectangular antenna aperture divided into a large number of subapertures. The fixed reference antenna is at A, the sampling antenna at B.

$$E(\theta, \varphi, t) = \sum_{m=1}^{M} \sum_{n=1}^{N} a_{m,n} \cos(\omega t + \Psi_{m,n}) \tag{8}$$

where $a_{m,n}$ is the amplitude of the signal at the mnth subaperture, $\Psi_{m,n}$ is the phase of the signal at the mnth subaperture, and ω is the angular frequency of the received signal. The antenna output is not only a function of time but also of the angular coordinates θ, φ because the phases $\Psi_{m,n}$ are functions of the angular direction of the signal. The field-intensity pattern is the amplitude of Eq. (8) or

$$E(\theta, \varphi) = \left[\left(\sum_m \sum_n a_{m,n} \cos \Psi_{m,n}\right)^2 + \left(\sum \sum a_{m,n} \sin \Psi_{m,n}\right)^2\right]^{1/2} \tag{9}$$

If the amplitudes $a_{m,n}$ and the phases $\psi_{m,n}$ at each subaperture are independent of time, the field-intensity pattern may be determined by a single subaperture performing the necessary amplitude and phase measurements at each of the mn positions. The amplitude measurement can be made with a conventional envelope detector. A phase measurement involves comparing the unknown signal with a reference signal of the same frequency in a nonlinear device. To measure phase, therefore, the frequency of the signal must be known, or a replica of the received signal must be available. The phase of the reference signal must not drift during the time of measurement.

Although the observation time might be short enough in radar ground mapping to permit the use of a stable source as the phase reference, the radio astronomer utilizes observation times, often measured in weeks or months, which are far too long a duration to expect to maintain the phase stability of practical signal oscillators. Instead, the radio astronomer measures the relative phase between two subapertures, as between A and B in Fig. 3. One of the subapertures remains fixed and acts as the reference for the phase measurement. The other is positioned sequentially to sample the antenna aperture to be synthesized. The two subapertures can be considered as two elements of an interferometer whose outputs are multiplied in a nonlinear device to give a voltage E_i

$$E_i = a_{m,n} a_{1,1} \cos(\psi_{m,n} - \psi_{1,1}) . \tag{10}$$

The source is far enough away from the antenna so that the amplitudes $a_{m,n}$ are all assumed equal to one another. Hence, the interferometer output is a measure of the phase of the signal at the mnth location relative to the phase of the signal at the fixed, reference location.

The synthesized radiation pattern is constructed from the collection of relative phase measurements by vectorially adding the contributions from each location, as indicated in Eq. (9). Amplitude weighting can be applied to each measurement before summation to produce a synthesized radiation pattern with lower sidelobes than if equal-amplitude weighting were employed. Adding of the components without adjustments of the phase synthesizes a beam directed broadside (perpendicular) to the aperture. By making adjustments to the phase measurements, just as in steering the beam of a conventional phased array, an antenna beam can be synthesized in a direction other than perpendicular. Proceeding in this manner, the data can be processed to produce the same effect as if a beam from the large antenna were scanned to map an angular region corresponding to the coverage afforded by the beam of the sampling subaperture but with a resolution determined by the large aperture. Thus a radio map of the sky encompassing the coverage of the sampling subaperture can be obtained from a single set of sequential measurements. The processing of the data is generally carried out by a computer which utilizes the measured values of phase and amplitude obtained at each location, along with any amplitude weighting and phase-steering instructions inserted into the computer program by the antenna designer.

The total observation time required to map the region of the sky encompassed by the beamwidth of the sampling subaperture can be the same for both the time-shared antenna and a conventional antenna occupying the total area, provided it is assumed that observations are not limited by signal-to-noise ratio. To show this, assume a square subaperture of dimension d sequentially sampling a larger square aperture of dimension D. If the time spent at each position is τ, the total time to cover the entire aperture sequentially is approximately $(D/d)^2\tau$. If the entire aperture area were used simultaneously as a conventional antenna, the main beam of the radiation pattern would encompass $(\lambda/D)^2$ steradians, where λ is the wavelength. Scanning the solid coverage $(\lambda/d)^2$ with this beam, and dwelling a time τ at each angular resolution cell, results in a total time of $(D/d)^2\tau$, the same as with the time-shared antenna sequentially sampling the entire area. The equal scan times as derived from the preceding argument applies to any angular region, so long as it is not less than the angular volume $(\lambda/d)^2$ of the individual sampling subaperture.

The demonstration of equal mapping times with the conventional antenna and the time-shared antenna assumed that the observation time τ at each position of the time-shared antenna was the same as the observation time at each beam position of the conventional antenna. Equal observation times, however, result in a large difference in signal-to-noise ratio in the two cases. The signal-to-noise ratio at the sampling subaperture is but $(d/D)^2$ that of the large aperture antenna. If the rf signals were stored and added coherently (predetection combining), the sensitivity of the time-shared array would be the same as its large-aperture equivalent. However, because of the long total observation time required by the radio astronomer to map the sky, coherent addition is not practical. The combining of signals from phase measurements made with reduced signal-to-noise ratio results in a degradation of signal-to-noise ratio as compared with that of the large-aperture antenna. The combining is equivalent to postdetection, or incoherent, addition. The signal-to-noise ratio of the time-shared synthesized antenna is reduced from that of the large antenna by a factor approximately equal to the square root of the ratio of the subaperture area to the total area. In the case of the rectangular aperture, this factor is d/D. Thus, the effective receiving area, or collecting area, of a synthesized-aperture antenna is less than that of the resolving area. Sensitivity is sacrificed but not resolution, if the beamwidth is taken as the measure of resolution. In many applications, especially in radio astronomy, resolution is more important than sensitivity, so that this technique is attractive. It should be cautioned, however, that the theoretical resolution capability of the synthesized antenna is not as good as that of the large-aperture antenna if the signal-to-noise ratios are not the same. In theory, resolution is a function of the signal-to-noise ratio as well as the antenna beamwidth. This fact has not always been taken into account in the past when evaluating the resolution capabilities of competing antenna systems whose signal-to-noise ratios are different.

Instead of using two antennas to sequentially search out a two-dimensional aperture, as was shown in Fig. 3, an extended linear antenna and a smaller antenna can be used, as in Fig. 4, to synthesize an aperture by positioning the smaller antenna in one dimension. The smaller aperture B is moved along a line perpendicular to the fixed linear aperture A. The number of observations required to synthesize the aperture is smaller than when the antennas have to be positioned within the entire two-dimensional area, but the amount of sky mapped is correspondingly reduced. One-dimensional synthesis is useful when it may be convenient to map a small region of the sky in a short time rather than to wait a longer time and obtain results over a wider area. A larger area of the sky can be mapped with the one-dimensional aperture synthesis if the beam of the linear array is scanned rather than remain fixed.

The one-dimensional synthesis of Fig. 4 has been applied at the Cavendish Laboratory, England to a 38-MHz radio telescope in which the fixed element is a corner reflector antenna 3300 ft long and 40 ft wide arranged in an east-west direction (22). The movable element is of similar construction and is 100 ft in length and traverses a north-south direction. The synthesized beam is of width 0.8 degree.

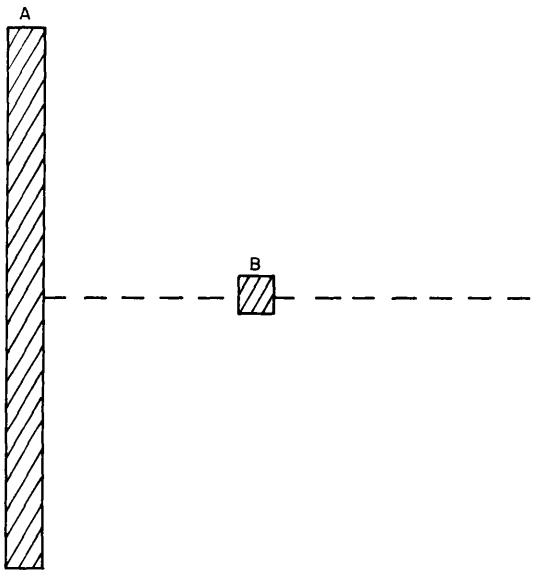

Fig. 4 - One-dimensional aperture synthesis using fixed linear aperture (A) and sampling subaperture (B) sequentially positioned along the line perpendicular to linear aperture

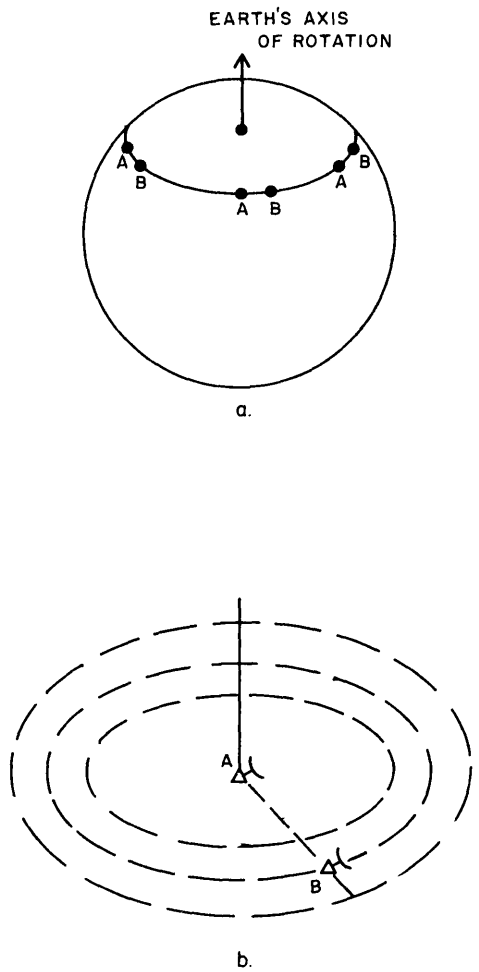

Fig. 5 - Aperture synthesis using the change in earth's rotation to achieve the effect of a planar aperture; (a) two elements separated in longitude, showing change in relative position, and (b) ellipses traced out by two antennas with varying separation

Other arrangements for synthesizing an aperture are possible. An interesting variation utilizes the earth's rotation to synthesize a two-dimensional aperture. Two elements separated in longitude, as in Fig. 5, will appear to rotate with respect to one another as the earth rotates. If the two elements are directed to the same point in the sky, the relative motion at a fixed separation is that of a circle or ellipse. As the elements are separated from one another they trace out circles or ellipses of larger diameter and thus synthesize a planar aperture, as in Fig. 5b. The aperture is parallel to the equatorial plane when the beams point in the direction of the celestial pole. For other beam directions the synthetic aperture is an ellipse of lesser area.

The synthesis of a large aperture by time sharing has the advantage of economy, but the limits to large apertures, as discussed in a previous section, are not necessarily eliminated. However, the processing of the data in a computer offers the advantage of flexibility, since various aperture weightings in both amplitude and phase can be accommodated if desired. An obvious limitation of the method is that it requires the source under observation to remain unchanged during the time of measurement. This limitation is not of general concern to the radio astronomer, except for solar observations. When

only a small portion of the sky is to be observed, aperture synthesis loses some of its attractiveness, since one of its attributes is that the mapping of a large region of the sky is possible by proper processing of a single set of observations.

Although the effective resolving area of the synthesized aperture is greater than the effective collecting area, it should be cautioned that this statement assumes the beamwidth is the sole measure of resolution capability. There is theoretical justification for considering the angular-resolution capability of an antenna to be related not only to the beamwidth but to the signal-to-noise ratio as well. With this interpretation of resolution, the resolving area and the collecting area are the same.

The discussion of aperture synthesis has been in terms of a receive-only antenna, since this arrangement is of most interest to the radio astronomers who have been active in advancing this antenna technique. It can also be applied to antennas which both transmit and receive, as in ground-mapping radar.

Synthetic Aperture

The time-shared radar antenna applied to ground mapping from an aircraft or satellite has been called a synthetic aperture or synthetic array (23). It is based on the same principle as the synthesized radio-astronomy aperture. There are significant differences in implementation, however, resulting from the difference in application. Since the time of observation is generally short enough to permit a separate coherent reference signal for the phase measurement, the radar synthetic array uses a single sampling aperture rather than two apertures, as in the radio-astronomy application. It is also possible to store the signals in a memory device and not perform phase measurements directly.

Consider an aircraft with a radar whose antenna beam is directed perpendicular to the line of travel (Fig. 6). As the aircraft flies along its course, the amplitude and phase of the signal returned from each pulse is measured and stored. The location of the radar antenna when each pulse is transmitted and received may be likened to the location of an element in an array antenna. The distance between "elements" of the synthetic array is equal to v/f_r, where v is the velocity of the aircraft and f_r is the pulse repetition frequency. The total length of the synthetic array is equal to vT where T is the time a point-target on the ground is within the view of the radar antenna beam θ_a. Note that since T increases with increasing range, the effective length of the synthetic array aperture is a function of the range R. After the proper number of sampled signals is obtained, they are summed to reconstruct the antenna pattern. Since the number of samples, or elements, to be summed depends on the range, the summation must be performed separately for each range of interest. As with the aperture synthesis employed by the radio astronomer, amplitude weighting and phase changes can be introduced in the processing to achieve lower sidelobes, the effect of a steered beam, a focused antenna, or other special effects.

It is not necessary in most applications of the radar-mapping synthetic array to make an actual phase and amplitude measurement at each sampled point, as done by the radio astronomer. The time of observation is usually short enough to permit converting of the received signal to an intermediate frequency and storing in some memory device before summation. The data-processor portion of the synthetic array is an important part of the system. The heart of the data processor is the memory, or storage, device, which may be an acoustic delay line, electrostatic storage tube, resonant filters, photographic film, magnetic drums, or tape. Both optical and electronic processing have been employed. The data processor must also apply the desired phase and amplitude weights to the received signals and introduce whatever corrections might be necessary to account for the aircraft ground speed, as well as any deviations from linear flight.

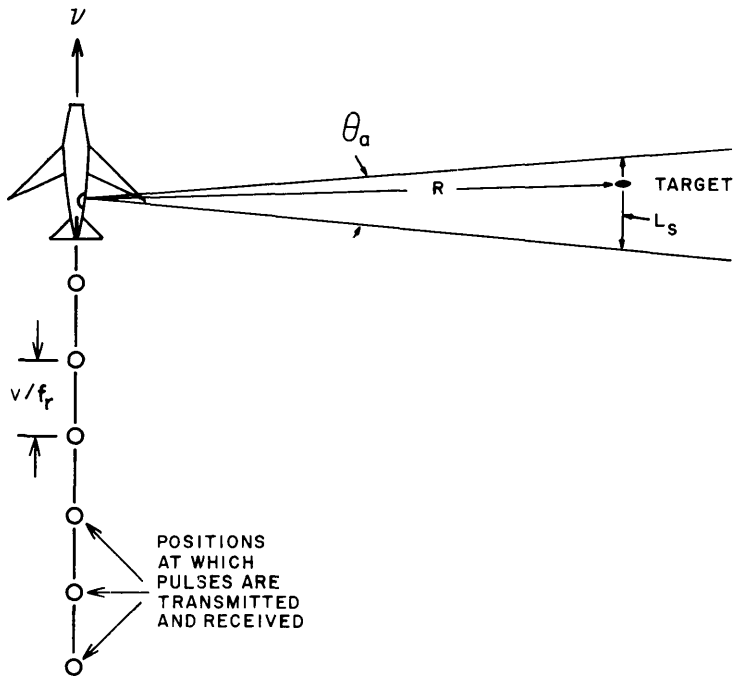

Fig. 6 - Geometry of the side-looking synthetic array

The synthetic array permits angular resolution with an airborne antenna far better than can be obtained from a physical antenna located on board the aircraft. Synthetic arrays using on-board physical antennas of only 10 ft in length are able to attain a resolution equivalent to that of an aperture over 1000 ft wide (24). This technique is important, since it permits the angular resolution of an airborne radar to be comparable to the range resolution obtained with wide-bandwidth pulse-compression waveforms. The side-looking synthetic array may be directed to an angle off broadside if desired by tilting the beam of the on-board antenna and inserting the proper phase shifts into each sampled value of phase before summation.

Errors caused by atmospheric inhomogeneities, vehicle motion, and equipment instabilities have an effect on the gain and sidelobes of the synthetic array pattern similar to phase and amplitude errors in conventional array antennas. The flexibility inherent in the data processing permits errors due to vehicle motions to be corrected by using accelerometers to sense deviations from a straight-line flight path. When the synthetic array length is so large that the target to be mapped lies within the Fresnel region of the synthesized aperture, the synthetic array can be focused if the necessary phase corrections are applied to the stored signals to account for the spherical wavefront. The data processor can adjust the focus as a function of range. The operation of the synthetic array depends on the motion of the vehicle carrying the antenna. This motion must be known and properly accounted for in the processor. If the target is in motion (such as a train or other ground vehicle), an error will result. A uniform target motion causes a shift in the apparent location of the target.

As with any array antenna, sampled points too far apart can permit grating lobes to appear. In general, this situation is to be avoided. To avoid grating lobes, the pulse-repetition frequency cannot be too low and the aircraft speed cannot be too high.

The radiation pattern of a uniformly excited synthetic-array antenna of length is in shape similar to that of the equivalent linear array of the same length, but is of one-half the beamwidth. This is a consequence of the two-way propagation path of the synthetic array. In the conventional array antenna, all the elements radiate simultaneously and receive simultaneously. Each receives energy from the target originally radiated from all the elements. On the other hand, each "element" of the synthetic array receives from the target only the energy transmitted by itself. This difference not only results in a difference in the radiation patterns, but it also is the reason why the total signal-to-noise ratio of the synthetic array is less than that of the conventional array for the same total time of observation.

The ultimate resolution of a synthetic array is determined by the physical size of the antenna aperture carried on board the aircraft. For present purposes, two targets are said to be resolved in angle if they are separated by one antenna beamwidth. (This definition is a common one and does not include the signal-to-noise ratio.) The beamwidth of the synthetic array of length $L_s = vT$ is

$$\theta_s = \frac{\lambda}{2L_s} . \tag{11}$$

The factor of 1/2 is included for the reason given in the preceding paragraph. The maximum length L_s is determined by the observation time, which in turn depends upon the beamwidth of the physical antenna on board the vehicle. If the length of this on-board antenna aperture is d, its beamwidth is approximately λ/d. The length L_s is equal to $(\lambda/d)R$, where R is the range to the target (Fig. 6). Then

$$\theta_s = \frac{d}{2R} . \tag{12}$$

The distance x_r that can just be resolved at a range R by an antenna of beamwidth θ_s, by the simple criterion of resolution, is

$$x_r = \theta_s R = \frac{d}{2} . \tag{13}$$

Hence the limit to the separation of two targets that can be just resolved is half the length of the physical aperture of the sampling antenna on board the vehicle. Good resolution requires that the aperture be small. However, the antenna aperture cannot be too small without sacrificing signal-to-noise ratio, which is an important consideration for good resolution. From Eq. (13), the ultimate resolution of the synthetic array is independent of the range and the wavelength. In the Fresnel region this resolution is also obtained provided the synthetic aperture is focused.

The synthetic array antenna was first conceived not as a time-shared aperture, as described in this section, but as a doppler frequency-processing technique for improving angular resolution by filtering. The doppler frequency shift from a point P_1 is

$$f_1 = \frac{2v}{c} f_0 \cos \theta_1 \tag{14}$$

where c is the velocity of propagation, f_0 is the carrier frequency, and θ_1 is the angle to the point P_1 measured with respect to the aircraft velocity vector. A second nearby point, P_2, produces a doppler frequency of the same form as Eq. (14), but with angle θ_2 substituted into the equation instead of θ_1. The difference in the doppler frequencies from the two nearby points is approximately

$$\Delta f = \left(\frac{2v}{c}\right) f_0 \ (\sin \theta) \Delta\theta \tag{15}$$

where $\theta = (\theta_1 + \theta_2)/2$ and $\Delta\theta = \theta_1 - \theta_2$. To separate the returns from the two points requires a filter of bandwidth less than Δf. The observation time T must be greater than $1/\Delta f$ to achieve this resolution. The analysis of the resolution capabilities using the frequency domain and the doppler shifts is equivalent to the analysis of the resolution assuming a time-shared synthetic aperture.

The advantage of the time-shared antenna for synthesizing a large aperture, whether for radio astronomy or for radar ground mapping, is primarily economic rather than to overcome the usual limitations of large aperture antennas. The airborne synthetic aperture achieves a resolution not practical with the usual antennas that can be made to fit on board airborne vehicles unless one were willing to fly an antenna many times the length of the aircraft. Its advantage in radio astronomy is that it achieves the resolving capabilities of much larger antennas by trading antenna cost for time of observation and processing.

REFERENCES

1. Friis, H.T., and Feldman, C.B., "A Multiple Unit Steerable Antenna for Short-Wave Reception," Bell Sys. Tech. J., 16:337-419 (July 1937)

2. Wheeler, H.A., "Fundamental Relations in the Design of a VLF Transmitting Antenna," IRE Trans. AP-6:120-122 (Jan. 1958)

3. Findlay, J.W., "Radio Telescopes," IEEE Trans. AP-12:853-864 (Dec. 1964)

4. "Large Steerable Radio Antennas - Climatological and Aerodynamic Considerations," Ann. N.Y. Acad. Sci. Vol. 116, Art. 1, June 26, 1964

5. Ruze, J., "The Effect of Aperture Errors on the Antenna Radiation Pattern," Nuevo Cimento, Supplemento, 9:364-380 (1952)

6. Judson, L.V., "Calibration of Line Standards of Length and Measuring Tapes at the National Bureau of Standards," National Bureau of Standards Monograph 15, May 20, 1960

7. Weiss, H.G., "Performance Measurements on the Haystack Antenna," pp.95-99, in "Design and Construction of Large Steerable Aerials," IEE (London) Conference Publication Number 21, IEE Conference on Large Steerable Aerials for Satellite Communication, Radio Astronomy and Radar, June 6-8, 1966

8. Ruina, J.P., and Angulo, C.M., "Antenna Resolution as Limited by Atmospheric Turbulence," IEEE Trans. AP-11:153-161 (Mar. 1963)

9. Hobart, T.D., "Navy VLF Transmitter will Radiate 1,000 KW," Electronics 25:98-101 (Dec. 1952)

10. Head, H.T., "Medium-Frequency Broadcast Antennas," Chapter 20 in Jasik, H., ed., "Antenna Engineering Handbook," McGraw-Hill Book Co., N.Y., 1961

11. Beller, W.S., "Long-Boom Antennas to Map Cosmic Noise," Technology Week 20(8):34-35 (Feb. 20, 1967)

12. Kalachov, P.D., "Some Radio Telescopes in the U.S.S.R.," Proc. Inst. of Radio Engineers Australia 24:237-242 (Feb. 1963)

13. Weiss, H.G., "The Haystack Microwave Research Facility," IEEE Spectrum 2:50-69 (Feb. 1965)

14. Bowen, E.G., and Minnett, H.C., "The Australian 210-foot Radio Telescope," Proc. Inst. of Radio Engineers Australia 24:98-105 (Feb. 1963)

15. Weiss, H.G., "Design Considerations for a Large, Fully Steerable Radio Telescope," in "Design and Construction of Large Steerable Aerials," pp. 204-207 IEE (London) Conference Publication No. 21, IEE Conference on Large Steerable Aerials for Satellite Communication, Radio Astronomy and Radar, June 6-8, 1966

16. Blacksmith, P., and Schell, A.C., "A Comparison of Three Antenna Techniques in Terms of Cost Versus Performance," in "Design and Construction of Large Steerable Aerials," pp. 135-139 IEE (London) Conference Publication No. 21, IEE Conference on Large Steerable Aerials for Satellite Communication, Radio Astronomy and Radar, June 6-8, 1966

17. Vitkevich, V.V., and Kalachev, P.D., "Design Principles of the FIAN Cross-Type Wide-Range Telescope," Radio Telescopes, Proceedings (Trudy) of the P. N. Lebedev Physics Institute, edited by D. V. Skobel'tsyn Consultants Bureau, New York, 1966

18. Bowles, K.L., Ochs, G.R., and Green, J.L., "On the Absolute Intensity of Incoherent Scatter Echoes from the Ionosphere," J. Res. (NBS) 66D:395-407 (July-August 1962)

19. Green, P.E., Jr., Frosch, R.A., and Romney, C.F., "Principles of an Experimental Large Aperture Seismic Array (LASA)," Proc. IEEE 53:1821-1833 (Dec. 1965)

20. Skolnik, M.I., and King, D.D., "Self-Phasing Array Antennas," IEEE Trans. AP-12: 142-149 (Mar. 1964)

21. Khaikin, S.E., and Kaidanovskii, N.L., "A New Radio Telescope of High Resolving Power," Paper No. 29 in the Paris Symposium on Radio Astronomy, edited by R.N. Bracewell, Stanford University Press, Stanford, Calif., pp. 166-170, 1959

22. Hewish, A., "The Realisation of Giant Radio Telescopes by Synthesis Techniques," Proc. Inst. Radio Engineers Australia 24:225-231 (Feb. 1963)

23. Cutrona, L.J., Vivian, W.E., Leith, E.N., and Hall, G.O., "A High-Resolution Radar Combat-Surveillance System," IRE Trans. MIL-5:127-131 (Apr. 1961)

24. Holahan, J., "Synthetic Aperture Radar," Space/Aeronautics, Vol. 41, pp. 88-93, Nov. 1963

This page intentionally left blank.

Security Classification

DOCUMENT CONTROL DATA - R & D

Security classification of title, body of abstract and indexing annotation must be entered when the overall report is classified)

1. ORIGINATING ACTIVITY *(Corporate author)* Naval Research Laboratory Washington, D.C. 20028	2a. REPORT SECURITY CLASSIFICATION Unclassified 2b. GROUP --

3. REPORT TITLE

LARGE ANTENNA SYSTEMS

4. DESCRIPTIVE NOTES *(Type of report and inclusive dates)*
A summary report.

5. AUTHOR(S) *(First name, middle initial, last name)*

Merrill I. Skolnik

6. REPORT DATE December 29, 1967	7a. TOTAL NO. OF PAGES 30	7b. NO. OF REFS 24
8a. CONTRACT OR GRANT NO. None b. PROJECT NO. c. d.	9a. ORIGINATOR'S REPORT NUMBER(S) NRL Report 6628 9b. OTHER REPORT NO(S) *(Any other numbers that may be assigned this report)*	

10. DISTRIBUTION STATEMENT

This document has been approved for public release and sale; its distribution is unlimited.

11. SUPPLEMENTARY NOTES	12. SPONSORING MILITARY ACTIVITY None

13. ABSTRACT

Large antennas are of importance in radar, communications, and radio astronomy applications where sensitivity and/or angular resolution are important. However, several major limitations exist to the achievement of large size antennas. Among the limitations are mechanical and environmental factors, measurement limitations, spatial bandwidth, and the effects of random errors. Mechanical factors seem to limit the tolerance achievable in present practical antennas to about one part in 10,000, more or less. This tolerance results in an antenna size of less than 400 wavelengths, corresponding to beamwidths of about 1/6 degree. Larger antennas are possible, but usually with degraded performance. Many of the limitations due to the environment can be overcome by operation inside a radome, although the radome itself will impose a limit on the antenna size.

Several common antenna types can be constructed in large sizes. The parabolic reflector in one of its many forms is the most common example of large antennas, whether movable or fixed. Array antennas with low gain elements are expensive in large sizes because of the large number of elements that they must contain. However, arraying of a modest number of large directive antennas is an attractive method for achieving large aperture and is widely employed by the radio astronomer.

(over)

DD FORM 1 NOV 65 1473 (PAGE 1)

S/N 0101-807-6801

Security Classification

Security Classification

14 KEY WORDS	LINK A ROLE	LINK A WT	LINK B ROLE	LINK B WT	LINK C ROLE	LINK C WT
Antenna systems Limitations Large antennas Reflectors						

Aperture synthesis as practiced by the radio astronomer and synthetic aperture as employed by the radar engineer are methods for achieving the effect of a large antenna by time-sharing an aperture of modest or small size. Although they are equivalent to large physical apertures in many respects, some methods of achieving time-shared apertures result in reduced signal-to-noise ratio when compared with the "equivalent" real aperture.

DD FORM 1 NOV 65 1473 (BACK)
(PAGE 2)

Security Classification