NRL Report 6613

The Plate Materials of the Lead-Acid Cell

Part 3 – Anodic Oxidation of Tetragonal PbO

JEANNE BURBANK

Electrochemistry Branch
Chemistry Division

December 29, 1967

NAVAL RESEARCH LABORATORY
Washington, D.C.

This document has been approved for public release and sale; its distribution is unlimited.

CONTENTS

Abstract	ii
Problem Status	ii
Authorization	ii
INTRODUCTION	1
EXPERIMENTAL METHODS	1
RESULTS AND DISCUSSION	2
Electrochemical Oxidation of PbO-L	2
Densities	4
Resistivities	5
Mechanism of the Oxidation of PbO-L and Corrosion of Lead in H_2SO_4	6
Crystal Structures	7
ACKNOWLEDGMENT	11
REFERENCES	11

ABSTRACT

Tetragonal PbO (designated PbO-L) was anodized in H_2SO_4 solution at room temperature, and became converted to a dark-brown-to-metallic-black material resembling PbO_2. X-ray diffraction examination of the anodic product showed that it was neither of the known polymorphs of PbO_2 but had retained the diffraction pattern of the original tetragonal PbO. The oxidized material had many of the chemical properties of PbO_2, an ohmic resistivity of 82×10^{-2} ohm-cm, and an open circuit potential in 1.225 sp gr H_2SO_4, 52 mv above that of βPbO_2 in the same acid. Chemical analysis showed a stoichiometry of $PbO_{1.91}$. Crystal morphologies were examined in the electron microscope.

Studies on the mechanism of PbO-L oxidation indicate that oxygen may enter the PbO-L lattice as atoms, take two electrons from the Pb present in the lattice and then diffuse through the lattice as ions. Two possibilities for the logical placements of the additional oxygen in the lattice are the fluorite-related LaOF and the PbFCl layer structure types, both with the same space group as PbO-L, P4/nmm. It is not possible at this time to determine which if either of these possibilities is the actual structure.

PROBLEM STATUS

This report concludes one phase of the problem; work on other phases is continuing.

AUTHORIZATION

NRL Problem C05-14
Projects SF 013-06-06-4366
and RR 001-01-43-4755

Manuscript submitted July 13, 1967.

THE PLATE MATERIALS OF THE LEAD-ACID CELL

PART 3 - ANODIC OXIDATION OF TETRAGONAL PbO

INTRODUCTION

It has long been known that the crystalline solids associated with the formed positive active material of the lead-acid cell are PbO_2 and $PbSO_4$ (1,2). Before 1956, tetragonal PbO_2 had been identified in such plates, and that year Bode and Voss (3) reported an orthorhombic form of PbO_2 (4-8) in certain positives. A study has been undertaken at this Laboratory to systematically examine the PbO_2 crystals prepared by electrochemical conversion of the separate known crystalline phases commonly found as starting materials in the battery plates. These materials include basic lead sulfates, $PbSO_4$, Pb_3O_4, basic lead carbonates, and orthorhombic and tetragonal PbO. Most of the solid phases present in the unformed paste convert to βPbO_2 upon anodic oxidation (9,10). It has been shown that orthorhombic αPbO_2 results from low porosity or high pH in the active mass during formation (11). Of the phases examined individually from the morphological standpoint, red tetragonal PbO was most unusual. In H_2SO_4 this compound did not oxidize directly to either of the common polymorphic forms of PbO_2 (10,12).

Anderson and Sterns stated that a perfected crystal of tetragonal PbO (designated PbO-L) is "unreactive," and fine-particle sized or "distorted" PbO must be used for thermal oxidation studies, if the oxides with stoichiometries between PbO and PbO_2 are to be obtained by these methods (13). It has also been suggested that αPbO_2 in finished battery plates is formed by anodic oxidation of PbO-L (3,14).

In 1952 Ritchie wrote "Evidently, there is something different about the [electrochemical] formation of PbO_2 from a perfected tetragonal lead monoxide than from the same material after ball milling or from the orthorhombic form [of PbO]. Its [x-ray diffraction] pattern is still largely that of red PbO . . . " (12). This finding has been verified, and this report describes some further work on the anodic oxidation product of PbO-L.

EXPERIMENTAL METHODS

Small trays 7.5 x 2.5 x 0.2 cm were fashioned from pure lead sheet with one end extended so that it could serve as an electrical connection above the electrolyte in small cells. These trays could be mounted directly in the specimen holder of an x-ray diffractometer by bending the extension out of the path of the x-ray beam, and electrolysis could be continued after recording the diffraction pattern by bending the extension back into place. Prior to use the trays were rinsed with ammonium acetate solution and distilled water to remove the air-formed oxide film.

A stiff paste of PbO-L and distilled water was pressed with a stainless steel spatula into each tray, and the mass was dried at 110°C for 2 to 16 hours. Electrolytic cells were assembled in crystallizing dishes with the pasted tray as anodes, sheet lead as counter electrodes, and H_2SO_4 of 1.054, 1.068, and 1.224 sp gr as electrolyte. Anodic treatment at room temperature was continued for various lengths of time up to 2 months. The anodic products were collected on microporous filters, rinsed with distilled water, and dried in air at 110°C. These products were analyzed chemically, boiled in distilled water, digested in H_2SO_4 solutions, and ground by hand in a mortar and pestle.

Several of the experimental cells were cycled, and the discharged and recharged trays of PbO-L were examined by x-ray diffraction. All x-ray diffraction examinations were made with CuK_α radiation on a diffractometer. The preparations were examined in place in the trays after excess electrolyte was blotted off, and on glass slide mounts after removal from the trays. Quartz was used as an external standard.

PbO-L was prepared for this study by treating reagent grade yellow PbO with 15N KOH at 50° to 80°C (15,16). The anodically oxidized crystals and the residues from extracting them with boiling ammonium acetate and HNO_3 (17) solutions were examined in the electron microscope both directly and by carbon replication (18).

Electrodes were fabricated from the oxidized material in electrode vessels of glass having a sealed-in platinum wire lead around which a paste of the oxidized mass and sulfuric acid of various strengths was packed. A salt bridge filled with acid of the same strength made contact with a $Hg\text{-}Hg_2SO_4$ reference electrode submerged in the same acid. Open-circuit potentials were measured daily with a potentiometer for 30 days.

Resistivities were measured by pressing pellets of the dried anodic oxide in a metallographic steel die at 1253.5 kg/cm^2. The resulting thin disks were trimmed with a razor blade to give small oblong specimens. A wire lead was cemented to each end of these samples with conducting cement. The leads served both as current and voltage leads. Resistances of the assemblies were determined with a potentiometer from the measured IR drop that resulted upon application of various dc currents. The currents were measured with standard shunts. Sample dimensions were taken with micrometers.

RESULTS AND DISCUSSION

Electrochemical Oxidation of PbO-L

The original preparation of PbO-L yielded a bright red mass of crystals giving a clear well defined x-ray diffraction pattern characteristic of this material. The small crystals were mainly basal plates which gave strong reflections from the (001) plane as a result of preferred orientation in most of the glass slide mountings for the goniometric x-ray technique. These crystals formed a firm pellet when a paste of the crystals and distilled water was dried in the trays. The mass did not crack or shrink away from the metal, and it remained intact when wet with electrolyte in the cell assembly. The red color persisted until conversion to dark brown material took place. The conversion started at the metal surface and spread visibly into the mass after 5 to 10 min of anodic current application of 2.5 to 5.3 ma/cm^2.

As reported by Ritchie (12) x-ray diffraction showed that an extremely small amount of the material became converted to βPbO_2, but the major portion of the anodized pellet gave the x-ray diffraction pattern of PbO-L. It had the color and chemical properties of PbO_2. It was not soluble in $NH_4C_2H_3O_2$ solution at room temperature as were the original crystals. It reacted with and liberated chlorine from HCl solutions, and it had a chemical analysis corresponding to a stoichiometry of $PbO_{1.91}$. Boiling crystals of $PbO_{1.91}$ in distilled water did not cause recrystallization. Anodization for as long as three days at elevated potentials with vigorous gassing did not result in a conversion to αPbO_2 or βPbO_2. Grinding by hand in a mortar and pestle did not produce any change in the x-ray diffraction pattern.

Extraction with boiling $NH_4C_2H_3O_2$ solution and HNO_3 disintegrated the crystals of $PbO_{1.91}$, and the residue was a mixture of αPbO_2 and βPbO_2 as determined by x-ray diffraction examination.

The preparations were examined in the electron microscope, and carbon replicas of the anodic product $PbO_{1.91}$ are shown in Fig. 1. The small acicular crystals of αPbO_2 and βPbO_2 obtained by extraction of $PbO_{1.91}$ are shown in Fig. 2.

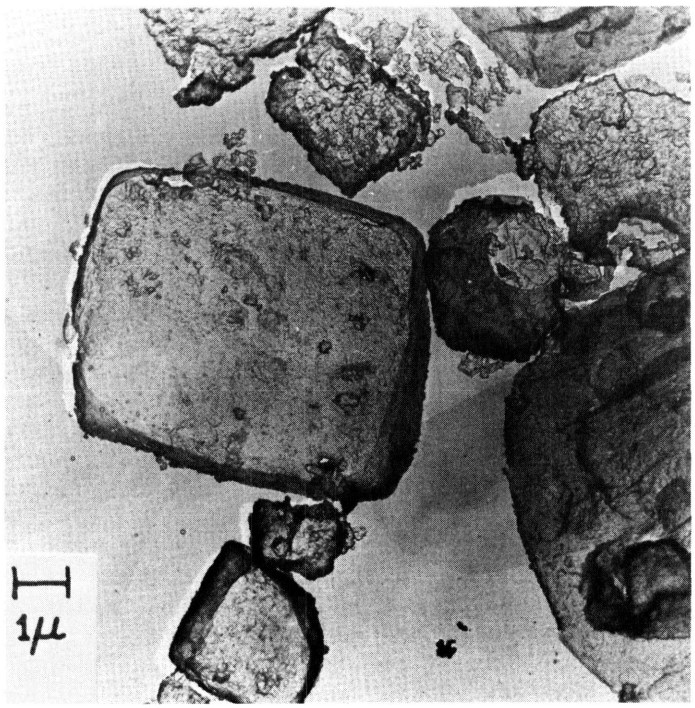

Fig. 1 - Electron micrograph of a carbon replica of $PbO_{1.91}$. The large crystal at the center of the picture is an example of the retention of original PbO-L morphology in the oxidized material.

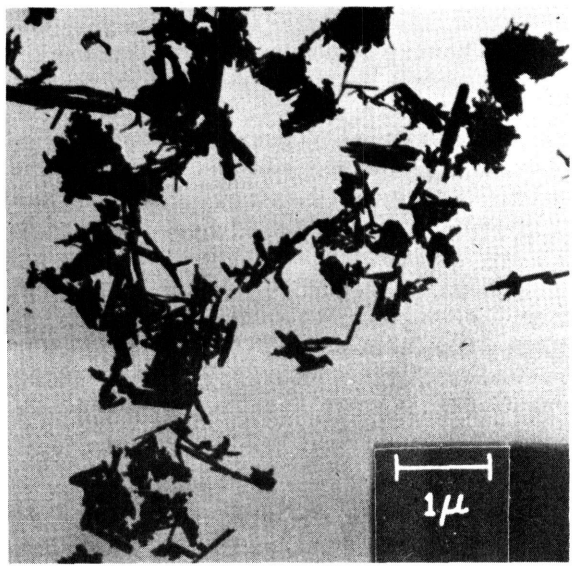

Fig. 2 - Electron micrograph of acicular crystals of α and βPbO_2 obtained by extraction of $PbO_{1.91}$ with hot ammonium acetate solution

The open-circuit potentials of electrodes fabricated from $PbO_{1.91}$ and βPbO_2 in H_2SO_4 solutions were:

H_2SO_4 sp gr	βPbO_2 (v)	$PbO_{1.91}$ (v)	ΔE (v)
1.2247	1.033	1.085	0.052
1.068	0.946	0.942	-0.004

measured against the $Hg\text{-}Hg_2SO_4$ reference electrode. In the more concentrated acid, $PbO_{1.91}$ is apparently the less stable crystal form; however, in the 1.068 sp gr acid, the difference of 4 mv may not be thermodynamically significant, and the two materials appear to have about equal stability.

$PbO_{1.91}$ became discharged to $PbSO_4$ in sulfuric acid solution. When a pellet of the material was cycled in either 1.054 or 1.250 sp gr H_2SO_4, the x-ray diffraction patterns showed increasing amounts of βPbO_2 on the recharged electrodes together with possible trace amounts of αPbO_2, while the pattern of PbO-L decreased in intensity with each cycle.

It was pointed out by Bode and Voss (3) that αPbO_2 could be derived from PbO-L if oxygen were packed into the lattice, accompanied by relatively small displacements in the atomic positions. The product obtained by anodization of PbO-L in this work would correspond to the intermediate fluorite related phase they suggested. Machtinger-Convers (19) observed an extraneous electrochemical arrest and suggested, as one alternative, the possible existence of an unidentified higher oxide of lead, PbO_x where $1.7 < x < 2$. On the other hand recent studies of the lead-oxygen system (7,8,20) have not shown a higher oxide other than the accepted αPbO_2 and βPbO_2 polymorphs and the PbO_x phases where x is less than 1.7.

The possibility was considered that one or more of these recognized intermediate lead oxide phases (7,13,20) was formed during the oxidation of PbO-L, but no evidence of the presence of any of these oxides was found in the preparations in this study.

In earlier work on the anodic oxides formed on lead in sulfuric acid, layers of PbO-L were observed to be present over a wide range of potentials (21-23). Electron diffraction examinations showed a phase related to PbO-L (24); subsequently it was reported that this material was removed from the metal surface and identified as αPbO_2 (25). It appears possible that the anodic corrosion product while attached to the metal surface is identical with the material obtained in this present work by oxidation of PbO-L and that it became converted to αPbO_2 upon extraction with $NH_4C_2H_3O_2$. A highly oxidizing material was chemically detectable on the surface of lead anodes when they were polarized just above the reversible oxygen potential, while only divalent compounds were identified by diffraction examinations. Lander (21,22) discussed the anomalous stability of the PbO-L coating on lead anodes in H_2SO_4.

It is likely that $PbO_{1.91}$ is a metastable phase at ordinary temperatures and pressures, but it does not rapidly undergo recrystallization. The change in volume between $PbO_{1.91}$ and βPbO_2 would be an expansion from 23.88 to 24.84 cc/g-mole, and the electrode measurements correspond to a difference in free energy of 2.4 kcal/mole in 1.2247 sp gr H_2SO_4.

Densities

Ideal maximum densities of crystalline materials may be calculated from the lattice parameters as determined by x-ray diffraction. If the oxidized form of PbO-L described

in this report is taken as having an ideal composition of PbO_2 encompassed within the same lattice as the original PbO-L, it would have an x-ray density of 10.035 g/cc. This is compared with the presently known lead oxides in Table 1 (3,13,20). Further high-pressure investigations such as those which have shown the polymorphic relation between αPbO_2 and βPbO_2 (7,8,20) may show $PbO_{1.91}$ to be a second high-pressure polymorph.

Table 1
X-Ray Densities of Lead Oxides

Compound	System	Cell Parameters (Å)	X-Ray Density
$PbO_{1.91}$	Tetragonal	a = 3.9729 c = 5.0192	10.035*
αPbO_2	Orthorhombic	a = 4.988 b = 5.962 c = 5.466	9.773†
βPbO_2	Tetragonal	a = 4.941 b = 3.374	9.647
$Pb_{12}O_{19}$	Monoclinic	a = 7.753 b = 10.848 c = 11.502 (β = 88°56')	9.580
Pb_2O_3	Monoclinic	a = 7.006 b = 5.632 c = 3.909 (β = 82°19')	10.046
Pb_3O_4	Tetragonal	a = 8.815 c = 6.656	8.924
PbO	Orthorhombic	a = 5.489 b = 4.755 c = 5.891	9.645
PbO	Tetragonal	a = 3.9729 c = 5.0192	9.359

*This work.
†Balance of this table is taken from Ref. 20.

Resistivities

Resistivities of lead oxides have been determined in conjunction with investigations of the materials from the widely different viewpoints of electrochemistry, solid state physics, and polymorphism. It is difficult to make an absolute measurement of resistivity on a material such as lead oxide because all specimens do not lend themselves to fabrication into perfectly uniform, pore-free masses. As emphasized by White and Roy (20) the measurements are a composite of bulk, contact, surface, and grain-contact resistances, and therefore are of relative rather than absolute significance.

The resistivity of $PbO_{1.91}$ was ohmic with an average value of 82×10^{-2} ohm-cm as measured in this work. In Table 2 are listed some of the reported values for resistivities of the compounds occurring in the lead-oxygen system. The specific resistance of

Table 2
Resistivities of the Oxides of Lead
(Representative Values)

Compound	Resistivity (ohm-cm)	Reference
$PbO_{1.91}$	82×10^{-2}	This work
βPbO_2	74×10^{-4}	Thomas (26)
βPbO_2	10	White and Roy (20)
αPbO_2	2.6	White and Roy (20)
PbO_2 (unspecified form)	1 to 10	Schuster (27)
PbO_2 (sputtered)	1×10^{-2}	Lappe (28)
$Pb_{12}O_{19}$	4.4×10^{4}	White and Roy (20)
Pb_2O_3	1.7×10^{12}	White and Roy (20)
Pb_3O_4	9.6×10^{11}	White and Roy (20)
Pb_3O_4	1×10^{8}	Schuster (27)
PbO (massicot)	8×10^{13}	White and Roy (20)
PbO (massicot)	1×10^{13}	Schottmiller (29)
PbO (litharge)	2×10^{11}	Schottmiller (29)
PbO (unspecified form)	1×10^{8}	Schuster (27)

$PbO_{1.91}$ increased with rise in temperature, indicating electronic or n-type conductivity in common with other lead oxides.

Mechanism of the Oxidation of PbO-L and Corrosion of Lead in H_2SO_4

It has been pointed out by several investigators that oxygen seems to be a mobile species in PbO-L (29,30), and Kabanov and coworkers (31) demonstrated that atomic oxygen penetrated through a Pb-PbO_2 anode. The relatively small size of the neutral oxygen atom (Table 3) probably accounts for its ability to pass into the lead oxide lattices. The interlayer distance in the lattice of PbO-L is slightly larger than that between Pb atoms in the metal lattice itself (16,32). According to structure analyses unshared electron pairs in a metallic lead orbital are directed "into the interlayer void" (16,33). It is possible to visualize atomic oxygen penetrating this void and bonding with these electrons. The change in color from bright red to dark brown or metallic black indicates that a considerable change in the nature of the bonding takes place in the process.

Table 3
Atomic and Ionic Radii of Lead and Oxygen

Species	Bonding Type	Radius Å	Ratio to O^{2-} Radius
O	Neutral radius	0.63	—
	Van derWaals contact	1.40	—
	Covalent sp^3 hybrid	0.66	—
O^{2-}	Ionic	1.40	—
Pb	Metallic	1.74	—
	Covalent	1.64	—
Pb^{2+}	Ionic	1.18	0.84
Pb^{4+}	Ionic	0.84	0.60

Anodic oxidation of PbO-L could begin at a voltage below the reversible potential of the positive plate of the lead-acid cell and would be expected to be related to the liberation of atomic oxygen by electrolysis of water. Recent studies have shown that deposition of atomic oxygen on noble metal electrodes begins at 0.88 ± 0.07 v relative to the normal hydrogen electrode in H_2SO_4 (34).

The ease with which the pellet of PbO-L was converted to the dark brown mass having many properties of PbO_2 suggests that the passage of an oxygen species into the lattice is kinetically an easy process and would explain the peak in the corrosion rate of lead observed by Lander (21,22) when the surface was covered by a layer of material identified as PbO-L by x-ray diffraction. The potential at which the corrosion rate of lead began to rise sharply corresponded approximately to the reversible oxygen potential and may indicate that atomic oxygen is liberated on the oxide surface by oxidation of water. By taking two electrons from the Pb present in the lattice oxygen could diffuse through the PbO-L lattice as oxide ion; this would be followed by a reaction at the oxide-metal interface. Such a mechanism would be akin to the solid phase mechanism proposed by Lander to account for the divalent corrosion reaction. When present in the unformed positive active material paste of the lead-acid cell, PbO-L would be among the first materials to oxidize. This work has shown that $PbO_{1.91}$ has excellent electrical conductivity, and, if properly distributed through the paste, it could form conducting paths aiding in the subsequent conversion of other paste components.

It has also been pointed out that $PbO_{1.91}$ cannot be expected to function well as a passivating coating on metallic lead because oxygen can penetrate the lattice and perpetuate the corrosion process (10). The passive range for lead anodes begins at a higher potential and results from the formation of an outer coating of βPbO_2 at the solution interface.

Crystal Structures

In discussing crystal structures it is useful to think of the atoms and ions as little rigid spheres carrying uniform or directed charges (35-40). The more common radii pertinent to the lead-oxygen system are listed in Table 3. It is perhaps worthwhile to point out that the neutral atoms are quite different in size from the corresponding ions, increasing or decreasing depending upon whether electrons are added to form anions or subtracted to form cations. On the other hand, covalent radii are about the same as those of the neutral atoms, because in this type of bonding the outer shell electrons are mutually shared between atoms and not pictured as far removed from their habitual orbitals.

Many ionic crystal structures are determined simply by the manner in which various sized spheres can pack together most effectively. The most stable combinations for various sizes have established these radius ratio restrictions:

Structure Type		Radius Ratio Cation/Anion
RX	RX_2	
CsCl	fluorite	≥0.73
NaCl	rutile	0.73-0.41
ZnS	cristobalite	≤0.41

The structure of tetragonal PbO is both well known and most unusual, since it is shared with only one other compound, SnO (16,32). Dickens (33) has recently re-examined the bonding to verify that covalent and van der Waals linkages are characteristic of the material. Wyckoff (41) pointed out that the structure may be considered a metallic lead array distorted and expanded by the introduction of oxygen in sheets. The structure shows that the oxygen atoms have in effect penetrated in directions parallel to (100) and (010) planes in lead, but not in planes parallel to (001), thereby producing a structure of tetragonal symmetry by expanding the lead lattice in two perpendicular directions but not significantly in the third. We may think in terms of metallic lead with $a_0 \cong b_0 = c_0 =$ 4.95 Å. These change upon oxidation to tetragonal PbO with a = b = 5.62 Å while $c_0 =$ 5.01925 Å remains close to the original c_0 of 4.95 Å in metallic lead. The unusual structure of the oxide is made up of composite layers (of lead and oxygen atoms) linked together solely through the lead atoms by van der Waals bonds. The observed interatomic distances of 2.32 Å are in agreement with the assumption that the Pb-O linkages are covalent (Table 4). The peculiar array of four oxygen atoms in a square all to one side of the lead at once brings to mind the CsCl structure, because the anions of each PbO_4 group look like half of the typical anion cube of the CsCl RX_8 unit. The radius ratio of Pb^{+2} and O^{-2} is 0.84 which lies within the CsCl packing range; however, as mentioned above, this structure is not found for PbO; hence it is not considered an ionic crystal.

Table 4
Observed Interatomic Distances

Crystal Form	Atom Pairs	Interatomic Distances (Å)
Metallic lead	Pb-Pb	3.50
PbO-L (no oxygen between)	Pb-Pb	3.84
PbO-L (oxygen between)	Pb-Pb	3.69
PbO-L	Pb-O	2.32
βPbO_2	Pb^{4+}-O	2.16

The crystal structures of the two recognized polymorphic forms of PbO_2 are related, and the bonding is primarily ionic with a Pb^{4+}-O^{2-} separation of 2.16 Å. With a radius ratio of 0.6 the coordination of anions about the cation is expected to be six, and oxygen octahedra surrounding each of the lead ions are observed in both αPbO_2 and βPbO_2 (4,5,42-46).

The possible existence of a fluorite related polymorph of PbO_2 has been discussed by several investigators but has not been observed (3,8). The ionic radius ratio clearly places PbO_2 in the rutile structure range; however, several materials are known to exhibit both rutile and fluorite-type structures (36). In some oxides, ZrO_2 for instance,

the fluorite structure is a high-temperature polymorph stabilized at room temperature by foreign atoms (47). Fluorite related lattices have been determined for the intermediate oxides of lead, and these are known to have true- and near-cubic arrangements of the lead atoms. In these compounds this fluorite related structure is characterized by sufficient anion vacancies to give the stoichiometries of the PbO_x phases (7,13,20,48,49).

The chemical analysis of $PbO_{1.91}$ obtained for the anodic oxidation product of PbO-L shows that oxygen has penetrated the lattice by some mechanism, and the retention of the x-ray diffraction pattern of PbO-L indicates that the relative positions of the heavy lead atoms in the lattice have not been altered detectably. Because the original morphology of the crystals was retained (Fig. 1), it seems likely that major shifts in the positions of the original oxygen atoms did not take place either. However, the changes in color and other properties to those of common PbO_2 indicate that the nature of the bonding between the lead and oxygen in the original PbO-L lattice has changed from primarily covalent to at least partially ionic. It can be seen from Table 3 that the radial sum of covalent lead and oxygen is 2.30 Å, and from Table 4 that PbO-L has four oxygens associated with each lead atom at a distance of 2.32 Å. The sum of the ionic radii of Pb^{4+} and O^{2-} is 2.24 Å; thus the structure of PbO-L already has the atoms at distances to permit this ionization by transferring the originally covalently shared electrons. The oxygen atoms happen to be placed 2.80 Å apart. This is twice the radius of the oxygen ion. It is concluded that this fortuitous geometry can tolerate the change from covalent to Pb^{4+}-O^{2-} ionic bonding without necessarily disturbing the structure already present in the crystal. The ionization of the oxygens in the square all to one side of the lead could capture the lead ion and prevent its taking up a position at the center of the plane of the square to form the usual equatorial array in a regular octahedron.

The question, then, is to suggest logical placements of the additional oxygen in the lattice. Two possibilities come to mind: the fluorite — related γLaOF and the PbFCl layer structure types, both with the same space group as PbO-L, namely P4/nmm. The fluorite type has been discussed by Bode and Voss as a possible intermediate oxidation step in the formation of αPbO_2 from PbO-L (3). This structure for $PbO_{1.91}$ requires an array of eight oxygens around each lead atom. The lead would be expected to shift to a position of symmetry between them as appears to take place in thermal oxidation with formation of the PbO_x phases (13,49). The PbFCl structure is a more common one. It has a PbF_4 arrangement resembling one-half of the fluorite structure. The chlorine atoms are placed in a puckered layer between these semifluorite units. These suggested structure possibilities for $PbO_{1.91}$ are shown in Fig. 3.

In a fluorite type structure the coordination of the cation is eight, whereas in the PbFCl layer structures the coordinations are not "normal"; nevertheless, about fifty compounds are known to have this kind of structure (41). These two structure possibilities for $PbO_{1.91}$ both require closest approach of oxygen atoms of approximately 2.5 Å, which is considerably less than the ionic radial sum of 2.8 Å; however, both known forms of PbO_2 and many other oxides (35) have anion-anion contacts of about this length.

Of the two suggested structures for $PbO_{1.91}$ the fluorite-related one is appealing because it offers an anion bonding scheme that appears feasible, and because the added oxygens fill, as it were, the sheets of oxygen already present in PbO-L. However, the bonding cannot be entirely ionic or the structure would be expected to spontaneously recrystallize to the stable octahedral symmetry called for by the radius ratio. The small Pb^{4+} ion would "rattle" around in the available space (40). The stoichiometry of $PbO_{1.91}$ does suggest that this structure may be stabilized by 9 at -% of PbO just as cubic zirconia is stabilized by MgO (47). In addition, recent investigations of rutile (51) and several isomorphs have shown that the form stable at room temperature converts to high-pressure phases with fluorite related structures. These in turn recrystallize to the αPbO_2 structure upon release of pressure. The appearance of the αPbO_2 structure is considered to be characteristically a metastable quench product of the high pressure polymorphs.

Fig. 3 - Possible structures for $PbO_{1.91}$. Two possibilities for packing additional oxygen into the PbO-L lattice are shown. The original atoms remain in place, and the inserted oxygens are indicated by the heavily outlined circles. Oxygen is shown as large circles and lead as small circles. Projections are given on the b_0 face, and numbers within the circles indicate the fraction of an edge length above the projection plane for placement of the atomic centers. A third alternate placement of the additional oxygen atoms in a tetragonal distortion of the square antiprism positions would require a highly improbable cation-anion contact of 1.9 Å. The structure of PbO-L is retained unchanged: a_0 is 3.9729 Å; c_0 is 5.0192 Å (space group P4/nmm); O is in 000 and ½½0; Pb is in 0½u and ½0ū (u = 0.2385); and there are 2 moles per unit cell.

(a) Fluorite-related structure (γLaOF type). In this structure a layer of oxygen atoms invades the PbO-L structure along the median plane, taking up positions midway between the oxygens already present in the lattice. These identical planes of oxygen atoms may be thought of as held together by the highly charged Pb^{+4} ions present in alternate blocks. The four additional oxygens would be placed in the general positions 00½; ½½½. The significant interatomic distances in this structure would be (Å) for O-O: 2.50 (4) and 2.80 (8), and for Pb-O: 2.32 (4) and 2.38 (4). As in the fluorite structure the "boxes" of oxygen atoms surrounding each metal atom would share edges but not faces.

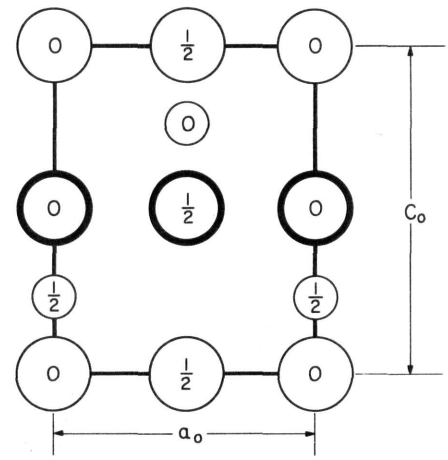

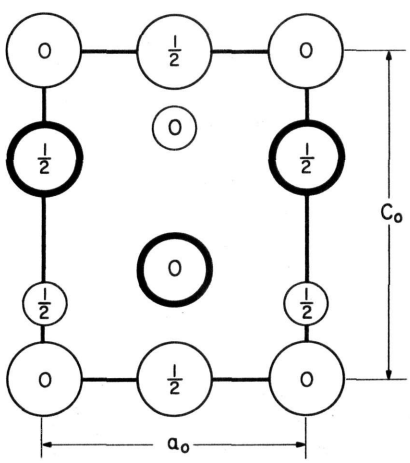

(b) Layer lattice (PFCl type). In this structure the additional oxygens take up positions corresponding to the Cl positions in PbFCl. If it is assumed that the inserted oxygen takes up the Pb^{4+}-O^{2-} distance observed in PbO_2 of 2.16 Å, the following parameters define the positions: 4 O in 0½u' and ½0ū', where u' is 0.6688. Oxygen atoms would be placed nearly in tetragonal close packing with the O-O distances (Å): 2.59 (4), 2.81 (4), 3.37 (4), and 3.90 (4), and the Pb-O distances 2.16 (1), 2.32 (4), 2.84 (4), and 2.86 (1).

(c) A packing drawing of lead and oxygen in the layer lattice. It is possible to view this structure as strings of severely distorted octahedra in the c_0 direction. The lead atoms are displaced into one-half of the octahedron, causing extension in an apical direction and foreshortening in the opposite, with equatorial edges and apices shared.

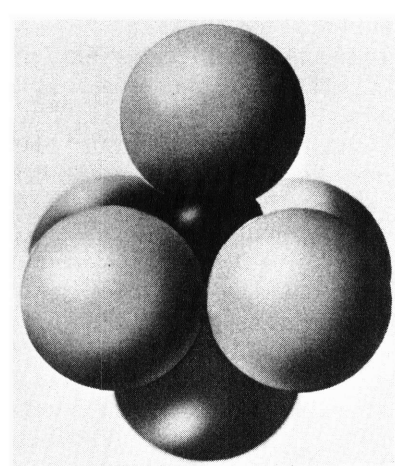

The PbFCl layer structure is appealing because it represents a closest packing of anions within the existing lattice; however, the coordination is unusual. This structure may be looked upon as a tetragonal distortion of face-centered packing of the large anions, stabilized by the presence of Pb^{4+} ions in alternate interstices. In this arrangement, strings of highly distorted octahedra may be visualized (Fig. 3c) where the lead atom is displaced to one side of the equatorial plane, with the result that one apical distance is extended as the opposite one is contracted.

Further investigation of the oxidation product of PbO-L would be of interest. Neutron diffraction could show the positions of the additional oxygen atoms, and it may be possible to analyze the structure by means of x-ray diffraction from anodized single crystals of PbO-L.

It is impossible to close this discussion without suggesting that electrochemical oxidation offers an experimental tool for the preparation of unusual polymorphic materials under favorable circumstances. The high energy densities attainable by electrical polarization appear to be sufficient to promote the formation of unusual polymorphs. It seems likely that room-temperature anodic oxidation of the intermediate oxides of lead, the PbO_x phases, would give rise to a form of PbO_2 with a true cubic fluorite type structure.

ACKNOWLEDGMENT

The chemical analysis of the oxidation product obtained from PbO-L was kindly performed by Mr. O. R. Gates of the Metallurgy Division, NRL.

REFERENCES

1. Mazza, L., Atti Accad. Nazl. Lincei 4:215 (1926)

2. Vinal, G.W., "Storage Batteries," 4th ed., New York:Wiley, 1955

3. Bode, H. and Voss, E., Z. Elektrochem. 60:1053 (1956)

4. Zaslavskii, A.I., Kondrashov, Iu.D., and Tolkachev, S.S., Dokl. Akad. Nauk S.S.S.R. 75:559 (1950)

5. Zaslavskii, A.I. and Tolkachev, S.S., Zh. Fiz. Khim. 26:743 (1952)

6. Astakhov, I.I., Kiseleva, I.G., and Kabanov, B.N., Dokl. Akad. Nauk S.S.S.R. 126:1041 (1959)

7. White, W.B., Dachille, F., and Roy, R., J. Am. Ceram. Soc. 44:170 (1961)

8. Kirkinskii, V.A., Zh. Neorgan. Khim. S.S.S.R. 10:1966 (1965)

9. Burbank, J., J. Electrochem. Soc. 113:10 (1966)

10. Burbank, J., in "Power Sources 1966," D.H. Collins, editor, New York:Pergamon, p. 147, 1967

11. Ikari, S., Yoshizawa, S., and Okada, S., J. Electrochem. Soc. Japan 27:487 (1959)

12. Ritchie, E.J., "The Transition of the Polymorphic Forms of Lead Monoxide," Eagle-Picher Res. Labs., Fourth Quarterly Report, ONR Research Contract NONR-512(00), July 1952

13. Anderson, J.S. and Sterns, M., J. Inorg. Nucl. Chem. 11:272 (1959)

14. Dodson, V.H., J. Electrochem. Soc. 108:401 (1961)

15. Applebey, M.P. and Reid, R.D., J. Chem. Soc. (London), 2129 (1922)

16. Moore, W.J. Jr. and Pauling, L., J. Amer. Chem. Soc. 63:1392 (1941)

17. Bagshaw, N.E., Clarke, R.L., and Halliwell, B., J. Appl. Chem. 16:180 (1966)

18. Bradley, D.E., J. Appl. Phys. 27:1399 (1956)

19. Machtinger-Convers, M., Ann. Chim. 6(13):395 (1961)

20. White, W.B. and Roy, R., J. Am. Ceram. Soc. 47:242 (1964)

21. Lander, J.J., J. Electrochem. Soc. 98:213 (1951)

22. Lander, J.J., J. Electrochem. Soc. 103:1 (1956)

23. Wolf, E.F. and Bonilla, C.F., Trans. Electrochem. Soc. 79:307 (1941)

24. Burbank, J., J. Electrochem. Soc. 103:87 (1956)

25. Burbank, J., J. Electrochem. Soc. 104:693 (1957)

26. Thomas, U.B., Trans. Electrochem. Soc. 94:42 (1948)

27. Schuster, H.J., Chem. Ing. Tech. 28:654 (1956)

28. Lappe, F., J. Phys. Chem. Solids 23:1563 (1962)

29. Schottmiller, J.C., J. Appl. Phys. 37:3505 (1966)

30. Laws, K.L., J. Chem. Phys. 39:1924 (1963)

31. Kabanov, B.N., Weisberg, E.S., Romanova, I.L., and Krivolapova, E.V., Electrochimica Acta 9:1197 (1964)

32. Dickinson, R.G. and Friauf, J.B., J. Amer. Chem. Soc. 46:2457 (1924)

33. Dickens, B., J. Inorg. Nucl. Chem. 27:1503 (1965)

34. Schuldiner, S. and Roe, R.M., J. Electrochem. Soc. 110:332 (1963)

35. Pauling, L., "The Nature of the Chemical Bond," 3rd ed., Ithaca:Cornell University Press, 1960

36. Roy, R., in "The Physics and Chemistry of Ceramics," C. Klingsberg, editor, p. 45, New York:Gordon Breach, 1963

37. Slater, J.C., J. Chem. Phys. 41:3199 (1964)

38. Sasvari, K., Acta Phys. Acad. Sci. Hung. 11:333 (1960)

39. Sasvari, K., Acta Phys. Acad. Sci. Hung. 11:345 (1960)

40. Evans, R.C., "An Introduction to Crystal Chemistry," 2nd ed., Cambridge, England: Cambridge University Press, 1964

41. Wyckoff, R.W.G., "Crystal Structures," 2nd ed., vol. I, New York: Interscience, 1963

42. Ferrari, A., Rend. Accad. Nazl. Lincei 2:186 (1925)

43. Darbyshire, J.A., J. Chem. Soc. (London), 211 (1932)

44. Halliwell, B., J. Inorg. Nucl. Chem. 27:1005 (1965)

45. Talkachev, S.S., Vestnik Leningrad Univ. 13(4):Ser. Fiz. i Khim. (1):152 (1958)

46. Leciejewics, J. and Padlo, I., Naturwissenschaften 49:373 (1962)

47. Duwez, P. and Odell, F., J. Amer. Ceram. Soc. 23:274 (1950)

48. Bystrom, A., Arkiv. Kemi Min. Geol. 25A(13):1 (1947)

49. Bystrom, A., Arkiv. Kemi Min. Geol. 20A(11):1 (1945)

50. Burbank, J., J. Electrochem. Soc. 113:295 (1966)

51. McQueen, R.G., Jamieson, J.C., and Marsh, S.P., Science 155:1401 (1967)

This page intentionally left blank.

Security Classification

DOCUMENT CONTROL DATA - R & D

(Security classification of title, body of abstract and indexing annotation must be entered when the overall report is classified)

1. ORIGINATING ACTIVITY (Corporate author) Naval Research Laboratory Washington, D.C. 20390	2a. REPORT SECURITY CLASSIFICATION Unclassified 2b. GROUP

3. REPORT TITLE

THE PLATE MATERIALS OF THE LEAD-ACID CELL. PART 3 - ANODIC OXIDATION OF TETRAGONAL PbO

4. DESCRIPTIVE NOTES (Type of report and inclusive dates)

A final report on one phase of a continuing problem.

5. AUTHOR(S) (First name, middle initial, last name)

Jeanne Burbank

6. REPORT DATE December 29, 1967	7a. TOTAL NO. OF PAGES 18	7b. NO. OF REFS 51

8a. CONTRACT OR GRANT NO. NRL Problem C05-14 b. PROJECT NO. SF 013-06-06-4366 c. RR 001-01-43-4755 d.	9a. ORIGINATOR'S REPORT NUMBER(S) NRL Report 6613 9b. OTHER REPORT NO(S) (Any other numbers that may be assigned this report)

10. DISTRIBUTION STATEMENT

This document has been approved for public release and sale; its distribution is unlimited.

11. SUPPLEMENTARY NOTES	12. SPONSORING MILITARY ACTIVITY Dept. of the Navy (Naval Ship Systems Command and Office of Naval Research), Washington, D.C. 20360

13. ABSTRACT

Tetragonal PbO (designated PbO-L) was anodized in H_2SO_4 solution at room temperature, and became converted to a dark-brown-to-metallic-black material resembling PbO_2. X-ray diffraction examination of the anodic product showed that it was neither of the known polymorphs of PbO_2 but had retained the diffraction pattern of the original tetragonal PbO. The oxidized material had many of the chemical properties of PbO_2, an ohmic resistivity of 82×10^{-2} ohm-cm, and an open circuit potential in 1.225 sp gr H_2SO_4, 52 mv above that of βPbO_2 in the same acid. Chemical analysis showed a stoichiometry of $PbO_{1.91}$. Crystal morphologies were examined in the electron microscope.

Studies on the mechanism of PbO-L oxidation indicate that oxygen may enter the PbO-L lattice as atoms, take two electrons from the Pb present in the lattice and then diffuse through the lattice as ions. Two possibilities for the logical placements of the additional oxygen in the lattice are the fluorite-related LaOF and the PbFCl layer structure types, both with the same space group as PbO-L, P4/nmm. It is not possible at this time to determine which if either of these possibilities is the actual structure.

DD FORM 1 NOV 65 1473 (PAGE 1)

S/N 0101-807-6801

Security Classification

Security Classification

14. KEY WORDS	LINK A ROLE	LINK A WT	LINK B ROLE	LINK B WT	LINK C ROLE	LINK C WT
Lead-acid cell						
Tetragonal lead oxide						
Anodic oxidation						
X-ray diffraction						
Crystal structure						

DD FORM 1 NOV 65 1473 (BACK) (PAGE 2)

GPO 934-485

Security Classification