NRL Report 6572

The Randle Cliff Radar Digital Range-Measuring Instrument

P. L. Watkins and F. D. Clarke

Search Radar Branch
Radar Division

July 19, 1967

NAVAL RESEARCH LABORATORY
Washington, D.C.

DISTRIBUTION OF THIS DOCUMENT IS UNLIMITED

CONTENTS

Abstract	iii
Problem Status	iii
Authorization	iii
INTRODUCTION	1
BRIEF DESCRIPTION OF OPERATION	1
GENERAL DESCRIPTION OF OPERATION	3
Basic Timing Pulses	3
The Control Functions	5
UNRESTRICTED MODES OF OPERATION	10
Mode I	11
Mode II	13
Mode III	14
Mode IV	14
Mode V	15
Mode VI	15
Mode VII	16
Mode VIII	16
RESTRICTED MODES OF OPERATION	16
DETAILED DESCRIPTION OF THE INSTRUMENT	16
General Capabilities	16
Basic Principles of Operation	17
Operator Switch Functions	19
DETAILED CIRCUIT DESCRIPTION	21
Trigger Input Control	21
Count Recycle Control Sequence	23
Readout Countdown Control	25
Binary-BCD Counting Modes	26
Start-Stop Count Delay	27
Extended-Range Measurement	27
Ambiguous DRAMI Mode Combinations	28
SUMMARY	29

This page intentionally left blank.

ABSTRACT

The Randle Cliff Radar (RCR) facility at the NRL Chesapeake Bay Division, which employs a 150-ft-diameter steerable antenna, uses digital data-acquisition techniques. In a complex of digital instrumentation, one instrument incorporates several noteworthy and unique features.

The Digital Range-Measuring Instrument (DRAMI) is a multiple-mode radar-range digitizer. Though basically a gated-pulse counter capable of continuous readout of range information in either binary or BCD form, the DRAMI is unique in that unambiguous target range measurements are obtainable to a maximum range of 100,000 naut mi (± 0.1 naut mi), even though the target lies beyond a number of radar interpulse periods.

Another feature permits the accumulation, prior to readout, of several successive radar range values. The values are stored in the DRAMI register until a readout command is received, at which time display and recording are accomplished. Still another feature is the "Test" mode of operation, in which all commands are internally generated and the DRAMI is, in a sense, made to check itself. In the event of improper operation, several key signals can be manually generated from the front panel, thus permitting the operator to pinpoint technical difficulties.

The DRAMI is a versatile, reliable, and accurate device. It was specifically developed for use with the RCR system in order to facilitate range studies of fast-moving or distant targets. However, the principles of its operation can be applied to meet the needs of any radar system.

PROBLEM STATUS

This is a final report on one phase of the problem; work on other phases is continuing.

AUTHORIZATION

NRL Problem R02-05
Project RF 001-02-41-4001

Manuscript submitted March 30, 1967.

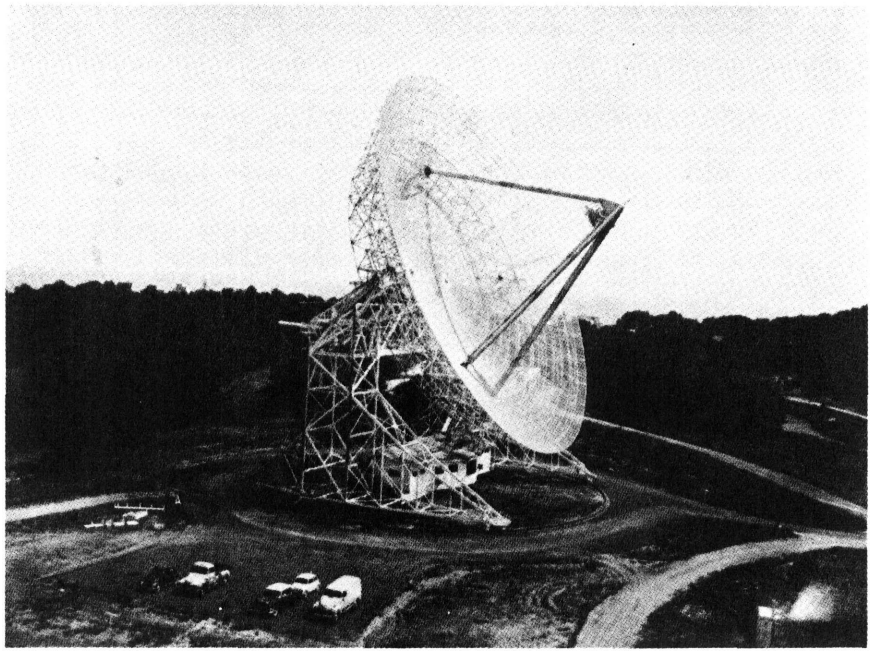

Frontispiece - Randle Cliff Radar facility
with 150-ft-diameter antenna

THE RANDLE CLIFF RADAR DIGITAL RANGE-MEASURING INSTRUMENT

INTRODUCTION

The Randle Cliff Radar (RCR) facility at the NRL Chesapeake Bay Division, which employs a 150-ft-diameter steerable antenna,* uses digital-measurement techniques† to permit computer processing of recorded data. In addition to ionospheric studies, the RCR instrument is used for tracking fast-moving targets such as missiles and satellites. Studies of this type of target are facilitated when the range can be precisely ascertained and recorded frequently.

In the RCR system, as in all radar systems, the range of a target is determined by measuring the time required for the transmitted radar pulse to reach the target and return in the form of an echo. Since the velocity of electromagnetic waves is known, this so-called transit time is proportional to distance. Range precision is therefore dependent on the accuracy of the transit-time measurement. An instrument using digital techniques has been designed to make this measurement. The Digital Range-Measuring Instrument, or DRAMI (Fig. 1), was designed and constructed using commercially available logic circuitry, in lieu of commercial digital counters, which could not fully satisfy the requirements without considerable modification and additional circuitry. This instrument is one of the more versatile instruments that has been developed for the RCR system, especially in view of the fact that instrumentation for this system requires constant changes to meet specific needs. The equipment is unique, accurate, reliable, and compact, and may be utilized with any radar system requiring the rapid and accurate measurement of radar target range.

This report on the range-measuring instrument is divided into three main parts. The first gives a brief description of the basic operation of the instrument, the second gives a general and more graphic description of the equipment, and the last part gives a more detailed discourse of some of the actual step-by-step functions involved.

BRIEF DESCRIPTION OF OPERATION

The Digital Range-Measuring Instrument (DRAMI) is basically a digital counter with a continuously running, internal counting-rate generator. The output of the counting-rate generator is a square wave whose period has been chosen to be equivalent to a distance of one-tenth nautical mile. The counter is started at the same instant the radar pulse is transmitted. It continues counting one-tenth-nautical-mile increments until the target echo returns, at which instant the counter stops. The "counter on" time is exactly the same as the transit time, and the range value existing in the counter stages at stop time is made available for recording at the radar repetition rate, or at a selected slower rate in either binary or binary-coded-decimal form. This value represents, to the nearest tenth, the exact number of nautical miles between the radar and its target. A basic block diagram representing these functions is shown in Fig. 2.

*L.V. Blake, editor, "A VHF-UHF Missile- and Space-Research Radar with a 150-foot Steerable Antenna," NRL Report 5801, Aug. 27, 1962.

†P.L. Watkins and A.M. Knopp, "A Digital Magnetic Tape System for Recording Radar Data," NRL Report 6584, to be published.

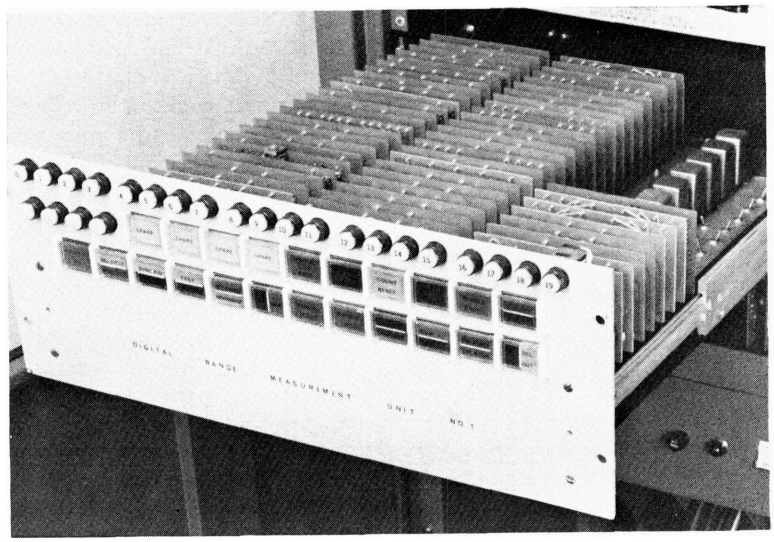

a. Front panel and internal controls (arrow)

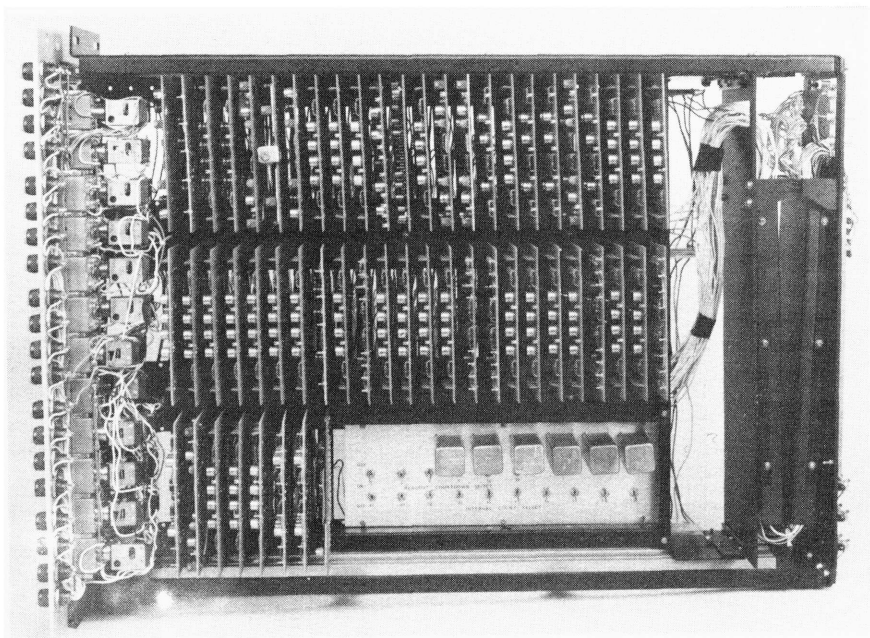

b. Top view, illustrating layout of circuit cards and internal controls

Fig. 1 - The Digital Range-Measuring Instrument

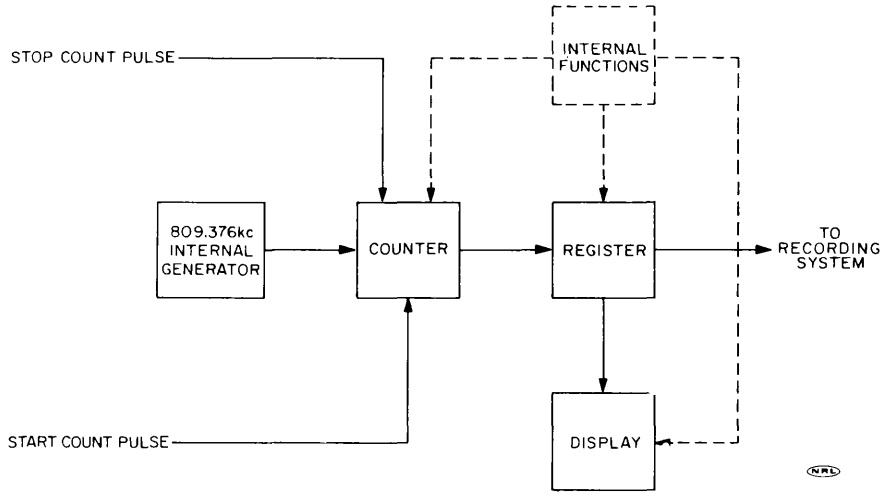

Fig. 2 - Basic block diagram of the DRAMI internal functions

At this point the range of the target could be displayed and recorded, if all that were required were one range value. The normal pulse-repetition frequency (prf) of the Randle Cliff system, however, is 100 pulses per second (pps), and it is desirable to obtain a range reading for each transmitted pulse and received echo combination. Since the "counter on" time is variable, depending on target range, the "counter off" time is also variable, and if the range count were displayed directly from the counter it would only be possible to display and record range during this "counter off" time. If the target were a distant one, requiring nearly all of a single prf period for "counter on" time, the display and record time would be prohibitively short.

A storage register is added to provide an almost continuous display of range count. Each new count is transferred to the register; it is displayed and may be recorded until another count is ready to be transferred. Thus the only time the register is required to be in an "off" condition is during the reset and transfer time of only a few microseconds.

The DRAMI was designed to operate in conjunction with an existing magnetic-tape data-recording system in the Randle Cliff Radar, so its recording output is in either binary or 1-2-4-8 BCD, depending on the operator's choice (see section entitled "The Control Functions").

GENERAL DESCRIPTION OF OPERATION

The previous section of this report, entitled "Brief Description of Operation," describes the DRAMI counter operation as starting automatically with each transmitter trigger pulse and stopping automatically with each received target echo. While this is the normal and most common "mode" of operation, it does not fully describe the DRAMI operation. Other conditions make it necessary to generate these control pulses in different ways or at different rates. This section is devoted to an enlargement of the details of DRAMI circuitry, and will be discussed in the following order: (a) Basic Timing Pulses, and (b) Control Functions.

Basic Timing Pulses

Start-Count Pulse – The counter is normally started by a pulse coincident with the transmitter trigger pulse, but in the event of a failure the DRAMI operator can check the

system by engaging certain manual controls (which will be discussed in the section entitled "The Control Functions"), and can thereby manually generate a start-count pulse.

Stop-Count Pulse – After the counting operation has begun, it will continue until the occurrence of a stop-count control pulse. In normal operation this pulse is automatically generated and is coincident with the target echo, but there are three other ways this pulse can be generated: (a) internally by means of the manual control mentioned previously, (b) internally and at the end of a selected internal count which will be fully described under that heading in the section entitled "The Control Functions," and (c) externally, by a pulse coincident with the target echo, but only after the end of a selected internal count. The purpose of the selected internal count circuitry briefly is to extend the range-readout capability of the DRAMI beyond the first prf period (in the RCR system this prf range is normally about 808 naut mi).

Recycle Sequence – After the occurrence of the stop-count pulse, a four-pulse recycle sequence is initiated. The first of these pulses is used to derive the display reset pulse, which returns the register to zero-count. The second pulse is used to derive a pretransfer pulse, which resets the extended-range circuitry. The third of these pulses is used to derive a count-transfer pulse, which transfers new information from the counter to the register. The fourth and final pulse in this sequence is used to derive a count-reset pulse, which returns the counter to zero-count. Depending on the needs of the operator, this four-pulse sequence will be initiated either internally by the trailing edge of the stop-count pulse, or externally by means of an external readout trigger from the data system. The time required for the recycle sequence to occur is approximately 65 microseconds, with each pulse separated from adjacent pulses by about 15 microseconds.

End-of-Sample Pulse – Before any new range information can be transferred from the counter to the register (and thereby displayed and recorded), a control pulse must occur which will be referred to as the end-of-sample (EOS) pulse. This pulse is the signal which allows the next readout trigger (whether internal or external) to effect transfer and display. Transfer can then be effected by the readout trigger, provided that the readout trigger occurs during the counter-off time. During the time period between these EOS pulses the counter may start, stop, and recycle normally, counting new range information, but this information will not be transferred to the register. Information may be displayed and recorded during this period also, but it should be emphasized that this information will not be up-to-date range information until after the occurrence of the EOS pulse. An automatic signal, referred to as a special code mark (SCM), is provided within the range unit whenever duplicate information is recorded. The EOS pulse may be generated internally or externally, depending on the selected mode.

It should be pointed out that the EOS pulse is not the only one which governs the rate at which new information is transferred to the register. This rate is also dependent upon the rates of the stop-count and readout pulses. By way of clarification, it can be said that the rate at which new range information may be transferred and recorded is limited to the least common frequency of the EOS, stop-count, and readout pulses.

Other Details of Operation – When the counter is not functioning properly, the failure may be due to the loss of either the count reset, the display reset, or the enable count pulse (described under "The Control Functions"). Therefore provision is made for manually generating each of these pulses from separate panel controls. These controls would not be engaged during normal operations.

Except for power supply, all circuitry is contained within a single rack-mounted unit, as shown in Fig. 1. In the RCR system it is mounted integrally with the data-recording system (Fig. 3).

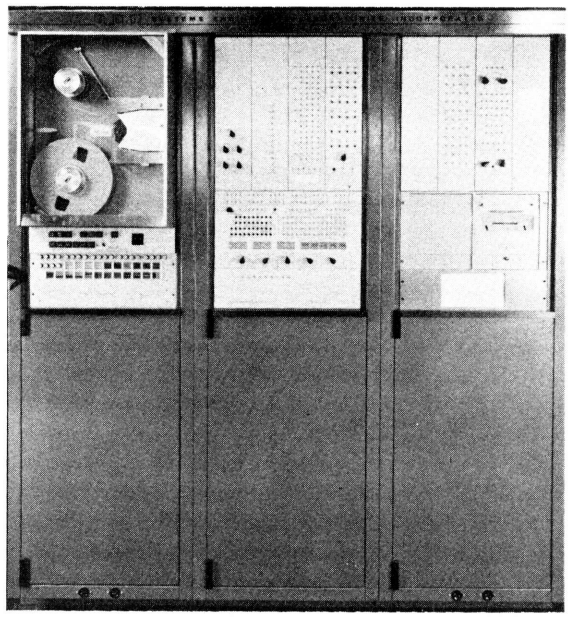

Fig. 3 - The digital data-acquisition system with DRAMI installed

At first glance it would appear to the observer that hundreds of combinations, or "modes," of the panel controls are possible. This is indeed the case, but only a few of these modes of operation are pertinent. The others are either meaningless or produce erroneous readings. It is therefore necessary that the operator be aware of what takes place in each mode of operation, so that he may select intelligently, according to his needs. The modes of operation will be fully described under sections entitled "Unrestricted Modes of Operation" and "Restricted Modes of Operation."

The Control Functions

The range-unit control functions are principally those controls appearing on the front panel of the DRAMI (Fig. 4). There are, however, a few internal controls. Each panel control is either a momentary or an alternate action push-type switch equipped with associated lamps to indicate which control position is engaged. They are identified in the following paragraphs.

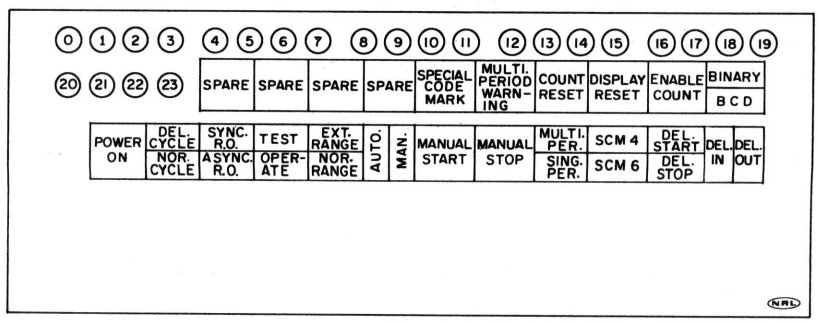

Fig. 4 - Front panel controls

The Power On Control – This control furnishes main power to the range counter in the form of four dc voltage levels: +6 V, -6 V, -12 V, and -28 V.

The Automatic-Manual Control – In Automatic the count is started by an external pulse coincident with the transmitter pulse, and the stop-count signal will be generated either by an external pulse approximately coincident with the received target echo, or by an internally generated pulse coincident with the end of the selected internal count. In Manual the start-count and stop-count are generated by means of panel controls.

The Manual Start Control – This is a momentary switch used to generate a start-count pulse manually.

The Manual Stop Control – This is a momentary switch used to generate a stop-count pulse manually. As explained previously in the section entitled "Basic Timing Pulses," the trailing edge of this pulse will initiate the recycle sequence. The Manual Start and Manual Stop controls are provided for purposes of checking counter operation in the absence of automatic start and/or stop pulses.

The Delayed-Normal Cycle Control – In Normal Cycle the recycle pulse sequence is initiated by the trailing edge of the stop-count pulse; therefore the counter circuitry will recycle each time a stop-count pulse occurs. It should be emphasized, however, that transfer of new range information to the register depends on the occurrence of a readout pulse. Normal Cycle is used when the readout pulse occurs at some integral multiple or submultiple of the stop-count frequency. In Delayed Cycle the recycle pulse sequence is initiated by an external readout pulse, the data-recording trigger (DRT). The count is therefore held until the DRT pulse is generated. After that time the counter recycles, and information is transferred to the register. Delayed Cycle is used when the readout pulse is not synchronized with the stop-count pulse.

The Synchronous-Asynchronous Readout Control – In synchronous readout (RO) an external readout pulse, the DRT is used to effect transfer and display. This same pulse will initiate the recycle sequence if the Delayed-Normal Cycle control is in the Delayed Cycle position. If, when operating in Synchronous RO, the DRT is not synchronized with the stop-count pulse, it may be necessary to delay the recycle sequence until the DRT (or readout trigger) has occurred. One would, under these circumstances, select Delayed Cycle. However, if it is known that the DRT is coincident with the range-gate pulse, then the position of the Delayed-Normal Cycle control does not matter. It should be reemphasized that in Synchronous RO, count transfer will take place following the readout pulse only if a prior, externally generated, EOS pulse has occurred. In Asynchronous RO, the recycle sequence, including count transfer, is initiated by the trailing edge of the stop-count pulse. Again, an EOS pulse is necessary to the transfer operation, but in the Asynchronous RO condition the EOS pulse is derived from an internal countdown of readout pulses (the trailing edges of stop-count pulses). The frequency of the EOS pulse is therefore equal to, or an integral submultiple of, the readout-pulse frequency. The Asynchronous RO condition provides the operator with a means of selecting a transfer rate different from that which would be available from the Randle Cliff data system, and with a means of operating the range unit independent of that data system.

Delay Start-Delay Stop Control – The purpose of the Delay Start-Stop circuitry is best described in conjunction with a brief explanation of some of the conditions which exist in the RCR system. As in Fig. 5, the transmitted and received pulses are approximately 100 microseconds in width, with a 15-microsecond rise time. The true range is most nearly measured when it is represented by the time interval between one point on the transmitted pulse and the corresponding point on the received target echo pulse, as between points C and F. The interval between pulse centers is somewhat easier to measure, but any two corresponding points will suffice. A range error is introduced if range is represented by the time interval between noncorresponding points, such as

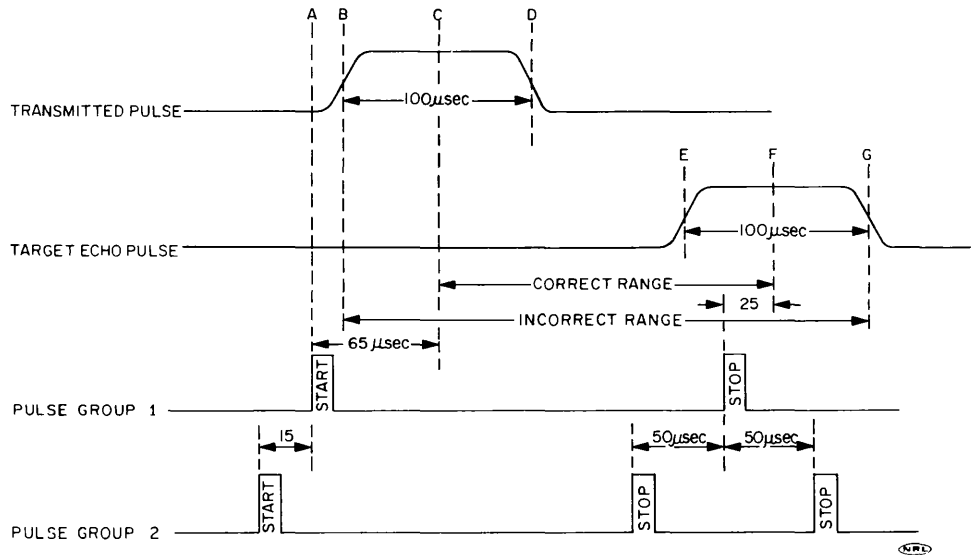

Fig. 5 - Delay correction diagram

between B and G. If the counter within the DRAMI is started by a pulse which occurs at point A and is allowed to count until the occurrence of a pulse at point F, the resulting count would obviously be greater than the actual range. In order to utilize the optimum resolution capability of the DRAMI, provision has been made to delay either the start-count or the stop-count pulse. This delay is variable from 5 to 55 microseconds. The choice of delay interval is based on the timing of trigger sources which are available in the Randle Cliff system for use as start-count and stop-count triggers. Pulse group 1 of Fig. 5 shows the times which will probably be selected for use in Randle Cliff system. The reader will note that the start-count pulse is 65 microseconds prior to the center of the transmitted pulse, while the stop-count pulse is 25 microseconds prior to the center of the received target echo. If the start-count pulse is delayed 40 microseconds before it activates the counter, both pulses will occur 25 microseconds prior to their respective pulse centers. The correct range will then be displayed and recorded. Pulse group 2 of Fig. 5 shows other pulses available in the Randle Cliff system for use as start-count and stop-count signals.

Delay In-Out Control – In Delay In the Delay Start-Stop control is in effect, and its position determines which pulse will be delayed. In Delay Out neither start nor stop pulse is delayed by internal circuitry of the range unit. This arrangement provides a means of completely deactivating the delay circuitry and using the timing of the pulses as they occur at the range-unit input.

The Special Code Mark Control – This switch provides a means for manually generating a special bit-mark for the recording system. The indicator associated with this control is arranged to indicate not only when the Special Code Mark (SCM) control itself is engaged, but also when a special code mark originates due to an absence of the display reset pulse.

The SCM 4 - SCM 6 Control – This switch selects the recording character in which a special code mark will appear. This character will always be the first character of either a four-character channel (SCM 4) or a six-character channel (SCM 6). This control and the previous one pertain only to special recording information and do not affect basic counter operation.

The Count-Reset Control – This momentary switch is used to generate manually a count-reset pulse. All other circuitry is bypassed, and this pulse goes directly to the reset point.

The Display-Reset Control – This is also a momentary switch used to generate manually a display-reset pulse. As before, this pulse goes directly to the reset terminal.

The Enable Count Control – This is a momentary switch used to generate manually a pulse which would ordinarily correspond in time to the trailing edge of the count-reset pulse. The enable-count pulse prepares the start-count gate to pass a start-count pulse. This control and the two preceding ones provide a means of manually actuating pulses which would normally be automatically actuated during the readout cycle. In the event of failure these controls provide a rapid means of isolating the defective circuit. These controls would never be used unless the DRAMI is not functioning properly.

Single Period-Multiple Period Control – In Single Period the DRAMI functions normally, measuring a range value for each pulse-repetition-frequency period. The counter is stopped and reset to zero before each new count is begun. In Multiple Period, however, the counter is not reset to zero until a specific number of prf periods have passed. Successive ranges prior to that time will add together, so that at reset time, the value in the register is an accumulation of a number of successive values.

The Multiple-Period Warning Light – This is not a control, but it is mentioned here because it has the same physical appearance as a control. This indicator serves as a warning to the operator that he is operating the counter in one of several erroneous modes, and that the count being displayed and recorded is not a correct count. The control settings which will produce this warning are Multiple Period in combination with Extended Range and/or Test.

The Test-Operate Control – In Test each stop-count pulse and recycle sequence is internally generated at the time the counter reaches a count which has been previously selected by the operator. Under these conditions the only external signals required are from the counting-rate generator and the transmitter trigger (the start-count pulse). The Test condition provides the operator with a means of verifying his selected internal count, and a means of checking the range-unit operation as a whole. It should be pointed out, however, that under Test conditions the information displayed is constant for a given selected internal count and does not represent range to a "target."

In Operate the range unit functions normally, using the interval between externally generated stop- and start-count pulses to determine target range.

The Extended-Normal Range Control – In Normal Range the unit counts and displays ranges represented by the time interval between the transmitted pulse and the first received target echo following it. Obviously, the maximum possible range under these circumstances is represented by a time interval slightly shorter than the radar interpulse period (in the RCR system this range is about 800 naut mi). If a target lies beyond this maximum range, the range unit, under Normal conditions, will display a range which is in error by some multiple of 800 naut mi. For example: if the target were to lie at 1200 naut mi, the range displayed would be about 400 naut mi. A device is therefore employed which will allow the range unit to continue counting until it reaches the correct range value.

The Extended-Range condition is best explained by the use of a diagram. Figure 6 depicts the start- and stop-count conditions in the Randle Cliff system, and shows that the target actually lies at a range of about 1200 naut mi. If this is true, then pulse 4 does not represent the echo of pulse 2 but of pulse 1, and the counter should be "on" during the time interval between pulses 1 and 4. The function of the selected internal count, then, is

to cause the DRAMI stop-count control circuitry to ignore pulse 3 and to be affected by pulse 4. Under the prescribed circumstances (target between 800 and 1600 naut mi) every other stop-count pulse will be effective. If, however, the target lies between 1600 and 2400 naut mi every third stop-count pulse will be effective. Each increase in range of an integral multiple of 800 naut mi makes necessary the "skipping" of another stop-count pulse. Thus some range samples are ignored in order to display and record the target's actual range, their number depending on the extent of that range. The maximum extended range possible with the range unit is in excess of 100,000 naut mi. In order to use the selected internal count, the operator must know the target's range within 800 naut mi; moreover, if he is to use this device effectively, the operator should know whether the target is approaching or receding. The reason for the former is that the effective stop-count pulse will, in any case, occur within the prf period (800 naut mi in this system) following the selected internal count interval, and this "effective" stop-count pulse must represent the correct range. The reason for the latter is shown in Fig. 6.

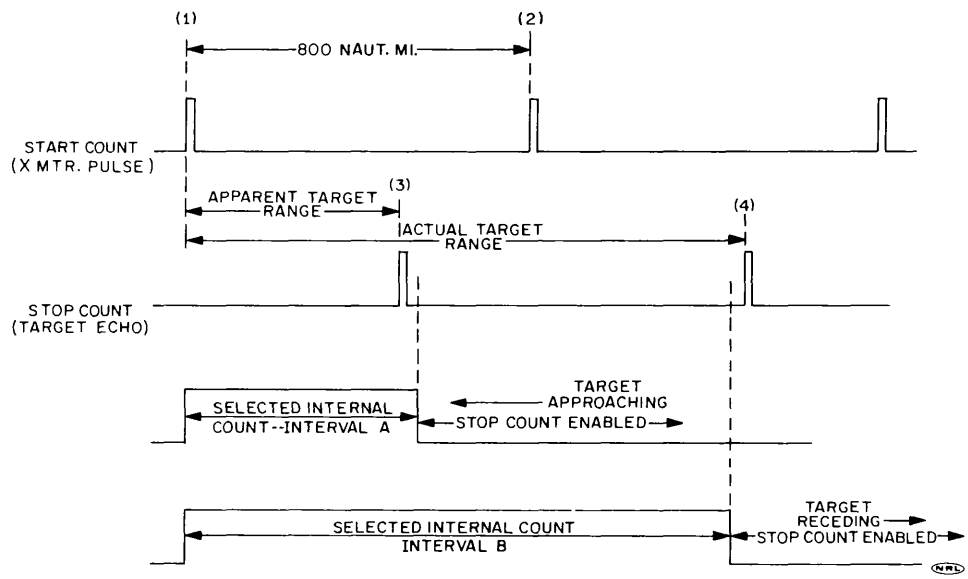

Fig. 6 - Selection of internal count

"Interval A" shows the optimum initial internal count setting for a target at about 1200 naut mi which is expected to approach. Note that valid range information will be acquired only during the 800-naut-mi interval between the end of selected internal count "interval A" and pulse 4. Selected internal count "interval B" shows the optimum initial internal count setting for a target at the same range with the target expected to recede. Again, valid range information will be acquired only during the 800-naut-mi interval following the end of the selected internal count. The selected internal count controls will be fully discussed next.

The Selected Internal Count Controls – The purpose of these internal controls has been previously explained under the Extended-Normal Range control. The Selected Internal Count control is a bank of ten switches. These switches, in binary combination, are used to control the time during which stop-count pulses are ignored by the counter control circuitry. This time duration is variable from 1.2 to 1228 milliseconds in steps of 1.2 milliseconds, corresponding to a range span of approximately 10^2 to 10^5 naut mi, inclusively. The operator will determine the setting of this control on the basis of the minimum target range expected during a particular data-acquisition period.

The Readout Countdown Controls – These are six switches whose function is to control the time of occurrence of the internal EOS pulse, referred to previously under the Synchronous-Asynchronous RO control. This control is effective only when the range unit is being operated in the Asynchronous RO condition. The Readout Countdown control is used to select, in binary steps, stop-count-to-readout ratios of 1:1, 2:1, 3:1, etc., to a maximum of 63:1, so that range data may be transferred and displayed at rates which are different from those available from the RCR data system.

The Binary-BCD Control – This is the control which selects the code of the output and display. Figure 7 shows a typical range display when this control is in Binary. Unshaded circled numerals and controls represent energized lamps. The binary number shown in Fig. 7 is equal to $(2^0 + 2^1 + 2^3 + 2^4 + 2^7 + 2^9 + 2^{10} + 2^{11} + 2^{12} + 2^{14} + 2^{15} + 2^{19})$ (0.1) naut mi, or 58,127.5 naut mi.

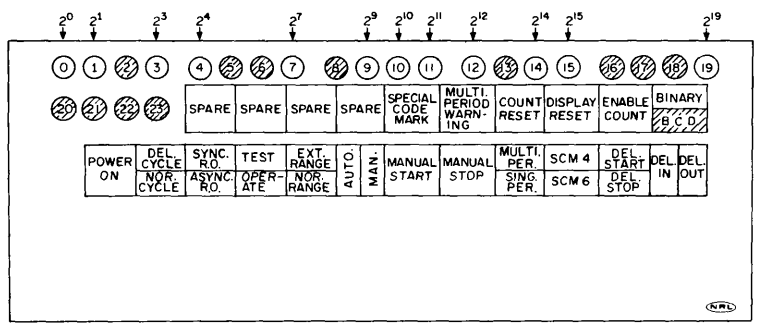

Fig. 7 - A binary display

If the control were in BCD, the same number would be displayed as in Fig. 8. In this case the circled numerals are ignored, and each group of four lights is weighted as shown in the brackets. Each light has the value shown under the bracket. The same number which is displayed is present at the recording output.

UNRESTRICTED MODES OF OPERATION

The "modes" in which the DRAMI can be operated (as mentioned in the section entitled "Basic Timing Pulses") refer to specific combinations of the panel control settings.

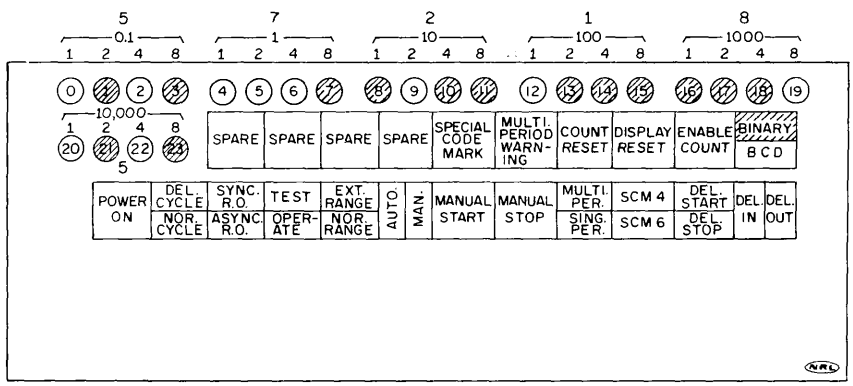

Fig. 8 - A BCD display

In some of these modes the internal controls are effective, but their settings will not be considered as a part of any mode. When an internal control is in effect, its setting will be stated for discussion purposes, and this setting will be in addition to the mode being discussed at the time.

The unrestricted modes have been so named because both the recycle sequence and the EOS pulse are derived from an internal trigger; therefore, the DRAMI control is not dependent on, nor restricted by, the operation of the data-recording system. All of the unrestricted modes of range-unit operation require that the Synchronous-Asynchronous Readout control be in the Asynchronous RO position.

Mode I

A timing diagram, Fig. 9, is provided with the first of these unrestricted modes. The descriptions of other modes will refer to this same diagram and will indicate how the character of the diagram is changed by the mode. The following panel-control settings, Fig. 10, pertain to the first mode of operation (Mode I): Automatic, Delay Out, Asynchronous Readout, Extended Range, Single Period, Normal Cycle, and Operate switches are actuated in addition to Power On.

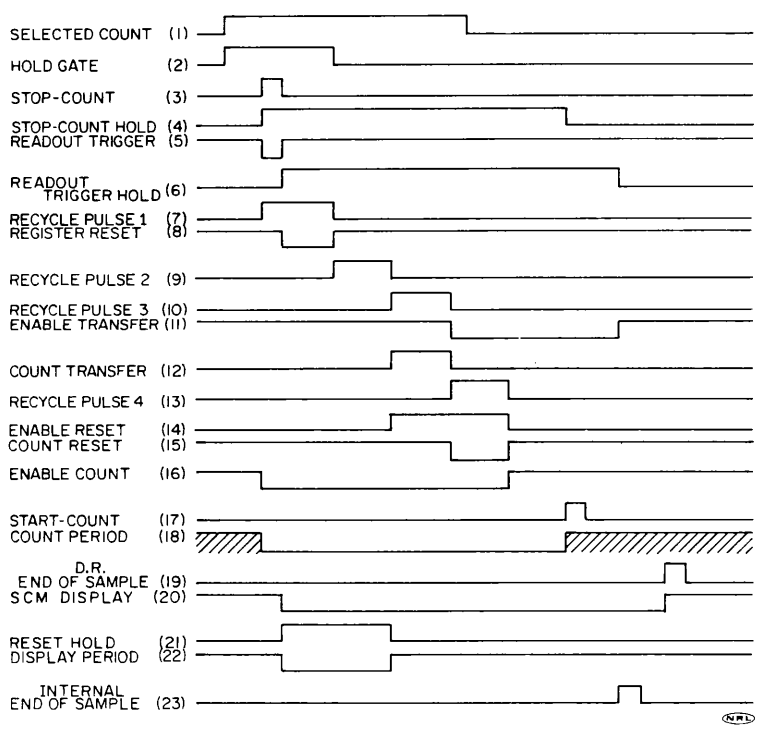

Fig. 9 - Timing pulse diagram

It has been previously stated in the section entitled "The Control Functions" that when the range unit is being operated in the Asynchronous RO condition, the readout countdown control is in effect; therefore, for purposes of discussion, the setting of these controls will be 8:1.

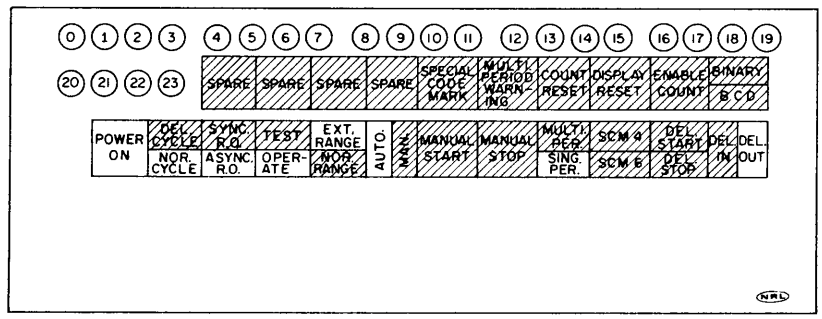

Fig. 10 - Mode I control settings

It has also been stated that when the range unit is being operated in the Extended Range condition, the selected internal count control is in effect; here the control settings will be 512 naut mi and radar prf 100 pps (in order for the DRAMI to read true range, therefore, the target must appear in the range region between approximately 512 and 1220 naut mi).

The sequence of operations, as shown in Fig. 9 (where each control pulse or gate is identified by a number), begins at the time of completion of the selected internal count of 512 naut mi (timing pulse 1), which is the minimum target range expected during the run (the count was started by a previous start-count pulse). The holdout gate (timing pulse 2) is generated at this time. Any stop-count pulse which occurs during the holdout gate interval will stop the counter; therefore such a pulse is shown as timing pulse 3. This pulse energizes the stop-count hold gate (timing pulse 4). The purpose of this gate is threefold: (a) its positive-going edge initiates the first recycle pulse (timing pulse 7), (b) its positive-going edge turns "off" the enable count gate (timing pulse 16), thus assuring that no start-count pulse will actuate the counter for at least 65 microseconds, and (c) it provides a signal that the stop count has occurred.

Because the range unit is being operated in Asynchronous RO (see "The Control Functions"), the readout trigger (timing pulse 5) and the stop-count pulse occur simultaneously. The positive-going edge of the readout trigger is and-gated with timing pulse 4 to initiate the readout trigger hold gate (timing pulse 6). This gate will go negative with the occurrence of an EOS pulse (timing pulse 19). Note that the readout trigger hold gate would not have been energized had a stop-count pulse not occurred prior to the readout trigger. The statement was made earlier that the positive-going edge of the stop-count hold gate initiates the first recycle pulse (timing pulse 7). This pulse is shown to be approximately 20 microseconds long, but all pulse lengths in the recycle sequence are internally adjustable.

During the period that timing pulses 6, 7, and 11 are simultaneously positive, a negative gate is formed (timing pulse 8). Note that the occurrence of this gate is dependent on gates which result from the occurrence of the end-of-sample, stop-count, and readout triggers. The purpose of timing pulse 8 is to reset the register to zero count, and to "turn off" the SCM gate (timing pulse 20). The negative-going edge of timing pulse 7 initiates the second pulse in the recycle sequence, timing pulse 9. The positive-going edge of timing pulse 9 is used to end the holdout gate (timing pulse 2), thus "resetting" the extended-range circuitry (see Fig. 15 later in this report), and preparing it for the next selected internal count cycle. The negative-going edge of timing pulse 9 initiates the third recycle pulse (timing pulse 10). When timing pulses 10 and 11 are simultaneously positive, the count-transfer gate (timing pulse 12) is formed.

The enable transfer gate, timing pulse 11, is positive following the occurrence of an EOS pulse, timing pulse 19, and becomes negative with the occurrence of the negative-going edge of timing pulse 10. During the negative (or "off") time of timing pulse 11, no count can be transferred from the counter to the register. The negative-going edge of timing pulse 12 initiates the fourth pulse in the recycle sequence, timing pulse 13. The inverse of this pulse becomes the count-reset gate, timing pulse 15, which returns the counter to zero count. It should be noted that with the count-reset action, the selected internal count gate (timing pulse 1) also returns to zero (because it is a function of the counter) and remains at zero until the next selected internal count has ended. The positive portion of timing pulse 1 occurs during the time in which all of the selected counter stages are positive; its length is therefore limited to the time increment of the lowest count selected, or to the interval between the positive-going edge of timing pulse 1 and the occurrence of timing pulse 15, whichever is shorter. Although the actual length of the positive portion of timing pulse 1 is relatively unimportant (only the leading edge is used for subsequent events), this explanation is included to give some idea of the operation of the selected internal count. The negative-going edge of timing pulse 13 activates the enable count gate (timing pulse 16), thus making it possible for the next start-count pulse (timing pulse 17) to initiate the counting operation.

With the occurrence of timing pulse 17, the stop-count hold gate (timing pulse 4) is returned to zero, and will remain zero until the occurrence of the next stop-count pulse. The count-gate period (timing pulse 18) is the inverse of timing pulse 4. When this gate is positive the counter is "on," when it is negative, the counter is "off." With the occurrence of this pulse the SCM display gate (timing pulse 20) becomes positive. The negative portion of the SCM display gate (timing pulse 20) represents the period during which special code marks will not be generated (see discussion of Special Code Mark under the section entitled "The Control Functions").

The positive portion of count-display period (timing pulse 20) represents the period during which the count in the register will be displayed. Timing pulse 21 is not pertinent to this mode and will be discussed later. The EOS pulse (timing pulse 19) is the signal that the count in the register has been sampled by the external data-recording system. With the occurrence of the internal EOS pulse (timing pulse 23): (a) readout trigger hold (timing pulse 6) becomes negative, and (b) enable transfer (timing pulse 11) becomes positive.

Mode II

For the description of this mode, all panel controls have the same setting as in Mode I, except that the Normal-Extended Range control is in the Normal Range position, as shown in Fig. 11. Under these conditions, as has been explained previously, every start-count pulse (timing pulse 17) is effective in starting the counter, and every stop-count

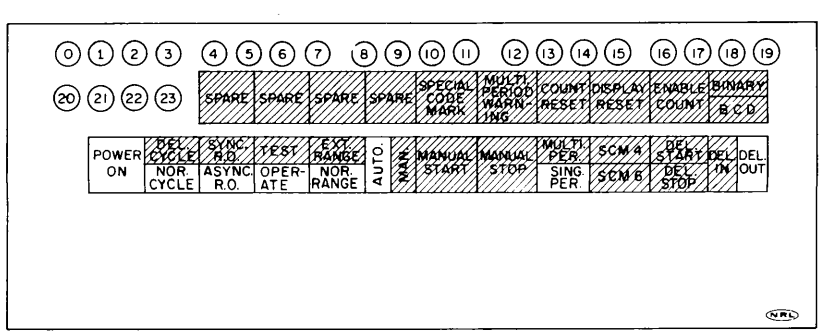

Fig. 11 - Mode II control settings

pulse (timing pulse 3) is effective in stopping it. The selected internal count (timing pulse 1) and the holdout gate (timing pulse 2) are not effective in this mode, even though they are still operative. Correct displayed range, when operating in this mode, is limited to a maximum of approximately 800 naut mi, and all other functions are the same as in Mode I.

Mode III

This mode requires the same control settings as Mode II, except that the Multiple-Single Period control is in the Multiple Period position, as shown in Fig. 12. Under these conditions the counter begins counting with the occurrence of a start-count pulse (timing pulse 17). It stops with the occurrence of every stop-count pulse (timing pulse 3), but the recycle sequence (timing pulses 7, 9, 10, and 13, including the count-reset pulse, timing pulse 15) will not necessarily begin at this time. Depending on the setting of the readout countdown control, the recycle sequence will be generated after one, two, three, etc., to a maximum of 63 stop-count pulses. The count displayed at the time the recycle sequence does occur represents the total number of 0.1-naut mi range increments accumulated between the time of occurrence of the first start pulse after the previous counter reset pulse and the stop pulse which generates the recycle sequence. It should be noted that the Multiple Period control position cannot be used in conjunction with the Extended Range control position to obtain a valid range reading. Whenever this erroneous mode is attempted, the "multiple period warning" light will be observed.

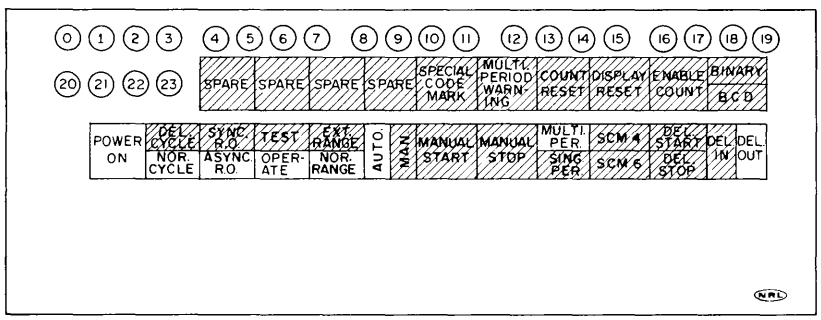

Fig. 12 - Mode III control settings

Mode IV

This mode requires the same control settings as Mode II, except that the Test-Operate control is in the Test position, as shown in Fig. 13. The purpose of this mode is to allow the operator to visually select and check the internal range count of his choice (for extended-range measurement). When the range unit is in Mode IV, the internal-count value selected will be the only reading to appear on the panel. This is accomplished by allowing the counter to start with every start-count pulse (timing pulse 17), and to count up to the selected value. At this time a stop pulse is generated and the recycle sequence (timing pulses 7, 9, 10, and 13) is initiated. This device not only provides the operator with visual verification of the selected internal count but assures him that this circuit is operative. As in Mode III, the Test control position in conjunction with the Multiple Period control position will result in an erroneous count, and a multiple-period warning light will be observed. It should be emphasized that no meaningful "target" information is displayed or recorded in this mode.

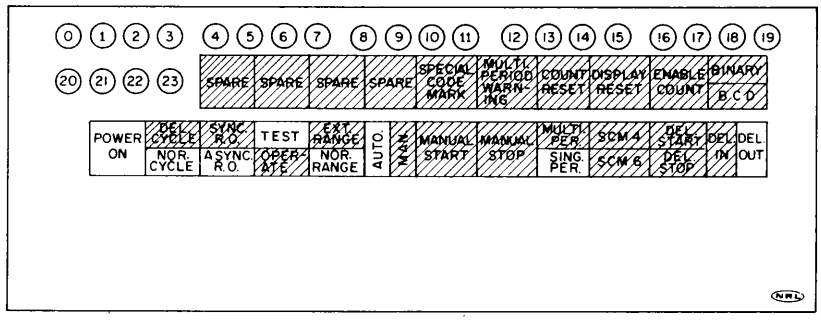

Fig. 13 - Mode IV control settings

Mode V

The control settings for Mode V are the same as for Mode I, except for the following changes: (a) Delayed-Normal Cycle control to Delayed Cycle position, and (b) Synchronous-Asynchronous Readout control to Sync RO position, as shown in Fig. 14. The difference between Mode V and Mode I is that the recycle sequence (timing pulses 7, 9, 10, and 13) is not automatically initiated after the occurrence of a stop-count pulse (timing pulse 3) if delayed cycle is employed. Under these conditions an externally generated pulse is necessary to initiate the recycle sequence, and in the Randle Cliff system this pulse will be generated within the external data-recording system. Depending on the source used to trigger the Randle Cliff data-recording system, the external readout pulse may not occur coincident with the stop-count pulse. The difficulty of noncoincidence is explained in the section entitled "Restricted Modes of Operation," but if Synchronous Readout is employed there is no problem in the event that noncoincidence does occur. The count will simply be "held" in the counter until the external readout command comes from the data-recording system. The DRAMI is thus synchronized with the demands of the Randle Cliff data-recording system. Ordinarily, if the operator is not sure whether there is coincidence, he will use Sync RO in conjunction with Delayed Cycle.

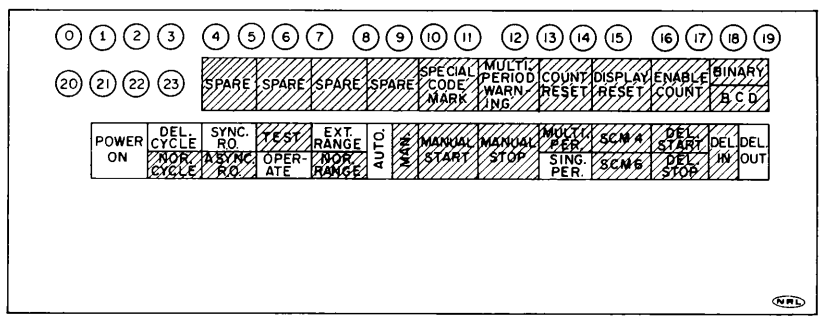

Fig. 14 - Mode V control settings

Mode VI

All control settings for this mode are the same as those for Mode II, except that: (a) the Delayed-Normal Cycle control is Delayed and (b) Synchronous-Asynchronous Readout control is Sync RO. The behavior of the DRAMI under these conditions is exactly the same as for Mode II, except for those differences which have already been described under Mode V.

Mode VII

Mode VII behavior is the same as that in Mode III, except for those differences described above and in Mode V.

Mode VIII

Mode VIII behavior is the same as that in Mode IV, except for those differences described above and in Mode V.

RESTRICTED MODES OF OPERATION

The restricted modes of operation have been so named because the operator must be aware that the data system is being triggered by a source which is coincident with the stop-count pulse. This is true because all of these modes require that the Delayed-Normal Cycle control be in the Normal Cycle position, while the Synchronous-Asynchronous Readout control is in the Sync RO position. Under these conditions the recycle sequence will be automatically generated following the stop-count pulse (timing pulse 3, normal cycle), but in order for the first recycle pulse (timing pulse 7) to form register reset gate (timing pulse 8), the external readout trigger (timing pulse 5) must occur coincident with, or a few microseconds after, the stop-count pulse (timing pulse 3). If the register reset gate (timing pulse 8) is not formed, as would be the case if the triggering source were not coincident with the stop-count pulse, no transfer can take place and readout will cease. The operation of the DRAMI is "restricted" in these modes to conditions which exist when the stop-count pulse and external readout trigger occur simultaneously, and the operator should know that such coincidence is occurring or switch to Delayed Cycle. These modes include any of the previously described modes, but with these two controls set in their "restricted" positions.

A more detailed block diagram is shown as Fig. 15. The numbers in parentheses refer to gates shown in Fig. 9.

DETAILED DESCRIPTION OF THE INSTRUMENT

General Capabilities

The DRAMI is a multiple-mode, 24-bit, gated-pulse counter with internal storage. The basic counting interval is normally controlled by the externally generated radar trigger pulse and the tracking range-gate pulse. Either of the counter-interval control triggers may be delayed internally to introduce range corrections. Unambiguous measurement of target ranges extending beyond one prf interval are made by the preselection of a minimum count in multiples of 100 miles up to 100,000 miles in range.

Readout of data can be internally controlled or externally controlled by signals from the data-recording system. Data are made available continuously for recording and display by panel and remote indicator units because of the internal storage register which holds previously generated data while new range counts are proceeding. The readout data rate can be made slower than the data-generating rate while operating in either external or internal readout mode. When the readout command rate is slower than the range data rate, the counts for each range interval may be totalized prior to readout and recording. The number of counting periods accumulated can be controlled internally or by the data-recording system.

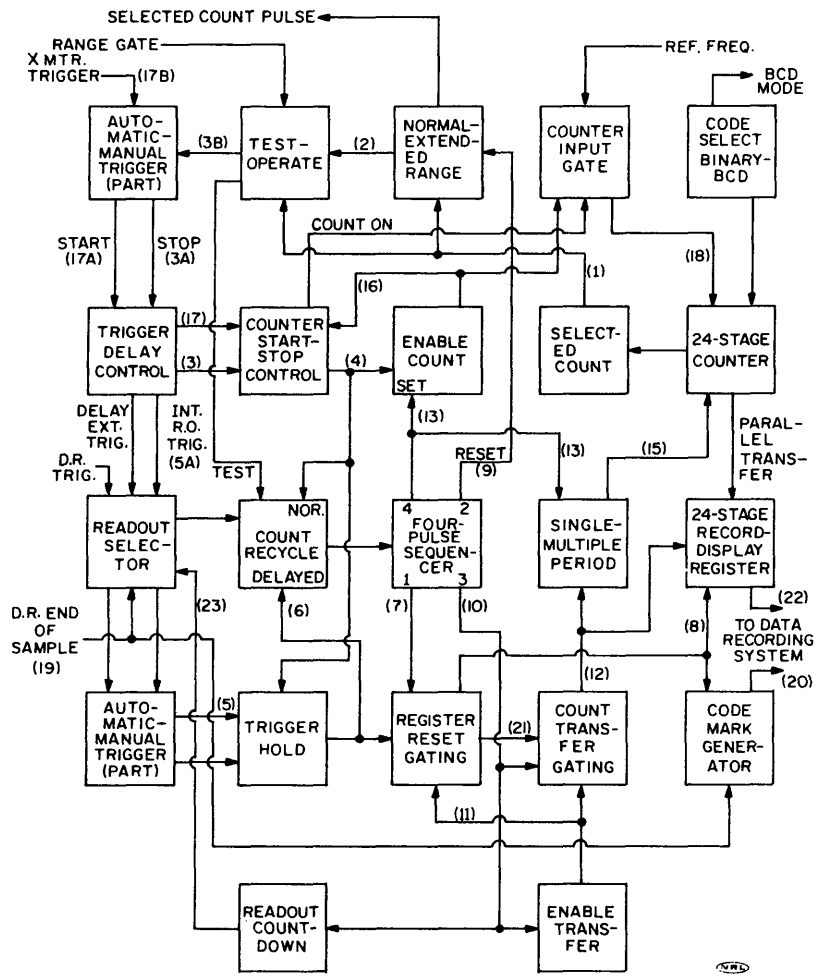

Fig. 15 - Functional block diagram

Operation of the unit can be checked by simulating the external control signals and some of the internally generated control signals by panel pushbuttons. During checkout operations the unit may be operated in a BCD mode for convenience in reading out data to decimal display units separate from the data-recording system.

The interconnections of the DRAMI with the data-recording system and components of the radar system are shown in the integrated system block diagram, Fig. 16. In this system all radar data sampling is synchronized by the range gate pulse output from the range tracker. This pulse also triggers the data scan in the data-recording system and stops the range counter in the DRAMI.

Basic Principles of Operation

The unit is divided into a counter section and a readout section, with their respective control circuits as shown in the simplified block diagram, Fig. 17. The counting interval is generated in the counter mode control circuit, where four triggering modes may be selected. A range-correction factor is inserted by delaying either the selected start count or stop count signal. The end of the selected counting interval starts the recycle

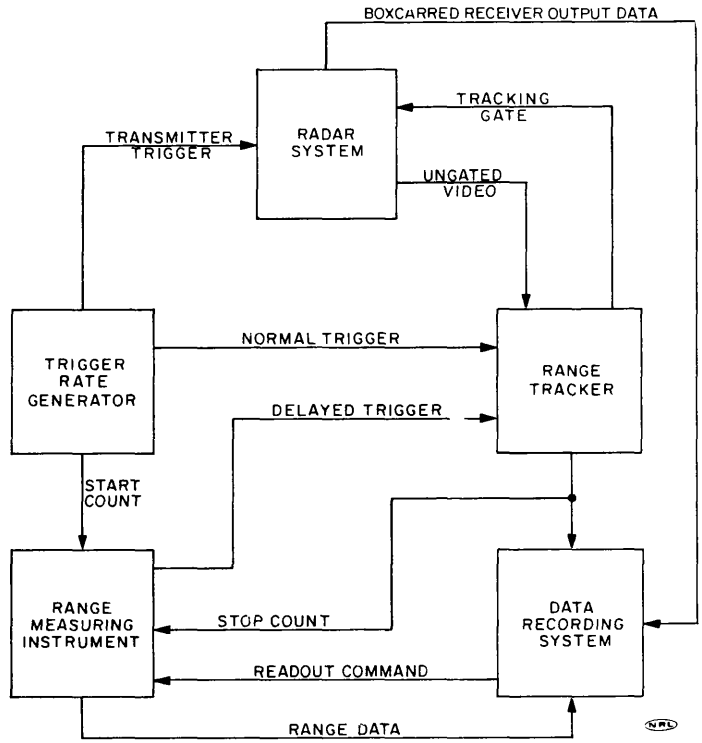

Fig. 16 - Block diagram showing integration of DRAMI into complete RCR system

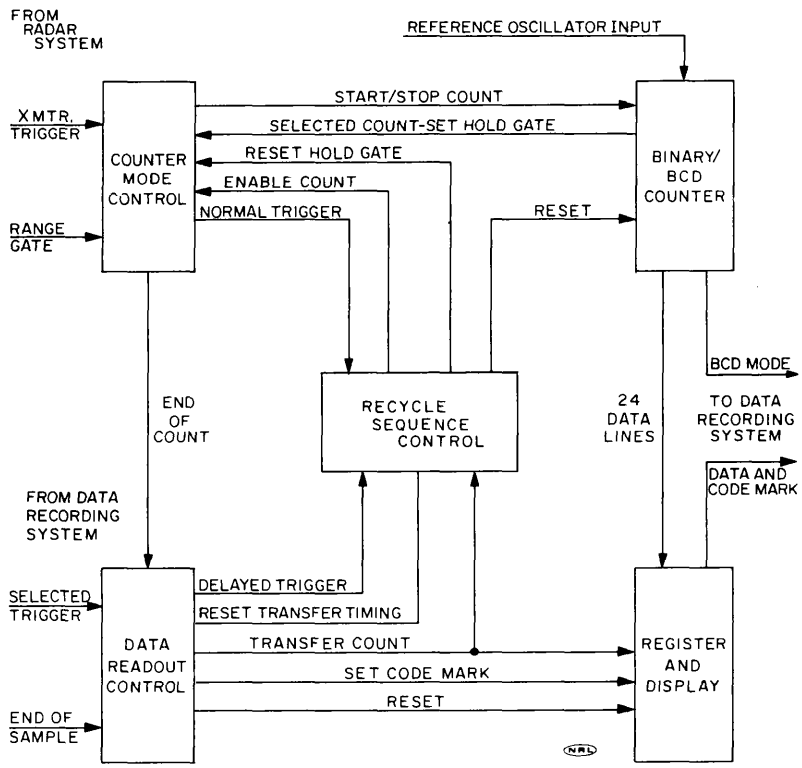

Fig. 17 - Simplified block diagram

sequence, where pulses are generated to control counter reset and data readout. After this sequence of operation, a pulse is fed back to the counter mode control circuit to enable the next count cycle. The counter reset pulse is generated at the count-cycle rate, or at some submultiple of this rate. In the latter case the counts for each period may be totalized prior to readout. The counter contains preselection gates to generate an internal stop-count signal for use in test and extended-range counting modes.

Data readout takes place during the recycle sequence at a rate determined by the frequency of the external trigger and EOS pulse from the data-recording system. Alternatively the readout rate can be internally controlled in submultiples of the count cycle rate.

Normally the counter section operates independently of the readout section; however, the count-recycle sequence can be controlled by the data-recording system, in which case the sequence is delayed with a reduction in maximum count interval or count-cycle rate. This count-cycle rate is controlled through the delayed trigger input to the recycle sequence control. The phasing of the readout is determined by timing pulses from the recycle sequencer, but the frequency of readout is determined by the external triggers from the data system or by internal countdown of transfer timing pulses from the sequence-control circuit.

The outputs from the readout control circuit consist of a reset pulse and a transfer count pulse for the register and display. The transfer count pulse also enables a multiple-period counting mode in the recycle sequence. The data remain stored and displayed continuously, except for the period of the reset and transfer count operation. The output data consists of up to 24 bits in 1/10-naut mi increments of range plus code marks, indicating redundant data samples and if the data is in BCD code.

Operator Switch Functions

These functions are shown in the front-panel layout in Fig. 4 and are discussed in the following paragraphs.

Automatic-Manual – In Automatic, count starts with the external transmitter trigger pulse. The count stop signal depends on the setting of the Test-Operate switch and the Normal-Extended Range switch. In Manual the count starts with the closing of the manual start switch and stops with the closing of the manual stop switch. The manual start and stop switches also control the count readout to the display register.

Test-Operate – In Test the count starts with the externally generated transmitter trigger pulse and stops at a preselected count, as determined by the internal gate time-selection switches. In Operate, the count starts as before and stops with the range-gate pulse externally generated. The Test-Operate switch is inoperative if the Auto-Man switch is in the Manual position. The test mode is used to check the internal delay and jitter in the counter and to verify the internal stop count preselection.

Normal-Extended Range – The count-start signal is selected as before in the Operate position. In Normal position, the count stops with each external range gate pulse. In Extended Range position the count continues until the first range-gate pulse after a preselected count is reached. This mode is used for measuring ranges greater than the radar interpulse period.

Delay Start, Delay Stop – In Delay Start, an adjustable delay is inserted in the start count line. In Delay Stop, the adjustable delay is inserted in the stop count line. This control is operative in either position of the above three switches.

Manual Start – Count starts when this push button switch is closed to test counter operation in the absence of a transmitter trigger pulse. This switch also generates an EOS pulse for controlling the count readout.

Manual Stop – Count stops when this pushbutton is closed to test counter operation in absence of other sources of a stop-count pulse. This switch also generates a display trigger pulse for count readout.

Count Reset – This switch clears all counter stages and is used mainly to verify that the counter is recycling.

Internal Count Selection - This is a group of ten internally mounted switches to select the time for the counter to stop when in the Test position. In the Operate position and with Normal Range, these switches serve no function. In the Extended Range mode, the selected stop-count time becomes a bias range to block range-gate pulses until the selected count is reached. A pulse is also generated for external use in providing a delayed trigger to the range tracker.

Enable Count - This switch opens the count control gate in the absence of an internally generated pulse occurring at the end of the transfer count period and is used to check count-cycle operations.

Single Period, Multiple Period – In Single Period mode, the counter is reset after each counting period determined by the start count and stop count pulse. In Multiple Period, the counter is not reset until after a selected number of count cycles. The number of periods accumulated can be internally or externally controlled, depending on the position of the Sync RO and Async RO switch.

Normal Cycle, Delayed Cycle – In the Normal Cycle mode, the counter cycle operates independently from the time of occurrence of the data record trigger pulse. In the Delayed Cycle mode, the count value is held until the data record trigger pulse is received, at which time the count is transferred to the display register and a new count cycle is allowed to take place. The Delayed Cycle mode is used when the counter stop pulse is not synchronized to the data record trigger pulse. This nonsynchronous condition would occur if the counter is in the Test mode, or if the data-recording system is in any other but the PRF Trigger mode. Note: the normal cycle consists of uninterrupted signals generated in the sequence: (a) start count, (b) stop count, (c) reset display, (d) transfer count, (e) reset count, and (f) enable count. In Delayed Cycle, the sequence is interrupted after step (b) and proceeds only after receipt of a display trigger pulse from the data-recording system.

Synchronous Readout, Asynchronous Readout – In the Sync RO position the counter contents are transferred to the display register under control of the data-recording system trigger and EOS pulse. In the Async RO position the counter contents are transferred to the display register under control of internally generated trigger and EOS pulses. Data can be recorded by the recording system from the DRAMI in either mode, depending on relative trigger rates and how often the range data is to be sampled. If the data-recording system is triggered by the range-gate pulse and if no countdowns have been selected, the Sync RO and Async RO modes are virtually the same. If a data-recording-system trigger countdown is used, the range-data readout rate will be reduced accordingly in Sync RO.

Manual Reset Display – This switch clears the contents of the display register in addition to the automatic reset pulse. It can be used to check for continuity of data transfer from counter to register when it appears that the readout is unchanging.

Readout Countdown Selection – These are a group of six switches (located internally) to select divisions of the count recycling rate up to 63 to provide a reduction in rate of

transfer of data from counter to register. Multiple Period counting through the countdown interval is obtainable if this counting mode is chosen. The Readout Countdown Selection switches are used when the Sync RO-Async RO switch is in the Async RO position and when it is desired to read out data either slower or faster than the data-recording system trigger rate. In no case, however, can the readout rate be faster than the radar prf, or once every range-gate pulse.

Power On – This switch closes the +6 V, -6 V, -12 V and -28 V supply lines to the system.

Special Code Mark – The Special Code Mark (SCM) output is reset each time the readout (display) register is reset. The SCM output is turned on by the external EOS pulse. Hence, the SCM is recorded with the output data if the register has not been reset since the previous recording by the data system. The SCM output can also be activated manually by a panel pushbutton.

SCM 4, SCM 6 – This switch controls the readout of the Special Code Mark to the proper position, depending on whether the range data are recorded as a four-character or six-character channel. Four characters are generally used unless the accumulated-range count or extended-range count exceeds 6553 naut mi.

DETAILED CIRCUIT DESCRIPTION

Trigger Input Control

This section of the DRAMI contains the circuitry to select and condition signals for controlling the counter gating intervals and readout time. Refer to the top and left side of the functional block diagram, Fig. 15. The principal operator's control is the Automatic-Manual switch, of which there are four parts to handle four control pulse lines. These are (a) the start-count pulse, (b) the stop-count pulse, (c) data-readout pulse, and (d) the data EOS pulse. The sources for these control pulses are either externally or internally generated.

The start count pulse is initially derived from the transmitter trigger pulse in the Automatic mode. This pulse is fed to a level detector which delivers an output pulse which, due to the finite rise time of the input pulse, will be delayed with respect to the input. This pulse passes through the Auto-Man switch to the trigger delay selector (upper left corner of the functional block diagram). The automatic stop-count pulse may be derived in three ways. In one way the tracking range-gate pulse used after a standard output pulse is generated by a level-detector circuit. This pulse is passed if the Test-Operate selector is in Operate and Normal-Extended Range is in the Normal mode. The alternate positions of these controls furnish the other two sources for a stop-count pulse. In the Test mode the stop-count pulse occurs when the counter has reached a selected internal count, timing pulse 1, which has been predetermined by the operator. The event sequences are shown by the numbered timing pulses on the control-sequence timing diagram, Fig. 9. The third automatic stop-count signal is generated in the Extended Range mode by the first range-gate pulse after the selected count has been reached. Test-Operate must be in Operate to secure extended-range measurements. The extended-range hold gate to the Test-Operate selector is reset by a pretransfer pulse, timing pulse 9, from the sequence-control section of the counter.

The selected start- and stop-count pulses enter the trigger-delay circuitry, where either the start or the stop pulse may be delayed a controlled amount. If the stop pulse is passed to the adjustable delay, the start pulse is passed through undelayed. Once the delay has been set the desired amount, it may be used to introduce either positive or negative range corrections, depending on whether the start or stop pulse is delayed.

The Test mode is generally used for adjusting the delay to secure maximum time stability between the start and stop pulse. It should be noted that delaying the start pulse while in the Test mode produces no change in count reading, since the stop pulse always occurs a fixed time after the start-count pulse in this mode. The operator may also switch out the delay circuit so that both pulses are passed through undelayed.

Another feature of the trigger delay circuit is connected with the timing of data readout. Since the range-gate pulse is generally used to trigger a data scan in the data-recording system and is used as a stop-count pulse in the DRAMI, synchronism should be maintained for maximum counting and data-readout-availability time. Whenever the stop-count pulse is delayed, a corresponding delay is inserted in the trigger line from the data-recording system. If the start-count pulse is selected for delay or the delay is switched out, then the data-record trigger pulse is also passed undelayed.

Since the range-gate pulse is not the only source for stop-count pulses, and since the data-recording system may also be triggered by other means, the operator must decide when to use the delay in conjunction with the other triggering modes. The amount of the delay is adjustable inside the unit and may be verified by operating the Delay In-Out switch and observing the panel indicators while in the Test mode.

The start-count output pulse from the delay selector triggers the count on-off control to the On state, if the counter recycle sequence has been completed, as signified by the enable count, timing pulse 16, being On. The count control remains on until receipt of the stop pulse from the trigger-delay circuit. The count On time is used to actuate the counter input gate, and the count Off time is used in the counter recycle sequencer.

The stop pulse from the trigger-delay circuit is also fed to the readout control selector, where it is used as an internal trigger in the Async RO mode. In the Sync RO mode the data-recording system input trigger starts a controlled delay circuit to generate the readout trigger.

Another section of the readout control switch selects an EOS pulse from the data-recording system in the Sync RO position or an internally generated pulse from the readout countdown circuit in the Async RO mode. Both the selected readout trigger and EOS pulses are fed through separate sections of the Auto-Man control to the trigger hold circuit, timing pulse 6. The readout trigger is stored by trigger hold, if it occurs while the count On-Off control is in its Off state, signifying that a stop-count pulse has preceded the selected readout trigger. This condition is readily met in the Async RO mode, since the readout trigger is derived directly from the stop-count pulse internally. In Sync RO this condition is met only if the data-recording system is triggered by the range gate and if the Test-Operate selector is in Operate.

Either Normal or Extended-Range measurement is allowable, provided also that the data-recording system is triggered by the range gate. It is noted on the functional block diagram, Fig. 15, that the Test-Operate selector and the readout control have output control lines indicating Test mode and Sync RO mode. A combination of these two modes places the count-cycle selector in the Delayed-Cycle position, since the stop-count pulse and readout trigger would be totally unsynchronized under these conditions.

The selected EOS pulse may occur at any time with respect to the selected readout trigger and may occur at a lower frequency, depending on sampling rate used in the data-recording system (Sync RO) or the internally selected readout hold time (Async RO).

When the Auto-Man control is placed in the Manual mode, all of the required trigger pulses are generated by momentary pushbuttons on the panel. In this mode the Test-Operate, Normal-Extended Range, and a portion of the Sync-Async RO selectors are bypassed, although the start-stop trigger delay circuit is still operative. It is noted that in

this mode the undelayed start count also provides Manual EOS pulse and that Manual stop count also provides the readout trigger. All remaining positions of the DRAMI function the same whether in Automatic or Manual mode. The Manual mode is useful in checking counter operations, since all switching states are static after each start-stop count cycle.

The input timing frequency of 809.376 kc is derived from an external oscillator with stability of one part in 10^8. This signal is amplified and shaped to 30-percent-duty-cycle square waves within the counter input gate circuit.

Count Recycle Control Sequence

The control-sequence timing diagram, Fig. 9, is cross-referenced by numbers to indicate where the signals (waveforms) appear on the functional block diagram, Fig. 15. The timing relationships between the various counter recycling functions are based on the operating conditions as stated below. For the purposes of this discussion the following DRAMI panel switches are activated: (a) Binary Count, (b) Power On, (c) Normal Cycle, (d) Synchronous Readout, (e) Operate, (f) Extended Range, (g) Automatic, (h) Single Period, and (i) Delay In, (j) Delay Start, as shown in Fig. 18. The selected internal count switches are set for 512 naut mi. The data-recording system trigger countdown is set at 2:1, and the radar prf is 100 pps.

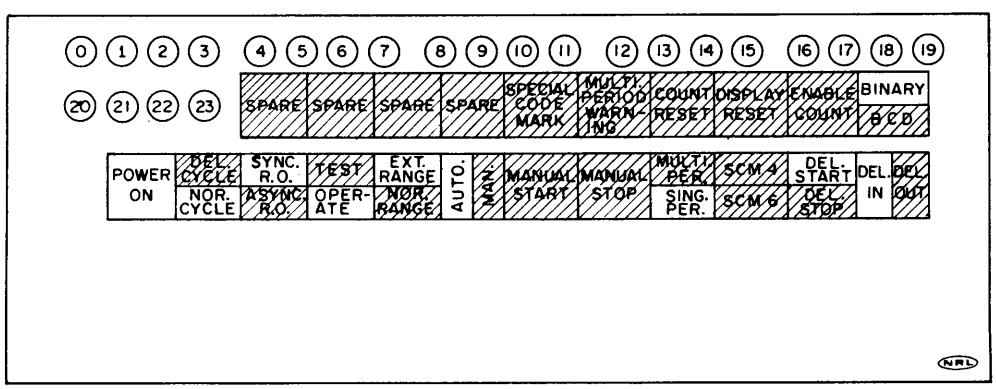

Fig. 18 - Control settings for text discussion

The sequence of operations starts with the completion of the selected internal count of 512 miles, timing pulse 1. The extended-range-hold gate, timing pulse 2, is turned on at this time, which allows the next input range-gate pulse to be gated through undelayed to the start-stop control to stop the count. The count had been running since the counter input gate was opened by a start-count-pulse input to the start-stop control. This pulse had been delayed with respect to the transmitter trigger pulse in the count trigger-delay circuit.

The synchronous readout pulse, timing pulse 5, is generated by the input data-record trigger pulse in the readout control circuit. This pulse occurs with every second range-gate pulse, since a 2:1 countdown was selected to give an effective data-record trigger and readout rate of 50 pps. The trailing edge of this pulse generates a trigger hold gate, timing pulse 6, that lasts until the data have been sampled by the data-recording system. This circuit is denoted by trigger hold on the detailed functional block diagram, Fig. 15.

A 20-microsecond reset pulse, timing pulse 7, is generated by the four-pulse sequencer with the leading edge of the count-off period, timing pulse 9. This is the Normal input to count cycle selector from the start-stop control circuit and coincides with the stop-count pulse, timing pulse 3. Before the readout register can be reset, however, two other conditions must be satisfied: an EOS pulse, timing pulse 19, must have been received, and a readout trigger must have been received during the stop-count hold period. Both of these pulses are derived from the data-recording system in Sync RO. These conditions are signified by positive states of enable transfer, timing pulse 11, and trigger hold, timing pulse 6, respectively. It is noted that the frequency of these two signals is equal to 50 pps, whereas the frequency of the ungated reset pulse, timing pulse 7, is equal to the radar prf, or 100 pps. (If the range-channel input were subcommutated by the data-recording system, the frequency of the enable transfer signal would be less than trigger hold.) In this particular case a register-reset pulse, timing pulse 8, is gated through at a rate of 50 pps and applied to all 24 register stages and the code-mark generator as a 15-microsecond negative pulse.

The second pulse in the four-pulse sequence is generated by the trailing edge of the ungated 20-microsecond reset pulse and is designated as a pretransfer pulse, timing pulse 9. This pulse is 15 microseconds in duration and is used to reset the internal stop-count hold gate, timing pulse 3, with its leading edge and to trigger the transfer pulse generator, timing pulse 10, with its trailing edge. The frequency of this pulse is the same as that of the first pulse generated in the sequence, timing pulse 7. The same conditions for gating through the transfer count pulse, timing pulse 12, must exist as required for the register reset pulse; i.e., trigger hold and enable transfer must be in the positive state. Also there must be a reset-complete signal, timing pulse 21, from the register reset circuit. This signal insures that a transfer count pulse can not be generated without a prior reset pulse when operating in Normal Cycle.

Except for the 30-microsecond time period from the beginning of the gated reset register pulse, timing pulse 8, and the beginning of the gated transfer count, timing pulse 12, there is continuous data stored in the register, timing pulse 22. The transfer count pulse makes a parallel transfer of data from each stage of the counter to the corresponding stage of the register. It is also used as an enabling signal, timing pulse 14, for resetting the counter during Multiple Period count operation.

The trailing edge of the ungated transfer pulse is used to reset the enable transfer circuit to the zero state, timing pulse 11. This reset is generated for each stop-count pulse, which in this case is 100 pps. The trailing edge of this pulse, timing pulse 10, is further used as an input to the internal readout countdown circuit to generate EOS pulses which are used for readout control and Multiple Period counting in the Asynchronous Readout mode. This pulse also triggers the final pulse in the four-pulse sequence denoted as end transfer period, timing pulse 13.

In the Single Period count mode used in this particular case, the counter is reset, timing pulse 15, each time the end transfer period pulse is generated. This pulse always occurs at the rate of the stop-count pulse for Normal Cycle operation. With a readout countdown of 2:1, however, only every other generated count is transferred to the register. The timing pulses shown in the diagram thus represent the count-cycle period during which data are transferred. In Multiple Period counting, the count-reset pulse, timing pulse 15, would be withheld until enabled by the transfer-count pulse, timing pulse 17. The count-reset pulse then is generated by the positive states of enable count reset, timing pulse 14, and the fourth sequential pulse, timing pulse 13, in the period-counting selector circuit, and thus would occur at a 50-pps rate instead of 100 pps as for Single Period count. During the interval between count-reset pulses, the range measurements for two prf periods would be accumulated.

The trailing edge of end transfer period, timing pulse 13, sets enable count, timing pulse 16, to the positive state. This circuit had been reset to the zero state by the output of the start-stop control circuit at the beginning of the stop-count hold period, timing pulse 4. When the enable count is positive, a new count cycle will start with the next start-count input pulse from the count trigger delay circuit, timing pulse 17. The negative portion of enable count is thus equal to the sum of the pulse widths of the generated control pulses from the four-pulse sequencer, or about 65 microseconds. This is the counter dead zone, and no start-count pulse received during this time will take effect. Enable count, timing pulse 16, may also be activated by a panel pushbutton. Both the count On time output of start-stop control and enable count are required to turn On the counter input gate. The count-gate-period output of the counter input gate, timing pulse 18, shows the high-frequency 809-kc pulses as the shaded-in portion beneath a positive envelope. This signal is the complement of stop-count hold, timing pulse 4, except for the reference frequency pulses that enter the counter from the counter input gate.

The EOS pulse, timing pulse 19, is derived from the data-recording system when operating in the Sync RO mode. This pulse resets trigger hold and returns enable transfer to its positive state. No further data transfer from counter to register can take place until the next data-recording trigger pulse is received through the readout control circuit. The direct EOS pulse input from the data-recording system also sets the Special Code Mark (SCM), timing pulse 20, to its positive state. The SCM stays on until the register reset pulse, timing pulse 8, occurs. The SCM indicates, if On at the data-sampling time, that the readout register has not been reset, since its output was previously sampled. This condition would occur if the data-sampling rate were faster than the range-data generating rate. Since Sync RO has been chosen, there would be only one data transfer for each data-record trigger pulse (50 pps rate). However, the data could be sampled more than once during this trigger interval, in which case the redundant readings would be accompanied by Special Code Marks. Each count readout is stored continuously, except for the 30-microsecond time duration from the reset pulse to the count transfer pulse, timing pulse 12.

It is noted that these timing relationships between the stop-count pulse and enable count can hold true for modes of operation other than those originally stated. However, the relative frequency of some of the final gated output signals could vary in integral multiples, according to the ratio of frequencies of the four basic input pulses, start count, stop count, readout trigger, and EOS pulse.

It was assumed that the data-recording system is being triggered in the prf range gate mode. With the DRAMI Test-Operate switch in the Operate position, the stop-count pulse and the data-record trigger pulse are virtually coincident. If these basic operating conditions do not exist then the DRAMI should be placed in Delayed Cycle, or Asynchronous Readout.

In Delayed Cycle both the timing (phase) and frequency of the waveforms will be altered, in that the count cycle-recycle sequence is delayed until receipt of the data-recording trigger by the readout control circuit. In the special case where the readout control is in Synchronous Readout, and Test Operate is in Test Mode, the count-cycle select circuit is automatically placed in the Delayed Cycle position because of the non-synchronism between the data-recording trigger and the stop-count pulse.

Readout Countdown Control

When operating in Asynchronous Readout mode, the EOS pulse rate determines the readout countdown exclusively. This is because the readout trigger is derived directly from the stop-count pulse and hence has the same frequency. The EOS pulses may be generated internally, as any submultiple of the normal count recycle rate up to 63. For

a 100-pps count recycle rate, an internal readout countdown of 25 would display and read out data from every 25th counting period.

The input trigger for the internal readout countdown is the trailing edge of the third pulse from the four-pulse sequencer, timing pulse 10. Since this pulse is also used to time the count-transfer action, an EOS pulse can not be generated until after a count transfer has taken place. The countdown circuit consists of six binary counting stages with pickoff gates activated by six countdown selection switches. The counting circuit is automatically reset after the internal EOS pulse is generated.

Either Single or Multiple Period counts may be read out when using the readout countdown circuit. In Multiple Period mode the range-count values would be cumulative through the countdown interval that has been generated. Of course only the accumulated count is displayed and made available for recording. In Single Period counting, the first range count completed after the generation of the EOS pulse would be transferred to the readout register.

The internal countdown with Asynchronous Readout is used when data readout rates different from that used in the data-recording system are required. For example, if more than one reading of range is required per data frame, the Asynchronous Readout would be used with the internal countdown set to a value to give a readout rate faster than the frame rate in the data-recording system. Readout rates slower than the data-recording-system frame rate also require that the internal countdown circuit be used. There are other situations where the timing and frequency of the stop-count pulse and the data-recording system trigger are not compatible, which make the Asynchronous Readout mode and the internal countdown mandatory. This mode would also be used when driving low-speed digital recorders and displays independent of the data-recording system. Since most of these devices require a BCD input, the code-select switch should be placed in the BCD mode for this type of operation.

Binary-BCD Counting Modes

In the Binary mode the carry pulse from each group of four consecutive count stages to the next group of four is generated in multiples of 16 input pulses from the counter input gate. The panel count indicators and the output code from the 24 register stages then have straight binary weighting from 2^0 to 2^{23}. This mode is most often used while data are being recorded by the data-recording system. The internal bias count selection switches also carry straight binary weighting. These ten switches are connected to counter stages 10 through 19 respectively.

In the BCD mode the carry pulses from each group of four stages is generated in multiples of ten input pulses from the counter input gate. Each group of four stages then has decimal weighting factors, and the maximum count in each group of four stages becomes 9 instead of 15, as in the binary mode. The change in counting base is accomplished by enabling feedback gates to reset all four stages in a group with the receipt of the tenth pulse to a group. The reset is generated simultaneously with the carry pulse to the succeeding group. The ten bias-count selection switches assume the same weights as their corresponding counter stages. Counter stage and switch number 12, that carry a weight of 409.6 mi in the binary mode, assume a weight of 100.0 mi in the BCD counting mode.

Shifting from Binary to BCD mode therefore causes the bias-count hold gate to move closer in range to the start-count pulse. This fact should be observed when operating in Extended Range, and the internal-count selection switches should be changed accordingly. The delayed-trigger output to the range tracker of course also changes position as the counting-base mode is changed.

The BCD mode is used principally for reading out data to low-speed decimal displays and printers when operating with a readout countdown.

Start-Stop Count Delay

Either the start or the stop pulse inputs can be delayed to introduce range corrections, depending on the position of the start-stop delay switch. In order to set the delay to the desired amount, place the Test-Operate switch in the Test position. Select any convenient value for the internal stop count. Select Async RO and Single Period count. Set Delay In-Out switch to Delay Out and note that the display-register reading agrees with the value selected with the internal stop count switches, plus one or two counts.

Switch Delay selector switches to Delay In and Delay Stop. Adjust the internal delay to increase the display register readout the desired amount. The delay is adjustable up to 60 increments, or six nautical miles in range, which will accommodate any correction required due to the relative positions of the input triggers and the true target position. This correction can then be applied as a positive or negative offset to the count reading when the Test-Operate switch is placed in the Operate position. If the Delay selector is in Delay Stop, the range readings would be increased to produce a positive correction.

It should be noted that to operate with Sync RO, the range-gate pulse and the data-record trigger pulse must be coincident. No problem is encountered in using negative range correction (Delay Start), since only the start count pulse is involved, which does not have to be synchronized with any of the data-recording system triggers.

When using positive range delay (Delay Stop) with Sync RO, a delay control signal synchronized to the stop-count pulse delay is sent to the readout control circuit. This signal produces a delay in the trigger line from the data-recording system slightly longer than the delay in the stop count (range gate) line. The trailing edge of the output pulse, timing pulse 5, from the readout control is thus made to track with the stop-count delay if it is used.

A test of proper operation of the readout trigger delay circuit can be made by noting a difference in data readout rate between Sync RO and Async RO. A reduction in readout rate with Sync RO would indicate improper timing of the readout trigger and the delayed stop-count pulse. If this condition is noted, the count-cycle selector can be placed in the Delayed Cycle mode, in which case synchronism between stop count, timing pulse 3, and the readout pulse, timing pulse 5, does not have to be maintained. However, there would be up to a one-period delay in the reading out of data if the data-recording system trigger preceded the stop-count pulse.

Extended-Range Measurement

To measure ranges longer than the prf period or triggering interval, a hold gate is generated, timing pulse 2, to pass a selected range gate or stop-count pulse. The hold gate is generated at a time equivalent to the minimum expected range of a target during a run. The tracking interval can be delayed for arbitrary lengths of time; e.g., the tracking can begin at 600 mi and extend up to 800 mi beyond (for a prf of 100 pps) or 1400 mi without generating an ambiguous value when a new prf period was started at the 800-mi point.

The hold gate is generated from a selected state of the range counter, which then becomes the minimum allowable range count. The count continues until the first range-gate pulse beyond the selected or bias count. This bias count can be set to different values within the maximum range of the counter, so that the tracking interval can be delayed

many prf periods. In no case, however, can the range change during a run be greater than the interval of one prf period. However, the selected bias count can be increased progressively as the range changes more than one prf period since the previous bias-count setting. An output of the selected count hold gate is provided to furnish a delayed trigger input to the range tracker in the radar system. Also, other sources for generating the hold-gate pulse, timing pulse 2, can be accepted. For multiple-period counting, an externally generated delayed pulse for generating extended-range measurements is required.

It is noted that a new count cannot be transferred for readout until after the extended-range period. Therefore the countdown selected for the data-recording system trigger must be an integral multiple of the equivalent countdown caused by the extended-range hold gate in order to avoid recording redundant range readings or skipping other range readings.

Ambiguous DRAMI Mode Combinations

Operating the DRAMI simultaneously in Multiple Period count with Test or Extended Range modes will produce irregular counting periods. Hence there would be no correspondence between the Single Period count reading multiplied by the readout countdown ratio and the Multiple Period count reading. In the Normal Range mode rather than Extended Range, the number of periods counted is equal to the ratio of count cycles to data-readout cycles; i.e., four range measurements would be accumulated if a data-recording system countdown of 4:1 of the prf rate were used. However, if Test or Extended Range is used, the range measurements for the four periods would not necessarily be equal, even assuming no change in range-gate position.

The above condition occurs because with Multiple-Period counting, the counter is not reset after each count cycle. Since the bias-count reading would be equalled or exceeded after the first counting period, the selected count-hold gate would not be generated again until the counter stages from which the count is selected have all recycled to the positive state. The time of occurrence of this condition would depend on the initial states of the counter stage after each count cycle. The counts obtained for each succeeding count cycle could be more or less than the first count-period reading. Hence the total accumulated count would not be the product of the Single Period count and the trigger countdown ratio.

To operate in Extended Range with Multiple Period counting, the hold gate must be turned on from an external source instead of through the internally selected count. A Multiple Period warning light is activated when Test or Extended Range is used in combination with Multiple Period count as an operator aid.

The above mode combinations are the only ones that produce ambiguous readings when using Synchronous Readout. There are Synchronous Readout mode combinations possible that would slow down or stop the data-transfer rate from counter to register. Hence there would be an uncertainty as to the number of counting periods accumulated in Multiple Period count. An irregular readout rate would be produced if the data-recording system were not being triggered by the range-gate pulse. This situation can be observed by a long display time for the Special Code Mark indicator.

As a general rule, when the range-gate pulse is not triggering the data-recording system, the Delayed Cycle mode should be used with Synchronous Readout. In this case the number of periods counted would be solely determined by the ratio of the input data-recording system trigger and EOS pulse rates.

SUMMARY

A multiple-mode radar range digitizer was developed for the RCR data-acquisition system utilizing several unique features in conjunction with a basic gated-pulse counter-storage circuit. Direct range measurements are made in 0.1-naut mi increments within each radar prf period, and it is possible to compensate for various delays in the radar system. Unambiguous measurement of target range extending beyond the radar prf interval are obtained by selection of internally generated counts, in 100-mi-increments, up to a maximum of 100,000 naut mi.

The control functions are fully defined, and modes of operation are employed to illustrate the many features of this versatile instrument. For example, Mode I involves the use of the extended-range feature, while Mode II involves the use of the Multiple Period feature.

The DRAMI warrants a detailed description of the variety of functions available to the operator; such a detailed account appears as the final section of the report. It is noteworthy that the DRAMI has been in operation for more than two years at CBD and has given flawless and dependable service as part of the RCR complex.

This page intentionally left blank.

Security Classification

DOCUMENT CONTROL DATA - R & D

(Security classification of title, body of abstract and indexing annotation must be entered when the overall report is classified)

1. ORIGINATING ACTIVITY *(Corporate author)* Naval Research Laboratory Washington, D.C. 20390	2a. REPORT SECURITY CLASSIFICATION Unclassified 2b. GROUP —

3. REPORT TITLE

THE RANDLE CLIFF RADAR DIGITAL RANGE-MEASURING INSTRUMENT

4. DESCRIPTIVE NOTES *(Type of report and inclusive dates)*

A final report on one phase; work on other phases is continuing.

5. AUTHOR(S) *(First name, middle initial, last name)*

Phillip L. Watkins and Frank D. Clarke

6. REPORT DATE July 19, 1967	7a. TOTAL NO. OF PAGES 35	7b. NO. OF REFS None

8a. CONTRACT OR GRANT NO. NRL Problem R02-05 b. PROJECT NO. RF 001-02-41-4001 c. d.	9a. ORIGINATOR'S REPORT NUMBER(S) NRL Report 6572 9b. OTHER REPORT NO(S) *(Any other numbers that may be assigned this report)*

10. DISTRIBUTION STATEMENT

Distribution of this document is unlimited.

11. SUPPLEMENTARY NOTES	12. SPONSORING MILITARY ACTIVITY Department of the Navy (Office of Naval Research) Washington, D.C.

13. ABSTRACT

The Randle Cliff Radar (RCR) facility at the NRL Chesapeake Bay Division, which employs a 150-ft-diameter steerable antenna, uses digital data-acquisition techniques. In a complex of digital instrumentation, one instrument incorporates several noteworthy and unique features.

The Digital Range-Measuring Instrument (DRAMI) is a multiple-mode radar-range digitizer. Though basically a gated-pulse counter capable of continuous readout of range information in either binary or BCD form, the DRAMI is unique in that unambiguous target range measurements are obtainable to a maximum range of 100,000 naut mi (±0.1 naut mi), even though the target lies beyond a number of radar interpulse periods.

Another feature permits the accumulation, prior to readout, of several successive radar range values. The values are stored in the DRAMI register until a readout command is received, at which time display and recording are accomplished. Still another feature is the "Test" mode of operation, in which all commands are internally generated and the DRAMI is, in a sense, made to check itself. In the event of improper operation, several key signals can be manually generated from the front panel, thus permitting the operator to pinpoint technical difficulties.

(over)

DD FORM 1 NOV 65 1473 (PAGE 1)

S/N 0101-807-6801

Security Classification

14. KEY WORDS	LINK A ROLE	LINK A WT	LINK B ROLE	LINK B WT	LINK C ROLE	LINK C WT
Radar						
Range measurement						
Digitizer						
Data acquisition						
Extended range mode						
Binary/BCD counter						

The DRAMI is a versatile, reliable, and accurate device. It was specifically developed for use with the RCR system in order to facilitate range studies of fast-moving or distant targets. However, the principles of its operation can be applied to meet the needs of any radar system.